J. SNOWDEN BELL

Locomotive Dictionary

J. Snowden Bell

1916 (Fourth) Edition

Jan. 1929

Definitions and Illustrations of American Locomotives, Their Parts and Equipment, Together with Typical Illustrations of Machine Tools and Devices Used in Their Maintenance and Repair

Compiled and Edited

for the

American Railway Master Mechanics' Association

By ROY V. WRIGHT, Managing Editor of the *Railway Age Gazette,* and Editor of the *Railway Mechanical Engineer,* assisted by GEORGE MITCHELL.

UNDER THE SUPERVISION OF THE FOLLOWING COMMITTEE

F. H. CLARK, *General Superintendent Motive Power, Baltimore & Ohio*
A. W. GIBBS, *Chief Mechanical Engineer, Pennsylvania Railroad*
WILLIAM SCHLAFGE, *General Mechanical Superintendent, Erie Railroad*

Published by Simmons-Boardman Publishing Company

Woolworth Bldg.
New York, N. Y.

Transportation Bldg.
Chicago, Ill.

Sole Selling Agents,
McGraw-Hill Book Company, Inc.

New York:
239 West 39th Street

London:
6 Bouverie Street, E. C.

Berlin:
31 Unter den Linden

Preface

Since the 1912 edition of the LOCOMOTIVE DICTIONARY was published, many changes have taken place in locomotive design and construction, and some entirely new types of locomotives have been developed.

Until a few years ago increase in capacity was obtained mainly by a proportionate increase in size without due consideration being given to those devices which are now known to be not only economical, but which are absolutely essential to the design of modern power. It is true that the superheater and mechanical stoker had gained considerable favor, the latter on very large locomotives; nevertheless, much remained to be done before it could be said that they were wholly satisfactory and their performance acceptable to the majority of mechanical department officers.

Of the new types of locomotives that have been developed the most notable for freight service is the Triplex (2-8-8-8-2) with three sets of coupled drivers, the third under the tender, and for passenger service the Reading (4-4-4) type, the new feature of which is a four-wheel trailing truck.

The most attention, however, has been paid to refinement of design, and this, together with the use of special alloy steel, has resulted in the reduction of weights of the rods and reciprocating parts, thus permitting a lighter counterbalance on the drivers and a consequent increase in the allowable wheel load to a degree deemed inadvisable a few years ago. As a result, Atlantic type locomotives have been built with sufficient tractive effort and boiler capacity to handle trains successfully on schedules that formerly required double heading, and the new Reading type with only two pairs of drivers is as powerful as the average Pacific at the time the 1912 edition of the Dictionary was published.

To cover the remarkable advance that has taken place in the last three years, it has been necessary to thoroughly revise the old Dictionary, and this, the 1916 edition, not only brings up to date and shows the most recent developments in locomotive construction, but also contains entirely new sections devoted to pulverized fuel, gasolene locomotives, systems of combustion and many details and appurtenances until recently practically unknown. The sections covering superheaters, mechanical stokers, valve gears, fireboxes, brick arches, coal pushers and oil-burning locomotives have been greatly enlarged and contain new material which represents the best practice.

No effort has been spared to make this work set forth as clearly and completely as possible all that is latest in American locomotive design.

New York, January, 1916.

SMITHSONIAN INSTITUTION
JUN 11 1948
NATIONAL MUSEUM

To the Users of this Dictionary

It has been pointed out by the users of this work that if some way could be found to amplify the information given in the Illustrated Section respecting the various locomotives, devices, and other products, it would be extremely helpful.

The very nature of the book, covering as it does every known and available device helpful to locomotive building and maintenance, makes an unusually large volume. It is, therefore, absolutely necessary to restrict the type matter to captions.

Many of the devices are, however, described in greater detail in the Catalogue and Advertising Sections which begin on page 909. The Catalogue Section, in particular, goes systematically into a serious attempt to give briefly the construction, utility, advantages, and savings to be derived from the use of certain articles.

The Alphabetical Index, giving the names of the companies so listed (page 963); the Buyers' Classified Directory, giving the different products mentioned (page 964); and the Trade Name Index, giving the name by which a product is usually distinguished (page 971), will all be found of practical help by those who make full use of this work.

Copyright
Simmons-Boardman Publishing Company
1916

A DICTIONARY OF THE
LOCOMOTIVE

A

Accident Reports. See Boiler Inspection.

Acetylene Headlight. Figs. 1683-1688. A headlight in which acetylene is used.

Adjusting Spring (Trailing Truck). Fig. 1011; Fig. 1016. A heavy spiral spring or nest of springs used for controlling the side motion of a two-wheel radial trailing truck. Also called centering spring.

Also used for moving four-wheel trucks back to the central position when they have been displaced by passage over a curve.

Used to bring the coupler or drawbar back to central position after passing over a curve.

Used to bring the boiler to a central position on Mallet locomotives.

Used on a brake head to hold the brake shoe in proper position. See Brake Head Adjusting Spring.

Adjusting Spring Case. 286, Figs. 101-140. 21, Figs. 1014-1020; Fig. 1017. A cylindrical cast iron or steel holder in which an adjusting spring is placed. Also called centering spring cylinder.

Adjusting Spring Seat. 22, Figs. 1014-1020. A casting, or a part of the bolster of a two-wheel trailing truck, forming a bearing for the end of the adjusting spring.

Admission. The opening of a steam port to admit steam to one end of a cylinder. If the valve has no lead, admission takes place at the moment the piston reaches the end of its stroke and just as it is to begin the return stroke. See Pre-Admission.

Air Brake. Figs. 1399-1553. Any brake operated by air pressure, but usually restricted to systems of continuous brakes operated by compressed air, in distinction from Vacuum Brakes, which are operated by creating a vacuum. The air is compressed by some form of steam pump on the locomotive, or a motor-compressor on electric locomotives, and is conveyed by pipes and flexible hose between the engine, tender and cars to cylinders and pistons under the tender and each car, by which the pressure is transmitted to the brake levers, and thence to the brake shoes. This system is what is now termed the straight-air brake. This brake is now obsolete in steam road practice, having been replaced by the Automatic Air Brake.

Air Brake (Standards). The following standards have been generally adopted:

1. Maximum brake-pipe pressure 70 lbs. for ordinary service, 90 lbs. for double pressure control freight service, and 110 lbs. for high-speed brake service.

2. Maximum braking power for locomotives should be as follows: 75 per cent. of weight on drivers, engine in working order, for driver brakes; 60 per cent. of weight on drivers with the No. 6 ET equipment; 60 per cent. of weight on truck and trailer wheel brakes: 45 per cent. with No. 6 ET (D-2) equipment, and 100 per cent. of the light weight of the tender for tender brakes, 85 per cent. with quick action triple valve and 80 per cent. with No. 6 ET equipment.

3. For electric locomotives, the maximum braking power should be 100 per cent. of the weight on axles driven by motors, and 90 per cent. on free axles.

For tenders the M. C. B. Standards relating to brake levers, jaws or clevises, rods and brake beam levers, location of angle cock, etc., are commonly adopted.

Air Brake and Train Air Signal Instructions. A code of instructions recommended by the American Railway Master Mechanics' Association for the guidance of train and locomotive men in the manipulation of air brake and air signal apparatus. The rules, as revised in 1914, are as follows:

A.—General Instructions.

1. The following rules and instructions are issued for the government of all employees of this railroad whose duties bring them in contact with the maintenance or operation of the air brake and train air signal. They must be obeyed in all respects, as employees will be held responsible for the observance of same as strictly as for the performance of any other duty.

Every employee whose duties are connected in any way with the operation of the air brake will be examined from time to time as to his qualifications for such duties by the Inspector of Air Brakes or other person appointed by the proper authority, and a record will be kept of such examination.

Any employee whose work indicates an apparent lack of the requisite brake knowledge will be required to pass an examination at any time following such indications.

B.—Instructions to Enginemen.

2. Enginemen when taking charge of locomotives must see that the air brake and train air signal apparatus on engine and tender is in good working order and that the air compressor and lubricator work properly; that the devices used for regulating all pressures are adjusted at the authorized amount; that brake valves work properly in all positions; and that, when brakes are fully applied, with cam type of driver brake, the pistons do not travel less than 2 in., nor more than 3½ in., and with other forms of driver brakes from 4 to 6 in.; that the engine truck and trailer brake piston travel be not less than 4 nor more than 6 in.; that the tender brake piston does not travel less than 6 nor more than 8 in.

Enginemen must report to roundhouse foremen, in writing, at the end of the run, any defects in the air brake or train air signal apparatus.

3. Making up trains. Testing brakes at terminal points and before starting down such grades as may be designated by special instructions.

—The brake pipe on the engine and under the tender must always be blown out and maximum pressure obtained in main reservoir before coupling engine to train.

After the train has been coupled, stretched and fully charged, the engineman shall, at the request of the inspector or trainmen, apply the brakes with full service application and hold them so applied until all brakes operated from the engine have been inspected and the signal given to release. The engineman must then release the brakes and he must not leave the station until it has been ascertained that all brakes are released and he has been so informed by the inspector, or the trainmen, of the number of brakes in service and of their condition. If any defect is discovered during this test same must be corrected and brakes again tested, and the operation repeated until the brakes are known to be in good condition.

In testing passenger train brakes, signal for releasing must be given from the air signal discharge valve on rear car.

Following the separation of couplings for local switching, or when engine is parted from train, or train has been parted for any purpose, the above test need not be complied with further than to ascertain by test that the rear brakes are responsive to brake valve on engine and that all brakes have properly released. However, when cars are added to train, the brakes on such cars must be inspected as in terminal test. When a back-up hose is to be used to control the train, the brakes must be applied for test with the back-up hose, and released from the brake valve on the engine.

4. Service application — passenger trains. — In making service stops from high speed, two applications should be used. The first application should be derived from two or more brake-pipe reductions, and when the speed has reduced to about fifteen miles per hour, release all brakes, and complete the stop with a moderate service application.

In making service stops with trains of less than seven cars, the brakes should be released about the time the drivers make the last revolution, except on heavy grades. Even on moderate grades and when stopping at water stations, coaling chutes, short platforms, etc., this should be done, and after releasing reapply the brakes, either automatic or independent, as required, to prevent the train from starting. To avoid shocks and train parting the brakes must not be released on trains of seven or more cars while moving at a speed of less than ten miles per hour.

If *undesired quick action* has taken place during a service application on trains of more than five cars, the brakes must not be released until the train comes to a stop.

5. Service application — freight trains. — In applying the brakes to steady the train on descending grades, or for reducing speed for any purpose, an initial brake-pipe reduction of not less than 7 lb. must be made. Releasing brakes at low speeds must not be attempted unless local conditions are favorable for same.

Ample time should always be allowed for making the stop, first permitting the slack of train to become adjusted before commencing to use the brake. After this the first brake-pipe reduction should be made and it should be sufficiently heavy to make the stop, being not less than 7 or more than 12 lb., according to the length of the train. Then when not more than a car length (40 ft.) short of the completion of the stop, a second reduction sufficiently heavy should be made to cause the brake valve to be blowing when stop is completed. After a reduction to apply brakes, no attempt must be made to release, until air ceases to discharge from the brake-valve pipe exhaust.

When backing freight trains and it is desired to stop, apply the brake in service, and when conditions permit, keep the driver brake from applying and the throttle open until stop is complete, the idea of keeping the engine brake released and using steam while train brake is applying being to keep the slack of train bunched and thus prevent train parting.

6. Emergency application.—The emergency application of the brakes must be used only in actual emergencies. Under such conditions the brake valve must be left in emergency position until train has come to a stop.

ENGINEMEN'S STRAIGHT AIR OR INDEPENDENT BRAKE VALVES.

(A) Always keep both brakes cut in and ready for operation, unless failure of some part requires cutting out.

(B) Always carry an excess pressure of 20 lb., or more, in the main reservoir, as this is necessary to insure a uniformly satisfactory operation.

(C) The straight air or the independent brake valve should not be used for bunching the slack of the train previous to an automatic application; neither should it be used alone for making ordinary stops with a train.

(D) The reducing valves for the straight air and the independent brake and the safety valves for the locomotive brakes should be kept adjusted at the authorized pressures.

When a full application of the straight air or of the independent brake causes any of the safety valves to operate, it indicates that same is out of order, or too high adjustment of the reducing valve or too low adjustment of the safety valve, or leakage of same. Have them tested and adjusted.

7. Brakes applied from an unknown cause.—If it is found that the train is dragging as though the brakes were applied, without rapid falling of the brake-pipe pressure pointer, the engineman must make an effort to release the brakes, which may be done as follows: First, if brake-pipe pressure is less than the authorized amount and the required excess pressure is carried in the main reservoir, move the handle of the brake valve to release position for an instant and then return it to running position; second, should the brake pipe be fully charged with pressure, apply the brakes with a heavy service reduction, and release them in the usual way. In case the brakes can not be released in this manner, the train must be stopped and the trainmen notified.

If, however, the brakes go on suddenly with a rapid fall of brake-pipe pressure, it is evidence that (A) a conductor's valve has been opened, (B) a hose has burst or other serious leak has occurred, or (C) the train has parted. In such an event the engine throttle should be closed and the brake-valve handle immediately placed in lap or in emergency position, to prevent the escape of air from the main reservoir, and left there until the train has stopped and the signal to release has been given.

8. Braking by hand.—Hand brakes must not be used, except in emergency.

9. Cutting out brakes.—*The engine and tender brakes must always be used automatically at every application of the train brake,* unless defective, except upon such grades as shall be designated by special instructions.

When necessary to cut out either the engine or the tender brake, it shall be done by closing the cut-out cock, located between the brake pipe and triple valve, and opening the drain cock in the auxiliary reservoir, on locomotives so equipped. On locomotives having the ET or the LT equipment close the cut-out cock in the pipe leading to the respective brake cylinder.

10. Double headers.—When two or more engines are coupled in the same train, the brakes must be connected through to and operated from the leading engine. Engineman of each engine, except the leading one, must close the double-heading cock below the automatic brake valve and carry the handle of brake valve in running position. He will run the compressor for the purpose of maintaining pressure on his engine, and of enabling him to assume charge of the train brakes should occasion require.

11. Dead engine feature.—Its purpose is to supply to the main reservoir for operating brakes and other devices on engines where pump has failed, or on dead engines en route. In both cases the cut-off cock in this device must be kept open and handle of both brake valves on such engines left in running position, and the double heading cock below automatic brake valve kept closed.

The dead engine cut-out cock must be kept closed on all engines where pumps are running.

C.—Instructions to Trainmen.

12. Making up trains and testing air brakes.—After the locomotive has been coupled to the train, or after two sections have been coupled together, the brake and signal couplings must be united, the cocks in the brake and signal pipes must all be open, except those at the rear end of the last car, which must be closed, and the hose hung up in the dummy couplings.

After the train has been coupled, stretched and fully charged, the engineman must be requested to apply the brakes. When he has done so, the brakes of each car must be examined to see if they are properly applied. When it has been ascertained that each brake has been so applied, the engineman should be signaled to release.

In testing passenger-train brakes the train air signal whistle code for releasing must be used, and the signals to release must be given from the air signal apparatus on the rear car. The brakes of each car must then be examined to see that each is released, and the engineman informed as to the number of brakes in service and of their condition.

If any defect is discovered it must be remedied and the brakes tested again—the operation being repeated until it is ascertained that everything is right. The conductor and engineman must then be notified that the brakes are all right. Following the separation of couplings for local switching or when engine or train has been parted for any purpose, the above test need not be complied with other than to ascertain, by test, that the rear brakes are responsive to brake valve on engine, and that all brakes have properly released.

No passenger train must be started out from its terminal with the brakes upon any car cut out or in a defective condition. The air brakes must be relied upon to control all trains.

13. Detaching locomotive or cars.—First close the cocks in the brake and signal pipes at the point of separation, and then part the couplings by hand.

Couplings frozen.—If the couplings are found to be frozen together or covered with ice, the ice must first be removed and then the couplings thawed to prevent injury to the gaskets.

14. Brake sticking.—If brakes are found sticking, the signal for "brake sticking" must be given, in which case, if the brakes can not be released from the engine, or if the brakes are applied to detached cars, the release may be effected by opening the release valve in the auxiliary reservoir until the air begins to release through the triple valve, when the valve must be closed.

15. Train breaking in two or more parts.—First close the cock in the brake pipe at the rear of the first section, and then signal the engineman to release the brakes. Having coupled the second section, observe the rules for making up trains—first being sure that the cock in the brake pipe at the rear of second section has been closed, if the train has broken in more than two sections. When the engineman has released the brakes on the second section, the same method must be employed with reference to the third section, and so on. When the train has been once more entirely united the brakes must be inspected on each car to see that all are released before proceeding.

16. Cutting out the brakes on a car.—When necessary to cut out the brake upon any car, close the cut-out cock in the cross-over pipe near the triple valve, and open the drain cock in the auxiliary reservoir, leaving it open on passenger cars.

On freight cars the release valve must be held open until all of the air has escaped from the reservoir, when an air-brake defect card must be applied. The conductor must notify the engineman of brake cut-out.

17. Conductor's valve.—Should it become necessary to apply the brakes from the train, it may be done by opening the conductor's valve in any car so equipped. *The valve must be held open until the train comes to a stop, and then must be closed.*

This method of stopping the train must not be used except in case of emergency.

18. Burst hose.—In the event of the bursting of a brake hose, it must be replaced and the brakes tested before proceeding, so as to ascertain that the rear brakes are responsive to the brake valve on engine. At least one extra air-brake hose complete should be carried by all crews, and in addition one extra signal hose complete carried by passenger crews.

19. Brakes not in use.—When the air brakes are not in use, the hose should be kept coupled between the cars or hung to the dummy couplings when cars are so equipped.

20. Pressure retaining valve.—When this valve is to be used, the trainmen must, at the top of the grade, at the point authorized, test the brakes upon the whole train, and must then pass over the train and turn the handles of the pressure-retaining valves upon all or upon a part of the cars, as may be directed, to proper position for retaining

pressure. At the foot of the grade, the handles must be turned downward (lengthwise with pipe) again. Special instructions will be issued as to the grades upon which these valves are to be used.

21. Train air signal.—In making up trains, all couplings and car discharge valves on the cars must be examined to see if they are tight. Should the car discharge valve upon any car be found defective, it may be cut out by closing the cock in the branch pipe leading to it. The conductor must be notified when the signal has been cut out upon any car, and he must report the same for repairs.

In using the signal, pull down upon the cord during one full second for each intended blast of the signal whistle, and allow three seconds to elapse between the pulls.

22. Reporting defects to inspectors.—Any defect in either the air brake or the train air signal apparatus must be reported to the inspector on arrival at terminal; or, if the defect be a serious one in passenger service, it must be reported to the nearest inspector, and such defect must be remedied before the car proceeds.

D.—Instructions to Engine-House Foremen.

23. General.—It is the duty of the engine-house foreman to know that the air brake and train air signal equipment is properly inspected upon each locomotive after each run, and that necessary repairs are made before leaving the engine house. Air gages must be tested at least once every thirty days, and the date of testing shown.

24. Air compressors.—The air compressors must be tested for efficiency by orifice test, and their condition determined.

Compressors must be started slowly with drain cocks open, these cocks to be left open until compressor is free from all condensation. They must also be left open while compressor is not working.

25. Compressor governor.—The compressor governor should cut off the steam supply when the air pressure for which it is adjusted has been obtained, and promptly admit steam to the compressor when air pressure falls slightly below the authorized amount.

26. Brake valves.—These valves must be kept clean and be known to be in working order in all their positions before the engine leaves the engine house.

27. Adjustment of brakes.—Engine brake piston travel should not be less than 4 nor more than 6 in.; for tender brake not less than 6 nor more than 8 in. When cam driver brake is in use piston travel should be not less than 2 in. nor more than 3½ in., and care must be taken to adjust both cams alike, so that the point of contact of the cams will be in line with the piston rod; the brake shoes should be correctly adjusted at equal distances from the wheel at the top and bottom of the shoe and in line with the tires.

28. Brake cylinders and triple valves.—Engine and tender brake cylinders, plain triple valves and high-speed reducing valves should be cleaned, lubricated and tested at least once in six months; when locomotive is equipped with distributing valve or control valve, or the tender has a quick action triple valve, these parts should be cleaned and tested at least once in three months. Time and place of cleaning to be stenciled according to standard drawings.

29. Draining.—The main reservoir, and also the drain cup and dirt collector in the brake pipe under the tender, must be drained of any accumulation after each trip. The auxiliary reservoirs and triple valves must also be drained frequently, and daily in cold weather, and the brake pipe under the engine and tender blown out.

30 Train air signal.—The train air signal apparatus must be examined and tested, both at the front of engine and rear of tender, before every trip by means of a suitable appliance to which is attached an air gage for testing the pressure carried. It must be known that the whistle responds properly; also that the pressure-reducing valve maintains the authorized pressure.

E.—Instructions to Inspectors.

31. General.—It is the duty of all inspectors to see that the couplings, the pipe joints, the triple valves, the high-speed reducing valves, the conductor's valves, the air-signal valves, and all other parts of the brake and signal apparatus are in good order, of standard size for the car, and free from leaks. For this reason they must be tested under the full air pressure as used in service. No passenger train must be allowed to leave a terminal station with the brake upon any car cut out or in a defective condition.

If a defect is discovered in the brake apparatus of a freight car, which can not be held long enough to give time to correct such defect, the brake must be cut out and the car properly carded, to call the attention of the next inspector to the repairs required.

Special rules will specify the smallest proportion of the total number of freight cars, with the air brakes in good condition, which may be used in operating the train as an air-brake train.

32. Making up trains and testing brakes.—In making up trains, the couplings must be united and the cocks at the ends of the cars all opened, except at the rear end of the last car, where the cocks must be closed; the inspector must know that the air is passing through the pipes to the rear end, and the hose couplings at the rear are properly attached to the dummy couplings on cars so equipped.

After the train is stretched and fully charged, the engineman must be requested to apply the brakes. After the brakes are applied they must be examined upon each car to see that they have the proper piston travel. This having been ascertained, the inspector must signal the engineman to release the brakes.

In testing passenger-train brakes, the signal to release must be given from the discharge valve on the rear car. He must then again examine the brakes upon each car to note that all have released. If any defect is discovered, it must be corrected and the testing of the brakes repeated, until they are found to work properly. The inspector must then inform both the engineman and conductor of the number of cars with brakes in good order.

The examination must be repeated if any change is made in the makeup of the train before starting.

33. Cleaning cylinders, triple valves and slack

ADJUSTERS.—The brake cylinders and triple valves on freight equipment cars must be cleaned, lubricated and tested, at least once in twelve months, and the method of marking brake apparatus which has been cleaned, lubricated and tested, should be as shown in Rule No. 60, of M. C. B. Rules of Interchange.

On passenger cars, the cylinders, triple valves and slack adjusters must be cleaned and lubricated at least once in six months, and in case cars are equipped with high-speed brakes, the triple, high-speed valves and control valves must be cleaned at least once every three months, and date and place of last cleaning stenciled on these parts with white paint.

The triple valves and auxiliary reservoirs must be frequently drained, especially in cold weather, by removing the plug in the bottom of the triple valve and opening the drain cock in the bottom of reservoir.

34. ADJUSTMENT OF BRAKES. — The slack of the brake shoes must be taken up by means of the truck dead levers on cars having four-wheeled truck and at the turnbuckle nearest the center of the car on cars having six-wheeled trucks. In taking up such slack it must first be ascertained that the hand brakes are released, and the slack is all taken out of the upper connections, so that the truck levers do not go within one inch of the truck timber or other stop, when the piston of the brake cylinder is fully back at the release position.

When under a full application the brake piston travel is found to exceed 9 in. upon passenger or freight cars, the brake shoe slack must be taken up and adjustment so made that the piston shall travel not less than 6 in. In taking up the brake shoe slack it must never be taken up by means of the hand brakes. Where automatic slack adjusters are applied to any car, such adjuster must be fully released before the slack is taken up elsewhere, and where cars are equipped with double apparatus it must be seen that both slack adjusters are evenly adjusted.

35. BRAKING FORCE.—Where the cylinder lever has more than one hole at the outer end and different holes are for use upon cars of different weights, it must be carefully ascertained that the rods are connected to the proper holes, so that the correct braking force shall be exerted upon each car.

36. REPAIR PARTS.—Inspectors must keep constantly on hand for repairs supply of all parts of the brake and signal equipment that are likely to get out of order.

37. HANGING UP HOSE.—Inspectors must see that, when cars are being switched or while standing in the yard, the hose is coupled between the cars or properly secured in the dummy couplings, where cars are so equipped.

38. RESPONSIBILITY OF INSPECTORS.—Inspectors will be held strictly responsible for the good condition of all the brake and signal apparatus upon cars placed in trains at their stations; they will also make examinations of the brakes, and such repairs as may be required.

Air Brake Hose. Figs. 1472, 1523. Flexible tubes made of alternate layers of rubber and canvas by which the brake pipes under engines, tenders, and cars are connected together, and compressed air, which operates the brakes, conducted through the train. The hose is made with a coupling at each end of the engine tender, or car, so that it can readily be connected or disconnected. Also called air hose and brake hose. Flexible metallic hose is now being used to some extent. See ARMORED BRAKE HOSE.

Air Brake Hose Label. A mark attached and made a part of the hose used for air brake connections by which there is indicated the name of the road by which the hose was applied, the name of the manufacturer, and the date of application and removal.

Air Brake Inspection. See AIR BRAKE AND TRAIN AIR SIGNAL INSTRUCTIONS.

Air Brake Instructions. At the Master Mechanics' convention of 1899 the following resolution prevailed:

Resolved, That it is the sense of this convention that the time has not arrived when we can abandon instructions to those who use the air brakes, but that the time has arrived when we should perhaps take more care to instruct those who repair the brakes and keep them in order. (See page 71, report 1899.)

Air Brake, Testing. See AIR BRAKE AND TRAIN AIR SIGNAL INSTRUCTIONS.

Air Compressor. 104, Figs. 101-140; Figs. 1412-1414. A pump attached to a locomotive for compressing air. It consists of a steam and air cylinder, the pistons in which are connected to the same piston rod, so that the air piston is worked directly by the steam piston. Suitable valves are provided for admitting and exhausting the steam and air to and from the cylinders. The steam cylinder is supplied with steam through a pipe from the boiler, and in this pipe is a compressor governor, which is connected to the main reservoir in such a way that when a certain pressure of air is attained in the reservoir the governor closes the steam valve of the compressor. When the air pressure falls, the governor opens the steam valve and starts the compressor. The motion of the steam piston is reversed by a reversing valve on the cylinder top head, moved by a rod having a tappet on it which is raised by the reversing valve plate on the piston striking it. The reversing valve controls the admission of steam to the main valve which moves the main slide valve, which, in turn, admits steam to or exhausts it from either end of the cylinder. The steam cylinder exhaust goes through a pipe to the smokebox and stack. The air cylinder takes in air through a perforated metal inlet and through disk or poppet valves at each end, and discharges it through similar valves to the main reservoir. The air cylinder is cast with corrugations or ribs to give as large a radiating surface as possible because the rapid compression of air develops a large amount of heat in it which would be destructive to packing leathers and gaskets, and cause the deposit of moisture in parts of the brake system where it would give trouble by freezing. The term which is more commonly used for the air compressor on a locomotive is air pump. See below and MOTOR DRIVEN AIR COMPRESSOR, COMPOUND AIR COMPRESSOR, DUPLEX AIR COMPRESSOR, ELECTRIC COMPRESSOR GOVERNOR, GOVERNOR SYNCHRONIZING SYSTEM.

Air Compressor and Motor. Figs. 1456-1458. Fig. 2229. A machine for compressing air, mounted on an electric locomotive and consisting of air cylinders, the pistons of which are gear driven by an electric motor. Also called MOTOR-DRIVEN COMPRESSOR.

Air Compressor Bracket. 274, Figs. 101-140. Fig. 1420. An iron or steel casting secured to the boiler shell for holding the air compressor or pump.

Air Compressor Governor. See PUMP GOVERNOR.

Air Cylinder. (Air Compressor.) 5, Figs. 1413, 1414. A cylinder forming part of the air brake compressor, and having its piston fastened to the same rod to which the piston of the steam cylinder is fastened. It is furnished with air inlet and discharge valves at each end, communicating respectively with the air inlet and the discharge pipe.

Air Cylinder Bracket. A projecting piece of metal bolted to the frame of a locomotive or tender, to which the brake cylinder is attached. See BRAKE CYLINDER BRACKET, TRUCK BRAKE, TENDER BRAKE.

Air Cylinder Gasket. See GASKET.

Air Cylinder Oil Cup (Air Compressor). Fig. 1421. A small brass receptacle with a stop cock or faucet, screwed to the air cylinder of an air compressor, to hold a supply of lubricant for the air cylinder. See AUTOMATIC AIR CYLINDER OIL CUP.

Air Drum. See MAIN RESERVOIR.

Air Drum Head. The end of the air drum, to which the cylindrical body is riveted or welded.

Air Drum Saddle. A strip of iron fastened to the locomotive frame for supporting the air drum or drums when they are placed between the cylinder saddles and the guide yoke.

Air Gage (Air Brake). Figs. 1437-1440, 1536, 1538; Figs. 1612, 1613. A gage to register the pressure of air in the reservoirs, brake pipe or brake cylinders, similar to an ordinary steam pressure gage. They are made either with a single pointer, Fig. 1440, or with two pointers, Figs. 1437-1439, to indicate on one dial both the reservoir pressure and the brake pipe pressure. The latter type is called a DUPLEX AIR GAGE. See LOCOMOTIVE, INSPECTION and TESTING.

Air Gage Fitting. A pipe connection by means of which an air gage is connected to an engineer's brake valve in a locomotive cab.

Air Gage Stand. A bracket or support to hold an air gage.

Air Hose. See AIR BRAKE HOSE.

Air Inlet. An opening for the admission of air to an air compressor. The term includes both the air strainer and air pipe.

Air Pipe (Air Brake). More properly BRAKE PIPE. Often called train pipe.

Air Pipe Strainer (Air Brake). More properly BRAKE PIPE AIR STRAINER.

Air Piston (Air Brake). 8, Figs. 1413, 1414. The piston fitted to the air cylinder of a pump or compressor, and whose motion back and forth in the air cylinder draws in and compresses air and forces it, through suitable valves, to the main reservoir.

Air Piston Packing Rings (Air Compressor). The metal rings fitted to the air piston to make it air tight in the cylinder.

Air Pump. See AIR COMPRESSOR.

Air Pump Bracket. See AIR COMPRESSOR BRACKET.

Air Signal. See TRAIN AIR SIGNAL APPARATUS; also AIR BRAKE and TRAIN AIR SIGNAL INSTRUCTIONS.

Air Signal Reducing Valve. See REDUCING VALVE.

Air Strainer. Fig. 1469. See BRAKE PIPE AIR STRAINER.

Air Strainer and Check Valve (Train Air Signal System). A device which is essentially a combination of a strainer and a CHECK VALVE for use on locomotives equipped and the Westinghouse ET locomotive brake equipment. The strainer cleans the air supply to the train air signal system and the check valve prevents air flowing back from the signal pipe. The check valve end is connected with a special brass pipe union having a restricted passage for the air, which prevents the flow of air to the signal system from being sufficiently rapid to interfere with its proper operation.

Air Valve (Air Compressor). See DISCHARGE VALVE.

Air Whistle. Fig. 1480. A small whistle placed in the locomotive cab for giving signals to the engineman from any part of the train. Operated by an independent line of pipe supplied with air from the main reservoir of the air brake system. See TRAIN AIR SIGNAL APPARATUS.

A pneumatic signal whistle for electric locomotives.

Allen Valve. A slide valve made with a curved passage through it extending from near one edge of the face to the other. This passage conveys steam from either end of the steam chest to the steam port at the other end when the port is only slightly open, and thereby gives a higher initial pressure in the cylinder. The Allen-Richardson valve, Figs. 693-694, is a modification of the original Allen valve.

Alligator Crosshead. Figs. 842, 844, 845, 847. See CROSSHEAD.

Alligator Wrench. See WRENCH.

Alternating Current. An electric current whose manifestations cause it to appear to reverse its direction continuously and periodically. The induction produced by the variation of electric current permits a change of the electric pressure to a lower or higher voltage by means of a device called a TRANSFORMER, which see. See also DIRECT CURRENT.

Alternating Current—Direct Current Motor (Electric Locomotive). A motor wound with compensating field coils and supplied with a transformer, capable of operating with either alternating or direct current.

American Articulated Compound Locomotive. The steam at reduced pressure is admitted direct from the boiler to the low pressure cylinders by means of the intercepting valve located in the left high pressure cylinder saddle. This allows the locomotive to develop full tractive effort in starting trains. As soon as the driving wheels have made a few revolutions, and the low pressure cylinders have received their full supply of steam from the high pressure cylinders the intercepting valve automatically changes the locomotive from simple to compound by admitting the exhaust steam from the high pressure cylinders to the receiver from which the low pressure cylinders draw their supply. In changing from compound to simple when running, in order to increase the power of the locomotive, an emergency or high pressure exhaust valve enables live steam to be admitted directly to the low pressure cylinders. See MALLET ARTICULATED COMPOUND LOCOMOTIVE for further description.

American Railway Master Mechanics' Association Standards. See MASTER MECHANICS' STANDARDS.

American Type Locomotive (4-4-0). Figs. 2, 49-50, 118. The prevailing type of locomotive several years ago. One having a four-wheel front truck and two pairs of coupled driving wheels, but no trailing truck. Frequently called Eight-Wheel Locomotive. Now used

principally in light branch line and suburban passenger service, and for inspection purposes.

Ammeter (Electric Locomotive). An instrument used to indicate the amount of current, or number of amperes flowing in a circuit.

Ampere. The unit of electric current. It is 1-10 of the unit of current of the C. G. S. system, and is the practical equivalent of the unvarying current which, when passed through a solution of nitrate of silver in water in accordance with standard specifications, deposits silver at the rate of .001118 gramme per second.

Amperage. The amount of electric current flowing in a circuit, expressed in amperes.

Angle Cock (Air Brakes). Fig. 1463, 1532. A cock placed in the brake pipe under the rear of the tender and at each end of each car just in front of the hose connection. This cock must always be open except at the rear end of the last car, where it must always be closed to prevent escape of air from the brake pipe and applying the brakes.

Angle Cock Body. 2, Fig. 1463. See above. Usually made of cast iron, and bored out to receive the stem or key.

Angle Cock Handle. 6, Fig. 1463. A flat or half-round piece of iron, bent to conform to the shape of the angle cock and fastened to the end of the stem or key to open and close the cock.

Angle Cock Locking Arm. A device attached to the handle of an angle cock to prevent the accidental closing of the valve by jarring or otherwise. It consists of a hinged handle fitting down over a lug cast on the body of the cock to hold the handle in place when in the wide open position. The handle can then be moved to the closed position only by lifting it off the lug and turning it.

Angle Cock Stem. 3, Fig. 1463. A slightly conical plug, ground to fit the interior of the angle cock body, and having a rectangular opening through it so as to open communication between the two ends of the angle cock body. Also called a cock key.

Angle Cock Stem Nut. 4, Fig. 1463. A nut screwed on the lower end of the angle cock stem for the purpose of holding it in place by a washer which is thereby bound against the angle cock body with any desired degree of tightness. Called also a cap.

Angle Cock Stem Washer. A flat metal ring sometimes put in between the nut and body on the key of an angle cock. See above.

Angle Fitting (Air Brake). A special pipe elbow for use with brake and signal pipe hose couplings.

Angle Globe Valve. Fig. 1229. A Globe Valve, which see, having the inlet and outlet connections at an angle with each other, commonly 90 degrees.

Angle Iron or **Angle.** A general term applied by makers to iron or steel rolled in the form of an L, but with the corner rounded off somewhat. When the angle is rolled with a sharp interior corner and not rounded off, it is termed a square-root angle.

Angle Valve. See Angle Cock.

Anti-Friction Metal. A term applied to bearing metals having a low coefficient of friction, such as Babbitt Metal, which see, and other alloys of special composition which are used for bearings.

Anti-Friction Side Bearings. Devices to eliminate the friction between body and truck in curving. The two general forms are roler side bearings and ball-bearing side bearings. See Side Bearings.

Application Chamber Pipe (Air Brake). The pipe which connects the application chamber of the distributing valve with the automatic brake valve through the independent brake valve. See Distributing Valve.

Apprentice Rules. A series of basic principles recommended by the American Railway Master Mechanics' Association relating to the employment and handling of apprentices. They were adopted in 1908 and are as follows:

1. To develop from the ranks in the shortest possible time carefully selected young men for the purpose of supplying leading workmen for future needs, with the expectation that those capable of advancement will reveal their ability and take the places in the organization for which they are qualified.

2. A competent person must be given the responsibility of the apprenticeship scheme. He must be given adequate authority, and he must have sufficient attention from the head of the department. He should conduct thorough shop training of the apprentices, and in close connection therewith should develop a scheme of mental training, having necessary assistance in both. The mental training should be compulsory, and conducted during working hours at the expense of the company.

3. Apprentices should be accepted after careful examination by the apprentice instructor.

4. There should be a probationary period before apprentices are finally accepted; this period to apply to the apprentice term if the candidate is accepted. The scheme should provide for those candidates for apprenticeship who may be better prepared as to education and experience than is expected of the usual candidate.

5. Suitable records should be kept of the work and standing of apprentices.

6. Certificates or diplomas should be awarded to those successfully completing the apprentice course. The entire scheme should be planned and administered to give these diplomas the highest possible value.

7. Rewards in the form of additional education, both manual and mental, should be given apprentices of the highest standing.

8. It is of the greatest importance that those in charge of apprentices should be most carefully selected. They have the responsibility of preparing the men on whom the roads are to rely in the future. They must be men possessing the necessary ability, coupled with appreciation of their responsibility.

9. Interest in the scheme must begin at the top, and it must be enthusiastically supported by the management.

10. Apprenticeship should be considered as a recruiting system, and greatest care should be taken to retain graduated apprentices in the service of the company.

Apron. See Cab Apron.

Arbor. "A spindle or axle for a wheel or pinion; a mandrel on which a ring or wheel is turned in a lathe."—Knight.

Arc. The brilliant flash of light that occurs when a circuit carrying an electric current is opened or broken.

It is sometimes very destructive in its effects unless destroyed by a powerful magnetic field.

Arc Lamp. Figs. 1690, 1703. A device for producing illumination, wherein an electirc arc is maintained between the ends of two rods or pencils of carbon held by suitable mechanism at a distance of ⅛ to ⅜ inch apart. With an electric current of from 7 to 9 amperes at 45 volts maintained between the carbon points, an amount of energy equal to about ½ horsepower, a brilliant light is produced. The arc lamp is enclosed in the case of the headlight on the smokebox. See Electric Headlight.

Arch. A term sometimes applied to the Smokebox, which see. See also Brick Arch.

Arch (Elliptic Spring). The height from the center of the scrolls at the ends of the elliptics to the under side of the main leaf of the spring. Twice the arch of an elliptic spring, less the thickness of the spring bands, is the set, and is the maximum amount which an elliptic spring can be compressed. In a half-elliptic spring the arch and set differ only in the thickness of the spring band.

Arch Bar. 1, Figs. 1913-1920. A bent wrought iron or steel bar, which forms the top member of a diamond truck side frame. In the diamond truck the next lower member is the inverted arch bar, and the next lower (occasionally used) is the auxiliary arch bar. The tie bar comes under all, and sometimes becomes an arch bar.

Arch Bar Truck. See Diamond Truck.

Arch Brick. A unit refractory material used in the construction of brick arches.

Arched Roof. A cab roof, the surface of which is curved.

Arch Tube. 58, Figs. 152-186. An iron or steel tube placed in the firebox to support the brick arch. One end connects to the firebox throat sheet and the other to the door sheet at a point below the crown sheet. When a built-in combustion chamber is used the arch tube is curved and connects to the bottom sheet of the combustion chamber. For specificafitiofins see Tubes (Specifications and Tests).

Arch Tube Plug. 59, Figs. 152-186. A pipe plug for closing the holes, either in the boiler back head or throat sheet. opposite the ends of the arch tubes, and through which the arch tubes can be washed out.

Arm. A lever or handle. See Sand Box Arm, Reverse Shaft Arm.

Arm Rest. 275, Figs. 101-140. A wooden or metal bar or ledge attached to the side of a cab, usually upholstered, for the engineer or fireman to rest the arm upon.

Arm Rest Bracket. A shelf or bracket supporting the arm rest.

Armature (Electric Locomotive). 2, Fig. 2164; Fig. 2228. The rotating part of an electric motor, consisting of a laminated iron cylinder or core keyed to a shaft, and in the slots of which are wound the armature coils of insulated copper wire or ribbon. At one end of the core on the shaft is mounted the commutator, a copper cylinder composed of insulated segments, which are connected to corresponding armature coils.

Armature Key. A long, slender piece of steel driven in a longitudinal slot cut in a driving axle or in an armature shaft, to hold the armature firmly on the axle or shaft.

Armature Keyway. 3, Fig. 2152. A longitudinal slot cut in a driving axle or an armature shaft for the insertion of a key used to hold the armature fast.

Armature Quill. Fig. 2240. A sleeve or tube, surrounding a driving axle but not touching it, and having an armature attached to, or built around it. A circular enlargement on the outer end of the quill carries a number of short, stout pins that fit in cylindrical pockets in the inside hub of the driving wheel.

Armature Shaft. The shaft on which the armature of an electric motor is fastened. In the case of gearless motors, the locomotive driving wheels are keyed to this shaft or the armature shaft is connected to the driving wheels by rods and cranks; but if the motor transmits power to the driving axle through gears, a pinion is fastened on the armature shaft which engages a gear wheel on the main driving axle.

Armored Brake Hose. Fig. 2087. Brake hose, covered with a woven wire fabric, to protect it from injury or abrasion. Another form of armored brake hose is formed by winding a continuous wire spirally around it by a machine which makes the spiral slightly smaller than the tube, so that it grips tightly. Vacuum brake hose, for vacuum brakes, is usually lined with coiled wires on the inside to prevent collapsing, but such is not properly termed armored brake hose.

Articulated Locomotive. Figs. 75-92, 133-142. A locomotive having two sets of cylinders driving independent groups of wheels which support two sets of frames, joined by a hinge or pivot joint. The leading set of frames, cylinders and driving wheels support the forward end of the boiler and swivel radially about the pivot connection, giving the effect of a truck, and thus reducing the rigid wheelbase. See American, Baldwin and Mallet Articulated Locomotive.

Asbestos Felt. A preparation of asbestos in loose sheets, for use as a non-conductor of heat in the covering of steam pipes. It must be handled with care to prevent tearing.

Asbestos Insulating Cement. A patented formula composed chiefly of asbestos combined with plaster of paris, hydrates of lime and other binders. It is applied as plaster in place of other lagging.

Ash Pan. 109, Figs. 101-140; 1, Figs. 443-465; Figs. 460-479. A receptacle underneath the grate for holding the ashes that drop through the grate bars. In order to control the admission of air under the grate, it is provided with dampers at either end operated by rods and levers from the cab. The ashes are dumped from the bottom through one or more hoppers closed by hinged or sliding doors. See Locomotives, Inspection and Testing.

Ash Pan Angle. An angle iron hanger or support bolted to the lower rail of the frame or to the bottom of the firebox ring, to support the ash pan.

Ash Pan Axle Guard. A piece of sheet steel made fast underneath the ash pan and over or partly surrounding a driving axle for the purpose of protecting the axle from the excessive heat of the ash pan. Used on locomotives having one or more axles under the firebox.

Ash Pan Blower Valve. Fig. 1231. A valve for controlling the ash pan blower for removing ashes.

Ash Pan Damper. 2, Figs. 443-465. A door arranged to swing or slide through the operation of the damper rigging for the purpose of regulating the amount of air admitted under the grate bars.

Ash Pan Damper Crank. 164, Figs. 101-140. A bell crank transmitting the motion of an ash pan damper handle to a damper rod. In some designs, where dampers are arranged to slide vertically in ways or guides, two bell-cranks are used, one connecting the lower end of the damper handle to the damper rod, the other connecting the damper rod with the damper by an intermediate lever. The bell crank nearest the damper is provided with a counterweight to balance the weight of the damper.

Ash Pan Damper Crank Support. A casting secured to the ash pan or firebox to support the damper crank by a pin or short shaft.

Ash Pan Damper Handle. Fig. 479. An operating handle attached to the ash pan damper crank and with its upper end passing up through the deck within easy reach of the fireman.

Ash Pan Damper Hinge. The pivot or support on which the ash pan damper turns in opening or closing.

Ash Pan Damper Hinge Bearing. A lug on the ash pan to hold the hinge on which the damper is hung.

Ash Pan Damper Latch. A fastening device for holding an ash pan damper in any position. A catch consisting of a small lever is secured in the casting through which the ash pan damper handle passes, and drops a pin or detent into a notch in the edge of the ash pan damper handle.

Ash Pan Damper Lever. Fig. 479. A lever making connection between the damper rod and the damper.

Ash Pan Damper Lug. A projection cast on a damper for attaching the damper lever by pins.

Ash Pan Damper Rod. Fig. 479. A slender bar connecting the damper with the ash pan damper crank for opening and closing the damper.

Ash Pan Damper Rod Pin. A bolt to secure the damper rod at either end.

Ash Pan Damper Shaft. A transverse shaft with a bell crank attached, resting in bearings on a support or bracket, for operating an ash pan damper.

Ash Pan Damper Shaft Bearing. A bracket attached to the frame of the locomotive for holding the end of the ash pan damper shaft.

Ash Pan Drop Cross Brace. A transverse angle connecting the two sides of an ash pan hopper to strengthen it at the opening of the drop door or dump.

Ash Pan Drum. A hopper underneath an ash pan, used on some locomotives where the firebox is over one or more driving axles.

Ash Pan Dump. A door or slide that closes the bottom of an ash pan hopper, commonly called hopper slide or door.

Ash Pan Dump Connection. The rods and levers comprising the mechanism for operating a dumping ash pan.

Ash Pan Dump Connection Pins. Pins used in the ends of the rods and levers of the ash pan dump connection.

Ash Pan Dump Crank. A crank connecting the ash pan dump with an operating rod and handle.

Ash Pan Dump Crank Support. A bracket on which an ash pan dump crank is pivoted.

Ash Pan Dump Cylinder. 310, Figs. 101-140. A cylinder in which a piston and piston rod, operated by air from the main reservoir, pushes or pulls a rod connected to the ash pan dump crank and thus operates the ash pan hopper slide.

Ash Pan Dump Lever. Connected to the ash pan dump and operated by a rod.

Ash Pan Dump Plate. A steel plate or casting covering the opening in the bottom of an ash pan or ash pan hopper. Also called hopper slide or door.

Ash Pan Dump Shaft. Part of an ash pan dump rigging, and attached to the handle used to move the dump plates.

Ash Pan Dump Shaft Arm. Attached to an ash pan dump shaft for connection to the rod that operates the dump.

Ash Pan Dump Shaft Bearing. The bearing of the dump shaft in a bracket attached to the locomotive frame.

Ash Pan Dump Shaft Connection. The rods or bars by which an ash pan dump shaft is operated.

Ash Pan Dump Shaft Connection Rod. 4b, Figs. 443-465. A light bar connecting the lever on the dump shaft with a lever that moves the dump. Also called hopper slide rod.

Ash Pan Dump Shaft Handle. A handle for operating a dumping ash pan. Usually but not always arranged to be worked from the foot plate.

Ash Pan Dump Shaft Handle Catch. A fastener for securing the dump shaft handle in place.

Ash Pan Dump Shaft Handle Lock Pin. A detent for fastening the dump shaft handle catch in place.

Ash Pan Dump Valve. A valve controlling the admission of air to the ash pan dump cylinder.

Ash Pan Heater Valve. A globe valve attached to the boiler to supply steam to a set of pipes placed in an ash pan to prevent the accumulation of snow and ice, which would interfere with the operation of the dampers and dumps or hopper slides.

Ash Pan Hopper. 110, Figs. 101-140; 20, Figs. 443-465. A receptacle fastened underneath a grate to receive and retain the ashes that fall through. More commonly, simply ash pan. Usually made of cast iron or sheet steel plates.

Ash Pan Hopper Slide. 111, Figs. 101-140. 4, Figs. 443-465. A casting or plate, sliding in guides to close the bottom of an ash pan hopper.

Ash Pan Hopper Slide Guide. 4c, Figs. 443-465. Ways formed on the bottom of an ash pan hopper for holding the hopper slide or door.

Ash Pan Support. Figs. 470-475. Braces or hangers made either of castings or forgings and bolted to the firebox mud ring or locomotive frame for supporting the ash pan. Each support is named according to its location.

Ash Pan Wheel Pocket. That portion of an ash pan that is arched or bent up to pass over an axle.

Atlantic Type Locomotive (4-4-2). Figs. 2, 51-56, 119-122. A locomotive having a four-wheel front truck, two pairs of coupled driving wheels and a two-wheel trailing truck. Used for fast passenger service.

Automatic Air Brake. Figs. 1399-1553. One which is automatically applied by a rupture in the hose couplings or brake pipe, or by train separation, which causes a reduction in the brake pipe pressure. See High Speed Air Brake, Quick Action Air Brake.

Automatic and Straight Air Brake. See Combined Automatic and Straight Air Locomotive Brake.

Automatic Air Cylinder Oil Cup. Fig. 1421. An oil cup for automatically supplying a proper amount of lubrication to the air cylinder of an air compressor.

Automatic Connector (Steam and Air Pipes). Figs. 2094-2100. A device by means of which the steam, air brake and signal pipes between cars are automatically coupled by impact. It is usually supported by a hanger from the coupler, and springs back of the head keep the parts tight together. Allowance is made for vertical and lateral movement, and provision is made for interchange with cars not equipped with the device.

Automatic Reducing Valve (High-Speed Brake). Figs. 1452-1455. A valve attached to the brake cylinder to automatically bleed the pressure down to 60 lbs. after an emergency application, when the pressure in the cylinder rises to 85 lbs. or more. The triangular port gives a graduated reduction. It also prevents the brake cylinder pressure from exceeding 60 lbs. in a service application. The triangular port then gives a wide opening.

Automatic Slack Adjuster. Fig. 1561. A device connected to the foundation brake gear for automatically taking up the slack resulting from wear of the brake shoes and other parts.

Automatic Train Stop. Fig. 1477. A valve mechanism mounted on the car or locomotive, operated by a track trip and connected to the brake system so as to produce an automatic emergency application of the brakes at predetermined points when the conditons within any block are such as to forbid train movements into it.

Auxiliary Arch Bar. A wrought-iron bar sometimes used, which forms the lower member of a diamond truck side frame. See Arch Bar.

Auxiliary Dome. 102, Figs. 101-140. A dome placed on a boiler in addition to the regular dome and used for attaching the safety valves and whistle, as a Safety Valve Dome. Sometimes used to accomodate the throttle valve and placed ahead of the regular dome in order to do away with the inside dry pipe.

Auxiliary Exhaust Pipe Connection. Fig. 387. A pipe connecting the auxiliary or emergency exhaust pipe to the exhaust pipe combination and nozzle. Used on Mallet compound locomotives.

Auxiliary Exhaust Pipe Smokebox Connection. Fig. 392. A flange riveted to the smokebox shell and forming the connection between the outside auxiliary exhaust pipe from the high pressure cylinders and the exhaust pipe connection in the smokebox. Used on Mallet compound locomotives.

Auxiliary Reservoir (Air Brake). Figs. 1383, 1385, 1388. A cylindrical reservoir made of steel tubing, attached to some part of a locomotive and to the under side of the tender by hangers or bands. The reservoir serves to hold a supply of compressed air to operate the brakes of the driving or truck wheels, and of the tender, and is supplied from the main reservoir on the engine through the brake pipe and triple valve. See Reservoir.

Auxiliary Reservoir Bleed Cock (Air Brake). A faucet or cock for emptying the reservoir of any water condensed from the compressed air. More commonly Reservoir Drain Cock.

Auxiliary Reservoir Nipple (Air Brake). See Triple Valve Nipple.

Auxiliary Reverse Lever. See Power Reverse Lever.

Auxiliary Steam Pipe. 43, Figs. 317-319. A pipe through which steam is admitted, at a reduced pressure, directly to the low pressure cylinders of a compound locomotive when the maximum tractive effort is required.

Axle. 23 and 72, Figs. 101-140; 2, Figs. 976-987. A shaft made of wrought iron or steel to which a pair of wheels is attached by pressing on in a hydraulic wheel press. This method suffices for tender and engine truck wheels. Locomotive driving wheels are keyed on in addition. Axles are distinguished according to their use as driving, front truck, trailing truck and tender axles, and according to the method of manufacture, as hammered, fagoted, muck bar axles, etc. The A. R. M. M. A. Standard truck axles are shown in Fig. 2242. See Crank Axle, Driving Axle, Tender Axle. See Axle, Tender (Specifications and Tests). See Rule 33, Locomotives, Inspection and Testing. See Forgings.

Axle (A. R. M. M. A. Standards.) Fig. 2242.

At the convention of 1879 the Master Car Builders' standard axle with 3¾ by 7-inch journals was adopted as standard. Changed to Recommended Practice in 1891. Modified to conform to M. C. B. standard 1903. and adopted as standard. Modified in 1908 to conform to M. C. B. standard.

At the convention of 1890 the Master Car Builders' standard axle with journals 4¼ by 8 in. was adopted as standard. Changed to Recommended Practice in 1891. Modified to conform to M. C. B. standard in 1903 and adopted as standard. Revised 1908.

At the convention of 1903 the Master Car Builders' standard axle with 5 by 9-inch journals was adopted as standard.

At the convention of 1903 the Master Car Builders' standard axle with journals 5½ by 10-inch was made a standard.

In 1913 the M. C. B. standard axle with 6 in. x 11-in. journals was adopted as standard.

In 1908 these standard axles were made to conform to the M. C. B. standard.

Axle, Tender (Specifications and Tests).—In 1915 the American Railway Master Mechanics' Association adopted as standard the following specifications for steel axles for locomotive tenders:

I. MANUFACTURE.

1. *Process.*—The steel shall be made by the open-hearth process.

II. CHEMICAL PROPERTIES AND TESTS.

2. *Chemical Composition.*—The steel shall conform to the following requirements as to chemical composition:

Carbon	0.38—0.52 per cent
Manganese	0.40—0.60 per cent
Phosphorus, not over	0.05 per cent
Sulphur, not over	0.05 per cent

3. *Ladle Analysis.*—An analysis shall be made by the manufacturer from a test ingot taken during the pouring of each melt, to determine the percentage of carbon, manganese, phophorus, sulphur and silicon. Drillings for analysis shall be taken not less than ¼ in. beneath the surface of the test ingot. A copy of this analysis shall be given the purchaser or his representative. This analysis shall conform to the requirements specified in Section 2.

4. *Check Analysis.*—A check analysis shall be made from the finished material representing each melt, by the purchaser or his representative, and shall meet the requirements specified in Section 2.

III. PHYSICAL PROPERTIES AND TESTS.

5. *Drop Tests.*—The axles shall conform to the following drop-test requirements:

(a) The test axle shall be so placed on the supports that the tup will strike it midway between the ends. It shall be turned over after the first and third blows, and when required after the fifth blow. When tested in accordance with following conditions, the axle shall stand the specified number of blows without fracture, and the deflection after the first blow shall not exceed that specified in the following table:

SIZE OF AXLE, IN		Capacity of Axle, Lb.	Distance between Supports Ft.	WEIGHT OF TUP, LB.					
				1 640			2·200		
Journal.	Diam. at Center.			Height of Drop, Ft.	Number of Blows.	Max. Deflection, In.	Height of Drop, Ft.	Number of Blows.	Max. Deflection, In.
4¼ by 8	4¾	22 000	3	34	5	7½	.....	.....	.....
5 by 9	5⅜	31 000	3	43	5	6¼	.....	.....	.....
5½ by 10	5⅞	38 000	3	43	7	4½	.....	.....	.....
6 by 11	6 7/16	50 000	3	.....	.....	.....	40	7	5¼

(b) The deflection is the difference between the distance from a straight-edge to the middle point of the axle, measured before the first blow, and the distance measured in the same manner after the blow. The straight-edge shall rest only on the collars or the ends of the axle.

6. *Drop-Test Machine.*—The anvil of the drop-test machine shall be supported on 12 springs, as shown on the M. C. B. drawings, and shall be free to move in a vertical direction, and shall weigh 17,500 lbs. The radii of the striking face of the tup and of the supports shall be 5 in.

7. *Number of Tests.*—(a) One drop test shall be made from each melt. Unless otherwise specified, not less than 30 axles shall be offered from any one melt.

(b) If the test axle passes the physical test, the inspector shall draw a straight line 10 in. long parallel with the axis of the axle, and starting with one end of it he shall prick-punch this line at several points. A piece 6 in. long shall be cut off from this same axle so as to leave some prick-punch marks on each piece of axle. Drillings for chemical analysis shall be taken by using a ⅝-in. drill and drilling in the cut-off end 50 per cent of the distance from the center to the circumference and parallel with the axis of the axle.

IV. WORKMANSHIP AND FINISH.

8. *Workmanship.*—All axles shall be made and finished in a workmanlike manner and all journals and wheel seats shall be rough-turned. In centering, unless otherwise specified, 60 deg. centers shall be used, with large diameter of counter-sinking not less than ⅞ in., and with clearance drilled ½ in. deep.

9. *Finish.*—The axles shall be free from injurious defects and shall have a workmanlike finish.

V. PERMISSIBLE VARIATIONS AND WEIGHTS.

10. *Permissible Variation.*—The axle shall conform in size and shape to the standard M. M. drawings (see Sheet No. 1). Length shall not be less than shown and not more than 3/32 in. over.

VI. MARKING AND STORING.

11. *Marking.*—The manufacturer's name or brand, melt number and month and year when made shall be legibly stamped on each axle on the unfinished portion, unless otherwise specified.

12. *Storing.*—If, as a result of the inspection and tests, more axles are accepted than the order calls for, such accepted axles in excess shall be stamped by the inspector with his own name, and will then be piled and allowed to remain in stock at the works, subject to further orders from the purchasing agent. On receipt of further orders, axles once accepted will not be subjected to further test. In all cases the inspector will keep an accurate record of the melt numbers and the number of axles in each melt which are stored and will transmit this information with each report.

VII. INSPECTION AND REJECTION.

13. *Inspection.*—(a) The inspector shall examine each axle in each melt for workmanship, defects, and to see whether the axles conform to the dimensions given on the order or tracing, or whether they conform to the specifications. All axles, not satisfactory in these respects shall not be considered further. If in this inspection defects are found which the manufacturer can remedy while the inspector is at the works, he may be allowed to correct such defects.

(b) The inspector representing the purchaser shall have free entry at all times, while work on the contract of the purchaser is being performed, to all parts of the manufacturer's works which concern the manufacture of the material ordered. The manufacturer shall afford the inspector, free of cost, all reasonable facility to satisfy him that the material is being furnished in accordance with these specifications.

(c) The purchaser may make the tests to govern the acceptance or rejection of material in his own laboratory or elsewhere. Such tests, however, shall be made at the expense of the purchaser.

(d) All tests and inspection shall be so conducted as not to interfere unnecessarily with the operation of the works.

14. *Rejection.*—Material which, subsequently to above tests at the mills or elsewhere, and its acceptance, develops imperfections shall be rejected and shall be replaced by the manufacturer at his own expense.

15. *Rehearing.*—Samples tested in accordance with this specification, which represent rejected material, shall be preserved 14 days from date of test report. In case of dissatisfaction with results of the tests, the manufacturer may make claim for a rehearing within that time.

Axle Box (British). See JOURNAL BOX.

Axle Box Bearing (British). See JOURNAL BEARING.

Axle Box Cover (British). A hinged movable cover on the tender axle box through which the lubricant is introduced. On British oil axle boxes the cover is generally bolted to the box with a strip of leather interposed to make an oil-tight joint. The oil is replenished through a small orifice closed by a screw plug or spring hinge.

Axle Box Keep (British). The lower part of a tender axle box, which in an oil box contains the lubricant, and in a grease box simply protects the under side of the journal from dust. See CELLAR.

Axle Box Sponge Box (British). See DRIVING BOX CELLAR.

Axle Box Lid. (British). See JOURNAL BOX LID.

Axle Collar. 19, Figs. 1027-1031; 10, Figs. 1044-1048. A rim or enlargement on the end of an axle which takes the end thrust of the journal bearing.

Axle Guard (British). American equivalent, PEDESTAL. The ordinary pattern consists of a wrought iron plate attached to the sole bar, which permits vertical motion of the tender axle box, but restrains movement in any other direction. See also ASH PAN AXLE GUARD.

Axle Guard Crown (British). The main part of the AXLE GUARD.

Axle Guard Crown Washer (British). A piece of wrought iron plate, used as a washer for three or more bolts, which secure the main part of the axle guard to the tender sole bar.

Axle Guard Keep or **Horn Stay** (British). A piece of iron which secures the lower end of the jaws of the tender axle guards together.

Axle Guard Stay Rod or **Axle Guard Stretcher** (British). American equivalent, PEDESTAL TIE BAR. A longitudinal bar connecting the lower ends of the tender axle guards, and keeping them the right distance apart.

Axle Guard Wing (British). The inclined part of an axle guard, strengthening it fore and aft.

Axle Guard Wing Washer (British). A piece of iron plate used as a washer for two or more bolts securing the wing of the axle guard to the sole bar. See AXLE GUARD WING.

Axle Packing. A DUST GUARD, which see. The journal packing is often called axle packing.

Axle Seat. 4, Figs. 897-907. The inside surface of the hole in a wheel which comes in contact with the axle, and not the hole itself. The corresponding part of an axle is called the wheel seat or wheel fit.

B

Babbitt Metal. "An alloy, consisting of 9 parts of tin and 1 of copper used for journal box bearings; so called from its inventor, Isaac Babbitt, of Boston. Some variations have been made, and among the published compositions are:

Copper	1	1
Antimony	1	5
Tin	10	50

Another formula substitutes zinc for antimony. The term is commonly applied to any white alloy for bearings, as distinguished from the metals or brasses in which copper predominates."—Knight.

Babbitt Metal Bearings. A style of bearing of which a great variety of forms exist, which in effect substitutes Babbitt metal in some of its many forms for brass as a bearing surface. LEAD-LINED JOURNAL BEARINGS, are different in that they merely use a thin sheet of lead over the brass, to correct slight irregularities and give an even bearing surface. The bearing or brass should be bored out to remove scale.

Back Bumper. 122, Figs. 101-140. A cast iron or steel beam fastened across the frames under the deck at the back end of a locomotive. Also called tail piece, foot plate and deck plate.

Back Course (Stayless Boiler). The plate on a LENTZ or VANDERBILT BOILER, that corresponds to the outside firebox sheet of an ordinary locomotive boiler.

Back Cylinder Head (Air Brakes). See NON-PRESSURE HEAD.

(Engine Cylinder.) Figs. 595, 598, 599, 601, 603, 605. The CYLINDER HEAD, through which the piston rod passes; the head nearest the crosshead.

Back Face Plate (Steel Tired Wheels). The inner one of the two plates connecting the tire with the hub.

Back Head (Boiler). 129, Figs. 101-140; 4, Figs. 152-186. The plate forming the back end of a boiler and in which the firedoor opening is placed. It is separated from the back firebox sheet by the back water space. Sloping back heads are largely used to increase the grate area and provide more room in the cab. See BOILER.

Back Head Brace. 9, Figs. 152-186. Supports for the back head extending from the side sheets and the roof sheet. They are attached with pins to angle or channel brackets riveted to the inside face of the back head.

Back Head Brace Angle. 5, Figs. 152-186. A commercial angle or channel iron or a steel plate bent to a right angle and riveted inside the boiler back head to hold one end of a brace binding the back head to the side sheet or to the roof sheet of the boiler.

Back Head Brace Jaw. A bifurcation on the end of a back head brace for attaching the brace to a lug on the back head or boiler shell.

Back Head Brace Lug. A projection riveted to the boiler shell or back head sheet for securing one end of a back head brace. See BACK HEAD BRACE ANGLE.

Back Head Brace Pin. A bolt passing through the jaw of a boiler brace and through a corresponding hole in a lug, for holding the brace.

Back Head Crow Foot. 82, Figs. 152-186. A bifurcated lug riveted to the inside of the back head for the attachment of a brace. See CROW FOOT.

Back Head Tee Iron. A T-shaped piece of iron riveted to the inside of the back head for the attachment of a brace. See BACK HEAD BRACE ANGLE.

Back Stop Timbers. Short sub-sills bolted and keyed by packing blocks to the center sills of a tender in line with the draft timbers, to assist the draft or center sills in transmitting the buffing shocks and strains. Usually called a sub-sill.

Black Tube Sheet. See TUBE SHEET.

Back Water Space. 3, Figs. 152-186. The water space at the rear end of the firebox. See WATER SPACE.

Badge Plate (for Boiler Pressure). Fig. 191. A cast or stamped metal plate fastened to the back head of a boiler, usually just below the fire door, to indicate the steam pressure allowed to be carried.

The Interstate Commerce Commission requires the following:

Article 32, Badge Plate.—A metal badge plate showing the allowed steam pressure shall be attached to the boiler head in the cab. If the boiler head is lagged, the lagging and jacket shall be cut away so the plate can be seen.

Baffle Plate. See DIAPHRAGM.

Bail. A curved handle of a more or less semi-circular form for a pail, bucket, lantern or other utensil.

Baker Valve Gear. Figs. 738-745. See VALVE GEAR.

Balance Plate. 53, Figs. 648-761. A plate, usually of cast steel, placed above a side valve to assist in the balancing, and to take up any lost motion due to irregularity of fitting or wear. This plate is rigid horizontally, but has a limited vertical motion dependent upon the packing strips.

Balance Spring. See Brake Head Adjusting Spring.

Balance Strip. 41a, Figs. 648-761. Pieces or bars of metal used as packing to cut off excess of steam pressure from the back of slide valves, and thus, by reducing the pressure on the same to balance the load on the valve seat.

Balance Compound Locomotive. See Compound Locomotive.

Balanced Valve. Figs. 673-676, 686, 691-694, 696. A valve in which the steam pressure on all sides is evenly balanced. All Piston Valves, which see, are balanced valves, and most Slide Valves, which see, are balanced. Balancing is accomplished by admitting steam behind or underneath the valve over the same area as the parts normally under pressure.

Baldwin Articulated Compound Locomotive. The steam at reduced pressure is admitted direct from the boiler to the low pressure cylinders by opening a starting valve in the cab. This allows the locomotive to develop full tractive effort in starting trains. When the driving wheels have made a few revolutions and the low pressure cylinders are receiving their full supply of steam from the high pressure cylinders, the starting valve is closed and the locomotive works compound. See Mallet Articulated Compound Locomotive for further description.

Baltic Type Locomotive (4-6-4). Figs. 2. A locomotive having a four-wheel front truck, three pairs of coupled driving wheels and a four-wheel trailing truck. Used for heavy fast passenger service.

Band. A metal strip or hoop surrounding the outside of a boiler to hold the jacket in place.

A piece of iron shrunk around the middle of a spring to hold its leaves or plates in their relative positions.

Barrel (Boilers). Also called shell. That portion of a locomotive boiler extending from the smokebox to the firebox and enclosing the tubes.

Bearing. The metal block or bushing in contact with a journal is called a bearing. For M. M. Standard journal bearings see Figs. 2243-2265. See Brake Hanger Bearing, Lead Lined Journal Bearing, Brake Shaft Bearing, Lifting Shaft Bearing, Center Bearing, Dust Guard Bearing, Rocker Bearing, Journal Bearing, Side Bearing, Truck Side Bearing, Driving Axle Bearing, Main Rod Bearing, Side Rod Bearing.

Bearing Metal. An alloy of copper and tin or copper and zinc, to which antimony and lead are sometimes added, for use in engine and tender journal bearings. See Anti-Friction Metal, Babbitt Metal.

Bearing Spring (British). American equivalent, bolster spring, or journal box spring. The spring which carries the weight of the vehicle and rests on the axle box. In British practice usually a half-elliptic spring.

Bearing Spring Buckle (British). American equivalent, spring band. A solid wrought iron strap which confines the plates of the bearing spring, and is generally provided with lugs on the lower side so that it cannot be moved transversely or longitudinally on the axle box. The plates are secured to the buckle by a vertical rivet.

Bearing Spring Shoe (British). A cast iron lipped rubbing piece, secured to the under side of the sole bar, on which the ends of a bearing rest.

Bell. 57, Figs. 101-140; Figs. 1653-1666. A device for making a sound, consisting of a hollow, cup-shaped brass casting with a swinging rod or clapper inside, mounted on the boiler of a locomotive to give warning of its approach. Operated either by hand with a bell rope leading into the cab, or by a small air engine, or Bell Ringer.

Bell Clapper. 8, Figs. 1654-1657. A rod having a knob or enlargement on the end hanging from the top of a bell on the inside for the purpose of striking the bell and making a sound. Also called a bell tongue.

Bell Clapper Hanger. 4, Figs. 1654-1657. A lug cast on or fastened to the upper inside surface of a bell for the purpose of hanging the clapper. Also called bell clapper jaw.

Bell Cord or **Bell Rope.** A cord extending from the cab to the lever by which the bell is rung.

Bell Cord Bushing. Figs. 1655-1656. A thimble lining a hole through a partition for a bell cord to pass through. Usually placed in the front or rear wall of the cab, according to the location of the bell.

Bell Crank. An arm or rod attached to a bell to move it and cause it to sound.

A pivoted crank having two arms usually at right angles to each other and in the same plane for changing the direction of motion 90 deg., more or less.

Bell Ringer. Figs. 1651-1666. A small motor consisting of a cylinder, piston, piston rod and suitable valve for admitting compressed air to the cylinder, the piston rod of which moves, by means of a connecting rod, the crank attached to the bell and thus rings it.

Bell Ringer Support. 264, Figs. 101-140. A stand or bracket, bolted to the boiler to form a base to which the bell ringer is bolted.

Bell Rope. See Bell Cord.

Bell Rope Eye. A circular hole in the end of the bell crank arm for the attachment of a rope by which the bell is run.

Bell Rope Stand. 5, Fig. 2127. A post or column for supporting a bell rope.

Bell Spring Balance. Fig. 1658. A device by means of which the swing of a bell is limited. Used to prevent the bell from turning completely over when the bell rope is pulled.

Bell Stand. 58, Figs. 101-140. 9, Figs. 1654-1657. A stand fastened to the boiler shell with two arms on which the studs or trunnions of the bell yoke rest.

Bell Stand Seat. The base or support bolted to the top of the boiler on which the bell stand is secured. Usuullay made in one casting.

Bell Tongue. 8, Figs. 1654-1657.

Bell Yoke. 3, Figs. 1654-1657; 59, Figs. 101-140. A curved piece of metal to which the bell is attached and passing across the top of the bell. It has a stud or trunnion at each end resting in and turning upon bearings on the bell stand.

Belly Brace. See Throat Brace.

Belly Washout Hole. 74, Figs. 152-186. A hole cut in the bottom of the boiler shell through which the boiler can be washed out and the mud and scale removed. Usually located a short distance ahead of the back tube sheet and also back of the front tube sheet.

Belly Washout Hole Flange. 75, Figs. 152-186. A flange riveted around the belly washout hole to strengthen the boiler and shell and to furnish a secure attachment for the belly washout plug or cover.

Belpaire Firebox. Fig. 159; Fig. 149, 156. A firebox with a flat crown sheet joining the side sheets by curves of short radii and having the roof sheet and the upper part of the outer side sheets flat and parallel to those of the inner firebox. These flat parallel plates are then stayed by straight direct vertical and transverse horizontal stays, obviating the necessity of crown bars to support and strengthen the crown sheet. See Firebox.

Bend (Iron Pipes). See Return Bend. They are distinguished as close and open return bends.

Beveled Washer. A washer used to give an even bearing for rods which stand at an acute angle to the surface on which the nut or bolt head bears. Sometimes two such washers which come near together are cast in one piece, and are then called double beveled washers.

Bibb Cock. Literally, a cock with a curved nozzle or spout, but commonly restricted to a cock with a plain valve without springs, moved by the hand only.

Bicycle Type Locomotive (4-2-2). Fig. 2. A locomotive having a four-wheel front truck, one pair of driving wheels and a two-wheel trailing truck. Not in general use.

Billet. See Steel Blooms and Billets.

Binder. See Pedestal Binder.

Binding Post. A short brass stud with a hole through it for a conductor or wire which is held fast in the top or side of the post by a thumb screw or nut.

Blast Pipe (British). See Exhaust Pipe.

Blast Pipe Nozzle (British). See Exhaust Nozzle.

Bleeding Cock or **Bleeding Valve.** Another name for Release Valve, which see. The operation of releasing brakes when performed on a car detached from the locomotive is sometimes called bleeding. The bleeding valve is located in the auxiliary reservoir, and the brakes may be released by holding it open and allowing the air in the brake cylinder to escape.

Block. A solid piece of wood, metal or other material.

Block and Tackle. A general term applied to a pair or more of pulleys and accompanying rope. Also termed fall and tackle, or simply tackle.

Blower. See Motor Blower.

Blower Pipe. 250, Figs. 101-140. A pipe to convey steam from a valve on the boiler head to the exhaust nozzle tip or base of the stack in order to create a draft and thus stimulate the fire when the engine is standing. Also used to diminish black smoke when steam is shut off, as when approaching a station.

Blower Pipe Connection. Fig. 386. A threaded nipple in the side of the smokebox for attaching a steam pipe while the locomotive is standing in the engine house to create a draft and start the fire.

Blower Pipe Coupling Nut. 49, Fig. 386. A union for joining the two parts of the blower pie, *i. e.,* the one leading from the valve on the boiler head and the one leading to the stack or exhaust tip, also for connecting the engine house blower pipe to the blower pipe connection on the smokebox.

Blower Pipe Drain Fitting. Fig. 383. A device placed in the blower pipe for automatically draining from it the water of condensation.

Blower Pipe Fittings. The couplings, unions, elbows, nipples, etc., used in connecting the blower pipe from the valve on the boiler head to the point where it enters the stack or exhaust pipe.

Blower Valve. Figs. 1221, 1226, 1233, 1236. A valve attached to the boiler head, or more usually to the Turret, which see, to admit steam through the blower pipe to the stack, in order to increase the draft. See Ash Pan Blower Valve.

Blow-off Cock. 224, Figs. 101-140. Figs. 329-348. A valve having a large opening, which is screwed into the water leg of the firebox, but sometimes into the back head above the crown sheet, used for emptying the boiler and carrying off accumulated mud and loose scale. See Pneumatic Blow-off Cock.

Blow-off Cock Arm. The handle or lever by means of which the blow-off cock is opened and closed.

Blow-off Cock Hole. 2, Figs. 152-186. The hole in which the blow-off cock is fitted.

Blow-off Cock Extension. A pipe, usually having an elbow or right angle bend, screwed on a blow-off cock to conduct the water from the boiler into a pit or other opening between the rails.

Blow-off Cock Rod. A light rod connected to a blow-off cock for operating it and extending out to the side of the engine, where it is connected to a shaft and handle.

Blow-off Cock Valve. Fig. 346. A valve, controlling by means of air pressure, the operation of a blow-off cock. See Pneumatic Blow-off Cock.

Blow-off Valve. See Blow-off Cock.

Board. "A piece of timber sawed thin, and of considerable length and breadth, compared with the thickness, used for building and other purposes."—Webster. See Running Board.

Body Bolster. 5, Figs. 1762-1766; Fig. 1933. The transverse members of the underframe over the trucks which transmit the loads carried by the longitudinal sills to the truck through the center plates. Metal body bolsters are becoming standard for use on tenders regardless of whether the sills are of wood or steel. The term body transom is sometimes applied to the bolster, but incorrectly, as this term applies more properly to the cross tie timbers. See Bolsters.

Body Center Plate. 8, Figs. 1762-1766. The center plate attached to the under side of the body bolster. See Center Plate.

Body Check Chain Eye. 31, Figs. 1762-1766. An eye bolt or clevis for fastening a truck chain or safety chain to the tender frame. See Truck Check Chain Eye.

Body Check Chain Hook. Fig. 1784. An iron hook on the Check Chain, which see, which enters into the body check chain eye.

Body Side Bearings. 32, Figs. 1762-1766. The upper one of the two Side Bearings, which is attached to the body bolster.

Body Spring. See Bolster Spring.

Bogie (British). A swiveling four-wheel truck used under engines and tenders. See Truck.

Bogie Frame (British). See Truck Frame.

Bogie Frame Cross Stay (British). See Truck Frame Cross Tie.

Bogie Horn Plate (British). See Pedestal.

Bogie Horn Plate Stay (British). See Pedestal Cap.

Bogie Pin (British). See Center Pin.

Boiler. Figs. 146-188; Details 189-360. A steel shell for containing water which is converted into steam by the heat of the fire in the firebox to furnish energy to

move the locomotive. Locomotive boilers are of the internal firebox, straight fire tube type, having a cylindrical shell containing the fire tubes or flues, an enlarged back end for the firebox and an extension front end, or smokebox, leading out from which is the stack. Boilers are classified by their shape as STRAIGHT TOP, which see, having the cylindrical shell of uniform diameter from the firebox to the smokebox; as WAGON TOP, which see, having a conical or sloping course of plates next to the firebox and tapering down to the cylindrical courses; as EXTENDED WAGON TOP, which see, having one or more cylindrical courses between the firebox and the sloping course which tapers on the top and sides to the diameter of the main shell; as CONICAL TYPE, which see, having one or more cylindrical courses between the firebox and the sloping course and a conical connection course which tapers to the diameter of the main shell. They are further classified as WIDE FIREBOX, NARROW FIREBOX, BELPAIRE FIREBOX, and WOOTTEN FIREBOX, which see. See also: FIREBOX, HEATING SURFACE, RADIAL STAY BOILER, RIVETING, STAYBOLT, TUBES, VANDERBILT BOILER, WATER TUBE BOILER, SEPARABLE BOILER, FLEXIBLE BOILER.

Boiler (Radial Stay vs. Crown Bar). At the Master Mechanics' convention of 1896 the following resolution prevailed:

Resolved, That it is the sense of this meeting that the radial stay boiler is as safe as the crown bar boiler, and that the former is easier to keep clean and more economical in repairs (See page 280, report 1896).

Boiler Bearing. 305, Figs. 101-140; Figs. 529, 566. A casting to the top of the frames of the leading unit of an articulated locomotive and upon which the forward end of the boiler is carried by means of a sliding bearing.

Boiler Bearing Plate. 302, Figs. 101-140; Fig. 563. A metal plate, usually of steel, forming the bearing between the boiler bearing saddle casting and the boiler bearing casting.

Boiler Bearing Saddle. 301, Figs. 101-140; Figs. 529, 562, 567. A casting, the top part of which is shaped to fit the boiler shell to which it is secured, and the bottom part forming a flat surface to which a bearing plate is attached. It transmits the weight of the forward portion of the boiler to the leading unit of a Mallet locomotive through the boiler bearing.

Boiler Brace. 203, Figs. 101-140. A stay or brace used to fasten the boiler to the frame. It is placed at the front and extends diagonally down from the front end of the smokebox to the front bumper beam. Formerly a similar brace was used at the rear to connect the back end of the frame to the back head of the boiler, but this has been discarded in recent practice.

A stay or brace used to support the boiler back head or tube sheets and shell and deriving its name from the part it supports as TUBE SHEET BRACE.

Boiler Brace Foot. 76, Figs. 152-186; Fig. 219. The end of a boiler brace through which the brace is riveted to the boiler plates. Sometimes made in a separate piece and attached to the boiler brace by a pin, but also welded securely to the boiler brace in many designs. See CROW FOOT.

Boiler Bracing. Figs. 218, 219. The system of stays and braces used in a boiler to enable its plates to resist the pressure imposed upon them by the steam. See BOILER BRACE, CROWN BAR, STAY BOLT and SLING STAY.

Boiler Centering Device. 303, Figs. 101-140; Fig. 565. A device by means of which the boiler is brought into line after the locomotive has passed through a curve. Used on articulated locomotives.

Boiler Check Valve. 49, Figs. 101-140; Figs. 1368-1390. A check valve placed in an injector delivery pipe and opening against boiler pressure to admit water forced in by an injector.

Boiler Circulation. Figs. 326-328.

Boiler Cross Brace. 83, Figs. 152-186. A rod or bar placed transversely across the boiler to support the two plates to which it is attached. Usually used to tie the flat surfaces of the firebox side sheets and roof sheet above the crown sheet of a Belpaire firebox.

Boiler Feed Pipe. See INJECTOR DELIVERY PIPE.

Boiler Filler. A metal plug screwed in a hole in the upper part of a boiler for convenience in filling with water.

Boiler Inspection.—In 1913 the federal regulations for the inspection and testing of locomotive boilers and appurtenances, as contained in the order of the Interstate Commerce Commission dated June 2, 1911, were adopted as standard. Paragraphs 2, 3, 24, 29, 35, 52 and 54 were changed in 1915 to conform to the latest regulations of the Interstate Commerce Commission. The rules as they now stand are as follows:

RESPONSIBILITY FOR THE GENERAL CONSTRUCTION AND SAFE WORKING PRESSURE.

1. The railroad company will be held responsible for the general design and construction of the locomotive boilers under its control. The safe working pressure for each locomotive boiler shall be fixed by the chief mechanical officer of the company or by a competent mechanical engineer under his supervision, after full consideration has been given to the general design, workmanship, age and condition of the boiler, and shall be determined from the minimum thickness of the shell plates, the lowest tensile strength of the plates, the efficiency of the longitudinal joint, the inside diameter of the course, and the lowest factor of safety allowed.

FACTOR OF SAFETY.

2. The lowest factor of safety to be used for locomotive boilers constructed after January 1, 1912, shall be 4.

The lowest factor of safety to be used for locomotive boilers which were in service or under construction prior to January 1, 1912, shall be as follows:

Effective January 1, 1915, the lowest factor shall be 3, except that, upon application, this period may be extended not to exceed one year, if an investigation shows that conditions warrant it.

Effective January 1, 1916, the lowest factor shall be 3.25.

Effective January 1, 1917, the lowest factor shall be 3.5.

Effective January 1, 1919, the lowest factor shall be 3.75.

Effective January 1, 1921, the lowest factor shall be 4.

3. *Maximum Allowable Stress on Stays and Braces.*—For locomotives constructed after January 1, 1915, the maximum allowable stress per sq. in. of net cross section area on fire box and combustion chamber stays shall be 7,500 lb. The maximum allowable stress per sq. in. of net cross sectional area on round, rectangular or gusset braces shall be 9,000 lb.

For locomotives constructed prior to January 1, 1915, the maximum allowable stress on stays and braces shall

meet the requirements of Rule No. 2, except that when a new fire box and wrapper sheet are applied to such locomotives, they shall be made to meet the requirements of Rule No. 3.

TENSILE STRENGTH OF MATERIAL.

4. When the tensile strength of steel or wrought-iron shell plates is not known, it shall be taken at 50,000 pounds for steel and 45,000 pounds for wrought iron.

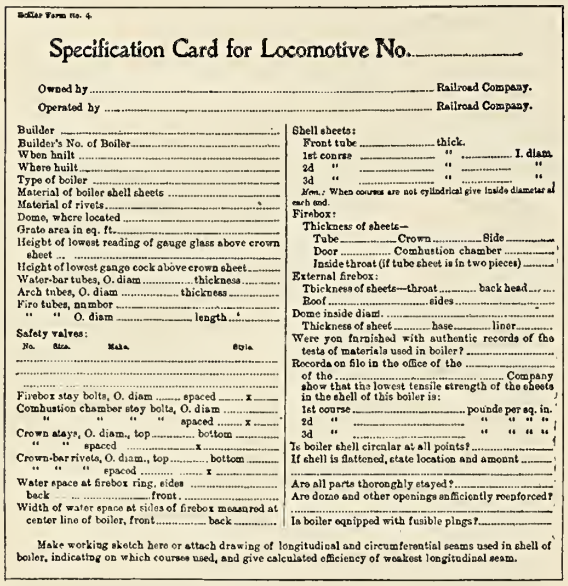

Boiler Form No. 4.

Specification Card for Locomotive No.....

Owned by ..... Railroad Company.
Operated by ..... Railroad Company.

Builder .....
Builder's No. of Boiler .....
When built .....
Where built .....
Type of boiler .....
Material of boiler shell sheets .....
Material of rivets .....
Dome, where located .....
Grate area in sq. ft. .....
Height of lowest reading of gauge glass above crown sheet .....
Height of lowest gauge cock above crown sheet .....
Water-bar tubes, O. diam ..... thickness .....
Arch tubes, O. diam ..... thickness .....
Fire tubes, number .....
" " O. diam ..... length .....

Safety valves:

No.	Size.	Make.	Style.

Firebox stay bolts, O. diam ..... spaced ..... x .....
Combustion chamber stay bolts, O. diam .....
" " " " spaced ..... x .....
Crown stays, O. diam., top ..... bottom .....
" " spaced ..... x .....
Crown-bar rivets, O. diam., top ..... bottom .....
" " " spaced ..... x .....
Water space at firebox ring, sides .....
back ..... front .....
Width of water space at sides of firebox measured at center line of boiler, front ..... back .....

Shell sheets:
Front tube ..... thick.
1st course ..... " ..... I. diam.
2d " ..... " ..... "
3d " ..... " ..... "
Note.: When courses are not cylindrical give inside diameter at each end.
Firebox:
Thickness of sheets—
Tube ..... Crown ..... Side .....
Door ..... Combustion chamber .....
Inside throat (if tube sheet is in two pieces) .....
External firebox:
Thickness of sheets—throat ..... back head .....
Roof ..... sides .....
Dome inside diam. .....
Thickness of sheet ..... base ..... liner .....
Were you furnished with authentic records of the tests of materials used in boiler? .....
Records on file in the office of the .....
of the ..... Company show that the lowest tensile strength of the sheets in the shell of this boiler is:
1st course ..... pounds per sq. in.
2d " ..... " " " "
3d " ..... " " " "
Is boiler shell circular at all points? .....
If shell is flattened, state location and amount .....
Are all parts thoroughly stayed? .....
Are dome and other openings sufficiently reenforced? .....
Is boiler equipped with fusible plugs? .....

Make working sketch here or attach drawing of longitudinal and circumferential seams used in shell of boiler, indicating on which courses used, and give calculated efficiency of weakest longitudinal seam.

The maximum stresses at the allowed working pressure were found by calculation to be as follows:

Stay bolts at root of thread ..... lbs. per sq. in.
Stay bolts at reduced section ..... " " " "
Crown stays or crown-bar rivets at root of thread or smallest section, top ..... lbs. per sq. in.
Crown stays or crown-bar rivets at root of thread or smallest section, bottom ..... lbs. per sq. in.

Round and rectangular braces ..... lbs. per sq. in.
Gusset braces ..... " " " "
Shearing stress on rivets ..... " " " "
Tension on net section of plate in longitudinal seam of lowest efficiency, pounds per sq. in. .....

Dimensions and data taken from locomotive were furnished by .....
Data upon which above calculations were made were obtained from drawing No. .....
dated ..... furnished by ..... Company.

Mechanical Engineer.

State of .....
County of ..... } ss:

..... being duly sworn says that he is the officer who signed the foregoing specification, that he has satisfied himself of the correctness of the drawings and data used, has verified all of the calculations, and has examined the record of present condition of boiler dated ..... and sworn to by inspector .....
and believes that the design, construction, and condition of boiler No. ..... renders it safe for a working pressure of ..... pounds per square inch.

(Name of affiant.)

Subscribed and sworn to before me
this ..... day of ....., 191

Notary Public.

Approved:

FORM NO. 4—FRONT AND BACK OF LOCOMOTIVE SPECIFICATION CARD.

SHEARING STRENGTH OF RIVETS.

5. The maximum shearing strength of rivets per square inch of cross section area shall be taken as follows:

	Pounds.
Iron rivets in single shear	38,000
Iron rivets in double shear	76,000
Steel rivets in single shear	44,000
Steel rivets in double shear	88,000

6. A higher shearing strength may be used for rivets when it can be shown by test that the rivet material used is of such quality as to justify a higher allowable shearing strength.

RULES FOR INSPECTION.

7. The mechanical officer in charge at each point where boiler work is done will be held responsible for the inspection and repair of all locomotive boilers and their appurtenances under his jurisdiction. He must know that all defects disclosed by any inspection are properly repaired before the locomotive is returned to service.

8. The term inspector as used in these rules and instructions, unless otherwise specified, will be held to mean the railroad company's inspector.

INSPECTION OF INTERIOR OF BOILER.

9. *Time of Inspection.*—The interior of every boiler shall be thoroughly inspected before the boiler is put into service, and whenever a sufficient number of flues are removed to allow examination.

10. *Flues to Be Removed.*—All flues of boilers in service, except as otherwise provided, shall be removed at least once every three years, and a thorough examination shall be made of the entire interior of the boiler. After flues are taken out, the inside of the boiler must have the scale removed and be thoroughly cleaned. This period for the removal of flues may be extended upon application if an investigation shows that conditions warrant it.

11. *Method of Inspection.*—The entire interior of the boiler must then be examined for cracks, pitting, grooving, or indications of overheating and for damage where mud has collected, or heavy scale formed. The edges of plates, all laps, seams and points where cracks and defects are likely to develop, or which an exterior examination may have indicated, must be given an especially minute examination. It must be seen that braces and stays are taut, that pins are properly secured in place, and that each is in condition to support its proportion of the load.

12. *Repairs.*—Any boiler developing cracks in the barrel shall be taken out of service at once, thoroughly repaired, and reported to be in satisfactory condition before it is returned to service.

13. *Lap Joint Seams.*—Every boiler having lap joint longitudinal seams without reinforcing plates shall be examined with special care to detect grooving or cracks at the edges of the seams.

14. *Fusible Plugs.*—If boilers are equipped with fusible plugs they shall be removed and cleaned of scale at least once every month. Their removal must be noted on the report of inspection.

INSPECTION OF EXTERIOR OF BOILER.

15. *Time of Inspection.*—The exterior of every boiler shall be thoroughly inspected before the boiler is put into service and whenever the jacket and the lagging are removed.

16. *Lagging to Be Removed.*—The jacket and lagging shall be removed at least once every five years and a thorough inspection made of the entire exterior of the boiler. The jacket and lagging shall also be removed whenever, on account of indications of leaks, the United States inspector or the railroad company's inspector considers it desirable or necessary.

TESTING BOILERS.

17. *Time of Testing.*—Every boiler, before being put into service, and at least once every 12 months thereafter, shall be subjected to hydrostatic pressure twenty-five per cent above the working pressure.

18. *Removal of Dome Cap.*—The dome cap and

Boiler Form No. 1.

MONTHLY LOCOMOTIVE BOILER INSPECTION AND REPAIR REPORT.

Month of ....., 191 LOCOMOTIVE { Number..... Initial .....

.... *Company.*

In accordance with the act of Congress approved February 17, 1911, and the rules and instructions issued in pursuance thereof and approved by the Interstate Commerce Commission, I hereby certify that on ....., 191 , at ....., I inspected the boiler of Locomotive No. ..... and the appurtenances thereof, operated by the ..... Company; that all defects disclosed by said inspection have been repaired, except as noted on the back of this report; that to the best of my knowledge and belief said boiler and appurtenances are in a proper condition for use and safe to operate with a steam pressure of ..... pounds per square inch.

1. Safety valves set at ..... lbs. ..... lbs. ..... lbs., on ....., 191
2. Steam gauges tested and left in good condition on ....., 191
3. Was boiler washed and gauge cock and water glass cock spindles removed and cocks cleaned? .....
4. Were both injectors tested and left in good condition? .....
5. Were all steam leaks repaired? .....
6. Condition of flues and fire-box sheets .....
7. Condition of stay bolts and crown stays .....
8. Number of crown and stay bolts renewed .....
9. Condition of arch or water bar tubes, if used .....
10. Date of previous hydrostatic test ....., 191

..... *Inspector.*

STATE OF ..... } ss:
COUNTY OF ..... }

Subscribed and sworn to before me this ..... day of ....., 191 , by ...., known personally to me to be ..... of the .... Company at .....

..... *Notary Public.*

I hereby certify that to the best of my knowledge and belief the above report is correct.

(This report not to be folded.) 12—449 ..... *Officer in Charge.*

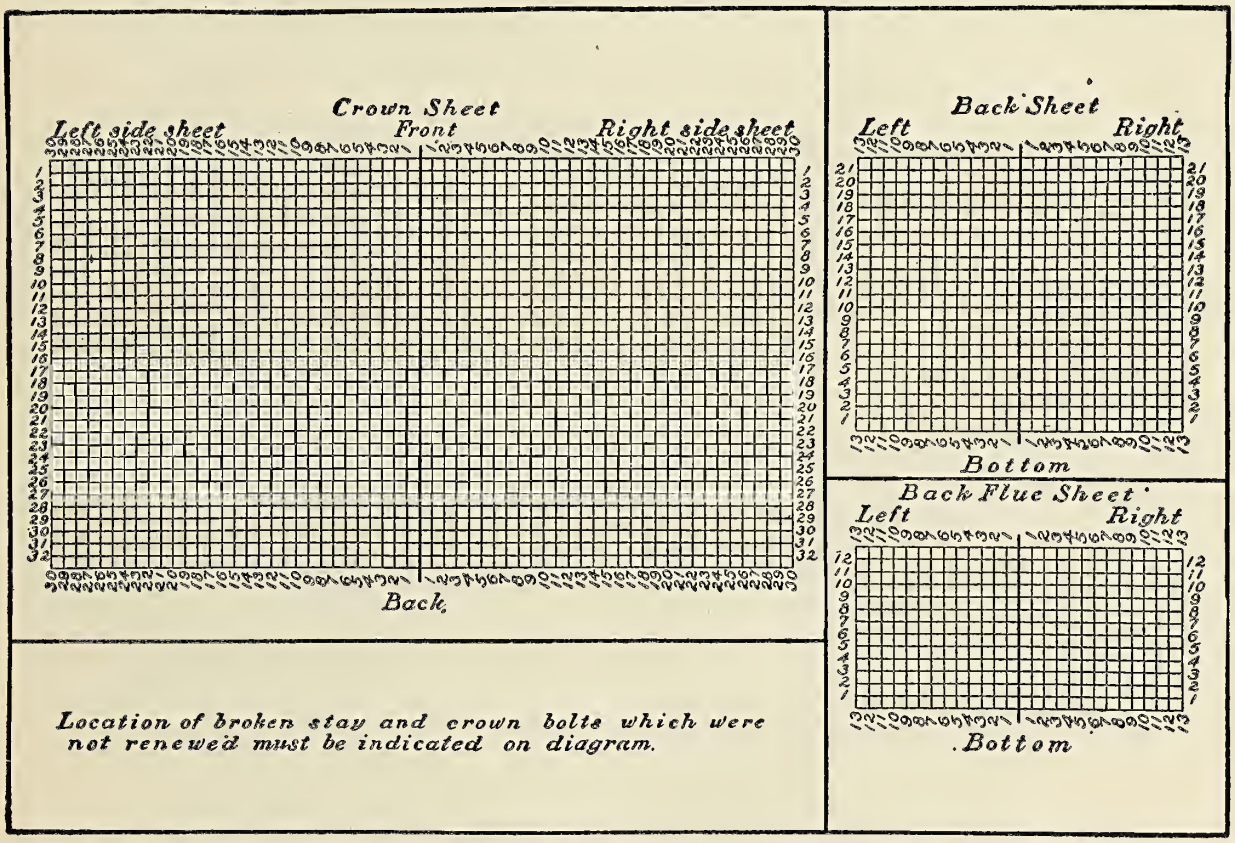

FORM NO. 1—FRONT AND BACK OF MONTHLY LOCOMOTIVE BOILER INSPECTION AND REPAIR REPORT.

throttle standpipe must be removed at the time of making the hydrostatic test, and the interior surface and connections of the boiler examined as thoroughly as conditions will permit. In case the boiler can be entered and thoroughly inspected without removing the throttle standpipe, the inspector may make the inspection by removing the dome cap only, but the variation from the rule must be noted in the report of inspection.

19. *Witness of Test.*—When the test is being made by the railroad company's inspector, an authorized representative of the company, thoroughly familiar with boiler construction, must personally witness the test and thoroughly examine the boiler while under hydrostatic pressure.

Boiler Form No. 3.

ANNUAL LOCOMOTIVE BOILER INSPECTION AND REPAIR REPORT.

.....*Company.* | LOCOMOTIVE { NUMBER ..... INITIAL .....

In accordance with the act of Congress approved February 17, 1911, and the rules and instructions issued in pursuance thereof and approved by the Interstate Commerce Commission, I hereby certify that on ....., 191 , at ....., I inspected the boiler of Locomotive No. ..... and the appurtenances thereof, operated by the ..... Company; that all defects disclosed by said inspection have been repaired, except as noted on the back of this report; that to the best of my knowledge and belief said boiler and appurtenances thereof are in a proper condition for use, and safe to operate with a steam pressure of ..... pounds per square inch.

1. Date of previous hydrostatic test ....., 191
2. Date of previous removal of flues ....., 191
3. Date of previous removal of lagging from barrel ....., 191
4. Date of previous removal of caps from flexible stay bolts ....., 191
5. Were all flues removed? .....
6. Number of flues removed .....
7. Was all lagging on fire box removed? .....
8. Was all lagging on barrel removed? .....
9. Were caps removed from all flexible stay bolts? .....
10. Were dome cap and throttle standpipe removed? .....
11. Hydrostatic test pressure of ..... pounds was applied.
12. Were both injectors tested and left in good condition? .....
13. Were steam gauges tested and left in good condition? .....
14. Safety valves set to pop at ..... pounds ..... pounds ..... pounds.
15. Was boiler washed; water glass cocks and gauge cocks cleaned? .....
16. Were all steam leaks repaired? .....
17. Number of broken crown stays and stay bolts renewed .....
18. Condition of exterior of barrel .....
19. Condition of interior of barrel .....
20. Condition of fire-box sheets and flues .....
21. Condition of arch tubes .....
22. Condition of water-bar tubes .....
23. Condition of cross stays .....
24. Condition of throat stays .....
25. Condition of sling stays .....
26. Condition of crown bars, braces, and bolts .....
27. Condition of dome braces .....
28. Condition of back head braces .....
29. Condition of front flue sheet braces .....

....., *Inspector.*

I hereby certify that to the best of my knowledge and belief the above report is correct.

STATE OF ..... } ss:
COUNTY OF .....

....., *Officer in Charge.*

Subscribed and sworn to before me this ..... day of ....., 191

(This report not to be folded.) 12—450

....., *Notary Public.*

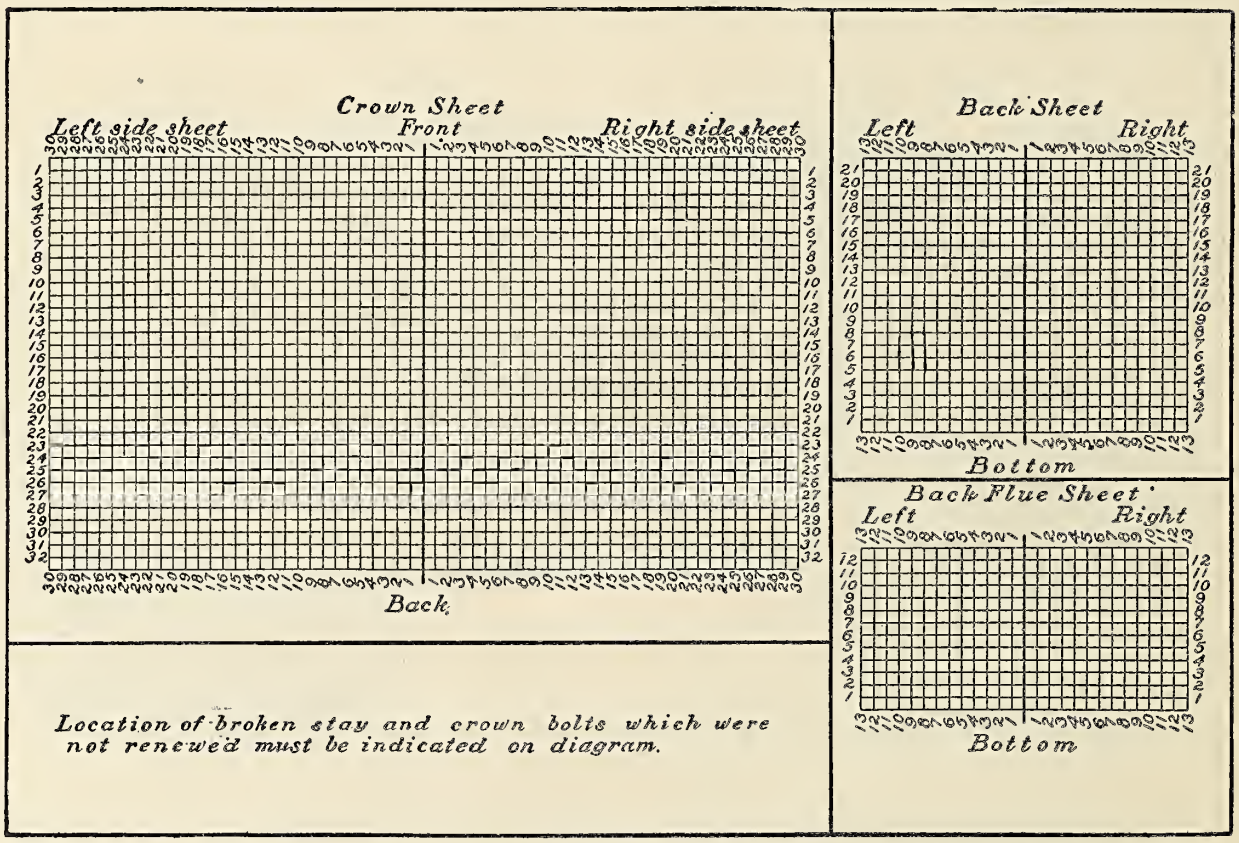

FORM NO. 3—FRONT AND BACK OF ANNUAL LOCOMOTIVE BOILER INSPECTION AND REPAIR REPORT.

20. *Repairs and Steam Test.*—When all necessary repairs have been completed, the boiler shall be fired up and the steam pressure raised to not less than the allowed working pressure, and the boiler and appurtenances carefully examined. All cocks, valves, seams, bolts and rivets must be tight under this pressure, and all defects disclosed must be repaired.

STAY-BOLT TESTING.

21. *Time of Testing Rigid Bolts.*—All stay bolts shall be tested at least once each month. Stay bolts shall also be tested immediately after every hydrostatic test.

22. *Method of Testing Rigid Bolts.*—The inspector must tap each bolt and determine the broken bolts from

the sound or the vibration of the sheet. If stay-bolt tests are made when the boiler is filled with water, there must be not less than 50 pounds pressure on the boiler. Should the boiler not be under pressure, the test may be made after draining all water from the boiler in which case the vibration of the sheet will indicate any unsoundness. The latter test is preferable.

23. *Method of Testing Flexible Stay Bolts with Caps.*—All flexible stay bolts having caps over the outer ends shall have the caps removed at least once every 18 months, and also whenever the United States inspector or the railroad company's inspector considers the removal desirable in order to thoroughly inspect the stay bolts. The fire box sheets should be examined carefully at least once a month to detect any bulging or indications of broken stay bolts.

STAY-BOLT TESTING.

24. *Method of Testing Flexible Stay Bolts Without Caps.*—Flexible stay bolts which do not have caps shall be tested once each month, the same as rigid bolts.

Each time a hydrostatic test is applied, such stay-bolt test shall be made while the boiler is under hydrostatic pressure not less than the allowed working pressure, and proper notation of such test made on Form No. 3.

25. *Broken Stay Bolts.*—No boiler shall be allowed to remain in service when there are two adjacent stay bolts broken or plugged in any part of the fire box or combustion chamber, nor when three or more are broken or plugged in a circle 4 feet in diameter, nor when five or more are broken or plugged in the entire boiler.

26. *Telltale Holes.*—All stay bolts shorter than 8 inches applied after July 1, 1911, except flexible bolts, shall have telltale holes three-sixteenths inch in diameter, and not less than 1¼ inches deep in the outer end. These holes must be kept open at all times.

27. All stay bolts shorter than 8 inches, except flexible bolts, and rigid bolts which are behind frames and braces, shall be drilled when the locomotive is in the shop for heavy repairs, and this work must be completed prior to July 1, 1914.

STEAM GAGES.

28. *Location of Gages.*—Every boiler shall have at least one steam gage which will correctly indicate the working pressure. Care must be taken to locate the gage so that it will be kept reasonably cool, and can be conveniently read by the enginemen.

29. *Siphon.*—Every gage shall have a siphon of ample capacity to prevent steam entering the gage, The pipe connection shall enter the boiler direct, and shall be maintained steam-tight between boiler and gage. The siphon pipe and its connections to the boiler must be cleaned each time the gage is tested.

30. *Time of Testing.*—Steam gages shall be tested at least once every three months, and also when any irregularity is reported.

31. *Method of Testing.*—Steam gages shall be compared with an accurate test gage or dead-weight tester, and gages found inaccurate shall be corrected before being put into service.

32. *Badge Plates.*—A metal badge plate showing the allowed steam pressure shall be attached to the boiler head in the cab. If boiler head is lagged, the lagging and jacket shall be cut away so the plate can be seen.

33. *Boiler Number.*—The builder's number of the boiler, if known, shall be stamped on the dome. If the builder's number of the boiler can not be obtained, an assigned number, which shall be used in making out the specification card, shall be stamped on dome.

SAFETY VALVES.

34. *Number and Capacity.*—Every boiler shall be equipped with at least two safety valves, the capacity of which shall be sufficient to prevent, under any conditions of service, an accumulation of pressure more than 5 per cent above the allowed steam pressure.

35. *Setting of Safety Valves.*—Safety valves shall be set to pop at pressures not exceeding 6 lb. above the working steam pressure. When setting safety valves, two steam gages shall be used, one of which must be so located that it will be in full view of the person engaged in setting such valves; and if the pressure indicated by the gages varies more than 3 lb. they shall be removed from the boiler, tested and corrected before the safety valves are set. Gages shall in all cases be tested immediately before the safety valves are set or any change made in the setting. When setting safety valves the water level in the boiler shall not be above the highest gage cock.

36. *Time of Testing.*—Safety valves shall be tested under steam at least once every three months, and also when any irregularity is reported.

WATER GLASS AND GAGE COCKS.

37. *Number and Location.*—Every boiler shall be equipped with at least one water glass and three gage cocks. The lowest gage cock and the lowest reading of the water glass shall be not less than 3 inches above the highest part of the crown sheet. Locomotives which are not now equipped with water glasses shall have them applied on or before July 1, 1912.

38. *Water Glass Valves.*—All water glasses shall be supplied with two valves or shut-off cocks, one at the upper and one at the lower connection to the boiler, and also a drain cock, so constructed and located that they can be easily opened and closed by hand.

39. *Time of Cleaning.*—The spindles of all gage cocks and water glass cocks shall be removed and cocks thoroughly cleaned of scale and sediment at least once each month.

40. All water glasses must be blown out and gage cocks tested before each trip, and gage cocks must be maintained in such condition that they can be easily opened and closed by hand without the aid of a wrench or other tool.

41. *Water and Lubricator Glass Shields.*—All tubular water glasses and lubricator glasses must be equipped with a safe and suitable shield which will prevent the glass from flying in case of breakage, and such shield shall be properly maintained.

42. *Water Glass Lamps.*—All water glasses must be supplied with a suitable lamp properly located to enable the engineer to easily see the water in the glass.

INJECTORS.

43. Injectors must be kept in good condition, free from scale, and must be tested before each trip. Boiler checks, delivery pipes, feed-water pipes, tank hose and tank valves must be kept in good condition, free from leaks and from foreign substances that would obstruct the flow of water.

FLUE PLUGS.

44. Flue plugs must be provided with a hole through the center not less than three-fourths inch in diameter. When one or more tubes are plugged at both ends

the plugs must be tied together by means of a rod not less than five-eighths inch in diameter. Flue plugs must be removed and flues repaired at the first point where such repairs can properly be made.

WASHING BOILERS.

45. *Time of Washing.*—All boilers shall be thoroughly washed as often as the water conditions require, but not less frequently than once each month. All boilers shall be considered as having been in continuous service between washouts unless the dates of the days that the boiler was out of service are properly certified on washout reports and the report of inspection.

46. *Plugs to Be Removed.*—When boilers are washed all washout, arch and water-bar plugs must be removed.

47. *Water Tubes.*—Special attention must be given the arch and water-bar tubes to see that they are free from scale and sediment.

48. *Office Record.*—An accurate record of all locomotive boiler washouts shall be kept in the office of the railroad company. The following information must be entered on the day that the boiler is washed:

(a) Number of locomotive.

(b) Date of washout.

(c) Signature of boiler washer or inspector.

(d) Statement that spindles of gage cocks and water glass cocks were removed and cocks cleaned.

(e) Signature of the boiler inspector or the employee who removed the spindles and cleaned the cocks.

STEAM LEAKS.

49. *Leaks Under Lagging.*—If a serious leak develops under the lagging, an examination must be made and the leak located. If the leak is found to be due to a crack in the shell or to any other defect which may reduce safety, the boiler must be taken out of service at once, thoroughly repaired and reported to be in satisfactory condition before it is returned to service.

50. *Leaks in Front of Enginemen.*—All steam valves, cocks and joints, studs, bolts and seams shall be kept in such repair that they will not emit steam in front of the enginemen so as to obscure their vision.

FILING REPORTS.

51. *Report of Inspection.*—Not less than once each month and within ten days after each inspection, a report of Inspection, Form No. 1, size 6 by 9 inches. shall be filed with the district inspector of locomotive boilers for each locomotive used by a railroad company, and a copy shall be filed in the office of the chief mechanical officer having charge of the locomotive.

52. A copy of the monthly inspection report, Form No. 1, or annual inspection report, Form No. 3, properly filled out, shall be placed under glass in a conspicuous place in the cab of the locomotive, before the boiler inspected is put into service.

53. Not less than once each year and within ten days after hydrostatic and other required tests have been completed, a report of such tests showing general condition of the boiler and repairs made shall be submitted on Form No. 3,* size 6 by 9 inches, and filed with the district inspector of locomotive boilers, and a copy shall be filed in the office of the chief mechanical officer having charge of the locomotive. The monthly report will not be required for the month in which this report is filed.

54. *Specification Card.*—A specification card, size 8 by 10½ in., Form No. 4, containing the results of the calculations made in determining the working pressure and other necessary data shall be filed in the office of the chief inspector of locomotive boilers, for each locomotive boiler. A copy shall be filed in the office of the chief mechanical officer having charge of the locomotive. Every specification card shall be verified by the oath of the engineer making the calculations, and shall be approved by the chief mechanical officer. These specification cards shall be filed as promptly as thorough examination and accurate calculation will permit. Where accurate drawings of boilers are available, the data for specification card, Form No. 4, may be taken from the drawings, and such specification cards must be completed and forwarded prior to July 1, 1912. Where accurate drawings are not available, the required data must be obtained at the first opportunity when general repairs are made, or when flues are removed. Specification cards must be forwarded within one month after examination has been made, and all examinations must be completed and specification cards filed prior to July 1, 1913, flues being removed if necessary to enable the examination to be made before this date.

When any repairs or changes are made which affect the data shown on the specification card, a corrected card or an alteration report on an approved form, size 8 by 10½ in., properly certified to, giving details of such changes shall be filed within 30 days from the date of their completion. This report should cover:

(a) Application of new barrel sheets or domes.

(b) Application of patches to barrels or domes of boilers, or to portion of wrapper sheet of crowbar which is not supported by stay bolts.

(c) Longitudinal seam reinforcements.

(d) Changes in size or number of braces, giving maximum stress.

(e) Initial application of superheaters, arch or water bar tubes, giving number and dimensions of tubes.

(f) Changes in number or capacity of safety valves.

Report of patches should be accompanied by a drawing or blueprint of the patch, showing its location in regard to the center line of boiler, giving all necessary dimensions and showing the nature and location of the defect. Patches previously applied should be reported the first time boiler is stripped to permit an examination.

ACCIDENT REPORTS.

55. In the case of an accident resulting from failure, from any cause, of a locomotive boiler, or any of its appurtenances, resulting in serious injury or death to one or more persons, the carrier owning or operating such locomotive shall immediately transmit by wire to the chief inspector of locomotive boilers, at his office in Washington, D. C., a report of such accident, stating the nature of the accident, the place at which it occurred, as well as where the locomotive may be inspected, which wire shall be immediately confirmed by mail, giving a full, detailed report of such accident, stating, so far as may be known, the causes, and giving a complete list of the killed or injured.

[Public—No. 383.]
[S. 6702.]

AN ACT To promote the safety of employees and travelers upon railroads by compelling common carriers engaged in interstate commerce to equip their locomotives with safe and suitable boilers and appurtenances thereto.

Be it enacted by the Senate and House of Representatives of the United States of America in Congress assembled, That the provisions of this act shall apply to any common carrier or carriers, their officers, agents, and employees, engaged in the transportation of passengers or property by railroad in the District of Columbia, or in any Territory of the United States, or from one State or Territory of the United States or the District of Columbia to any other State or Territory of the United States or the District of Columbia, or from any place in the United States to an adjacent foreign country, or from any place in the United States through a foreign country to any other place in the United States. The term "railroad" as used in this act shall include all the roads in use by any common carrier operating a railroad, whether owned or operated under a contract, agreement, or lease, and the term "employees" as used in this act shall be held to mean persons actually engaged in or connected with the movement of any train.

Sec. 2. That from and after the first day of July, nineteen hundred and eleven, it shall be unlawful for any common carrier, its officers or agents, subject to this act to use any locomotive engine propelled by steam power in moving interstate or foreign traffic unless the boiler of said locomotive and appurtenances thereof are in proper condition and safe to operate in the service to which the same is put, that the same may be employed in the active service of such carrier in moving traffic without unnecessary peril to life or limb, and all boilers shall be inspected from time to time in accordance with the provisions of this act, and be able to withstand such test or tests as may be prescribed in the rules and regulations hereinafter provided for.

Sec. 3. That there shall be appointed by the President, by and with the advice and consent of the Senate, a chief inspector and two assistant chief inspectors of locomotive boilers, who shall have general superintendence of the inspectors hereinafter provided for, direct them in the duties hereby imposed upon them, and see that the requirements of this act and the rules, regulations, and instructions made or given hereunder are observed by common carriers subject hereto. The said chief inspector and his two assistants shall be selected with reference to their practical knowledge of the construction and repairing of boilers, and to their fitness and ability to systematize and carry into effect the provisions hereof relating to the inspection and maintenance of locomotive boilers. The chief inspector shall receive a salary of four thousand dollars per year and the assistant chief inspectors shall receive a salary of three thousand dollars per year; and each of the three shall be paid his traveling expenses incurred in the performance of his duties. The office of the chief inspector shall be in Washington, District of Columbia, and the Interstate Commerce Commission shall provide such stenographic and clerical help as the business of the offices of the chief inspector and his said assistants may require.

Sec. 4. That immediately after his appointment and qualification the chief inspector shall divide the territory comprising the several States, the Territories of New Mexico and Arizona, and the District of Columbia into fifty locomotive-boiler inspection districts, so arranged that the service of the inspector appointed for each district shall be most effective, and so that the work required of each inspector shall be substantially the same. Thereupon there shall be appointed by the Interstate Commerce Commission fifty inspectors of locomotive boilers. Said inspectors shall be in the classified service and shall be appointed after competitive examination according to the law and the rules of the Civil Service Commission governing the classified service. The chief inspector shall assign one inspector so appointed to each of the districts hereinbefore named. Each inspector shall receive a salary of one thousand eight hundred dollars per year and his traveling expenses while engaged in the performance of his duty. He shall receive in addition thereto an annual allowance for office rent, stationery, and clerical assistance, to be fixed by the Interstate Commerce Commission, but not to exceed in the case of any district inspector six hundred dollars per year. In order to obtain the most competent inspectors possible, it shall be the duty of the chief inspector to prepare a list of questions to be propounded to applicants with respect to construction, repair, operation, testing, and inspection of locomotive boilers, and their practical experience in such work, which list, being approved by the Interstate Commerce Commission, shall be used by the Civil Service Commission as a part of its examination. No person interested, either directly or indirectly, in any patented article required to be used on any locomotive under supervision or who is intemperate in his habits shall be eligible to hold the office of either chief inspector or assistant or district inspector.

Sec. 5. That each carrier subject to this act shall file its rules and instructions for the inspection of locomotive boilers with the chief inspector within three months after the approval of this act, and after hearing and approval by the Interstate Commerce Commission, such rules and instructions, with such modifications as the commission requires, shall become obligatory upon such carrier: *Provided, however,* That if any carrier subject to this act shall fail to file its rules and instructions the chief inspector shall prepare rules and instructions not inconsistent herewith for the inspection of locomotive boilers, to be observed by such carrier; which rules and instructions, being approved by the Interstate Commerce Commission, and a copy thereof being served upon the president, general manager, or general superintendent of such carrier, shall be obligatory, and a violation thereof punished as hereinafter provided: *Provided also,* That such common carrier may from time to time change the rules and regulations herein provided for, but such change shall not take effect and the new rules and regulations be in force until the same have been filed with and approved by the Interstate Commerce Commission. The chief inspector shall also make all needful rules, regulations, and instructions not inconsistent herewith for the conduct of his office and for the government of the district inspectors: *Provided, however,* That all such rules and instructions shall be approved by the Interstate Commerce Commission before they take effect.

Sec. 6. That it shall be the duty of each inspector to become familiar, so far as practicable, with the condition of each locomotive boiler ordinarily housed or repaired in his district, and if any locomotive is ordinarily housed or repaired in two or more districts, then the chief inspector or an assistant shall make such division between inspectors as will avoid the necessity for duplication of work. Each inspector shall make such personal inspection of the locomotive boilers under his care from time to time as may be necessary to fully carry out the provisions of this act, and as may be consistent with his other duties, but he shall not

be required to make such inspections at stated times or at regular intervals. His first duty shall be to see that the carriers make inspections in accordance with the rules and regulations established or approved by the Interstate Commerce Commission, and that carriers repair the defects which such inspections disclose before the boiler or boilers or appurtenances pertaining thereto are again put in service. To this end each carrier subject to this act shall file with the inspector in charge, under the oath of the proper officer or employee, a duplicate of the report of each inspection required by such rules and regulations, and shall also file with such inspector, under the oath of the proper officer or employee, a report showing the repair of the defects disclosed by the inspection. The rules and regulations hereinbefore provided for shall prescribe the time at which such reports shall be made. Whenever any district inspector shall, in the performance of his duty, find any locomotive boiler or apparatus pertaining thereto not conforming to the requirements of the law or the rules and regulations established and approved as hereinbefore stated, he shall notify the carrier in writing that the locomotive is not in serviceable condition, and thereafter such boiler shall not be used until in serviceable condition: *Provided,* That a carrier, when notified by an inspector in writing that a locomotive boiler is not in serviceable condition, because of defects set out and described in said notice, may within five days after receiving said notice appeal to the chief inspector by telegraph or by letter to have said boiler re-examined, and upon receipt of the appeal from the inspector's decision, the chief inspector shall assign one of the assistant chief inspectors or any district inspector other than the one from whose decision the appeal is taken to re-examine and inspect said boiler within fifteen days from date of notice. If upon such re-examination the boiler is found in serviceable condition, the chief inspector shall immediately notify the carrier in writing, whereupon such boiler may be put into service without further delay; but if the re-examination of said boiler sustains the decision of the district inspector, the chief inspector shall at once notify the carrier owning or operating such locomotive that the appeal from the decision of the inspector is dismissed, and upon the receipt of such notice the carrier may, within thirty days, appeal to the Interstate Commerce Commission, and upon such appeal, and after hearing, said Commission shall have power to revise, modify, or set aside such action of the chief inspector and declare that said locomotive is in serviceable condition and authorize the same to be operated: *Provided further,* That pending either appeal the requirements of the inspector shall be effective.

Sec. 7. That the chief inspector shall make an annual report to the Interstate Commerce Commission of the work done during the year, and shall make such recommendations for the betterment of the service as he may desire.

Sec. 8. That in the case of accident resulting from failure from any cause of a locomotive boiler or its appurtenances, resulting in serious injury or death to one or more persons, a statement forthwith must be made in writing of the fact of such accident, by the carrier owning or operating said locomotive, to the chief inspector. Whereupon the facts concerning such accident shall be investigated by the chief inspector or one of his assistants, or such inspector as the chief inspector may designate for that purpose. And where the locomotive is disabled to the extent that it can not be run by its own steam, the part or parts affected by the said accident shall be preserved by said carrier intact, so far as possible, without hindrance or interference to traffic until after said inspection. The chief inspector or an assistant or the designated inspector making the investigation shall examine or cause to be examined thoroughly the boiler or part affected, making full and detailed report of the cause of the accident to the chief inspector.

The Interstate Commerce Commission may at any time call upon the chief inspector for a report of any accident embraced in this section, and upon the receipt of said report, if it deems it to the public interest, make reports of such investigations, stating the cause of accident, together with such recommendations as it deems proper. Such reports shall be made public in such manner as the commission deems proper. Neither said report nor any report of said investigation nor any part thereof shall be admitted as evidence or used for any purpose in any suit or action for damages growing out of any matter mentioned in said report or investigation.

Sec. 9. That any common carrier violating this act or any rule or regulation made under its provisions or any lawful order of any inspector shall be liable to a penalty of one hundred dollars for each and every such violation, to be recovered in a suit or suits to be brought by the United States attorney in the district court of the United States having jurisdiction in the locality where such violation shall have been committed; and it shall be the duty of such attorneys, subject to the direction of the Attorney General, to bring such suits upon duly verified information being lodged with them, respectively, of such violations having occurred; and it shall be the duty of the chief inspector of locomotive boilers to give information to the proper United States attorney of all violations of this act coming to his knowledge.

Sec. 10. That the total amounts directly appropriated to carry out the provisions of this act shall not exceed for any one fiscal year the sum of three hundred thousand dollars.

Approved, February 17, 1911.

Boiler Jacket. See Jacket.

Boiler Performance. See Locomotive.

Boiler Plate. Sheets of iron or mild steel from ¼ to 1¼ in. thick, of which the boiler is made.

Boiler Pressure. See Steam Pressure.

Boiler Shell. 52, Figs. 152-186. The cylindrical part of a boiler in front of the firebox, and the roof and firebox outside sheets.

Boiler Staying (British). See Boiler Bracing.

Boiler Steel (Specification for). See Steel.

Boiler Tee. A T-shaped piece of iron riveted to one of the boiler plates for attaching a boiler brace.

Boiler Test Plate. Fig. 191. A plate showing the allowed steam pressure, attached to the boiler head in the cab. See Boiler Inspection.

Boiler Tester. Figs. 1391, 1393, 1398. A device for forcing water into a boiler under pressure for the purpose of testing it.

Boiler Testing. See Boiler Inspection.

Boiler Tube. See Tube and Flue.

Boiler Washer. Figs. 1391, 1393. A device for forcing water into a boiler under pressure for the purpose of washing out the mud and scale.

Boiler Washing. See Boiler Inspection.

Bolster. 5, Figs. 1762-1766. Figs. 1933-1946. A trussed wooden beam or a rolled or pressed steel shape or a steel casting placed across the frame of a tender truck to receive, through the center plate, the weight of the tender, and transfer it to the truck frame and wheels through the springs on which it is carried. A similar bolster is placed transversely on the under side of the tender sills, over the center of each truck, and is called a Body Bolster, which see. It transfers the weight through the center plates to the truck bolster. Two-wheel engine trailing trucks also have bolsters, which are often combined with the journal boxes. See Engine Truck Swing Bolster, Swing Bolster.

Bolster Arch Bar. The name sometimes applied to the upper bar in the side frame of a diamond arch bar tender truck. See Arch Bar.

Bolster Center Casting. A hollow rectangular casting placed between the draft timbers or center sills and the body bolster plates. The king bolt passes through it.

Bolster Chafing Plate. An iron plate used on tender trucks, attached to the side of the transom to prevent wear from abrasion by movement of the bolster. More properly Transom Chafing Plate, which see. The corresponding casting on the side of the bolster, which is, strictly speaking, the bolster chafing plate, is commonly called the friction block or friction plate.

Bolster End Cap. A metal plate over the end of the truck bolster, replacing the bolster truss rod washers used on trussed wooden bolsters.

Bolster Flitch Plates. The iron or steel plates of a built-up bolster, sandwiched between wood pieces. They are rarely met with now, having been almost entirely superseded by metal bolsters. They are also called bolster sandwich plates.

Bolster Guide. 5, Figs. 1913-1920; Fig. 989. Vertical posts between the top and bottom arch bars of a tender truck, primarily to stiffen the truck frame, but which serve as guides for the ends of the bolster. More commonly Column, which see.

Bolster Sandwich Plate. See Bolster Flitch Plate.

Bolster Springs. 4a, Figs. 1913-1920; Fig. 2060. The main springs of a tender, carried on the spring plank and supporting the truck bolster, on which the weight of the tender body rests.

Bolster Spring Cap. See Spring Plate.

Bolster Spring Seat. See Spring Plate.

Bolster Truss Rod. A bent rod secured at the ends of a tender truck bolster and bearing upon a saddle or king post. Two truss rods are commonly used.

Bolt. A pin, rod or bar of metal used to hold or fasten anything in its place. Ordinarily a bolt has a head on one end and a screw and nut on the other, while a rod has a nut on both ends. Various forms of bolts, which see for further definitions, are as follows: Carriage Bolt, Eye Bolt, Key Bolt, Strap Bolt or U-Shaped Bolt. For bolts whose names are derived from the purpose for which they serve, see Box Bolt, Column Bolt, Cylinder Head Bolt, Frame Bolt, Journal Box Bolt, Journal Box Cover Bolt, King Bolt or Center Pin, Patch Bolt, Saddle Bolt, Stay Bolt, Tire Bolt.

Bolt Head. The enlarged portion of a bolt at one end that comes in contact with the material through which the bolt is passed, and which prevents the whole bolt from going through the hole. The American Railway Master Mechanics' Association in 1899 adopted the following dimensions for square bolt heads as standard: The side of the head shall be one and one-half times the diameter of the bolt, and the thickness of the head shall be one-half the side of the head. See Screw Thread.

Boss or Hub (of a Steel-Tired Wheel). 3, Figs. 897-907. The central portion, through which the axle passes. Boss is the usual British term, but little used in the United States.

Bottom Arch Bar. 2, Figs. 1913-1920. An inverted arch bar. The pedestal tie bar is sometimes called bottom arch bar. See Arch Bar.

Bottom Bolster. A Truck Bolster, which see, is sometimes spoken of as the bottom bolster, while the body bolster is called the top bolster.

Bottom Brace (Engine Truck). A flat bar bolted on the bottom of the engine truck box jaws, and frequently called a Pedestal Binder or Pedestal Tie.

Bottom Truck Connection. The common name for a Brake Lever Coupling Bar.

Box Bearing. A Journal Bearing.

Box Bolt. (Diamond Trucks.) The bolts holding the journal box in place. More properly, Journal Box Bolts.

Box Cover. See Journal Box Cover or Lid.

Bix Guide. See Journal Box Guide and Pedestal.

Box Packing. See Journal Packing.

Box Steps. Tender or locomotive steps made with closed sides and backs, as distinguished from open steps which have an opening through the parts named.

Brace. An inclined beam, rod, or bar of a frame, truss, girder, etc., which unites two or more of the points where other members of the structure are connected together, and which prevents them from turning about their joints. A brace thus makes the structure incapable of altering its form from this cause, and it also distributes or transmits part of the strain at one or more of the joints toward the point or points of support, or resistance to that strain. A brace may be subjected to either a strain of compression or tension. See Boiler Brace, Back Head Brace, Throat Brace, Tube Sheet Brace, Frame Brace, Pilot Brace.

Bracket. An angular brace or stay to hold one piece at right angles to another. See Air Compressor Bracket, Bumper Bracket, Cab Bracket, Cylinder Lever Bracket, Headlight Bracket, Running Board Bracket.

On cast iron tender or truck wheels, the curved stiffening ribs cast on the inside of the plate are called brackets. See Wheel.

Bracket Nut. A small nut, turned by a Spanner Wrench.

Brake. The whole combination of parts by which the motion of the locomotive or train is retarded or arrested. The Foundation Brake Gear, which see, includes all of the parts by which the pressure of the air in the brake cylinder is transmitted to the wheels. See Air Brake, Automatic Air Brake, Brake Beam, Brake Lever, Continuous Brake, Driver Brake, Engine Truck Brake, Foundation Brake Gear, High-Speed Brake Gear, Quick Action Brake, Straight Air-Brake, Vacuum Brake.

Brake Beam. 10, Fig. 1554; Figs. 1960-1991. A transverse beam of iron, steel or wood, often strengthened by a truss and carrying a brake head and shoe at each

end, by means of which the pressure in the brake cylinder transmitted through the brake levers is conveyed to and equally distributed on the treads of both wheels on an axle. The brake beams are sometimes hung from the underframe or the truck frame outside of the wheels, and are called outside hung, but more commonly between the wheels, in which case they are called inside hung.

Brake Beam Adjusting Hanger. 17, Figs. 1913-1920. A link sometimes attached to a brake beam to cause the latter and the brake head and shoe to maintain the same relative positions when the brakes are released, so as to prevent the ends of the brake shoes from coming in contact with the wheel when the brakes are released. It is attached to the truck transom or truck bolster in tender trucks, by a projecting brake beam adjusting hanger carrier, and to the brake beam by an eye or clip. Sometimes called a parallel brake hanger.

Brake Beam Adjusting Hanger Carrier. See above.

Brake Beam Eye Bolt. Properly an eye bolt for fastening a lower brake rod to a wooden brake beam. It has threads cut nearly its entire length, and usually a nut is placed on each side of the brake beam, which may be adjusted to take up the wear of the brake shoes.

Brake Beam Fulcrum. Figs. 1591, 1988. See Brake Lever Fulcrum. A brake beam king post or strut is frequently called a brake beam fulcrum.

Brake Beam Hanger. 11, Figs. 1913-1920. A rod or bar by which a brake beam is hung or suspended from a tender truck. More commonly, Brake Hanger, which see. See also Brake Beam Adjusting Hanger.

Brake Beam King Post. A strut or distance piece which forms a bearing for the truss rod of a brake beam. In metal brake beams the brake lever is attached to it, and it then becomes a brake lever fulcrum.

Brake Beam Safety Chain. A Brake Safety Chain.

Brake Beam Safety Chain Hanger. See Brake Safety Chain Eye Bolt.

Brake Beam Strut. A Brake Beam King Post.

Brake Beam Support. See Brake Hanger.

Brake Beam Truss Rod. A rod used to strengthen a brake beam.

Brake Block. Another name for a Brake Head, which see. Brake block is the usual British term for the combined brake head and shoe. The two are often combined in one piece in British practice, no removable shoe being used.

Brake Carrier. See Brake Hanger Carrier.

Brake Chain Connecting Rod. An iron rod connecting the brake chain to one of the brake levers, usually the floating lever.

Brake Clevis. A Brake Lever Fulcrum.

Brake Connecting Rod. More properly, Brake Chain Connecting Rod.

Brake Connection. 8, Fig. 1554. A Brake Rod, which see. A round iron rod, usually made with jaws on the ends to fit over the brake levers. They transmit the pressure on the brake cylinder piston from one brake lever to another and finally to the brake shoes. The rods take their names from the brake lever to which they are attached, which is farthest from the cylinder.

Brake Cut-out Cock. See Cut-out Cock.

Brake Cylinder. (Air Brake.) 60, Figs. 101-140; Figs. 1444-1446. A cast iron cylinder attached to the frame of the tender or locomotive, or to the locomotive forward truck. It contains a piston which is forced outwardly by compressed air to apply the brakes, and when the air pressure is released the piston is returned to its normal position by a release spring coiled about the piston rod inside the cylinder. On locomotives, tenders and passenger cars the brake cylinder is fitted with two heads, the pressure head and the non-pressure head, while in the freight brake the end of the auxiliary reservoir forms one head of the brake cylinder. The piston rod of the engine brake cylinder has a crosshead at its outer end, to which is attached the cylinder lever. The piston rod of the freight brake cylinder, as well as that of the tender brake, is hollow and loosely encloses a push rod which is attached to the cylinder lever. The driver brake cylinder is attached either to the frame back of the driving wheels, or to one of the crossties or to the guide yoke.

Brake Cylinder (Cleaning). See Air Brake and Train Air Signal Instructions.

Brake Cylinder Bracket. 9, Fig. 1572. A plate or bar of steel riveted to the under side of a tender frame and having holes for bolts to secure the brake cylinder. Also the bracket used to support the air cylinder on a locomotive. See Brake Cylinder Plate.

Brake Cylinder Lever. (Tender Brake.) 5 and 6, Fig. 1562. One of two levers which are connected together by a tie rod attached near their centers. One end of one lever is attached to the crosshead of the brake cylinder, and the corresponding end of the other is attached to a bracket on the brake cylinder head at the opposite end of the cylinder. The other ends of the levers are connected with the floating lever by rods.

Brake Cylinder Pipe (Air Brake). The pipe that connects the brake cylinder with the triple valve.

The pipe that connects the distributing valve with all the brake cylinders in the Westinghouse E T locomotive brake equipment.

Brake Cylinder Piston Rod. 3, Fig. 1562. A piston rod attached to a piston in a brake cylinder for locomotive driving, trailing, truck or tender wheels. See Push Rod.

Brake Cylinder Plate (Air Brake). Fig. 545. The steel plate to which the brake cylinder is bolted and by which it is attached to the tender sills.

Brake Cylinder Push Rod. See Brake Cylinder Piston Rod and Push Rod.

Brake Cylinder Support. See Brake Cylinder Plate.

Brake Dog. See Brake Pawl.

Brake Equalizer. See Floating Lever.

Brake Eye Bolt. See Brake Beam Eye Bolt.

Brake Finger. See Brake Pawl.

Brake Gear. See Air Brake Standards, Drive Brake, Foundation Brake Gear, Tender Brake, Truck Brake.

Brake Hand Wheel. A wheel secured to a shaft around which a brake chain is wound to apply the tender brakes by hand. Not commonly applied now.

Brake Hanger. 18, Figs. 1032-1033; 25, Figs. 997-1000; Fig. 1005. A link or bar by which brake beams and attachments are suspended from a truck or tender frame. It is attached to the truck or to the frame of the locomotive or tender by a brake hanger carrier. Brake hangers are distinguished as hooked, linked and U-shaped. Best practice locates this hanger so as to have the brake shoes a predetermined height above the rail, thus in-

suring the same piston travel, regardless of whether the tender is empty or loaded.

(British.) A wrought iron bar by which the brake block is suspended. No brake beam is commonly used.

Brake Hanger Bolt. A bolt which fastens the brake hanger to the brake hanger carrier.

Brake Hanger Carrier. An eye or U-bolt, a casting or other fastening by which a brake hanger is attached to the truck.

Brake Hanger Pin. A pin passing through the brake hanger carrier and the brake hanger.

Brake Head. 27, Figs. 997-1000; Figs. 1614, 1630-1632. A metal casting secured to the end of a brake beam or hanger to hold a brake shoe. In Great Britain the brake head and shoe are commonly made in one piece, and called a brake block.

Brake Head Adjusting Spring. 28, Figs. 997-1000. A spring attached to the brake head for the purpose of holding the shoe in proper position, and still allowing yield enough to permit automatic adjustment to the face of the wheel. Also called balance spring.

Brake Hose. See Air Brake Hose.

Brake Hose Coupling. See Hose Coupling.

Brake Hose Coupling Case. See Hose Coupling Case.

Brake Hose Nipple. See Hose Nipple.

Brake Lever (Air Brake). 204, Figs. 101-140. 19, Figs. 997-1000; 14, Figs. 1032-1033; Fig. 1584. A general term, including all the levers in the Foundation Brake Gear, which see. See also Dead Lever, Live Lever, Cylinder Lever, Truck Brake Lever.

Brake Lever Bracket. A wrought iron knee on the under side of a tender, to which the fulcrum of a brake lever is sometimes attached.

Brake Lever Bracket Brace. A diagonal wrought iron brace to stiffen the brake lever bracket.

Brake Lever Connecting Rod. An iron rod connecting the floating levers operated from the tender brake cylinder. See Brake Cylinder Lever.

Brake Lever Coupling Bar (Inside Hung Brakes). 14, Figs. 1913-1920. A compression bar connecting the two brake levers (dead lever and live lever), to which it is fastened by coupling bar pins. When the brakes are outside hung, this member becomes in tension instead of compression, and is known as the lower brake rod. It is usually called bottom truck connection.

Brake Lever Fulcrum. 20, Figs. 997-1000. Fig. 1591. A forked iron attached to the brake beam, by means of which a brake lever is connected to the beam. In the trussed metal brake beams the king post of the brake beam becomes the brake lever fulcrum. See Brake Beam King Post.

Brake Lever Guide. 15, Figs. 1032-1033. An iron bar which guides the upper end of a brake lever. Further distinguished as live lever and dead lever guides, the latter provided with pins for adjustment as the brake shoes wear; also called a brake lever stop.

Brake Lever Jaw. A Brake Lever Fulcrum.

Brake Lever Pin or **Brake Pin.** Figs. 1583, 1585. A small metal pin used in the brake lever connections.

Brake Lever Spring. See Release Spring.

Brake Lever Stop. 15, Figs. 1913-1920. An iron bar or loop attached to a truck or tender frame, and which holds the upper end of a fixed or dead brake lever. It usually has holes in it, in which a fulcrum pin is inserted. By moving the pin from one hole to another the lever is adjusted so as to take up the wear of the brake shoes. More commonly called Dead Lever Guide.

Brake Lever Strut. A brake lever coupling bar or Bottom Truck Connection.

Brake Lever Thrust Bar. A bar connecting the live and dead levers of the brake rigging of a tender by which the thrust of the live lever is communicated to the other and thence to the shoe.

Brake Lever Tie Rod. 4, Fig. 1562. A rod connecting the two brake cylinder levers at a point between the ends of each. Also called cylinder lever connection.

Brake Mast. See Brake Shaft

Brake Pawl. A small pivoted iron bar for engaging in the teeth of a Brake Ratchet Wheel, which see. It is placed in such a position as to be worked in and out of engagement with the ratchet wheel teeth by the foot.

Brake Pin. See Brake Lever Pin.

Brake Pipe (Air Brake). Figs. 1400, 1402-1410, 1485-1494. An iron pipe connecting the engineer's brake valve on the locomotive with the brake apparatus on all the cars in the train, and connected between adjoining cars by flexible hose couplings. The air from the air compressor or motor-compressor is conveyed from the main reservoir through the engineer's brake valve to the triple valve and auxiliary reservoir under each car. The brake pipe and auxiliary reservoirs contain air at normally the same pressure, which is 70 pounds for ordinary service, 90 pounds for high pressure freight service and 110 pounds for high speed passenger service. A reduction of the pressure in the brake of from 5 to 20 pounds, made by opening a small port in the engineer's brake valve to the atmosphere, causes the triple valves to close communication between the brake pipe and the auxiliary reservoir and to open communication from the auxiliary reservoirs to the brake cylinder. The compressed air stored in the auxiliary reservoir acts on the cylinder piston and applies the brakes. This is called a service application. In an emergency when it is desired to stop quickly, the engineer's brake valve is thrown to the emergency position and quickly returned to lap position. This gives a sudden reduction in the brake pipe pressure, which throws the triple valve slide valve to its extreme or emergency position. Air is admitted to the brake cylinder from the auxiliary reservoir, and also from the brake pipe through the emergency port, giving additional volume of air and therefore higher cylinder pressure. An emergency application travels throughout the length of the train with great rapidity. In case a hose bursts the pressure is suddenly released in the brake pipe, and the brakes are applied in the same manner, but with less force, since there is no air in the brake pipe to help out the auxiliary reservoirs. An emergency check valve is provided in the triple valves to prevent air from flowing back from the brake cylinders to the brake pipe when the emergency port is opened due to a broken hose. To release the brakes after either an emergency or service application, the brake pipe pressure is raised, and the triple valves are thereby forced to the release position connecting the brake pipe to the auxiliary reservoir and the brake cylinder with the atmosphere. The auxiliary reservoirs are then recharged with air at the brake pipe pressure, and the cylinder pressure is released. This pipe is sometimes called train pipe, train line, or train brake

pipe, but its proper name is brake pipe, to distinguish it from the signal and steam heating pipes. See TRIPLE VALVE.

Brake Pipe Air Strainer. A wire strainer inserted in the brake pipe to prevent foreign matter from entering the brake apparatus on a locomotive or tender.

Brake Pull Rod Safety Hanger. A metal loop or eye attached to a truck and through which the lower brake rod passes. It is intended to prevent the brake rod from falling on the track in case it or its connections should break. Not commonly used.

Brake Ratchet Wheel. A wheel attached to a brake shaft, having teeth shaped like saw teeth, into which a pawl engages, thus preventing the wheel and shaft from running backward.

Brake Rod. Any rod serving to connect brake levers.

Brake Rod Guide. Any form of special support for a brake rod.

Brake Safety Chain or Link. 18a, Figs. 1913-1920. A chain attached by brake safety chain eye bolts to a brake beam and to the truck. It is intended for the same puporse as a BRAKE SAFETY STRAP, which see, to hold the brake beams in case a brake hanger breaks. Sometimes made of a single link. A brake beam safety guard is not bolted or fastened to the brake beam, but is usually a T-shaped forging, the stem being bolted to the truck frame, the cross bar hanging under the brake beam to prevent it from falling upon the track if the hanger breaks.

Brake Safety Chain Eye Bolt. An eye bolt attached to a tender truck or tender frame, and which holds a brake safety chain.

Brake Safety Strap. A strap of iron fastened to the end piece or transom of a tender truck and bent into such a shape as to partially surround the brake beam. In case any of the hangers should give way, the safety strap is intended to catch and hold the beam and prevent it from falling on the track. Sometimes it is made of steel and used as a release spring for throwing off the brake. A BRAKE SAFETY CHAIN, which see, is another device for the same purpose.

Brake Shaft. 14, Fig. 1562. A vertical iron shaft on which a chain is wound and by which the power of a hand brake is applied to the wheels of a tender.

Brake Shaft Arm. A lever fastened horizontally on top of the brake shaft for turning it and applying the brake. Sometimes used instead of a brake hand wheel.

Brake Shaft Bearing. A metal eye by which a brake shaft is held in its place, and in which it turns.

Brake Shaft Casing. A tube or slot in which a tender brake shaft is enclosed.

Brake Shaft Chain. 13, Fig. 1562. A chain connecting the brake shaft with the brake levers through the brake chain connecting rods, to the end of which it is attached. The force exerted on the shaft is transmitted by this chain.

Brake Shaft Chain Sheave. A roller or pulley over which a brake shaft chain passes.

Brake Shaft Connecting Rod. 8, Fig. 1562. A rod which is attached at one end to a brake shaft chain and at the other to one of the levers in the foundation brake gear.

Brake Shaft Pawl. See BRAKE PAWL.

Brake Shaft Step. 11, Fig. 1562. A bearing which holds the lower end of the brake shaft. It usually consists of a U-shaped bar of iron, the upper ends of which are fastened to the tender end sill, with a hole in the curved part of the bar which receives the end of the shaft.

Brake Shaft Step Brace. A wrought iron brace attached to the brake shaft step to resist the pull of the brake chain.

Brake Shoe. 26, Figs. 997-1000; 16, Figs. 1032-1033. A piece of metal shaped to fit the tread of a wheel and attached by a key or otherwise to a brake head. The brake shoe rubs against the tread of the wheel when the brakes are applied. Such shoes are made of cast, wrought or malleable iron, or steel. Shoes for driving and engine truck wheels are usually flanged and wear on both the tread and flange of the wheels. Shoes for tender truck wheels wear on the tread of the wheel only.

Brake Shoe Key. Fig. 1594. A flat wedge-shaped piece of iron or steel inserted in a brake head to hold the shoe in place.

Brake Slack Adjuster. Fig. 1561. A device to automatically take up any slack in the brake gear between the air brake cylinder and the brake shoes, so that the piston travel shall not be too great.

Brake Staff. See BRAKE SHAFT.

Brake Strut. 14, Figs. 1913-1920. A compression bar or strut between the live and dead levers of a truck with inside hung brakes. Probably the term brake strut is more common than brake lever coupling bar. Brake strut should not be confused with brake beam strut.

Brake Valve (Air Brake). The valve by which the engineer operates the brakes. The proper name is ENGINEER'S BRAKE VALVE.

Brake Wheel. An iron wheel attached to the upper end of the brake shaft by which the latter is turned to apply the brakes by hand. A brake hand wheel.

Branch Pipe. A common name for TEE HEAD.

Brass. An alloy of copper and zinc, commonly used to designate a journal bearing.

Brick Arch. 60, Figs. 152-186; Figs. 275-280, 287. A baffle of fire brick units set in a firebox in an inclined position and extending backward from a horizontal line on the tube sheet just below the tubes. By virtue of its position the firebox space is divided into two compartments, a furnace chamber and a combustion chamber. Its purpose is to promote combustion, force the flames to impinge the back surfaces of the firebox, baffle sparks, abate smoke and protect flues.

Brick Arch Stud. A bolt or fastener for holding a brick arch in position.

A nipple or short threaded pipe, screwed into the crown sheet or tube sheet for connection to a brick arch tube.

Brick Arch Tube. See ARCH TUBE.

Bridge. (Valve.) 37, Figs. 579-605. 56, Figs. 648-761. In a locomotive valve chamber or valve seat, the solid spaces or portions of the valve seat between any two ports are called bridges.

(Firebox.) Figs. 278-280. A fire-brick wall built across a firebox in front of the tube sheet and frequently used to support the front end of the brick arch. It forms a combustion chamber in front of the tube sheet and protects the ends of the tubes from the direct heat of the fire. Also called bridge wall.

Bridge Pipe. 100, Figs. 101-140. A pipe conveying steam from the dome to the turret in the cab. Sometimes called TURRET DRY PIPE. See CAB TURRET.

Briggs Standard Wrought-Iron Pipe Threads. At the convention of 1899, what is known as the Briggs Standard, as determined by the Pratt & Whitney gages, of threads for wrought-iron pipe and couplings, was adopted as a standard of the American Railway Master Mechanics' Association.

The gages used by the Pratt & Whitney Company were made by them from an autograph copy of a table made by Mr. Robert Briggs personally, who originally established and published these standard threads. In 1909 these dimensions were revised and 11 in. and 12 in. pipe included. The word "wrought pipe" in the above heading includes wrought iron and steel pipe.

STANDARD DIMENSIONS OF WROUGHT-IRON WELDED TUBES. BRIGGS STANDARD.

Diameter of tube.				Screwed ends.	
Nominal inside. Inches.	Actual inside. Inches.	Actual outside. Inches.	Thickness of metal. Inch.	Number of threads per inch. No.	Length of perfect screw. Inch.
⅛	0.269	0.405	0.068	27	0.19
¼	0.364	0.540	0.088	18	0.29
⅜	0.493	0.675	0.091	18	0.30
½	0.622	0.840	0.109	14	0.39
¾	0.824	1.050	0.113	14	0.40
1	1.047	1.315	0.134	11½	0.51
1¼	1.380	1.660	0.140	11½	0.54
1½	1.610	1.900	0.145	11½	0.55
2	2.067	2.375	0.154	11½	0.58
2½	2.467	2.875	0.204	8	0.89
3	3.066	3.500	0.217	8	0.95
3½	3.548	4.000	0.226	8	1.00
4	4.026	4.500	0.237	8	1.05
4½	4.508	5.000	0.246	8	1.10
5	5.045	5.563	0.259	8	1.16
6	6.065	6.625	0.280	8	1.26
7	7.023	7.625	0.301	8	1.36
8	7.981	8.625	0.322	8	1.46
9	8.937	9.625	0.344	8	1.57
10	10.018	10.750	0.366	8	1.68
11	11.000	11.750	0.375	8	1.79
12	12.000	12.750	0.375	8	1.90

Tapers of conical tube ends, 1 in 32 to axis of tube. (¾-inch per foot.)

By the late action of the manufacturers of wrought-iron pipe, 9-inch outside diameter has been excepted from the original list, as above noted, the diameter now adopted being 9.625 instead of 9.688 inches given in the Briggs table.

Broad Gage. A term applied to a gage when the distance between the head of the rails is greater than 4 ft. 9 in. The principal broad gage was 5 ft.; other gages were 5 ft. 3 in., 5 ft. 6 in., 6 ft., etc. These gages have been abandoned and the 4-ft. 8½ in. or 4-ft. 9 in. gage adopted throughout this country on all lines. The broad gages, if any exist, are confined to short branches of no importance. Tracks of 4-ft. 8½-in. and 4-ft. 9-in. gage allow cars and locomotives which are gaged by standard methods to pass over them. See Narrow Gage, Standard Gage.

Bronze. An alloy composed of copper and tin, sometimes with a little zinc and lead. Bronzes also often contain various other metals and chemical substances, as phosphor bronze. Brass is an alloy of copper and zinc. Most journal bearings are bronzes. The variety of proportions of the various metals is very great.

Broom Holder. A bracket usually placed under the cab roof or back of the cab to hold a broom.

Brush. A piece or plate of carbon or copper held in contact with the commutator of a motor or dynamo for conveying electricity to or from the armature.

Brush Holder. 3, Fig. 2164. A metal bracket or support attached to the frame of an electric motor or dynamo, but insulated from it, for holding one or more brushes in contact with the commutator. Brushes are usually secured in the holder by clamps and nuts, and their contact with the commutator is insured by springs which press the brushes against it.

Buckle Plate. See Expansion Knee.

Buffer. Fig. 1896. An elastic apparatus or cushion attached to the rear of a tender to receive the concussions of the cars against it. The term is generally applied to those attachments in which springs are used to give the apparatus elasticity.

Buffer Bolt. The stem or shank attached to the head of a buffer. More commonly buffer stem.

Buffer Casting. Fig. 1862. A casting bolted to the bumper beam or end plate (used on electric locomotives) for the purpose of holding the buffer springs in place.

Buffer Flange. A cast iron or cast steel pocket, shaped like a cylinder or like the frustum of a cone, with a flat base secured to a tender end sill and containing the spring and the stem or bolt of a buffer. Two are used, one on either side of the coupler. Also called buffing spring chamber.

Buffer Head. A circular steel cup enclosing a buffer spring forming the outer surface of a buffer. Also called buffer cap.

Buffer Plate. Fig. 1869. An iron or steel plate, bolted to buffer stems, used on electric locomotives to bear and rub against the opposing plate on the car to which the locomotive is attached.

Buffer Spring. The spring that resists the compression of a train when it comes against the tender in coupling. This thrust is frequently not taken by the drawbar alone, but by the buffers which transmit it to the buffer springs, which absorb or transmit it to the tender frame.

Buffer Spring Bolt. A heavy rod or pin passing through a buffer spring and holding it in place. See Buffer Bolt.

Buffer Stem. The round or square bar which passes through the buffer springs and serves to guide the buffer plate.

Built-up Crank Axle. Fig. 912. See Crank.

Bull Ring (Piston). See Piston T-Ring.

Bull's Eye. A convex lens, which is placed in front of a lamp to concentrate the light so as to make it more conspicuous for a signal.

Bull's-Eye Lamp. See Train Signal Lamp.

Bumper or Bumper Beam. 15, Figs. 101-140; 4, Figs. 1052-1056; Figs. 1059, 1065-1070. A piece of timber or an iron or steel casting, secured across the frames of a locomotive or tender, to absorb shocks due to coupling or other collisions, and to provide a support for the coupler or draft gear. A pilt beam is the term applied to the same part when the locomotive is fitted with a pilot. See Back Bumper and End Sill.

Bumper Angle. 2, Figs. 1052-1056. A right angled iron bracket for securing a bumper beam to the side frames or sills. Usually made of cast iron.

Bumper Bar. A metal rod or a piece of pipe secured by brackets or posts to an engine or tender bumper for use as a handhold for a person standing on the bumper step.

Bumper Brace. 145 and 203, Figs. 101-140. An iron brace bolted to the pilot or bumper beam at one end and the smokebox at the other. Also called boiler brace.

Bumper Bracket. Figs. 528, 572. A casting forming a crosstie between the two main frames and to which the bumper or pilot beam is attached.

Bumper Channel. 15, Figs. 101-140. A steel channel used on a bumper of the built-up type.

Bumper Clamp. The extension of the front frame to two pieces at right angles and bolted to the bumper.

Generally made in a separate casting or forging and bolted to the frame and bumper beam.

Bumper Crosstie. A transverse frame brace directly back of the bumper or pilot beam and bolted to it.

Bumper End Block. 56, Fig. 2145. A heavy casting bolted to the corner of the frames on electric locomotives to protect the projecting parts of the machine back of it and to serve as a push pole pocket. It also serves to strengthen the frames at the point of attachment.

Bumper Filling Piece. See Bumper Plate.

Bumper Frame Bracket. 2, Fig. 1053. A bracket or right angle casting for securing the bumper beam to the frames. See Bumper Angle.

Bumper Knee. See Pilot Bracket.

Bumper Plate. 218, Figs. 101-140. An iron plate extending across the frames and covering the space between the bumper beam and the cylinder saddle. Also called front platform.

Bumper Plate Bracket. A bracket bolted to the frames or bumper beam to serve as a support for the bumper plate. Sometimes called bumper plate support.

Bumper Roller. 1, Fig. 144. A small roller on the bumper to prevent chafing friction. Used on pushing locomotives on steep grades.

Bumper Step. 197, Figs. 101-140. A wooden plank hung by iron brackets from the bumper beam of locomotives not provided with pilots. Also used on the back bumper of the tenders of yard or switch engines. In both cases it is intended to assist yardmen and switchmen in getting on and off the engine while making up trains, etc.

Bumper Step Hanger. A flat strip of iron bolted to the engine or tender bumper beam to hold a bumper step.

Bumper Step Hanger Brace. A piece of iron riveted to a step hanger at the lower end and bolted through the bumper beam at the upper end to stiffen the hanger.

Burner. "That part of a lighting apparatus at which combustion takes place."—Knight. See Headlight Burner, Lamp Burner.

Bus, or Bus Bar. A metal rod or bar, for conveying electric energy. A conductor. The term is commonly applied to conductors leading from generators, motors, storage batteries, switchboards or rheostats.

Bushing. "A lining for a hole."—Knight.

Usually a metal cylindrical ring which forms a bearing for some other object, as a shaft, valve, etc., which is inserted into the hole. Often contracted into bush.

(Pipe Fittings.) A short tube with a screw cut inside and outside, used to screw into a pipe to reduce its diameter. Generally, a bushing has a hexagonal head by which it is turned, and is sometimes called reducer. See Bell Cord Bushing, Cylinder Bushing, Rocker Bushing, Steam Chest Bushing.

Butt Hinge. A hinge for hanging doors, etc., which is fastened with screws to the edge of a door, so that, when the latter is closed, the hinge is folded up between the door and its frame. A hinge the two parts of which are fastened together so that they cannot readily be detached is called a fast joint butt hinge.

Butt Joint (Riveting). Figs. 205-211, 214-217. A form of connection for fastening together the ends of a boiler plate or of two plates. The edges of the plate are brought together, but not overlapped, and a strip or welt is then riveted to both plates on the inside and outside, covering the joint and holding the ends of the plate or plates firmly together. The longitudinal seams in locomotive boilers are made with butt joints. In some designs only one welt is used.

By-Pass Valve. See Cylinder By-Pass Valve.

C

Cab. 199 and 134, Figs. 101-140; Figs. 1109-1155. A shelter built of wood or sheet steel, enclosing the back end of the boiler for the protection of the enginemen. On locomotives having broad (Wootten) fireboxes, two cabs are frequently built; one on the waist of the boiler like a saddle; the other, much smaller, to shelter the fireman at the back end. With the latter type, a roof on the forward end of the tender is frequently used, the tender cab roof being slightly lower than that on the engine. See Locomotives, Inspection and Testing.

Cab Apron. 211, Figs. 101-140. A flat iron plate hinged to the back end of the foot plate or deck to cover the connection between engine and tender, and thus make a safe standing place.

Cab Apron Hinge. 212, Figs. 101-140. A rod hinge from which the apron is hung so that the latter may adjust itself to the varying heights of the engine and tender.

Cab Apron Hinge Link. A bar or link supporting the cab apron hinge.

Cab Apron Strap. A strip of iron pivoted on the hinge and fastened to the cab apron.

Cab Brace. 234, Figs. 101-140. A metal support fastened to the boiler to hold a cab. See Cab Bracket.

Cab Bracket. 9, Figs. 1110-1143; Figs. 1117-1120. A support bolted to the back end of the main frame and foot plate, and transversely thereto, to support the cab.

Cab Corner Brace. A metal post or column fastened to the rear corner of a cab, and to the back bumper on each side of a locomotive.

Cab Corner Iron. A steel angle forming the corners of a cabe frame, distinguished as front or back cab corner iron, according to its location.

Cab Door. 1, Figs. 1149-1150. The movable partition which closes the opening in the front of a cab leading out to the running board. It is usually hinged to swing outward and has glass in the upper panel. Cab back doors are sometimes used to close the opening between the cab and tender, but generally a curtain is used.

Cab Door Bracket. A projection on the front or back of a locomotive cab, to hold a hinge or pivot for a door.

Cab Door Clamp. See below.

Cab Door Fixture. A device for holding a cab door in any desired position, consisting of a sliding piece fastened to the door, which piece runs on a rod passing through it and is pivoted at one end to the door frame. A clamp holds the sliding piece on the rod in any desired position and prevents the door from opening or closing.

Cab Door Fixture Slide. See above

Cab Door Fixture Thumb Screw. Fig. 1150. A screw having a milled or knurled head binding the jaw and slide so that neither can move. See above.

Cab Door Handle. 14, Figs. 1110-1143. A knob or bent piece of metal grasped by the hand to open and shut a cab door.

Cab Door Slide. 6, Figs. 1149-1150. A strip of metal on either the floor or on the under side of the upper frame or plate of a cab to form a runway or rail on which the cab door slides.

Cab Door Slide Rod. See Cab Door Fixture.

Cab Fittings. Figs. 1220-1241. The special devices on and near the boiler head under the direct control of the engineman. These include the steam gage, sight-feed lubricator, air pump throttle valve, blower valve, steam heat valve, air gage, cylinder cock handle, sander handle, bell ringer, injector valves, gage cocks, water gage, throttle, reverse lever, air signal whistle, cab lamp, etc.

Cab Floor Beam (Electric Locomotive). One of several transverse steel I-beams or channels forming part of the floor frame of the cab of an electric locomotive.

Cab Gangway Chain. A chain hung across the space between the cab and tender, as a protection to the fireman.

Cab Handhold. 159, Figs. 101-140; Fig. 1137. A rod or handhold on the back of the cab to assist the men in mounting or getting off an engine.

Cab Handle Post. A rod or handhold secured to the cab at one end and to the end of the back bumper, or tail piece, at the other. See above.

Cab Knee. See Cab Bracket.

Cab Lamp. Figs. 1719-1722. Often called gage lamp. A lamp mounted on the back head of the boiler to illuminate the face of the steam, water and air gages. See Rule 32, Locomotives, Inspection and Testing.

Cab Panel. See Cab Sheet.

Cab Saddle. Fig. 1113, 1125. A steel plate or casting fitted at right angles to the outside firebox and roof sheet of the boiler and extending across from one running board to the other to serve as a support for the front of the cab.

Cab Seat. 1, Figs. 1110-1143; Fig. 1127. A box or shelf, usually covered with a cushion, built on each side of the cab for the engineman and fireman to sit on.

Cab Seat Frame. A metal frame, fastened inside the cab of a locomotive, to hold a hinged or folding seat for the engineman or fireman.

Cab Sheet. Any plate forming part of a steel cab.

Cab Sides. The metal plates or wooden panels and posts forming the sides of a locomotive cab.

Cab Step. 229, Figs. 101-140. A step secured on each side of an engine, to each end of the bumper, to enable the enginemen to mount and dismount.

Cab Strap. A piece of iron or steel bent at right angles and riveted to the side of a cab and to the foot plate, to secure the cab to the foot plate or frame.

Cab Support (Electric Locomotive). 7, Fig. 2148. One of several vertical projections cast on the top bar of the frame of an electric locomotive to support the structure of the cab.

Cab Turret. 137, Figs. 101-140. A distributing chamber or steam head secured on top of the boiler, usually inside the cab, having one main valve for opening or closing communication with the steam in the boiler and a number of outlets, tapped for pipe connections, by means of which a steam supply can be taken off the injectors, air compressor, blower, steam heat, etc. Also called turret, fountain or combination stand.

Cab Turret Dry Pipe. 100, Figs. 101-140. A pipe from the cab turret connection running longitudinally through the boiler and taking steam from the dome. Also called bridge pipe.

Cab Turret Flange. A flanged casting on the turret base for securing it to a fitting screwed into or riveted to the boiler shell.

Cab Turret Valve. A valve forming an integral part of the turret, seated by means of a stem turned by a handle or hand wheel, and which, when closed, shuts off all steam supply from the auxiliary devices mounted on the back head of the boiler. Also called bridge pipe valve and main steam valve.

Cab Ventilator. 34, Figs. 1110-1143; 136, Figs. 101-140; Fig. 155. A hinged door in the roof of the cab or in the front over the boiler, to allow a circulation of air.

Cab Window. 181 and 182, Figs. 101-140; Fig. 1138. An opening in the side or back of the cab, closed with a pane of glass mounted in a frame or sash.

Cab Window Slide. A strip of wood or metal placed lengthwise on the side of a cab to form a groove or channel in which the cab windows slide back and forth.

Cab Window Ventilator. Figs. 1114, 1115. A ventilator applied to a cab window.

Cable. 34, Fig. 2127. A flexible insulated conductor for electric current.

Cam Driver Brake. A form of brake for locomotive driving wheels, now rapidly going out of use. A vertical brake cylinder is mounted on the frame between two driving wheels and the piston rod is connected at its bottom end by links to two cam levers, carrying the driver brake shoes which are suspended by hangers from the engine frame. The cam levers form a powerful toggle and when the piston rod is forced down, the levers are forced out and apply the brake shoes to the wheels.

Cam Nut Wrench (Air Brake). A special double nut spanner wrench used for adjusting the cams and taking up the slack of the cam driver brake.

Camber. The deflection or bend of a beam, girder, or truss.

Cap. The top or covering of anything. See Dome Cap, Sand Box Cap.

Carline or **Carling.** 240, Figs. 101-140. A transverse bar of wood or iron which extends across the top of a cab roof from one side to the other, and which supports the roof boards.

Carriage Bolt. A bolt made square under the head so as to prevent it from turning when in its place. They usually have button-shaped heads and are used for fastening wooden pieces together.

Carry Iron. See Drawbar Carry Iron

Case. A covering or box. See Hose Coupling Case, Spring Case.

Casing. 92, Figs. 101-140. A thin sheet-metal covering for the boiler, dome, sand box, cylinders and steam chest, to hold the lagging or insulation in place and protect it from injury. See Jacket.

Casting. Any piece of metal which has been cast in a mold. See Cylinder Castings.

Cast Iron Wheel. See Wheel.

Castle Nuts, Cotter Pins and Location of Cotter Pin Holes in Projecting Bolt Ends.—At the 1909 convention of the American Railway Master Mechanics' Association a series of dimensions was submitted by

a committee and on reference to letter ballot was adopted as standard. In 1914 a modification of the standard proportions of castle nuts was made to provide for steel nuts, with the height of the United States standard for rough nuts. The present standards are shown in the accompanying table and cover the following:

1. A series of castle nuts having U. S. standard threads.
2. A series of thin castle nuts having U. S. standard threads.
3. A series of special thin castle nuts having outward proportions the same as thin castle nuts, but having a special number of threads.
4. Rough nuts with diameters across the flats as shown. These dimensions correspond with U. S. standard dimensions for hexagon nuts. Finish of flats to be obtained by grinding and buffing, or by milling, the same practice as obtains in the case of U. S. standard nuts.
5. Finished nuts to have facing washer on bottom with dimensions as shown; rough nuts to have bottom corner slightly chamfered.
6. A series of standard cotter pins.
7. A series of Player cotter pins.
8. A series of taper pins.
9. Projecting bolt ends with cotter-pin hole location.

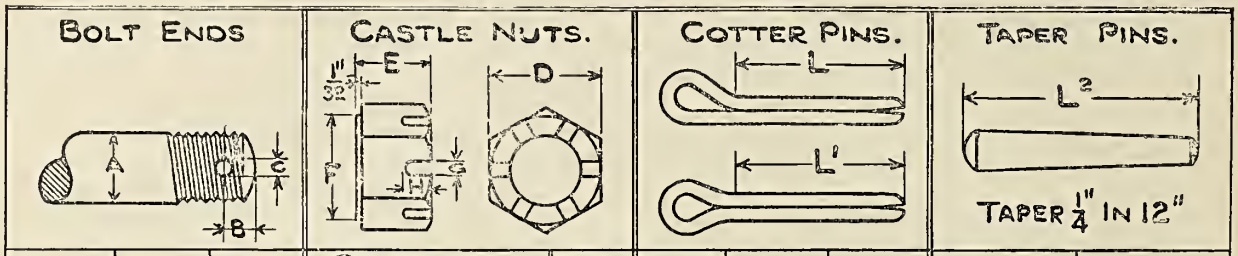

A	B	C	Standard D	Standard No. Threads	Standard E	Standard F	Standard G	Standard H	Thin E	Thin No. Threads	Nominal Diameter	L	L'	Number	L²
1/2	3/8	3/16	7/8	13	3/4	13/16	1/4	3/8			3/16	7/8	1 1/4	2	1 1/4
5/8	"	"	1 1/16	11	13/16	1"	"	"			"	1"	1 1/2	"	"
3/4	"	"	1 1/4	10	7/8	1 3/16	"	"			"	1 1/4	1 3/4	"	1 1/2
7/8	9/16	1/4	1 7/16	9	15/16	1 3/8	5/16	9/16			1/4	1 1/2	2"	4	1 3/4
1"	"	"	1 5/8	8	1"	1 9/16	"	"			"	"	"	"	2"
1 1/8	1/2	5/16	1 13/16	7	1 1/8	1 3/4	3/8	1/2	1 1/16	8	5/16	1 3/4	2 1/4	6	2 1/4
1 1/4	"	"	2"	7	1 1/4	1 15/16	"	"	1 1/8	"	"	"	2 1/2	"	"
1 3/8	"	"	2 3/16	6	1 3/8	2 1/8	"	"	1 3/16	"	"	2"	"	"	2 1/2
1 1/2	"	"	2 3/8	6	1 1/2	2 5/16	"	"	1 1/4	"	"	"	3"	"	2 3/4
1 5/8	"	"	2 9/16	5 1/2	1 5/8	2 1/2	"	"	1 5/16	"	"	"	"	"	3"
1 3/4	9/16	3/8	2 3/4	5	1 3/4	2 11/16	7/16	9/16	"	"	3/8	2 1/2	3 1/2	"	3 1/4
1 7/8	"	"	2 15/16	5	1 7/8	2 7/8	"	"	1 3/8	"	"	"	"	"	"
2"	5/8	"	3 1/8	4 1/2	2"	3 1/16	"	"	1 3/8	"	"	3"	"	7	3 1/2
2 1/4	"	"	3 1/2	4 1/2	2 1/4	3 7/16	"	"	1 7/16	"	"	"	4"	"	3 3/4
2 1/2	11/16	1/2	3 7/8	4	2 1/2	3 13/16	9/16	11/16	1 1/2	"	1/2	3 1/2	5"	8	4 1/2
2 3/4	"	"	4 1/4	4	2 3/4	4 3/16	9/16	11/16	1 9/16	"	"	"	"	"	"
3"	13/16	"	4 5/8	3 1/2	3	4 9/16	5/8	3/4	1 5/8	"	"	4"	"	9	5"
3 1/4	"	"	5"	3 1/2	3 1/4	4 15/16	"	"	1 11/16	6	"	5"	6"	"	5 1/4
3 1/2	"	"	5 3/8	3 1/4	3 1/2	5 5/16	"	"	1 3/4	"	"	"	"	"	5 3/4

All Dimensions Given For Finished Sizes.
One-sixteenth Inch To Be Added To Finished Dimensions Of Nuts For Rough Sizes.

Catch. A device to prevent a door or window from opening, usually by means of a bolt held in place by some form of spring which engages with a keeper when closed.

Cellar. A box or receptacle under a journal box to hold waste and oil for lubrication. See Driving Box Cellar, Engine Truck Box Cellar.

Cellar Bolt. See Driving Box Cellar Bolt, Engine Truck Box Cellar Bolt.

Center Bearing. Figs. 1957-1959. The place in the center of a truck bolster where the weight of the body rests. A body center plate attached to the car body here rests on a truck center plate attached to the truck bolster. The general term center bearing is used to designate the whole arrangement and the functions which it performs, in distinction from Side Bearing, which see. See also Center Plate.

Center Bearing Plate. 17, Fig. 2149. A movable casting used on electric locomotive trucks to receive the load as applied by the center pin and which is held in place by the centering springs.

Center Pin. 217, Figs. 101-140; 5, Figs. 976-987; Fig. 982. A large bolt or pivot passing through the center casting of an engine truck or the center plates of the body and truck bolsters of a tender. It usually has a washer underneath, where the head bears on the center plate. For engine trucks, a key is commonly put through the lower end to prevent the engine jumping off the truck when on a bad piece of track, or in case of derailment. In locomotives having two-wheel lead-

ing trucks, such as the mogul and consolidation types, the term center pin is applied to the cylindrical casting interposed between the center casting of the truck and the coil spring directly over it. This center pin is held in place by a long, heavy bolt, called a king bolt, which passes through the top of the spring cap at its upper end, and holds the outer end of the truck equalizer at its lower end. The center pin fits loosely in a shallow cylindrical casting, called a center pin guide, bolted to transverse braces. With four-wheel trucks, the casting bolted to the bottom of the cylinder saddle and fitting in the center plate or casting is called a center pin.

Center Pin Guide. 7, Figs. 976-987. A circular wall forming part of a center plate and through which a truck center pin passes. See above.

Center Pin Washer or **Cap** (Engine Truck). 6, Figs. 976-987. A washer through which the center pin or king bolt passes and on which the head of the king bolt rests.

Center Plate. Fig. 986; 14, Figs. 997-1000; 38, Figs. 579-605; 1, Figs. 1027-1031. One of a pair of plates made of cast or malleable iron or pressed or cast steel, and having circular grooves which fit one into the other and which support the tender frame or front frame of the locomotive on the trucks, allowing them to turn freely. The center pin or king bolt passes through both, but does not really serve as a pivot. The body center plate or male center plate is attached to the under side of the body bolster or in cast steel bolsters is made an integral part of the casting. The female or truck center plate is attached to the top side of the truck bolster. When the tender is tilted, as on a curve, part of the weight is carried on the Side Bearings.

Center Plate Centering Stud. 16, Fig. 2149. A bar connecting the centering spring for the truck on some electric locomotives with the center plate and serving to communicate the spring pressure to it and thus bring the center plate back to the central position after it has been displaced for any reason.

Center Plate Washer. 15, Fig. 2149. A flat plate used on some electric locomotives beneath the center plate in order to offer a resistance to the displacement of the truck and thus prevent the tendency to nose or run from one side of the track to the other.

Center Sills. 3, Figs. 1762-1766. The two main longitudinal members of the underframe of a tender. In steel underframe tenders the center sills are usually heavy I-beams, channels, or built-up girders.

Centering Device. See Boiler Centering Device and Trailing Truck Centering Device.

Centering Spring. See Adjusting Spring.

Centering Spring Cylinder. 21, Figs. 1014-1020. See Adjusting Spring Case.

Centering Spring Seat. 22, Figs. 1014-1020. See Adjusting Spring Seat.

Centipede Locomotive (2-12-0). Fig. 2. A locomotive having a two-wheel front truck, six pairs of coupled driving wheels, but no trailing wheels. Not in general use.

Central Filling Piece (Steel Tired Wheels). The part surrounding the hub and connecting it with the tire. Also termed the skeleton. A wheel center is a hub and central fillnig piece combined in one.

Centrifugal Dirt Collector. Figs. 1468, 1537. A device connected in the branch pipe between the brake pipe and distributing valve or triple valve, and so constructed that, due to the combined action of centrifugal force and gravity, all dirt and foreign material is automatically eliminated from the air flowing through the collector without reducing the area of the opening in any way. All dirt and foreign matter eliminated falls into the bottom chamber and by means of a plug may be removed without breaking any pipe connections whatever. When this device is used the brake pipe air strainer may be omitted.

Chafing Iron or **Chafing Plate.** 123, Figs. 101-140; Fig. 549; 19, Figs. 1762-1766. A metal plate to resist wear, used on brake beams, truck transoms, swinging spring planks, on the back bumper of locomotives and the front end sill of the tender. See Bolster Chafing Plate.

Chafing Iron Pocket. A casting forming a flange or recess, in which a chafing plate moves.

Chain. "A series of links or rings connected, or fitted into one another, usually made of some kind of metal." —Webster. See Check Chain, Safety Chain, Cab Gangway Chain, Uncoupling Lever Chain.

Chain Riveting. Fig. 204. A name applied to one method of setting rivets in boiler seams. Two parallel rows of rivets are put in with each rivet of one row exactly opposite a rivet in the other row.

Channel. A rolled steel shape of [section, sometimes used for tender sills and truck bolsters.

Check Chain. Fig. 1784. A chain attached to a truck and the tender frame to prevent the truck from swinging crosswise on the track in case of derailment. Such chains are usually attached either to two or to each of the four corners of a truck and to the sills of the tender.

Check Chain Eye. 30, Figs. 997-1000. See Body Check Chain Eye, Truck Check Chain Eye.

Check Chain Hook. 31, Figs. 1762-1766. See Body Check Chain Hook, Truck Check Chain Hook.

Check Valve. A self-closing valve so arranged that it will permit the free flow of air, gas or a liquid in one direction while preventing a similar flow in the opposite. See Boiler Check Valve, Line Check and Double Check Valve.

(Air Brake.) Figs. 1447-1449. A valve which allows air to flow in one direction only. It is used in the main reservoir pipe of locomotive brake equipments when electric compressor governors are used and arranged for operation in multiple with other governors in the train. The check valve allows air to flow from the main reservoir to the reservoir pipe, but prevents its flow in the opposite direction; so that if a compressor on another locomotive in the train starts to operate alone, and the reservoir pipe pressure is thereby increased, the check valve prevents a corresponding rise in the main reservoir pressure and the resulting difference in the pressure between main reservoir and reservoir pipe, and causes the electric compressor governor to cut in the compressor on that locomotive also.

(Triple Valve.) 15, Fig. 1441. The valve under the emergency valve which prevents the escape of brake cylinder pressure back into the brake pipe when a hose bursts or the train parts. In an emergency application, the emergency valve opens and allows the brake pipe pressure to enter the brake cylinder through the check valve, which is raised off its seat.

Check Valve Case (Triple Valve). 13, Fig. 1441. See above.

Check Valve Case Gasket (Triple Valve). 14, Fig. 1441. See above.

Check Valve Hole. 53, Figs. 152-186. The hole cut in the boiler shell and opening into the check valve.

Check Valve Hole Liner. 54, Figs. 152-186. A plate riveted to the boiler shell around the check valve hole to strengthen it and furnish a secure attachment for the check valve. Also called check valve hole pad.

Check Valve Spring (Triple Valve). 12, Fig. 1441.

Check Plate. See Drawbar Follower Stop.

Chill. A kind of crystallization produced when melted cast iron is cooled suddenly. It is usually accomplished by bringing the molten iron in contact with a cold metal (usually iron) mold. The hardened part of a car wheel is called the chill.

Chill Crack. An irregular crack developed in casting upon the chilled surface of the tread of car wheels.

Chilled Cast Iron Wheel. Figs. 2050-2053. A wheel cast in a chill mold and which has the tread hardened to resist wear. See Chill.

Chime Whistle. Figs. 1667-1672. See Whistle.

Chimney (British). See Smoke Stack.

Chipping (of Chilled Wheels). A scaling off of small portions of the chilled metal, due to imperfect or irregular crystallization.

Chisel. Fig. 2293. A steel cutting tool flattened at one end and ground to an edge. Hot chisels are used for cutting hot metal. Cold chisels are used for cutting cold metal.

Choke Fitting (Air Brake). A special pipe fitting with a restricted air passage for connection to cut-out cocks in the brake cylinder pipe of the Westinghouse ET locomotive brake equipment to prevent loss of braking power on the entire locomotive in the event of a hose connection to the truck or tender brake bursting.

Cinder Chute. See Cinder Pipe.

Cinder Cleaning Hole. 7, Figs. 101-140. A circular opening in one side of a smokebox. It is for the insertion of a rod or poker by means of which the cinders are pushed down in the cinder pipe at the bottom of the smokebox. The hole is closed by a cast iron lid, secured in place by a cam and handle. Also called smokebox cleaning hole.

Cinder Hole. A circular opening in the bottom of a smokebox to which the cinder pipe or hopper is attached. Also called spark hole.

Cinder Pipe. 8, Figs. 101-140. A cast iron tube bolted to the under side of the smokebox and passing down between the frames to discharge cinders or sparks into a pit or other receptacle. Also called spark hopper pipe or cinder chute.

Cinder Pipe Bracket. A support for the cinder pipe.

Cinder Pocket. A Hopper, which see, beneath a smokebox. Also called spark pocket.

Cinder Pocket Ring. A heavy iron ring, riveted around the cinder pipe opening at the bottom of a smokebox to furnish a means of attachment for the cinder pipe.

Cinder Pocket Slide. Also called spark pocket slide, cinder valve or Hopper Slide.

Cinder Valve. 8, Figs. 101-140. Another name for the sliding piece used to open and close a cinder pipe under a smokebox. See Hopper Slide.

Cinder Valve Cap. A cover fitted on the lower end of a cinder pipe.

Cinder Valve Chain. A chain attached at one end to the smokebox and at the other to the cap or cover on the lower end of a cinder pipe, to prevent the cap from being lost.

Cinder Valve Hole. 62, Figs. 152-186. A hole cut in the smokebox shell to which the cinder valve is attached. Usually placed on the bottom center line ahead of the exhaust steam pipes.

Circuit Breaker. 47, Fig. 2127; Fig. 2227. A device for automatically opening a circuit from a trolley or third rail shoe to the controller when the current exceeds a predetermined amount.

Circulation, Boiler. Figs. 326-328.

Circumferential Riveting. The row or rows of rivets that fasten one section of the shell of a boiler to the adjoining piece on the circumference of the plate; hence the name.

Clamp. A device for holding or binding together two or more parts. See Pipe Clamp.

Classification Lamp. Figs. 1708-1718. A lamp used to designate the various classes of trains, and usually attached to the side of the smokebox of the locomotive. See Rule 30, Locomotive, Inspection and Testing.

Classification of Locomotives. Figs. 1 and 2. See Whyte's Nomenclature.

Cleaning Hole. 140, Figs. 101-140; 18, Figs. 152-186. An opening in the side of an extended smokebox for cleaning out sparks and cinders.

Cleaning Hole Cover. 7, Figs. 101-140; 25b, Figs. 361-407; Fig. 382. A cover or lid secured by a handle and a cam on the inside for closing a cleaning hole in the side of the smokebox. Also called cleaning hole cap or plate.

Cleaning Hole Flange. 25a, Figs. 361-407. A casting riveted to the smokebox shell around the cleaning hole, to which the cover is attached.

Clearance. See Piston Clearance.

Clevis. Figs. 1096, 1890. An iron bent in the form of a stirrup or horseshoe, or the letter U, with two ends perforated to receive a pin. (Century Dictionary). Used to connect a brake chain to its levers.

Coach Screw (British). American equivalent, lag screw, but coach screw is also used. A square-headed screw with a pointed end used to screw into wood.

Coal Bunker. 267, Figs. 101-140. The space on the front end of tender in which coal is stored for use of the locomotive.

Coal Pick. Figs. 2307, 2334. A curved tool or implement pointed at one end and the other in the form of a hammer, and fitted with a handle. Carried on the tender and used to break up lumps of coal to a size suitable for firing. Made of steel or malleable iron.

Coal Pusher. Figs. 1837-1841. A device placed in the rear bottom of the coal pit of a locomotive tender for the purpose of mixing the fuel and moving it forward within convenient reach of the fireman, thus enabling him to fire the modern locomotive scientifically and with less labor and fuel.

The Tilting Hopper Coal Pusher consists of a supplementary hopper, hinged to the bottom of the coal pit and so designed as to form a part thereof. A T-piston rod, hinged to and under the free end of the hopper, operates in a steam cylinder located behind the hopper and in the water space of the tender. A steam pipe, with flexible hose connection between engine and

tender, connects this cylinder to the steam fountain of the engine, and when steam pressure is admitted to the cylinder, the piston rod raises the hopper, thus pushing the coal forward within convenient reach of the fireman when in normal firing position.

The Horizontal Coal Pusher is a steam driven mechanism placed in the lower rear end of a locomotive tender. The lower portion of the coal pit in the tender is made relatively narrow to accommodate a rectangular trough in which a plunger operates; suitable packing being provided between plunger and trough to prevent fine coal from working behind the former. A reciprocating motion is communicated to this plunger by a piston rod, connected behind the face of the former, which operates in a cylinder. A suitable steam chest and valve mechanism is bolted to the under-side of the cylinder, thus making it self-draining. Steam may be admitted to either end of the cylinder at the will of the operator. The normal position of the plunger is full ahead, and when steam is admitted to the forward end of the cylinder, the piston moves back and pulls the plunger with it. As the plunger recedes, the coal slides off the sloping sides of the coal pit down into the trough in front of the plunger, and when steam is admitted to the back end of the cylinder, the piston moves forward, forcing the plunger ahead and pushing the coal toward the coal gate. This operation may be repeated at will until the entire supply of coal in the tender has been used.

Coal Sprinkler. Figs. 1205, 1206, 1208, 1209. See Sprinkler.

Cock. "A faucet or rotary valve, usually taking its name from its peculiar use or construction."—Knight. See Bibb Cock, Drain Cock, Cylinder Cock, Stop Cock, Angle Cock, Blow-off Cock, Cut-out Cock, Three-way Cock.

Cock Shaft. See Cylinder Cock Shaft.

Cold Shot. Small globules of iron resembling ordinary gun shot, which are found in the chilled portion of cast iron wheels.

Collar. "A ring or round flange upon or against an object."—Knight.

(Of Journal.) A rim or enlargement on the end of a tender axle which takes the end thrust of the journal bearing.

Color Coat (Painting). The coat (or coats) which follows the rough stuff or scraping filling coat in painting tender tanks and cabs. It is applied before the lettering and striping. The colors are mixed with turpentine and dryers, as little oil as possible being used, only sufficient to prevent the color from rubbing off.

Columbia Type Locomotive (2-4-2). Figs. 1, 23, 106. A locomotive having a two-wheel front truck, two pairs of coupled driving wheels and a two-wheel trailing truck. This type is going out of use in trunk line service and the wheel arrangement is now used principally on light engines for logging or switching purposes.

Column (Trucks). 5, Figs. 1913-1920. The casting which separates the top and bottom arch bars of a diamond truck side frame at the center and serves as a guide for the vertical movement of the bolster.

Column Bolt. 6, Figs. 1913-1920. A bolt passing through the arch bars and holding the column in place and the truck frame together.

Combination Lever (Walschaert and Joy Valve Gear). 261, Figs. 101-140; Fig. 728. Also called combining lever, or lap and lead lever. A steel arm attached to the valve stem and radius rod at its upper end, and having its lower end moved by the union link attached to the crosshead arm. Its function is to give lap and lead to the valve. See Valve Gear.

Combination Stand. See Cab Turret.

Combination Wrench. See Wrench.

Combined Automatic and Straight Air Locomotive Brake (Air Brake). Figs. 1404-1405. This equipment is composed of a standard automatic locomotive brake equipment with the addition of a straight-air brake valve and a few simple parts which permit the use of straight-air on the engine and tender brakes without interfering with the automatic action when the automatic brake valve is used, both brake valves being at all times cut in. Thus an independent locomotive brake is obtained while preserving every function of the automatic system on both train and locomotive. It may be used in any class of service, freight, passenger or switching. See Straight-Air Brake.

Combustion, Systems of. Figs. 255-257.

Combustion Chamber. 306, Figs. 101-140; 33, Figs. 152-186; Fig. 279. A compartment or space in a locomotive boiler between the firebox and smokebox. Its purpose is to promote combustion and secure additional heat from the gases before they enter the tubes. The space between the firebox and the back tube sheet is called a built-in combustion chamber. The back tube sheet is in this case set from 8 to 72 inches ahead of the throat of the firebox, because with wide, shallow fireboxes the tubes give trouble by leaking unless kept away from the direct heat of the burning coal, where they are subjected to sudden and decided changes of temperature. The combustion chamber is used extensively on Mallet locomotives with long boilers.

Combustion Chamber Brace. 73, Figs. 152-186. A brace in the form of a rod or bar tying the shell of a built-in combustion chamber to the boiler shell.

Combustion Chamber Course. 69, Figs. 152-186. That section of a boiler shell in which the combustion chamber is located. In some designs the dome course and combustion chamber course are identical.

Commutator. 1, Fig. 2164. See Armature.

Commutator Shield. Fig. 2159. A steel or iron plate that is fastened beneath the commutators of an electric locomotive between the frame cross-ties or transoms in order to protect the commutators from dust and dirt that would otherwise come in contact with them. This is used on locomotives having the motor armature on the driving axles.

Compound Air Compressor (Air Brake). Fig. 1412. An air compressor having compound air or steam cylinders, or both, for supplying compressed air to the brake system with greater economy of steam consumption and greater efficiency in air delivery than can be obtained with a simple compressor. See Air Compressor and Duplex Air Compressor.

Compound Locomotive. Details, Figs. 609-613. A steam locomotive having one or more cylinders so arranged that the exhaust steam passes from one cylinder into another cylinder or cylinders, where it performs additional work before being discharged from the exhaust nozzle and stack. Two general groups may be set off in classifying compound locomotives; two-cylinder compounds and four-cylinder compounds. The Midland Railway, England, built some three-cylinder locomotives in which one high pressure cylinder exhausts into

two low pressure cylinders, but this method is exceptional. Two-cylinder compounds are built with the h.p. cylinder on one side and the l.p. on the other, connection between them being made through a receiver in the smokebox. An intercepting valve is provided in order to work the engine simple when necessary.

Four-cylinder compound locomotives are built with several different arrangements, as indicated below.

(A) High pressure and low pressure cylinder on each side placed one above the other. Both piston rods drive one crosshead. (Vauclain.) Fig. 144.

(B) H.p. and l.p. cylinders placed one in front of the other on each side, both pistons being on one rod. (Player Tandem.) Fig. 45.

(C) Two h.p. cylinders between frames and two outside l.p. cylinders drive one axle. (Baldwin balanced type.) Figs. 54, 67.

(D) Two h.p. cylinders between frames drive the forward crank axle, and two outside l.p. cylinders drive the second axle. (Baldwin balanced type and Cole balanced type.) In the Cole compound the h.p. cylinders are set slightly ahead of the l.p. cylinders and of the smokebox.

(E) Two h.p. cylinders outside drive the second axle, two l.p. cylinders inside drive the forward crank axle, the h.p. cylinders being set back of the smokebox, and each cylinder having its own valve, with independent cut-off arrangement for high and for low pressure cylinders.

(F) Two outside l.p. cylinders driving axles on a swiveling truck, and two outside h.p. cylinders driving axles on a similar fixed frame. (Mallet articulated type.) Figs. 75-92, 133-142.

See Mallet Articulated (Triplex) Compound Locomotive.

Theoretically the advantage of a compound locomotive over a simple engine lies in its ability to utilize a greater degree of expansion of the steam, a greater range of temperature between the live and the exhaust steam, and therefore for the same work performed, its steam consumption is smaller. With two-cylinder compounds the limit of power available is attained when the diameter of the low pressure cylinder is so great as to reach the clearance limits allowed on any particular road, but they possess the defect of all two-cylinder engines, lack of balance, which is destructive to track and roadbed. With four-cylinder compounds employing a crank axle, however, the inside h.p. and outside l.p. cranks on one side are set 180 deg. apart, or at opposite dead centers, while the corresponding pair on the other side of the engine are similarly set with reference to each other, but one-quarter revolution ahead of the first pair. This produces a more nearly balanced engine than the usual type of simple locomotive.

Compressed Air Locomotive. A locomotive using compressed air instead of steam in the cylinders. The air is stored under pressure in tanks and admitted to the cylinders at a reduced pressure. In some designs, known as two-stage locomotives, the air is allowed to do further work in low pressure cylinders after passing through an intercooler.

Compression. The increase of pressure of steam confined in one end of a cylinder by the action of the valve in closing the exhaust port while the piston is moving towards that end of the cylinder and thereby diminishing the volume for the steam to occupy. To a certain extent, compression is an advantage, because the steam shut up in one end of a cylinder and compressed by the advancing piston acts as an elastic cushion to absorb the shock of the reversal of motion of the reciprocating parts of an engine.

Compressor Cradle (Air Brake). Fig. 1475. A steel frame for supporting a motor-driven air compressor. The cradle is secured by means of brackets having pockets in which are rubber cushions so arranged as to prevent any vibrations of the compressor from being communicated to the body, and to allow its removal quickly and easily.

Compressor Governor. See Pump Governor.

Conductance (Electricity). A term often used as a synonym of Conductivity.

Conductivity (Electricity). The relative facility with which a conductor transmits electric energy. The term Resistance, which see, is applied to the inverse or reciprocal of this property.

Conductor (Electric Locomotive). A wire, rod, strip or rail, of metal or carbon; or an acid or a solution of a metallic salt, possessing the property of transmitting or conveying an electric current. See Third-Rail.

Conductor Terminal (Electric Locomotive). Fig. 2160. The end of a conductor; the point where it enters the coupler socket.

Conductor's Valve. A valve for applying the train brakes, occasionally placed at some convenient points on the tender.

Conical Boiler. Figs. 150, 173-187. A boiler having a shell made up of one or more cylindrical courses of uniform diameter next to the firebox, a conical connection or course tapering down to smaller diameter, the taper extending entirely around the boiler, and one or more adjoining cylindrical courses of reduced and uniform diameter next to the smokebox.

Conical Connection or Course (Boilers). 39, Figs. 152-186. That plate or course of a boiler having a tapering shape, or of larger diameter at one end than at the other. In a wagon top boiler it comes next to the firebox and in an extended wagon top boiler one or more straight courses are put in between it and the firebox. In these types of boilers the taper is placed on the top and sides of the boiler, as distinguished from conical type boilers, where the taper extends entirely around the boiler. Some straight top boilers have a conical course with the taper on the bottom, next to the firebox, to provide more water space between the tubes and shell.

Connecting Rod. See Main Rod.

Consolidation Locomotive (2-8-0). Figs. 1, 33-36, 109-110. A locomotive having a two-wheel front truck and four pairs of coupled driving wheels, but no trailing truck. Used for slow heavy freight service.

Contact Shoe. See Third Rail Shoe and Overhead Contact Shoe.

Contactor. See Control System.

Continuous Brake. A system of brakes so arranged that by connecting together the brake apparatus on the different cars forming a train it can be operated on all of them from one or more points on the train, as from the engine or from any of the cars. See Air Brake, Vacuum Brake.

Continuous Truck Frame. An iron bar which is welded together in a rectangular shape so as to form the sides and ends of a truck frame. Also made in a solid casting.

Control Resistor. Fig. 2204. See CONTROL SYSTEM.

Control Switch. Fig. 2209. See CONTROL SYSTEM.

Control System (Type M, General Electric Co.). A system of control where one or more controllers are operated from a distance. This system has been developed with special reference to the operation of a train consisting of several motor cars or electric locomotives coupled together, all motors being controlled simultaneously by a single operator. Each motor or locomotive is equipped with a motor controller, one or two master controllers, and control couplers, together with such other apparatus as switches, fuses, rheostats, etc., as constitutes a complete operative motor or locomotive equipment.

The motor controller consists of a number of electrically operated switches, called contactors, which close the various power and motor circuits, and which carry only the current for the operating coils of the contactors. These latter are designed to open the motor circuit contacts by gravity, and are provided with an efficient magnetic blow-out for quickly and positively disrupting the arc thus formed.

The motor controller also includes an electrically-operated reversing switch, called reverser, the function of which is to connect the motor armatures and fields in the proper relations for giving forward or backward movement of the locomotive. The reverser consists of a drum having two positions and carrying the necessary contacts for engaging fixed contact fingers, together with two operating coils, one for throwing the reverser to each position. The operation of this reverser is also effected by the master controller.

The master controller is similar in construction to the ordinary hand controller, but very small and easily operated. It is provided with separate operating and reversing interlocked handles, and has a magnetic blow-out for disrupting the arcs formed on opening the control circuit connections.

The combination of motors, rheostats, etc., effected by the motor controllers, is the same as that accomplished by ordinary hand controllers, giving series and parallel operation of motors and two economical running speeds. (See CONTROLLER.) Where several motor cars or locomotives are coupled together the control circuits of the various vehicles are joined together by means of couplers located at the end of each vehicle, so that all motor controller operating circuits, and all master controllers are connected together, making all of the motor controllers operative from any master controller.

The couplings for connecting the control circuits between cars consist of a coupler socket fixed to the end of the car, or locomotive, and a jumper consisting of two coupler plugs connected by a multiple cable. The coupler sockets and plugs contain corresponding metal contacts for the connection of the electrical circuits.

A cut-out switch is provided on each car or locomotive, by means of which damaged motors or motor controllers may be disconnected from the energizing circuits.

Control System. Figs. 2203-2222. Westinghouse "HL" Unit Switch Control System for Electric Locomotives. The unit switch consists of apparatus the elements of which are built on the unit plan, so that any element or unit may be removed and replaced. The four units of the complete switch are, the switch proper, the cylinder, the magnet valve, and the blow-out coil. A group of several switches constitute a switch group. Each unit switch is secured to the base plate of the switch group by two copper bolts, which serve as terminals and carry the motor current, and by removing these two bolts an entire unit switch, complete with insulating box and arc chute, can be taken out. The pneumatic equipment, which operates the switch, consists of a cylinder and a magnet valve, a unit which is secured to the switch group casting with two bolts. The blow-out coils are also secured to the switch group base plate by two bolts. See diagrams, Figs. 2205-2206. (*Master Controller,* Figs. 2207-2208.) The master controller is similar, but simpler than the ordinary drum type controllers. The position of the notches are indicated on the controller cover and a star wheel mechanism inside of the case insures proper movement of the drums. The master controller contains the usual power and reverse handles, mutually interlocked. (*Control Switch,* Fig. 2209). Connection between the trolley and the control circuits is established by the control switch. It also is a reset switch for resetting the line switch after the overload trip has opened it. If the line switch should be tripped because of overload or short circuit, the operating circuit of the control switch must be opened and the reset circuit closed, momentarily, before power can again be applied to the motors. A control circuit fuse is mounted in the control switch case. (*Cylinder and Magnet Valve of Unit Switch,* Fig. 2221.) The magnet valve controls the admission and release of compressed air from the brake system to the piston cylinder, the piston of which forces up the lower switch contacts to the upper contact by means of the piston hook connection. The cylinder action is powerful and positive, giving a high contact pressure. (*Switch Group.* Figs. 2217-2218.) A number of unit switches assembled in a common frame, which forms a suitable support for them, constitutes a switch group. The grouping of the switches simplifies connections and renders each one accessible for inspection. A compressed "air-reservoir" extends the full length of the group and from it each magnet valve receives its supply for operating its switch. A dust-proof, sheet-iron cover, held in place with toggle latches, protects the switches from the weather. On one end of the switch group, in a dust-proof compartment, are located the motor cut-out switches and the control circuit terminal board. (*Switch.* Figs. 2211-2212.) Each unit switch is a powerful pneumatically operated circuit-breaker, equipped with a blow-out coil, and consists of two copper castings. One is stationary and forms directly the upper or fixed contact, while the other, which moves, supports the lower contact. The current carrying parts are enclosed in a fireproof insulated box of moulded material. In addition the switch jaws are further surrounded by an arc chute inside the switch box, which spread the arc when the switch opens, and assists the blow-out coils in extinguishing the arc. A copper shunt of ample carrying capacity relieves all joints from conducting current. (*Reverser,* Fig. 2210). The reverser is used to change the motor connections so as to reverse the rotation of the motors and in turn the direction of the locomotive. It consists of copper fingers mounted on a stationary base, and pressing on one or the other of two sets of movable contacts carried on a drum. The drum is revolved to the forward or the reverse position by one or the other of two pneumatic cylinders, each controlled by a magnet valve similar to those in the switch group. Necessary interlocking connections are established by

small fingers mounted upon the reverser frame and pressing on corresponding movable contact pieces on the reverser shaft. (*Line Switch.* Figs. 2215-2216.) The main motor circuits are always opened by the line switch, and it takes the brunt of the duty imposed on the control. The line switch proper consists of two standard, pneumatically operated switches, which are operated by the normal movements of the controller. Associated with the line switch is an overload trip which automatically opens the switch in case of overloads or short circuits, so in addition to performing normal switching functions, the line switch provides overload protection. The line switch is mounted separately from the control switches in the switch group, so that in case of accident to one set of switches, the other will be available to break the circuit. Line switches are not necessary for small low-power locomotives, for the switches of the circuit group can handle the motor current effectively. (*Control Resistor.* Fig. 2204). The control resistor is used to reduce the trolley voltage for operating the magnet valves. The resistance element is of the slotted ribbon type. (*Train Line Junction Box.* Fig. 2222.) To facilitate the installation and care of the equipment, all connections to the control train line are made at three junction boxes, one of which is located near the center of the car and one near each end. The terminal board is mounted in an iron box, having threaded holes in its sides for fastening conduit pipe. (*Train Line Receptacle and Jumper.* Fig. 2219.) For train operation train line receptacles and jumpers are used for carrying the control circuits between adjacent cars and locomotives, thus connecting corresponding control wires, so that when these wires are energized by any master controller like results are obtained simultaneously throughout all motor cars or locomotives of a train. (*Grid Resistors.* Fig. 2220). Grid resistors are used to reduce the flow of current at starting, thus giving the proper current for accelerating the locomotive.

Controller. Figs. 2207, 2208, 2224. An electric switching mechanism for controlling the speed and direction of rotation of electric motors. It includes the necessary movable and fixed contacts for connecting the motors to the power circuit and to a variable resistance in the combinations necessary for starting, accelerating and reversing the car or locomotive. Nearly all railway controllers are of the series-parallel type, arranged to connect the motors first in series with each other and then in parallel across the power circuit, giving two economical running speeds. While accelerating to these speeds, variable resistances introduced into the circuit prevent undue rise of current.

The controller consists of a main cylinder, carrying the necessary contacts insulated from the shaft and from each other, for engaging with fixed contacts or fingers, thus effecting the required electrical connections for reversing the direction of rotation of the motors. The arcs formed on opening the circuits are disrupted by a magnetic blowout. The controller is enclosed in an iron casing, which protects all parts and serves to attach it to the car or locomotive.

Controller Handle (Electric Locomotive). See Controller Lever.

Controller Lever (Electric Locomotive). A brass arm secured to the shaft of a motorman's controller to operate it. The lever has a latch actuated by a spring, to lock it in any desired notch on the quadrant, thus giving different combinations of series or series-parallel arrangements of the motors.

Controller Notch (Electric Locomotive). See Controller Lever.

Cooler Cock. A faucet screwed into the side of a tender tank over a truck, for connecting a small hose so as to convey water to the journal bearings in case any of them should run hot. Also called flood cock.

Cooler Cock Nipple. A nipple tapped into the side of the tank for attaching a cooler cock.

Cooler Cock Nut. A coupling nut for attaching the cooler cock hose to a truck box.

Cooling Coil (Air Brake). A coil or length of pipe placed in the air discharge pipe of the compressor, having sufficient radiating surface to cool the compressed air from the temperature of discharge to that of the atmosphere, thus causing the moisture necessarily entrapped in compression to condense and collect in the main reservoir.

Cord. See Bell Cord.

Corner Grate. 13, Figs. 443-465; Figs. 451-452. A grate bar shaped to fit the corners of the firebox. Usually it is stationary and not connected with the shaking grates.

Corner Handle. More commonly a Hand Hold or a Grab Iron.

Corrugated Firebox. See Vanderbilt Boiler, Lentz Boiler.

Cotter (British). See Key.

Cotter Pin. See Castle Nuts, Cotter Pins, etc.

Counterbalance. 8, Figs. 897-907. The weight or mass of metal placed in one part of a driving wheel center to balance the revolving weights of the crank pin, main or side rod, and the reciprocating weights of the crosshead, piston and piston rod.

Counter Boring. An enlargement or other alteration of form, for a certain portion of its length, of a hole bored in any substance.

Coupler. 190, Figs. 101-140; Figs. 1071-1096; Figs. 1866, 1886, 1887, 1890-1903. An appliance for connecting or coupling tenders to cars and coupling cars together or locomotives to cars. Government regulations require that these must couple automatically by impact and must be uncoupled without going between the cars on all equipment engaged in interstate commerce. See Drawbar and Safety Appliance Standards.

In 1913 the Master Mechanics' Association adopted as standard the M. C. B. standard coupler contour lines. See A. R. M. M. A. Standards. Figs. 2266-2267.

Sometimes applied to the devices for connecting steam and air hose between the tender and cars.

Coupler Brace. A brace placed on each side of the pilot coupler and bolted to the bumper to assist in resisting shocks in coupling.

Coupler Carry Iron. See Drawbar Carry Iron.

Coupler Centering Devices. See Drawbar Centering Devices.

Coupler Horn. The projecting lug cast on the head of the coupler which bears on the face of the end sill or dead block when the draft gear is closed solid in compression.

Coupler Limit Gage (A. R. M. M. A. Standard). Fig. 2272.

Coupler Pocket. Fig. 1093; 193, Figs. 101-140; 11, Figs. 1052-1056. A casting bolted to the pilot beam and

containing a pocket for the coupler shank, to which it is fastened by a pin.

Coupler Release Rod. 192, Figs. 101-140. See UNCOUPLING LEVER.

Coupler Side Spring. A spring bearing on the bumper beam and lugs cast on the side of the coupler head to limit the side movement of the coupler head and to keep it in a central position.

Coupler Socket (Electric Locomotive). Fig. 2160. A receptacle made of metal and hard insulating material, having inside of it plugs connected to a circuit leading to the controller of an electric locomotive. The socket is placed at the end of the locomotive, under the bumper, and when two locomotives are coupled for multiple unit operation, or double heading, the end or terminal of a flexible conductor or jumper connected to one, is inserted in the socket on the other, thus enabling the motorman of either locomotive to control the operation of the other.

Coupler Socket Lid (Electric Locomotive). 10, Fig. 2160. A metal flap hinged at the top, to cover the outer end of a coupler socket. Also called TERMINAL LID.

Coupler Support. A piece of cast or wrought iron fastened to a bumper and surrounding the shank of drawbar of a coupler to support and hold it in place. A DRAWBAR CARRY IRON, which see.

Coupler Yoke. A pocket strap, U-shaped, which contains the spring and follower plates of a drawbar. It is the means of attaching the drawbar to the spring and follower plates, which are carried in the draft gear cheek plates riveted to the tender sills.

Coupling. "That which couples or connects, as a hook, chain or bar."—Webster. See COUPLER and PIPE COUPLING.

Coupling Case. See HOSE COUPLING CASE.

Coupling Hose. See AIR BRAKE HOSE.

Coupling Link. A wrought iron link or open bar by which engines and cars are coupled together by coupling pins. Chain coupling links are used with draw hooks. In consequence of the danger to trainmen attending the use of coupling links, and legislation forbidding their use, automatic couplers have almost entirely replaced them. See COUPLER.

Coupling Nut (Pipe Fittings). A nut used to connect two pieces of pipe by what is called a union joint or UNION, which see.

Coupling Nut Ring. A sleeve or collar forming part of a union joint. See UNION.

Coupling Pin. A round bar of iron with which a coupling link is connected to a drawbar.

Coupling Pin Chain. A small chain attached to the car by a suitable eye and to the coupling pin to prevent it from being lost.

Coupling Rod (British). See SIDE ROD.

Coupling Shackle (British). The end link of the coupling which is secured by a pin to the shank of the DRAW HOOK, which see.

Coupling Screw (British). A right and left-handed screw used in a SCREW COUPLING, which see.

Cover Plate. A face plate of a steel-tired wheel connecting the tire and hub.

In metal underframes for tenders a plate which is riveted to the flanges of the center sills to give them additional vertical strength as a box girder. The plate riveted to the top flanges is called a top cover plate and one riveted to the bottom flanges a bottom cover plate.

Cradle. See COMPRESSOR CRADLE.

Crank. A device for converting rotary to reciprocating motion or vice versa, consisting of a crank arm one end of which is attached to a shaft and the other free to rotate about the axis of the shaft. A crank pin is usually placed at the end of the crank arm with its axis parallel to the axis of the shaft. In a locomotive the driving wheel hub forms the crank arm for the crank pin and axle.

Crank Axle. Figs. 908, 912; 1, Figs. 697-701. A driving axle used on inside connected engines, either forged in one piece or built up to form a crank arm and pin to which the main rods for the inside cylinders are connected.

Crank Disc. 6 and 7, Figs. 908-909. One of two flat steel forgings, circular or of other shape, attached at right angles to a built-up driving axle, and having secured between them a crank pin. Also called crank web.

Crank Pin. 177 and 178, Figs. 101-140; Figs. 886, 887, 892-895; 7, Figs. 908, 909. A short cylindrical shaft secured to a crank on a driving wheel, or joining the two webs or discs of a crank axle. The brass of a main rod or side rod is fitted to it, and its function is to transmit the reciprocating motion imparted to the piston, piston rod, crosshead and main rod by the expansive force of the steam, to the rotating driving wheel. Crank pins are distinguished as main crank pins if on the pair of driving wheels turned directly by the main rod; front crank pins if on the forward coupled or driving wheels, and front intermediate or back intermediate crank pins if on front or back intermediate driving wheels between the main driving wheels and the front or back drivers, as the case may be. See Rule 36 LOCOMOTIVES, INSPECTION AND TESTING.

Crank Pin Bolt or Stud. 5, Figs. 887-892. A stud bolt set in the end of a crank pin and on which a nut can be screwed to hold a washer in place. See CRANK PIN NUT.

Crank Pin Bushing. 2, Figs 871-883. A sleeve or collar made of brass or anti-friction metal, forced into a suitable hole in the stub end of a main or side rod and forming a bearing for the crank pin.

Crank Pin Nut. 6, Figs. 887-892. A nut screwed on the outer end of a crank pin to secure a cap or washer that holds the rod in place on the pin.

Crank Pin Washer or Collar. 4, Figs. 887-892. A circular plate with a hole in the center, held in place by a nut on the outer end of a crank pin to hold a stub end brass in place.

Crank Pin Wheel Seat. 1, Figs. 887-892. That portion of a crank pin that is in the body of a crank or wheel.

Crank Web. See CRANK DISC.

Cross Bar (Swing Link Hanger). The iron bar supporting the cross bar casting which carries the spring plank. Also called mandrel pin and lower swing hanger pivot.

Cross Compound Locomotive. A two-cylinder compound locomotive, having its high-pressure cylinder on one side and its low-pressure cylinder on the other side of the engine.

Crosshead. 35, Figs. 101-140; Figs. 841-849. A solid or built-up block of metal to which one end of the piston rod is secured, sliding in parallel ways or guides

and having a pin or pivot for the attachment of the main or connecting rod. See RULE 25, LOCOMOTIVES, INSPECTION AND TESTING.

(Air Brake.) A forked casting attached to the outer end of the piston rod, in certain classes of driver brake cylinders, to which the brake levers are connected.

Crosshead Arm (Walschaert Valve Gear). 263, Figs. 101-140; 14, Figs. 841-847; Figs. 850, 851. A short bar rigidly attached to the crosshead in a vertical position, and holding one end of the UNION LINK, which see, that serves to transmit its motion to the COMBINATION LEVER.

Crosshead Gib. 36, Figs. 101-140; 9, Figs. 841-847; Fig. 853. A flat liner or rubbing piece, often made of brass, to serve as a bearing surface for the crosshead on the guides.

Crosshead Guide. See GUIDE.

Crosshead Key. 3, Figs. 841-847. A flat wedge-shaped piece of metal passing through a slot in the front end of the crosshead and through a corresponding slot in the back end of the piston rod, to fasten the rod securely into the crosshead.

Crosshead Lining. 4, Figs. 841-847. A lining of soft bearing metal cast on the guide bearing surfaces of a crosshead.

Crosshead Oil Cup. 8 and 10, Figs. 841-847. An oil cup screwed in a crosshead to supply oil to the wrist pin. In some designs it is cast solid with the crosshead.

Crosshead Plate. A flat piece of iron or steel bolted on each side of a two-bar, or alligator crosshead to hold it in place laterally.

Crosshead Shoe. See CROSSHEAD GIB.

Crosshead Wrist Pin. 2, Figs. 841-847; Figs. 852-855. A pin or short shaft secured to the crosshead for the attachment of the front end of the main rod. It transmits the reciprocating motion of the crosshead to the main rod and forms a pivot around which the main rod turns.

Crosshead Wrist Pin Nut. Figs. 856-857. A nut for holding the wrist pin in place in the crosshead.

Crosshead Wrist Pin Washer. A ring fitted over the end of the wrist pin.

Crosstie. 13, Figs. 504-508; Figs. 526, 527, 533, 535, 536, 542, 548, 550, 553; Figs. 556-558, 560, 561, 570, 573. A transverse brace for strengthening a locomotive or truck frame. The main frame crossties are designated according to location, as top or bottom crosstie, back or front of cylinder; back of firebox; at back, main intermediate or front pedestal, and under firebox. Usually made of steel castings. See EXPANSION CROSSTIE, PEDESTAL CROSSTIE.

Crosstie Brace (Engine Truck). A transverse bar bolted at each end to the side frames of an engine truck.

Crosstie Oil Cup. A metal cup for holding oil for the purpose of lubricating a CROSSTIE SHOE.

Crosstie Shoe. A metal piece attached to the foundation ring of a wide firebox, resting upon a special type of frame crosstie, to allow a slight movement of the firebox due to expansion and contraction.

Crow Foot. 82, Figs. 152-186; Fig. 219. A boiler brace foot made in triangular form and riveted to the boiler plate. Usually used to fasten the back head and tube sheet stays to the boiler brace.

Crown Bar. 16, Figs. 152-186. A beam extending across the water space above the crown sheet of wagon top boilers to support the stay bolts holding up the crown sheet where the opening for the steam dome prevents staying the crown sheet to the roof sheet. They are usually supported at the ends by castings resting on the top edges of the side sheets of the firebox and by sling stays from the roof sheet or dome shell. Thimbles on the crown sheet stay bolts maintain the proper spacing between the crown sheet and the crown bars. Not in general use now.

Crown Bar Bolt. 17, Figs. 152-186. A bolt passing through the crown bar and supporting the crown sheet. They are encased in CROWN BAR THIMBLES, which see, to preserve the proper space between the crown sheet and the crown bar.

Crown Bar Foot. That portion of the lower edge of the crown bar that rests upon the side sheets of the firebox.

Crown Bar Link. A short rod or link to connect a crown bar with a brace.

Crown Bar Separator. See CROWN BAR THIMBLE.

Crown Bar Sling. A rod secured to the crown bar and supporting it from above by being bolted at its upper end to a bracket riveted to the roof sheet or dome shell.

Crown Bar Sling Eye Bolt. An eye bolt screwed into a crown bar for attaching it to a crown bar sling.

Crown Bar Sling Pins. The bolts or pins holding the crown bar slings at the top and bottom.

Crown Bar Thimble. A short, hollow bolt or spacer through which a crown bar bolt passes, placed between the crown sheet and the lower side of the crown bar.

Crown Brass. See DRIVING BOX BRASS.

Crown Sheet. 127, Figs. 101-140; 7, Figs. 152-186. A sheet or plate directly over the fire and forming the roof of a firebox. Being exposed to an intense heat on one side and covered with water on the other, there is a violent formation of steam on its surface. Crown sheets are sometimes made flat and sometimes curved. Also they are made in one continuous sheet with the firebox side sheets. In any case, they must be strongly supported, and this is accomplished either by CROWN BARS (which see), radial stays, or in the case of the Belpaire firebox, straight vertical and horizontal stays.

Crown Stay. A stay bolt connecting the crown sheet of a boiler with the roof sheet. It performs the same functions for the crown sheet as the stay bolt does for the side sheets.

Cup Washer. See WASHER.

Curves. In the United States it is customary to express curvature in degrees noted by the deflection from the tangent measured at stations 100 feet apart. In other words, the number of degrees of central angle subtended by a chord of 100 feet represents the "degree curve." One degree of curvature is equal to a radius of 5,730 feet. Therefore, the number of degrees divided into 5,730 gives the radius in feet, or, per contra, the number of feet radius divided into 5,730 gives the number of degrees. This assumes that the 100 feet are measured on the arc, instead of the chord, but the error is so slight on curves commonly used that it may be ignored for ordinary calculation. In English practice it is common to define a curve as so many chains (66 feet) radius. Thus the radius

of a one-degree curve expressed in chains would be 5730/66 equals 86.81; therefore, 86.81 divided by the degrees equals the radius in chains, or 86.81 divided by the radius in chains equals the degrees. In the metric system, instead of the stations being 100 feet apart they are taken at 20 metres (65.61 feet).

Curve Resistance. The accompanying chart represents approximately the resistance due to curves alone, un-

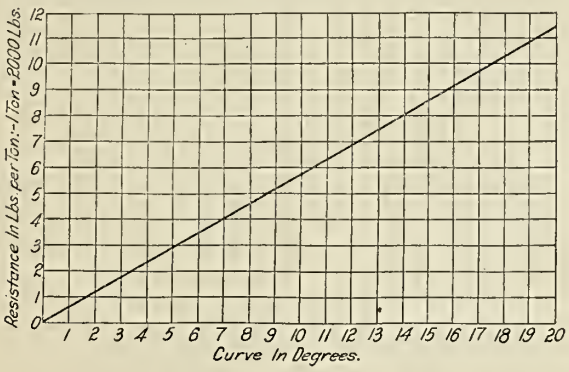

der ordinary circumstances, and is based on the assumption that each degree of curvature is equal to a straight grade of 1½ feet per mile.

The following may be used for electric railway calculations: Curve Resistance in pounds per ton equals approximately 0.8 pounds times degrees of curvature.

Cut-Off. The act of closing communication between either end of a cylinder and the steam entering the steam chest, effected by the valve being moved to such a position that it closes one of the steam ports.

Cut-out Cock (Air Brake). Fig. 1464. A valve inserted in the branch pipe from the brake pipe to the triple valve, which can be closed and the brakes on that locomotive or tender put out of action in case they are not working properly. The closing of this valve does not interfere with the operation of the brakes under any car in the train. See Double Cut-Out Cock.

A valve which may be inserted in the pipe of the air brake equipment so as to cut off one part from the remainder of the apparatus whenever necessary.

Cylinder. 13, Figs. 101-140; Figs. 574-665, 12, Figs. 634-640. A casting forming a chamber whose ends are circular, and with straight parallel sides, as the cylinder of a steam engine. The cylinders used in connection with locomotives are made of cast iron or steel, and have pistons fitted so as to work steam-tight in them. Cylinders used in brake apparatus are shown in Figs. 1445-1446, 1514-1515. See Brake Cylinder.

(Compound Locomotives.) The high-pressure cylinder or cylinders receive steam from the boiler and exhaust it into a receiver or into the steam chest of the low-pressure cylinders. The low-pressure cylinders receive the exhaust steam from the high-pressure cylinders and finally exhaust it to the atmosphere through the stack.

Cylinder Attachments. Figs. 618-647. The Relief Valves, Cylinder Cocks, By-Pass Valves, which see, attached to or used in connection with the cylinders.

Cylinder Bolt. A bolt which is used for fastening the cylinder to the frame.

Cylinder Bushing. A cylindrical lining fitted to the inside of a cylinder for the purpose of reducing its diameter. It can be removed and replaced by a new bushing when it has become excessively worn. See Cylinder Castings.

Cylinder By-pass Valve. Figs. 625, 627, 630, 632. One of two small double disc valves mounted in chambers bolted to a steam chest containing a piston valve. The larger face of the by-pass valve is in communication with the interior or steam cavity of the main piston valve, while the smaller face is on the side toward the cylinder. If for any reason the pressure in the cylinder should increase to a dangerous degree, the by-pass acts as a relief valve, and opens communication between the cylinder and the steam chamber inside the main valve. When running with the throttle closed, the by-pass valves allow communication to be established between both ends of the cylinder, and the interior cavity of the piston valve equalizes the pressure.

Cylinder Casing. The outside metal sheathing or cover of a cylinder.

Cylinder Castings.—The specifications for locomotive cylinder castings, cylinder bushings, cylinder heads, steam chests, valve bushings and packing rings, which are now American Railway Master Mechanics' Association standard (revised in 1915) are as follows:

I. MANUFACTURE

1. *Process.*—Locomotive cylinders, cylinder bushings, cylinder heads, steam chests, valve bushings and packing rings shall be made from good quality close-grained gray iron cast in a dry mold.

II. CHEMICAL PROPERTIES AND TESTS

2. *Chemical Composition.*—Drillings taken from the fractured end of the transverse test bars shall conform to the following limits in chemical composition:

Phosphorus, not over	0.90 per cent
Sulphur, not over	0.12 per cent
Manganese, not over	0.70 per cent
Silicon for cylinders only, not over	1.60 per cent
Silicon for bushings, heads, chests and rings	1.50 to 1.80 per cent

3. *Check Analysis.*—A check analysis of drillings taken from the transverse test bar may be made by the purchaser, and shall conform to the requirements specified in Section 2.

III. PHYSICAL PROPERTIES AND TESTS

4. *Transverse Tests.*—When placed horizontally upon supports 12 in. apart and tested under a centrally applied load, the arbitration test bars, specified in Section 6 (a), shall show an average transverse strength of not less than 3,200 lb. and an average deflection of not less than 0.09 in. The rate of application of the load shall be from 20 to 40 sec. for a deflection of 0.10 in.

5. *Chill Test.*—Before pouring, a sample of the iron shall be taken and chilled in a cast-iron mold, as specified in Section 6 (b). The sample shall be allowed to cool in the mold until it is dark red or almost black, when it may be knocked out and quenched in water. The sample, on being broken, must show a close-grained gray iron, with a well defined border of white iron at the bottom of the fracture. The depth of the white iron must not be less than 1/16 in. as measured at the center line.

6. *Molds for Test Specimens.*—(a) Arbitration Bar.—The mold for the bars is shown in Figure 1. The bottom of the bar is 1/16 in. smaller in diameter than the top, to allow for draft and for the strain of pouring. The pattern shall not be rapped before withdraw-

ing. The flask is to be rammed up with green molding sand, a little damper than usual, well mixed and put through a No. 8 sieve, with a mixture of 1 to 12 bituminous facing. The mold shall be rammed evenly and fairly hard, thoroughly dried and not cast until it is cold. The test bar should not be removed from

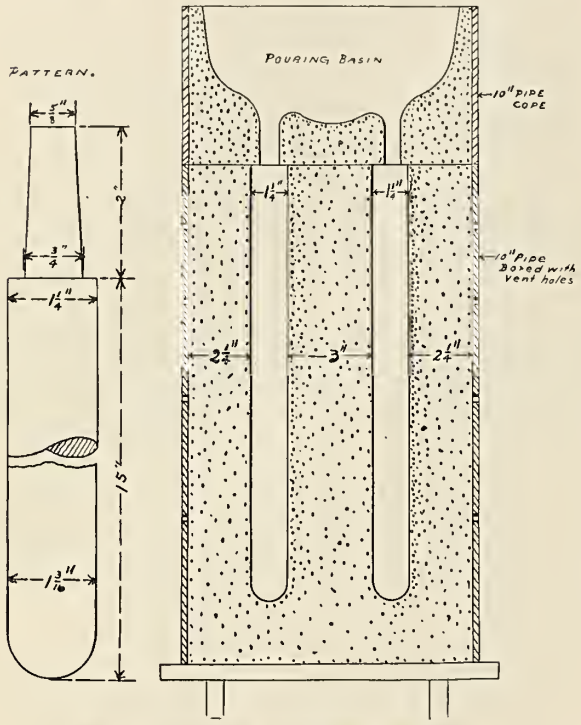

Fig. 1.—Mold for Arbitration Test Bar

the mold until cold enough to be handled. It shall not be rumbled or otherwise treated, being simply bushed off before testing.

(b) Chill Test.—The form and dimensions of the mold shall be in accordance with Figure 2.

7. *Number of Tests.*—(a) Two arbitration test bars, cast as specified in Section 6 (a), shall be poured from each ladle of metal used for one or more cylinders.

(b) One chill test, cast as specified in Section 6 (b), shall be poured from each ladle of metal used for one or more cylinders. The chill specimens may

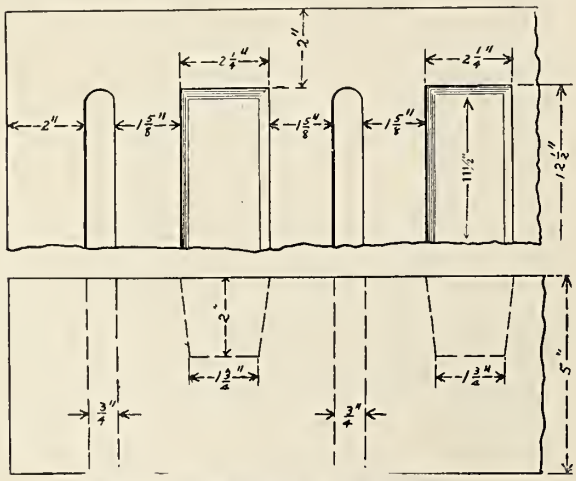

Fig. 2.—Mold for Chill Test Specimen.

be cast in adjacent molds, but in such cases a space must be provided between the molds. (See Fig. 2.)

IV. WORKMANSHIP AND FINISH

8. *Character of Castings.*—Cylinders shall be smooth, well cleaned, free from shrinkage cracks and from other defects sufficiently extensive to impair the value of the castings, and must finish to blue-print size.

V. MARKING

9. *Marking.*—Each cylinder shall have cast on it, in raised letters, marks designating the maker, the date of casting, the serial and pattern numbers and other marks specified by the purchaser.

VI. INSPECTION AND REJECTION

10. *Inspection.*—(a) The purchaser, or his inspector, shall be given a reasonable opportunity to enable him to witness the pouring of the cylinders and test specimens, as well as to be present when physical tests are made.

(b) In case the inspector is not present to witness the pouring of the castings and test specimens, the manufacturer will make all tests required by the specification, and, upon demand, will furnish the purchaser with a copy of the results of his tests, and will hold the transverse and chill specimens subject to examination by the inspector. The tests made by the manufacturer shall be considered final.

(c) All physical tests and inspection shall be made at the place of manufacture.

11. *Rejection.*—Unless otherwise specified, any rejection based on tests made in accordance with Section 3 shall be reported within five days from the receipt of samples.

Cylinder Cock. Figs. 634-640, 641, 646, 647. A small cock screwed into the bottom of a cylinder at each end and operated by a rod from the cab or by compressed air to allow any accumulation of water in the cylinder to escape. See LOCOMOTIVES, INSPECTION AND TESTING.

Cylinder Cock Lever. 20, Figs. 634-640; 270 and 171, Figs. 101-140; 15, Figs. 634-640. A lever pivoted to a fulcrum casting in the cab, and connected to the rod that operates the cylinder cocks.

Cylinder Cock Lever Quadrant. A curved piece of metal with notches for holding the latch of a cylinder cock lever.

Cylinder Cock Reach Rod. 17, Figs. 634-640. A rod connecting the cylinder cock lever with another lever directly connected to the cylinder cock side rods.

Cylinder Cock Rod Guide. A slotted piece for holding a cylinder cock rod in place.

Cylinder Cock Shaft. 237, Figs. 101-140. A shaft placed transversely to the frames in bearings or hangers bolted to the frame, with an arm at each end to which the cylinder cock slides are connected.

Cylinder Cock Shaft Arm. 15, Fig. 640. An arm or lever connected to the rod running to the cab and connected to the cylinder cock slide rods through the cylinder cock shaft.

Cylinder Cock Shaft Bearing. 21, Figs. 634-640. A bracket attached to the frame to hold the cylinder cock shaft.

Cylinder Cock Shank or Stem. 9, Figs. 634-640. That part of the cylinder cock that is screwed to the cylinder.

Cylinder Cock Slide Rod. 19, Figs 634-640. A rod con-

necting the stems of the cylinder cocks with the cylinder cock arm.

Cylinder Cock Slide Rod Connection. The link or bar connecting a cylinder cock slide rod with its corresponding shaft arm.

Cylindrical Gages. Gages made for measuring the sizes of cylinders and cylindrical holes, often called Whitworth gages. They consist of steel cylinders and rings hardened and ground very accurately to standard sizes. These fit into each other. The first is used for measuring the size of holes, and the last for measuring the outside of cylindrical objects, and they are called internal and external cylindrical gages. They are generally used as standards alone, from which other tools and gages are made.

Cylinder Head. Figs. 594-608; 16, Figs. 697-701. A metal cover for the end of a cylinder, held on by cylinder bolts or cylinder studs. The cylinder head through which the piston rod passes is commonly termed the back cylinder head, and the other the front cylinder head. In tandem compound locomotives the head common to the high-pressure and low-pressure cylinders is called an intermediate cylinder head. See Cylinder, Back Cylinder Head and Cylinder Castings.

(Air Pump.) The cylinder heads of an air pump are known as upper and lower steam cylinder heads and upper and lower air cylinder heads.

Cylinder Head Casing. 14, Figs. 101-140. A casing of sheet iron or steel placed over the cylinder heads to protect the lagging from injury and to produce a finished effect. See Casing.

Cylinder Head Eye Bolt. A bolt screwed into a cylinder head with a ring on its outer end for convenience in handling in the shop.

Cylinder Levers (Air Brake). Fig. 1586; 5 and 6, Fig. 1562. Two levers which are connected together by a tie rod attached near their centers. One end of one lever is attached to the crosshead of the brake cylinder push rod, and the corresponding end of the other is attached to a bracket on the brake cylinder head at the opposite end of the cylinder. The other ends of the levers are connected with the floating levers by rods.

Cylinder Lever Bracket (Air Brakes). A T-shaped piece of iron bolted to the front cylinder head, to which one of the brake levers is attached.

Cylinder Lever Guide (Air Brakes). 12, Fig. 1562. A guide or support for the cylinder lever. It is usually made of an iron rod bent to a U-shape and bolted to the under side of the center sills of the tender.

Cylinder Lever Support (Air Brakes). A wrought iron bar bolted to one of the center sills, on which the ends of the cylinder levers rest.

Cylinder Lubricator. See Lubricator and Sight-Feed Lubricator.

Cylinder Oil Pipe Fitting. A union on the lubricator for the attachment of the cylinder oil pipe.

Cylinder Relief Valve. Fig. 618. A valve set to open at a certain predetermined pressure, to relieve the cylinder of an excess pressure caused by water or steam.

Cylinder Saddle. See Saddle.

D

D-Valve. A steam chest valve, so-called from its shape which resembles the letter D. See Slide Valve and Piston Valve.

Dampener. Fig. 2061. A device applied to a spring to cause it to act more slowly when the load is suddenly applied or removed. A device to make a coil spring do the work of an elliptic spring.

A muffler. See Exhaust Muffler.

Damper. See Ash Pan Damper.

Damper Regulator. 19, Fig. 261. A lever connected to the dampers of a fire pan on an oil burning locomotive for the purpose of regulating the amount of air to be admitted to the firebox.

Dash Plate. 64, Figs. 152-186. A plate or plates placed across the inside of a boiler above the fire tubes to prevent the water surging when the locomotive is in motion. Also called swash plate.

Dash Pot (Intercepting Valve). 12, Figs. 609-612. A chamber in the intercepting valve chamber head fitted with a piston connected to the intercepting valve Its purpose is to form a partial vacuum and prevent slamming of the intercepting valve.

Dash Pot Head (Intercepting Valve). 13, Figs. 609-612. The metal cover for the dash pot.

Dash Pot Piston (Intercepting Valve). 3, Figs. 609-612. A piston attached to the intercepting valve stem and working in the dash pot.

Dead Block. A single wooden block or stick of timber attached to the end sill of tenders to protect persons from injury, by preventing the cars and tender from coming together in case the drawbar or its attachments should give way.

Dead Grate. 14, Figs. 443-465; Figs. 445-446. A portion of a grate that is made without any openings for the admission of air. Generally placed near the ends or sides of a firebox, as in those places the combustion is less active than in the center, and with open grates the fire cannot be kept hot enough. Also called Dead Plate. See Grate.

Dead Lever (Foundation Brake Gear). 13a, Figs. 1913-1920. The one of a pair of truck brake levers to which the brake connecting rod is not attached. The upper end of the dead lever is confined within a dead lever guide, or brake lever stop, which is provided with pins to adjust the end of the brake lever as the brake shoes wear. The lever to which the power is first applied through the brake connecting rod is termed the live lever.

Dead Lever Guide or **Brake Lever Stop** (Brake Gear). Figs. 1589, 1590; 15, Figs. 1913-1920. See above.

Dead Plate. 14, Figs. 443-465; Figs. 445, 446. See Dead Grate.

Dead Wood. See Dead Block.

Decapod Locomotive (2-10-0). Figs. 1, 45, 116. A locomotive having a two-wheel front truck and five pairs of coupled driving wheels, but no trailing truck. Used for heavy freight service.

Decimal Gage. At the convention of 1895 the following was adopted by the American Railway Master Mechanics' Association as a standard decimal gage:

1. The micrometer caliper should be used for laboratory and tool-room work, and in the shop when specially desired.

2. The solid notch gage should be used for general shop purposes.

3. The form of this gage shall be an ellipse whose major axis is 4 in., the minor axis 2.5 in., and the thickness .1 in., with a central hole .75 inch in diameter.

4. The notches in this gage shall be as follows:

.002″	.022″	.060″	.110″
.004″	.025″	.065″	.125″
.006″	.028″	.070″	.135″
.008″	.032″	.075″	.150″
.010″	.036″	.080″	.165″
.012″	.040″	.085″	.180″
.014″	.045″	.090″	.200″
.016″	.050″	.095″	.220″
.018″	.055″	.100″	.240″
.020″	.....	.....	.250″

5. All notches to be marked as in the above list.

6. The gage must be plainly stamped with the words "Decimal Gage" in capital letters 2 in. high, and below this the words "Master Mechanics."

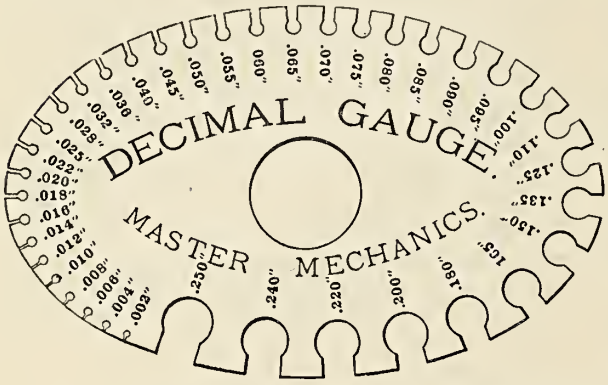

7. In ordering material, the term gage shall not be used, but the thickness ordered by writing the decimal as in above list. For sizes over ¼ in., the ordinary common fractions may be used.

Deck. 131, Figs. 101-140. The floor or platform of the cab on which the engine crew stand. Called also foot plate and foot board. It is commonly made of cast iron and serves to tie the back ends of the frames together, and to form a holder or drawhead for the tender drawbar.

Deck Beam. A beam in the form of an inverted T, with a round knob on the upper end, used in some forms of steel tender construction.

Deck Plate. 85, Fig. 2147; Fig. 554. A plate used to form a floor or deck over an open space as at the front end of the frames of electric locomotives.

Deflector. 18, Figs. 361-407. An iron plate in the smokebox pointing downwards from just above the top rows of tubes to deflect or throw down the sparks and cinders to the bottom of the smokebox. More commonly diaphragm.

Deflector Angle. 17, Figs 361-407. An angle secured to the inside of a smokebox to hold a deflector in position.

Deflector Plate. See Deflector.

Diamond Boiler Seam. Fig. 213. A type of boiler joint in which the ends of the plates are welded, and a large diamond-shaped welt is riveted to the inside of the seam, the outside welt being of the usual design.

Diamond Smoke Stack. Fig. 414. A smoke stack for wood burning locomotives designed to prevent sparks from being blown out through the stack. The cap is made conical or diamond shaped and sometimes has a netting mounted across the top. A baffle plate is put in over the cylindrical body of the stack to break up the large sparks which strike it.

Diamond Truck. Fig. 1917. A tender truck with iron side frames consisting of two or more Arch Bars, which see, and a pedestal tie bar. The spaces between the arch bars are diamond shaped, hence the name. The journal boxes are rigidly bolted to the side frames.

Diaphragm. A thin wall or partition.

(Valves.) Some valves are regulated by diaphragms or diaphragm plates, to which are attached springs, nuts, stems, etc., whose names explain themselves. These diaphragms all operate on the same principle. They are spring plates, which guide the rod and, assisted by spiral springs, cause the attached valves to seat or unseat at a fixed pressure.

(Smokeboxes.) 14, Figs. 361-407. In a locomotive smokebox, a diaphragm, called a Deflector or baffle plate, is placed just ahead of the tube sheet to deflect sparks to the bottom of the smokebox and to equalize the draft through the tubes.

Diaphragm Apron. 33, Figs. 361-407. A plate projecting downward from the front end of the table plate in a smokebox for the purpose of throwing the sparks downward before they encounter the netting.

Direct Current (Electricity). An electric current that flows in one direction continuously as distinguished from an Alternating Current.

Discharge Pipe (Air Compressor). The pipe by which compressed air is conveyed from the air compressor to the main reservoir.

Discharge Valve (Air Compressor). The valve through which the compressed air passes to the main reservoir. On the steam-driven air compressor it is usually called an air valve. See Equalizing Discharge Valve.

Distance Block. A short, thick block placed between two or more objects to keep them apart, or to preserve an interval of space between them, as truck bolster distance block, etc.

Distributing Valve (Air Brake). Figs. 1435, 1436. The principal feature of the Westinghouse ET locomotive brake equipment. In general use, the term is often employed to include the distributing valve proper and the double chamber reservoir to which it is attached. It consists of a body in which are two sets of movable parts; the lower set, called the equalizing portion, is very similar to a plain triple valve and causes the automatic application of locomotive brakes; the upper set, called the application portion, consists of a piston and two slide valves, one of which controls the admission of air to the locomotive brake cylinders, and the other controls the exhaust. The valve has connections to the main reservoir, brake pipe, brake cylinders, automatic and independent brake valves. The two chambers of the double chamber reservoir are called the pressure chamber (larger), and application chamber (smaller). The former corresponds to the auxiliary reservoir usually installed with any triple valve; the latter is always in communication with the piston chamber in the application portion; and its pressure determines that in the brake cylinders. This valve and its reservoir performs the functions of all triple valves, auxiliary reservoirs, double check valves, high speed brake reducing vales and some other details always required in other and older locomotive equipments. See Triple Valve, Auxiliary Reservoir.

Dividing Attachment (Vacuum Brake). A device to regulate the application of the brakes to either the locomotive or train, or both. See Ejector.

Dome. 90, Figs. 101-140; 20, Figs. 152-186; Figs. 247-252.

A cylindrical reservoir on top of a boiler and secured to it by riveting through a heavy flanged collar. In recent designs the dome shell has been made in one pressed steel piece and riveted directly to the boiler shell. Its purpose is to collect and hold dry steam. The dry steam passes through the throttle valve, located in the dome, dry pipe and steam pipes to the steam chest from which it is delivered to the cylinders, through the valves and steam ports. See AUXILIARY DOME.

Dome Base. 19, Figs. 152-186. The flange riveted to the boiler shell around the opening for the dome, and to which the dome shell is riveted. Also called DOME FLANGE and DOME COLLAR.

Dome Brace. A brace secured inside the dome at one end and to the crown bars at the other, to support and strengthen the sides of the dome. Used only in wagon top boilers.

Dome Brace Foot. A lug or projection on the lower end of a dome brace for securing it to a crown bar.

Dome Cap. 22, Figs. 152-186. See DOME RING.

Dome Casing. 92, Figs. 101-140; 23a, Figs. 152-186; Figs. 250, 252. The outside sheathing or jacket of a dome used to protect the lagging and to present a finished appearance.

Dome Casing Base. The base fitted to the boiler jacket on which the dome casing rests.

Dome Casing Ring. The cylindrical section of a dome casing between the base and the top.

Dome Casing Top. 93, Fig. 101-140. The sheet steel, hemispherical cover on a steam or sand dome. It is usually fitted flush with the dome casing ring.

Dome Collar. See DOME BASE.

Dome Course. 40, Figs. 152-186. That plate or course of a boiler in which the dome is located. In a wagon top boiler it is identical with the roof sheet and sometimes the conical course as the case may be. In an extended wagon top, straight top or conical type boiler it may be one of the other courses.

Dome Cover. 94, Figs. 101-140; 23, Figs. 152-186. The lid which is bolted to the dome ring and forms top of dome.

Dome Joint Ring. 19, Figs. 152-186. A flanged ring riveted to an opening in the top of a boiler and to the base of the dome to fasten the dome to the boiler shell. It is usually reinforced by another ring, inside the dome, called a DOME STIFFENING RING.

Dome Liner. 55, Figs. 152-186. A plate riveted to the inside of the boiler shell around the dome opening to strengthen it.

Dome Ring. 22, Figs. 152-186. A heavy cast iron ring riveted to the upper edge of a dome and having a flange to which the dome cover is bolted. Also made of a pressed steel plate riveted to the dome shell and formed in the shape of a cover.

Dome Shell. 21, Figs. 152-186. A plate, either of one pressed steel piece, or several built-up sections which form the dome.

Dome Stiffening Ring. A heavy ring, made of steel boiler plate, riveted to the dome at its base and to the dome joint ring which secures it to the shell of the boiler.

Door. That which closes an opening in a wall or partition. See FIREBOX DOOR, CAB DOOR.

Door Sheet. 128, Figs. 101-140; 6, Figs. 152-186. The back sheet of the firebox which contains the door.

Door Track. A metal bar or guide which supports a sliding door, and upon which it moves, or by which it is held in its place. They are either top door tracks or bottom door tracks. The former usually carry the weight of rear cab doors, which are hung thereon by door hangers.

Double Check Valve (Air Brake). Figs. 1447, 1549. A check valve having two seats so arranged that air flowing in past either seat cannot flow out past the other, but will pass to a third connection. Such a valve is used as follows:

Fig. 1404. With the combined automatic and straight-air locomotive brake equipment, a double check valve is placed between the triple valve and brake cylinder, the triple valve being connected to one seat, the straight-air pipe to the other seat, and the brake cylinder to the side connection. During an automatic application, air can flow from the triple valve to the brake cylinder, but not to the straight-air pipe. And during straight-air applications, air can flow directly into the brake cylinder, but not to the triple valve.

With the Westinghouse ET locomotive brake equipment on a double end electric locomotive a special double check valve is used in the brake cylinder pipe, so that if the flexible hose connections to either cylinder should burst, the check valve would prevent the loss of braking power on the other end. In this check valve, the valve is held midway between the two seats, when the pressures are balanced, by two springs which are not strong enough to resist an unbalanced air pressure, but will prevent the connection to either cylinder becoming closed in ordinary service.

Double Cut-out Cock or **Double Cock** (Air Brake). Fig. 1467. A special cut-out cock having connections and passages for two separate lines of pipe, so that one movement of the cock handle will affect both pipes at the same time.

Double-Ender Locomotive. Figs. 24, 25, 30-32, 106. A locomotive adapted to run equally well in either direction. Usually the tender is supported on an extension of the main frames and guiding trucks are placed at both ends of the locomotive. Used for switching, suburban and branch line service where turntables are not available.

Double Heading Pipe (Air Brake). The pipe which connects the distributing valve exhaust to the automatic brake pipe.

Double Lip Retaining Ring (Steel Tired Wheels). One of the common methods of attaching a steel tire to the center of the wheel.

Double Plate Wheel. A cast iron wheel, the rim and hub of which are united by two cast iron plates or discs. Wheels in which the double plates extend only part way between the hub and rim, the connection being made by a single plate, are often called double plate wheels. See WHEEL.

Double Pressure Control (Air Brake). Fig. 1406. Sometimes called high-pressure control. An arrangement of the pressure governing mechanisms of the locomotive brake equipment by means of which the brake pipe and main reservoir pressures may be limited to either one of two pressures determined by the position of the handle of the REVERSING COCK, which see. The usual pressures used in this equipment are 70 lbs. brake pipe with 90 lbs. main reservoir pressure; 90 lbs. brake pipe with 110 lbs. main reservoir pressure. It is designed primarily for use on freight engines to

enable the engineer to increase the braking power on long trains, when descending grades, or to accommodate the braking power to the conditions of light and loaded cars.

Double Pressure Retaining Valve. See PRESSURE RETAINING VALVE.

Dovetail. "A flaring tenon adapted to fit into a mortise having receding sides so as to prevent the withdrawal of the tenon in the directions to which it will be exposed to strain."—Knight.

Draft Beams. 91, Figs. 2145-2147. Sometimes called center draft beams. Bars or beams extending back from the end bumper beam to some point of support, usually the transom or body bolster, and to which the draft rigging is attached. Especially used on electric locomotives.

Draft Connection. Figs. 1852-1856. The whole arrangement of rods, buffers and springs by which a tender is attached to a locomotive and which transmits the tractive effort to the tender and the following train.

Draft Gear. Figs. 1857-1903, 1083. A term used to designate the apparatus used under a tender or at the front of an engine to dissipate the shocks due to coupling and to provide an elastic resistance in pulling the train. Strictly speaking, the term draft gear includes only the springs of friction blocks and other parts enclosed within the coupler yoke. Draft gear and attachments include the entire apparatus by which a car is drawn, with the exception of the coupler or drawbar. Some makers furnish the complete gears, including springs, follower plates, cheek plates, yoke, etc. Others only the special castings or parts required, without springs, bolts or other parts which are more or less standard. See FRICTION DRAFT GEAR, LEVER DRAFT GEAR. See LOCOMOTIVES, INSPECTION and TESTING.

Draft Pan. See FIRE PAN.

Draft Pipe. See PETTICOAT PIPE.

Draft Spring. Fig. 1902. A spring attached to a COUPLER or DRAWBAR, which see, to give elasticity. They are usually so arranged by means of follower plates at each end as to resist either tension or compression. The usual size for draft springs is 7 or 8 in. in diameter and 8 in. in length, double coil spiral springs.

Drag Plate Casting (British). See DRAWHEAD.

Drain Cock. (Air Compressor.) A small cock or faucet in the steam cylinder of an air pump to draw off water condensed from the steam.

(Air Brake). See RESERVOIR DRAIN COCK.

Drain Cup or **Drip Cup** (Air Brake). A globular receptacle under a triple valve to collect water of condensation.

Drawbar. 5, Fig. 1852; Figs. 1854, 1855, 1895. A rod or bar for connecting the engine and tender, secured in the drawhead by a pin.

A heavy bar resting on the pilot and pivoted to a bracket or drawhead on the front bumper beam, with a hole or slot in the outer end for a coupling pin. Not commonly used now, being superseded by some form of pilot coupler. See COUPLER. The term drawbar is often used synonymously with coupler. See LOCOMOTIVES, INSPECTION and TESTING.

Drawbar Bolt. Fig. 1854. An iron bolt or spindle which connects a drawbar to a draft spring and follower plates, passing through the center of the spring. A tail bolt. See DRAWBAR.

Drawbar Carry Iron. Fig. 1780. Often contracted to carry iron or carrier iron. A U-shaped iron strap bolted to the under side of the end sill and supporting the outer end of the drawbar or coupler. Also called STIRRUP.

Drawbar Centering Devices. Figs. 1884-1885. Devices which take the place of a drawbar carry iron, and are designed to normally keep the coupler in the center line of draft while allowing it to move from side to side in rounding curves.

Drawbar Follower Plates. Two iron plates which bear against each end of a draft spring and transmit the tension and compression on the drawbar to the draft springs and to the draft sills.

Drawbar Follower Stop. A casting bolted or riveted to the center sills to act as a stop to the motion of the follower. Also called cheek plate.

Drawbar Guide. Cast-iron lugs, or wrought plates, bearing against the sides of draft or center sills over the drawbar carry iron, to resist lateral strains and protect the sills from wear.

Drawbar Pocket. See DRAWBAR SPRING POCKET.

Drawbar Pocket Guide. A casting bolted to the draft sills and serving as a guide or chafing plate for the DRAWBAR SPRING POCKET.

Drawbar Safety Lug. A horn on the upper side of a drawbar to bear against the end sill or a single dead block on the end sill, to relieve the draft spring and attachments from excessive buffing strain. Called coupler horn.

Drawbar Spindle or Stem. The iron drawbar bolt which passes through the center of the draw spring and follower plate. A tail bolt.

Drawbar Spring Pocket. The space at the back end of a spring pocket or strap drawbar which receives the draft springs and follower plates.

Drawbar Stem. See DRAWBAR BOLT.

Drawbar Stirrup. See DRAWBAR CARRY IRON.

Drawbar Stop. A casting which limits the movement of the drawbar followers, and is bolted to the draft sills. The castings for the drawbar stop are sometimes made long enough to bear against the body bolster, or a filling block is interposed between it and the drawbar, thus relieving lugs and bolts of strain.

Drawbar Yoke. The yoke that encloses the draft spring and is bolted to the end of the drawbar. See COUPLER YOKE.

Draw Gear. Figs. 1852-1856. The arrangement by which the engine transmits its power to pull the tender. A rod or bar, called a drawbar, is secured in the engine drawhead casting by a pin; and its other end rests in a similar casting secured to the forward end of the tender frame. See DRAFT CONNECTION and DRAFT GEAR.

Drawhead. A socket or receptacle for the end of the drawbar, which is held in place by a pin. The front engine drawhead is secured to the bumper, while the back engine drawhead, holding the tender drawbar, is usually cast in one piece with the deck or foot plate. Called in Great Britain a drag plate casting.

Draw Pin. A rod or pin passing through a drawhead and a drawbar to hold them together.

Draw Pin Key. A pin or cotter passing through a slot in the bottom end of the draw pin.

Draw Spring. See DRAFT SPRING.

Drifting Valve. Figs. 290, 624, 643, 644. A valve by means

of which steam is admitted to the steam chest when the throttle has been closed and engine drifting. It may be located in either the steam chest, throttle valve or other parts of the locomotive.

Drilling. A term used for SWITCHING, which see, or making up trains. Regulating is another term sometimes used. The British term is marshalling or shunting.

Drip Cup (Air Brake). A receptacle inserted in the brake pipe of each car to receive water condensing therein. A drain cup.

Drip Valve. A globe or angle valve or a plug cock used to draw off the water of condensation from a pipe, pocket, cylinder or reservoir to prevent damage by freezing.

Driver. See DRIVING WHEEL.

Driver Brake. Figs. 1554, 1558, 1559. A brake, actuated by steam, compressed air or vacuum apparatus, applying brake shoes to the driving wheels of a locomotive. They are either equalized brakes or CAM BRAKES, which see. See AIR BRAKE.

Driver Brake Bell Crank. 2, Fig. 1554. A bell crank attached to a locomotive frame for transmitting the movement of the driver brake cylinder piston rod to the driver brake rod. It is pivoted on a heavy casting bolted to the frame called a brake bell crank bracket.

Driver Brake Bell Crank Bracket. See DRIVER BRAKE BELL CRANK.

Driver Brake Connecting Rod. 8, Fig. 1554. A rod fastened to the driver brake cylinder lever or a brake equalizer at one end, and to the brake hanger of a driving wheel at the other end. They are distinguished as front, second, third and fourth, according to the driving wheel to which they extend.

Driver Brake Connecting Rod Equalizer. 9, Fig. 1554. A short metal bar to which the brake rod of one of the driving wheels is attached at a point between the ends. One end of the equalizer is secured by a short link to the hanger or lever of the forward driver brake, and the other end of the equalizer is secured to the second driver brake rod. In Fig. 1560, the floating lever 9 acts as an equalizer.

Driver Brake Cylinder (Air Brake). 60, Figs. 101-140; Figs. 1444, 1514, 1515. The brake cylinder used to operate the driving wheel brakes. See BRAKE CYLINDER.

Driver Brake Cylinder Angle. An angle casting bolted to the frame of a locomotive to support a driver brake cylinder. In some designs it is located at the back end of the frames, and in others is secured to the guide yoke or other frame crossties.

Drive Spring Pocket (Electric Locomotive). See DRIVING PINS.

Driving Axle. 72, Figs. 101-140; Figs. 908-912. An AXLE, which see, on which two coupled driving wheels are mounted. They are classified as front, intermediate, main and back. In four-cylinder balanced compound locomotives and inside-connected engines, the driving axles become crank axles. See Rule 33, LOCOMOTIVES, INSPECTION AND TESTING.

Driving Box. 70, Figs. 101-140; 2, Figs. 913-916; Figs. 913-932; 8, Figs. 933-960. A box-shaped casting of iron or steel, fitted to slide vertically in the jaws or pedestals of the frame, and holding a brass or bearing resting upon the driving axle journal. British, driving axlebox. See JOURNAL BOX. See Rule 37, LOCOMOTIVES, INSPECTION AND TESTING.

Driving Box Bearing. See DRIVING BOX BRASS.

Driving Box Brass. 71, Figs. 101-140; 3, Figs. 913-916; Fig. 925. The bearing in a driving box which rests on the driving axle journal. Also called crown brass.

Driving Box Cellar. 73, Figs. 101-140; Figs. 913, 921. A receptacle in the bottom of a driving box, to hold oil and waste, secured to the box by two bolts called cellar bolts. British, driving axlebox spongebox.

Driving Box Cellar Bolt. 6, Figs. 913-916. A bolt passing through the bottom of the driving box longitudinally and through the oil cellar to hold it in place. Two are used for each box. British, driving axlebox spongebox bolt.

Driving Box Gib. 9, Figs. 913-916. A thin sheet of soft bearing metal either cast or riveted on the pedestal face of a driving box.

Driving Box Hub Liner. 1, Figs. 913-916 A thin sheet of soft bearing metal either cast or riveted on the face of a driving box that comes in contact with the driving wheel hub. Sometimes attached to the driving wheel hub.

Driving Box Lubricator. Fig. 1318. A device, usually forming part of the driving box cellar, and by means of which the driving axle journal is lubricated.

Driving Box Saddle. 151, Figs. 101-140; 5, Figs. 933-960; Figs. 937, 946, 956, 959. A U-shaped piece of iron resting upon the driving box and forming a base for the support of a driving spring; or hanging downward to hold the spring below the box on engines having underhung springs. Also called driving spring stirrup and driving spring seat. British, driving axlebox saddle.

Driving Box Shoe. 219, Figs. 101-140; Figs. 926-929. See DRIVING BOX WEDGE.

Driving Box Wedge. 288, Figs. 101-140; Figs. 926-929. A strip of iron or steel fitted to the inside of the legs or pedestals of the frame to protect them from wear by the sliding up and down of the driving boxes. The frame legs are usually built with one slightly inclined toward the other, and the wedges are made, one with parallel sides, and the other wedge-shaped. The wedge bearing against the sloping leg can be moved vertically by set screws to take up the wear of the box. The wedge with parallel sides is called a shoe. British, driving axlebox wedge or shoe. See Rule 38, LOCOMOTIVES, INSPECTION AND TESTING.

Driving Box Wedge Bolt. Figs. 930, 931. A bolt passing through the pedestal brace for adjusting the wedge so as to take up the wear of the box.

Driving Crank. See CRANK.

Driving Horn Block (British). See PEDESTAL.

Driving Pins (Electric Locomotive). Short steel pins resembling crank pins fastened on the end of the armature quill of the Westinghouse A. C.-D. C. electric locomotive. These pins enter cylindrical pockets formed in the inside face of the driving wheel hub, and transmit the motion of the armature to the wheel through the medium of springs inserted between pin and pocket.

Driving Spring. 80 and 155, Figs. 101-140; 1, Figs. 933-960; Figs. 966, 968-972. A half-elliptic spring built up of flat steel plates and having a saddle or stirrup resting on the driving box and the ends connected to an equalizer is the common form of driving spring. In many designs, however, a helical spring bears upon the driving box indirectly by having an equalizer that rests on the box and is connected at one end to the spring. In this case, also, the spring may be helical

or half-elliptic. These springs are also known as front, second, third, fourth, etc., according as they transmit their portion of the weight to the front, second, third or fourth driving wheel counting from the front.

Driving Spring Hanger. 82, Figs. 101-140; 2, Figs. 933-960; 18, Figs. 976-987. A bar of iron or steel secured at one end to a driving spring while the other is connected to either the end of an equalizer or to a spring set on the frame.

Driving Spring Hanger Seat. That part of the frame or of an equalizer on which a driving spring hanger is supported or suspended.

Driving Spring Staple. See Spring Band.

Driving Spring Stirrup. See Driving Box Saddle.

Driving Tire. The tire of a driving wheel. See Tire.

Driving Wheel. 114, Figs. 101-140; 2, Figs. 697-701; Figs. 897-907. Any one of the wheels under a locomotive which is coupled to the main or side rods and transforms the power developed in the cylinders to tractive effort. British, coupled. See Wheel. See Rule 47, Locomotives, Inspection and Testing.

Driving Wheel Adjustable Hub Plate. Fig. 901. A plate attached to the hub to take up the wear between it and the driving box. The adjustment is made by means of compressed grease, the pressure being maintained by screwing in a grease plug on the outside of the wheel hub.

Driving Wheel Balance Weight (British). See Counterbalance.

Driving Wheel Cap. (Electric Locomotive.) A metal plate covering the opening of the outer end of a driving spring pocket.

Driving Wheel Center. Figs. 904-907; Figs. 897-900, 902. See Wheel Center. The circular casting having a central hub, spokes and rim on which a driving wheel tire is shrunk.

Driving Wheel Centers. (A. R. M. M. A. Standard.) In 1907 the following standards were adopted:

Cast steel driving wheel centers should preferably be uncut and shrinkage slots omitted; if cut, slots should be machined out and closed with solid cast-iron liners driven in. No lead or white metal should be used.

For wheel centers 60 inches and over, when the permissible weight of the locomotive will allow, the rims should preferably be cast solid without cores, so as to obtain the maximum section and have full bearing of tires; the section in square inches should be approximately 0.45 of the sectional area of the tire when new.

Driving Wheel Centers and Sizes of Tires. At the convention of the American Railway Master Mechanics' Association, in 1886, the report of a committee was adopted which recommended driving-wheel centers to be made 38, 44, 50, 56, 62 or 66 inches in diameter. In 1887 the recommendations of a committee were adopted, making tire gages manufactured by Pratt & Whitney, Hartford, Connecticut, standards of the Association.

In 1893 the following sizes were added to the standards for large driving wheels: 70, 74, 78, 82, 86 and 90 inches. Reaffirmed in 1891.

In 1907, as a result of letter ballot, 72 inches was adopted as a standard.

Driving Wheel Tires. See Rule 50, Locomotives, Inspection and Testing.

Drop Grate. 15, Figs. 443-465; Figs. 449, 435. A grate bar of large size which can be dropped down independently of the other grate bars for the purpose of dumping the fuel and ashes into the ashpan.

Drum. "A cylinder over which a belt or band passes.

"A chamber of a cylindrical form used in heaters, stoves and flues. It is hollow and thin, and generally forms a mere casing, but in some cases, as steam drums, is adapted to stand considerable pressure."—Knight.

Dry Pipe. 54, Figs. 101-140; Fig. 289; 7, Figs. 317-319. A pipe conveying steam from the throttle valve and throttle stand pipe in the dome to the steam pipes in the smokebox. It is usually placed inside the boiler and supported by hangers riveted to the boiler shell, but on some designs it has been placed outside and along the top of the boiler, in which case it is lagged and jacketed.

Dry Pipe Bridle or Hanger. 89, Figs. 101-140; 65, Figs. 152-186. An iron band or yoke for holding the dry pipe and throttle pipe firmly in line.

Dry Pipe Elbow. 273, Figs. 101-140; 6, Fig. 289. The right-angle bend in the dry pipe at the point where the vertical section of the throttle pipe in the dome joins the horizontal dry pipe running through the boiler to the front flue sheet. In some designs the dry pipe elbow is made in a separate casting and fitted to the dry pipe.

Dry Pipe End. The end of the dry pipe attached to the tee or niggerhead from which the steam pipes lead to the steam chests. Commonly refers to the design in which the dry pipe is secured directly to the tee head without the use of a dry pipe sleeve.

Dry Pipe Sleeve. Fig. 305; 11, Figs. 317-319. A cylindrical casting fitted to the dry pipe at the flue sheet end, and passing through the sheet. It connects the dry pipe to the tee or niggerhead by a ground ball joint.

Dummy Coupling (Air Brake). Fig. 1470. A malleable iron casting of a shape that will fit the hose coupling and attached by a chain to the end of the tender and to the front bumper of the engine, to which the coupling may be connected so as to prevent dust and dirt from getting into the brake pipe as well as to prevent damage to the coupling hose when hanging down.

Dummy Locomotive. Fig. 7. A term sometimes applied to switching locomotives having the boiler and running gear entirely housed. Used for service in public streets.

Dump Grate. See Drop Grate.

Duplex Air Compressor. Figs. 1495, 1496. An Air Compressor, which see, having two steam cylinders of equal diameter and two air cylinders mounted above them with pistons on the same piston rods. The air cylinders are compounded—*i. e.*, the large cylinder draws in air at atmospheric pressure, compresses it to about half the required pressure, and exhausts it into the small or high pressure air cylinder, where it is further compressed to the required reservoir pressure and exhausted into the main reservoir. The steam cylinders are not compounded. See Compound Air Compressor.

Duplex Air Gage (Air Brake). Figs. 1612, 1613, 1437-1439, 1536, 1538. A gage to register simultaneously on the same dial the main reservoir pressure and brake pipe pressure. For this purpose a red hand for the reservoir and black hand for brake pipe pressures are provided. An illuminated duplex air gage (Fig. 1437)

is one often used in electric service, having a small incandescent lamp placed in a concealed reflector forming part of the bezel ring at the top so as to illuminate the dial without throwing light into the cab.

Duplex Check Valve (Train Air Signal). A valve device used with an air whistle and placed between the air supply and the whistle reservoir. It allows air to flow from the supply to the reservoir only when the supply pressure is above a certain fixed amount, while it allows the air in the reservoir to flow back into the supply whenever the pressure of the supply is below that of the reservoir. By this means it is impossible for the operation of the whistle to be a serious drain on the air brake system (which is usually the source of supply), while in case of necessity, when the air brake requires an unusual amount of air, the volume and pressure of the whistle reservoir are available for braking purposes in addition to the main reservoir capacity. See WHISTLE RESERVOIR.

Duplex Compressor Governor (Air Brake). Figs. 1423-1424; Figs. 1498, 1500, 1501. An air compressor governor having two regulating portions by means of which the pressure in the main reservoir may be limited to one of two pressures, depending on which regulating portion is brought into control of the air compressor. The regulation is usually made for 90 pounds low pressure and from 110 to 140 pounds high pressure.

Duplex Main Reservoir Regulation (Automatic Air Brake). An arrangement of connections between the brake valve and duplex compressor governor by means of which a higher main reservoir pressure is obtained during brake applications than at other times, thereby insuring a prompt release and recharging of the brakes.

Dust Guard. Fig. 2016. A thin piece of metal, wood, leather, felt, asbestos or vulcanized fiber inserted in the dust guard chamber at the back of a journal box, and fitting closely around the dust guard bearing of the axle. It is to exclude dust and prevent the escape of oil and waste. Sometimes called axle packing or box packing. Used only on cars and tenders. British, dust shield.

Dust Guard Bearing (Axle). See above.

Dust Guard Chamber (Journal Box). See above.

Dust Shield (British). See DUST GUARD.

Dynamo. 2, Figs. 101-140; Figs. 1689-1695, 1701, 1702; Figs. 1706, 1707. A machine for generating electricity, driven by a small engine or turbine mounted on the boiler or smokebox to supply current to an electric headlight.

Dynamo Bracket. A shelf on the boiler to hold the headlight dynamo and engine or turbine for driving it.

Dynamometer Car. A car equipped with apparatus for measuring drawbar pull. See LOCOMOTIVE TESTS.

E

Eccentric. 179, Figs. 101-140; 9, Figs. 648-761; 32, Figs. 697-701; Figs. 706, 709. A disk, keyed to a shaft or axle, whose center does not coincide with the center of the axle. It rotates inside a ring called an eccentric strap which is fastened to the eccentric rod and thereby imparts motion to a link, rocker, or other device for moving a valve in the steam chest.

Eccentric Bolts. Two bolts used to hold together the halves of an eccentric strap.

Eccentric Bolt Key. A split key, or cotter, fitted through the shank of an eccentric bolt to hold the nut in place and prevent its working loose.

Eccentric Crank (Walschaert Valve Gear). 257, Figs. 101-140. A short arm rigidly secured to the outer end of the main crank pin in such a position that the end of the eccentric crank travels in a circular path of smaller diameter than the path of the main crank pin. The eccentric crank has at its outer end a pin or bearing for the eccentric rod brass, and the eccentric rod being connected to the link, moves the valve through the medium of the radius bar or rod.

Eccentric Key. A key driven into a keyway between an eccentric and a driving axle to hold the eccentric securely in its place.

Eccentric Oil Cup. A receptacle for containing a lubricant for an eccentric. Sometimes screwed into the eccentric strap and sometimes forged or cast on it.

Eccentric Rod. 258, Figs. 101-140; 11, Figs. 648-761; 34, Figs. 697, 701; Fig. 731. A rod fastened at one end to an eccentric strap or crank and at the other connected to either ends of the LINK, which see. It transmits the motion of the eccentric to the link.

Eccentric Rod Pin. 31, Figs. 648-761. A pin or pivot passing through a fork forged at the end of an eccentric rod and an eye or hole in a lug on a link.

Eccentric Rod Safety Strap. A rod fastened across the engine, below the frames, to support the eccentric rods and prevent their dragging on the track in case of breakage of a rod, pin or strap.

Eccentric Sheave (British). See ECCENTRIC.

Eccentric Strap. 271, Figs. 101-140; 10, Figs. 648-761; 33, Figs. 697-701; Fig. 710. A ring fitting on an eccentric and cast in two parts, with the inner surface grooved or channeled to fit the circumference of the eccentric. The eccentric strap transforms the rotary motion of the eccentric to a reciprocating motion at the end of the eccentric rod.

Eccentric Strap Drip Plug. A plug tapped into a recess or pocket in an eccentric strap, to serve as an oil receptacle.

Eccentric Strap Filling Piece. A thin strip of metal inserted between the edges of the eccentric straps where they are bolted together to provide adjustment for the wear of the strap and the eccentric.

Eccentric Strap Liner. A brass or composition ring inserted between the eccentric and its strap to furnish a wearing surface that can be easily and cheaply replaced.

Eight-Wheel Locomotive (4-4-0). See AMERICAN TYPE LOCOMOTIVE.

Eight-Wheel Switcher (0-8-0). Figs. 1, 16-18, 104. A locomotive having four pairs of coupled driving wheels, but no front or trailing truck. Used for heavy switching service.

Ejector. An appliance for operating a vacuum brake by exhausting or "ejecting" air. It consists essentially of a pipe placed in the center of a surrounding shell or casing, with an annular opening between the pipe and the casing. When the current of steam is admitted at the lower end and escapes at the upper end, the air in the casing is drawn out through the annular opening by the current of the escaping steam. The space is connected by a pipe with the appliances on the cars for operating the brakes. Suitable valves are also

used in connection with the ejector to shut off and admit steam and air. A muffler is used to render noiseless the escaping steam. It consists simply of a box of small round balls, like shot, through which the steam must pass to escape. In the latest type a combination ejector is used having two ejector pipes, one a small one, which is kept in action continuously to maintain the vacuum in the brake pipe and a large one for use in quickly releasing the brakes after a stop.

Elbow. A short L-shaped cast iron tube for uniting the ends of two pipes, generally at right angles to each other.

Elbow Rest (British). See Arm Rest.

Electric Compressor Governor (Air Brake). Figs. 1459-1461. An adjunct to a motor-driven air compressor, designed to open or close automatically the motor circuit when the air pressure falls below certain predetermined limits; these limits are usually 95 and 80 pounds for ordinary service, and 125 and 110 pounds for high speed service. Its function is to maintain the air pressure in the main reservoir within the limits specified. See Electro-Pneumatic Compressor Switch.

Electric Headlight. Figs. 1689-1707. A headlight using electricity generated by a dynamo on the locomotive.

Electric Locomotive. Figs. 2101-2201. A self-propelled vehicle, running on rails and having one or more electric motors that drive the wheels and thereby propel the locomotive and train. The motors obtain electrical energy from a rail laid near to, but insulated from the track rails, or from a wire suspended above the track, contact with the wire being made by a trolley or wheel on the end of a pole mounted on top of the locomotive. The electric rail, called a third-rail, or the trolley wire, is supplied with electricity by generators placed in a central station. From the trolley or the third-rail shoe, electricity is conducted to a regulator or controller by means of which the motors may be started, stopped or driven at any desired speed. Electric locomotives are built either with motors mounted so as to drive the axles through the medium of gear wheels, connecting rods, or with the motor armature mounted directly on the axle. In the two latter cases the motor is called a gearless motor. The pressure or voltage at which electric locomotives are operated is 500 to 650 volts, direct current; and from 1,800 to 11,000 volts if alternating current is used. In this case, a transformer is placed on the locomotive which reduces the voltage from that of the trolley wire to a value suitable for the motors. Electric locomotives may be built with every axle directly driven by a motor, and thus the total weight may be made available for adhesion. In addition, two or more locomotives may be coupled and the wiring of their motors and controllers so connected that all may be operated by the controller of any one. For certain purposes locomotives are built to be operated by storage batteries. This arrangement is only practicable for yard or switching work, where the batteries can be conveniently recharged from an electric central station.

Electric Motor. See Motor.

Electric Motor Car. Fig. 2233. See Motor Car.

Electric Steam Generator. Fig. 2144. A small boiler in which the water is heated by electricity. Used on electric locomotives for generating steam for the heating of cars in the train.

Electro Pneumatic Compressor Switch. Fig. 1462. A device used in conjunction with the electric compressor governor in the governor synchronizing system for insuring uniform compression labor. Its operation is controlled by the governor and its function is to automatically open or close the circuit to the motor driven air compressor when the pressure in the main reservoir line falls below a predetermined minimum or rises to a predetermined maximum, respectively, which pressures are determined by the setting of the governor.

Electro-Pneumatic Signal System. Fig. 1478. An electrically-operated train air signal system, adapted for either single cars or trains which may or may not carry trailers and provides means for signalling to the motorman from any part of the train and in as rapid succession as desired, the signals being sharp, distinct and coincident with the pulling of the signal cord. The system is so designed that, if desired, the whistle on each end of every car in the train may be sounded from a signal given from any part of the train. The equipment includes a conductor's signal switch, combined magnet and bracket, signal whistle, jumper and receptacle, cut-out cocks, fuses, snap switches, etc. For cars which operate in both steam road and electric road service, an electro-pneumatic car discharge valve is used, electric operation being normally used in electric road service and pneumatic operation in steam road service.

Elliptic Spring. Figs. 2055, 2059, 2062-2064. A spring of elliptical form made of two sets of parallel steel plates of constantly decreasing length. Such springs are frequently used for bolster springs for tenders. Half-elliptic springs are used for locomotive springs. The set of elliptic springs is the total amount of bend or compression of which the spring is capable. The arch differs from half the set by the amount of the thickness of the spring band. The connection between the two halves of the elliptic spring at its extremities is termed the scroll. Elliptic springs in service are termed double or duplicate, triplets or triplicate, quadruple, quintuple, sextuple, etc., according to the number of springs used side by side and connected to constitute practically one spring. In tender service elliptic springs are usually duplicates. The length of the spring is the distance from center to center of scrolls when unloaded; and the height, the height over all unloaded.

Emergency Application (Air Brake). A sudden application of the brakes with a maximum force caused by a quick reduction of the brake pipe pressure, due either to a broken hose, opening a conductor's valve or angle cock at some point in the train, or by turning the handle of the engineer's brake valve to the emergency position which opens a large port to the atmosphere and reduces the brake pipe pressure. See Brake Pipe.

Emergency Valve (Intercepting Valve). Fig. 612; 6, Figs. 609-612. A valve in the cylinder saddle operated at will by the engineman and by which the exhaust steam from the high pressure cylinders is allowed to escape to the stack without going to the receiver pipe. Also called high pressure exhaust valve. See Intercepting Valve.

Emergency Valve (Triple Valve). 10, Fig. 1441. See Triple Valve.

Emergency Valve Nut (Triple Valve). 28, Fig. 1441.

Emergency Valve Piston (Triple Valve). 8, Fig. 1441.

Emergency Valve Piston Packing Ring (Triple Valve). 30, Fig. 1441.

Emergency Valve Seat (Triple Valve). 9, Fig. 1441.

End Ladder Clearance. See SAFETY APPLIANCE STANDARDS.

End Plate. 86, Figs. 2145-2147. Also called tail piece. A bar or plate of iron or steel extending across the end of a locomotive and serving to hold the frames together.

End Play. (Of an Axle.) The movement, or space left for movement endwise.

(Of a Truck Bolster.) Usually called lateral motion.

End Sill. 4, Figs. 1762-1766; Figs. 1766, 1779, 1780. The transverse member of the underframe of a tender framed across the ends of all the longitudinal sills. In wooden underframe tenders a heavy timber approximately square in cross-section and in steel underframe tenders either a channel or a pressed plate. If the sill projects out beyond the end sheathing of the body it is known as an outside end sill. If it is framed flush with the sheathing it is usually termed an inside end sill. The British equivalent is HEAD STOCK, which see. See SILL.

End Transom and Pole Piece. 92, Figs. 2145-2147. A casting forming the end transom of the frames and at the same time acting as a pole piece of the motors on an electric locomotive.

Engine. A mechanism for converting the energy in steam, air or other gas under pressure into mechanical energy in the form of motion. Usually restricted to reciprocating engines having a cylinder, reciprocating piston and means for causing the gas under pressure to expand alternately on each side of the piston and move it back and forth in the cylinder. The term includes also the means of transforming the reciprocating motion of the piston into rotary motion, consisting usually of a crosshead, connecting rod and crank. Frequently used as meaning the entire locomotive.

Engine Bumper. See BUMPER.

Engine Efficiency. See LOCOMOTIVE.

Engine Frame. See FRAME.

Engine Oil Heater. 15, Fig. 261; Fig. 268. A chamber surrounding the oil burner supply pipe, to which steam can be admitted for the purpose of heating the oil before it reaches the oil burner. Located underneath the firebox.

Engine Step. 210, Figs. 101-140. A shelf or bracket mounted on a locomotive to assist the enginemen in mounting or dismounting. See STEP and SAFETY APPLIANCE STANDARDS.

Engine Step Brace. A diagonal brace for stiffening or strengthening an engine step.

Engine Truck. Figs. 976-1010. A metal frame carrying journal boxes and supported on one or more pairs of wheels with their axles, mounted under a locomotive and carrying part of the weight of the locomotive. Engine trucks are designated as four-wheel or bogie trucks or two-wheel or pony trucks mounted ahead of the driving wheels, and as two-wheel or four-wheel trailing trucks when mounted back of the driving wheels. With the exception of a few designs of rigid trailing trucks, all engine trucks are made to turn about a central pivot or to allow for side displacement to enable the locomotive to round sharp curves. The term engine truck is usually restricted to the forward truck, the rear truck being called trailer or trailing truck. British, bogie. See TRUCK, TRAILING TRUCK, TENDER TRUCK. See Rule 43, LOCOMOTIVES, INSPECTION AND TESTING.

Engine Truck Journal Box. 3, Figs. 976-987; 5, Figs. 997-1000; Figs. 1035, 1043. A box-shaped casting fitted so as to slide vertically in the jaws or pedestals of an engine truck, and holding a bearing or brass resting upon the journal of the truck axle. See JOURNAL BOX.

In some designs of trailing trucks both boxes are combined in one casting and slide radially in the pedestals.

Engine Truck Box Cellar. 1, Figs. 1037-1043. A receptacle in the bottom of an engine truck box, to hold oil and waste.

Engine Truck Box Cellar Bolt. 6, Figs. 1037-1043. A bolt passing through a truck box cellar and lugs on the truck box to hold it in place.

Engine Truck Brake (Air Brake). Fig. 1556. The arrangement of brake cylinders, levers, beams and shoes for retarding or braking the front engine truck wheels. Usually entirely separate from the driver brakes. Some locomotives have no brakes on the front truck.

Engine Truck Brake Cylinder (Air Brake). 18, Figs. 997-1000; Fig. 1445. The brake cylinder used in connection with the air brake equipment on the forward truck of a locomotive. See BRAKE CYLINDER.

Engine Truck Center Casting. Fig. 986; 14, Figs. 997-1000. A casting bolted or riveted to the top of an engine truck and receiving directly the weight of the forward part of the locomotive. Also called a CENTER PLATE.

Engine Truck Center Pin. See CENTER PIN.

Engine Truck Center Pin Washer. 6, Figs. 976-987. A washer placed on the center pin to form a bearing between the head of the pin and the center plate. See CENTER PIN.

Engine Truck Equalizing Beam. British, bogie compensating beam. See EQUALIZER.

Engine Truck Frame. See FRAME.

Engine Truck King Bolt. See KING BOLT and CENTER PIN.

Engine Truck Oil Cup. A receptacle for holding oil and supplying it to the bearings of the engine truck boxes.

Engine Truck Pedestal. See PEDESTAL and TRUCK PEDESTAL.

Engine Truck Safety Chain. See SAFETY CHAIN.

Engine Truck Safety Chain Eye Bolt. An eye bolt in the front end of the frame on each side of the engine, for the attachment of a chain fastened to the forward corner of an engine truck to restrain its turning in case of derailment.

Engine Truck Side Bearing. 20, Figs. 1032-1033. A metal plate, block or set of rollers attached to the upper part of a four-wheel or six-wheel truck of a tank locomotive of the Forney type. It bears against a corresponding side bearing on the locomotive frame.

Engine Truck Side Bearing Pin. 21, Figs. 1032-1033. A roller forming part of an engine truck side bearing.

Engine Truck Spring. See TRUCK SPRING.

Engine Truck Spring Seat. Fig. 1002. The place at which the weight of the forward end of a locomotive is transferred to the truck axles. At this place a

spring band on each side of the engine truck is secured to the side frame.

Engine Truck Swing Bolster. Fig. 977; 14, 997-1000. A bolster containing the center plate of the truck and swung or suspended by means of short links hung on pivots or pins, from the truck frame. It enables the truck to oscillate transversely to the center line of the engine, and thereby more readily adapt itself to the track when running on uneven or curved track. See Swing Bolster.

Engine Truck Swing Frame. Fig. 980. A casting forming the frame of a truck and to which the swing links are pivoted to support the swing bolster.

Engine Truck Swing Link. 15a, Figs. 997-1000; 21, Figs. 976-987. A link pivoted to the truck frame and to the swing bolster which it supports.

Engine Truck Wheel. See Wheel.

Engineer's Brake Valve (Air Brake). Figs. 1430-1434; Figs. 1503, 1506. A valve in the cab for operating the air brake. It has connections to the main reservoir, brake pipe and equalizing reservoir, as well as to the air gage and the atmosphere. Commonly called brake valve. See Independent Brake Valve.

Engineer's Brake Valve Bracket. A support in the cab to hold the engineer's brake valve.

Engineer's Brake Valve Handle. The lever by which the engineer's brake valve is moved to its various positions.

Engineer's Brake Valve Spindle. The shaft moved by the handle and operating the valve.

Equalizer. 148 and 107 and 84, Figs. 101-140; 12, Figs. 933-960; Figs. 938, 944; Figs. 947, 948, 951, 953, 955. A beam connected at each end to a driving or truck spring, or to the end of another similar beam, for the purpose of distributing the weight of an engine or tender to two or more axles, and to prevent an excessive load being thrown upon one axle by reason of inequalities of the track or roadbed. Called also equalizing beam. Locomotives having two driving axles have these two equalized together, while those with three or more commonly have the forward driving axle equalized with the leading truck. Equalizers are always used for four-wheel engine trucks, and frequently with tender trucks. British, compensating beam. Equalizers are designated as traverse equalizers, when they connect the equalizing systems on the two sides of the locomotive. See also Driver Brake Connecting Rod Equalizer.

Equalizer Fulcrum. The point at which the equalizer or equalizing beam is supported.

A casting bolted to an engine frame to hold an equalizer at a point between its ends. 13, Figs. 933-960, 173 and 85; Figs. 101-140; Fig. 945.

Equalizer Fulcrum Gib. A small wedge or strip passed through a slot in an equalizer fulcrum to hold the beam in place.

Equalizer Fulcrum Pin. 174, Figs. 101-140. A pin or bolt for holding an equalizer. It serves the same purpose as a gib.

Equalizer Fulcrum Plate. A casting or support, bolted on or between the frames, to hold an equalizer fulcrum.

Equalizer Hanger (Engine Truck). A link or support to connect the end of a truck spring with a point on the equalizer, usually near one end.

Equalizer Nut (Engine Truck). A nut on the end of the pin or bolt that passes through the equalizer hanger and the equalizer.

Equalizer Spring. A spring which rests on an equalizing bar and carries the weight of a tender. Single or double coil spiral springs are generally used for this purpose.

Equalizer Spring Seat. A casting which sets on an equalizing bar and on which the spring rests. See Spring Plate.

Equalizer Strap. 220, Figs. 101-140. An iron band or holder bolted to the frame, through which the equalizer passes.

Equalizer Support. The hangers or suspenders that connect the ends of a transverse equalizer to the driving springs.

Equalizer Support Bracket. A casting bolted to a frame crosstie, to hold the fulcrum of the forward transverse equalizer in ten-wheel (4-6-0) locomotives where the drivers are not equalized with the forward truck.

Equalizing Discharge Valve (Air Brake). A part of the engineer's brake valve which, during brake applications, equalizes the pressure in the brake pipe on long trains, and prevents the inequality in braking that would result from the sudden reduction of pressure in the brake pipe and the emergency application thereby produced.

Equalizing Lever. An Equalizer, which see. A floating brake lever is also called an equalizing lever.

Equalizing Reservoir (Air Brake). Fig. 1442. A small cylindrical steel reservoir connected to the brake valve by a pipe. It furnishes a small volume of air for the purpose of keeping the equalizing piston of the brake valve on its seat when making service application of the brake; otherwise, an emergency application would be liable to occur even with a light pressure reduction.

Exhaust. The emission of steam from a cylinder at the end of the stroke after it has been expanded down to low pressure and has done its useful work.

Exhaust Lap. See Inside Lap.

Exhaust Muffler. A device applied to the top of the exhaust pipe in the smokebox. It consists of a deep circular casting with radial apertures through which the steam discharged from the exhaust nozzle must pass. Being divided into many small discharges, the pressure of the exhaust steam is much diminished, the noise softened, and the draft on the fire reduced. A hinged flap or cover, operated by an arm and rod to the cab, enables the engineman to vary the degree of muffling or dampening as desired. Not in general use.

Exhaust Nozzle. 168, Figs. 101-140; 15a, Figs. 361-407; Figs. 394-407. A tip or end piece fitted on the end of the exhaust pipe or pipes, so proportioned to the size of the cylinders, front end arrangements, etc., as to cause the steam passing out of it to produce the desired draft on the fire. In Europe, and to some extent in this country, a nozzle of variable size is frequently used, so as to adjust the force of the blast to the work the engine is doing.

Exhaust Nozzles. At the Master Mechanics' convention in 1899 the following resolutions were carried:

Resolved, That it is the sense of this Association that it is not advisable to use bars in exhaust nozzles. (See page 277, report 1899).

Exhaust Passage (Cylinders). 33, Figs. 579-605, 634-640. Cored openings in a cylinder saddle casting leading

from the steam chest to the base of the exhaust pipe.

Exhaust Pipe. 15, Figs. 361-407; Figs. 396-407. A vertical cast-iron pipe, bolted at its base to the cylinder castings or saddles inside the smokebox, for conducting the steam exhausted from the steam chests to the upper part of the petticoat pipe and stack. See Low Pressure Exhaust Pipe. British, blast pipe.

Exhaust Pipe Base. 292, Figs. 101-140; Fig. 388. A casting attached to the bottom of the smoke box, forming a base for the exhaust pipe and a means of connecting the exhaust pipe to the exhaust pipe of the low pressure cylinders, which is attached by means of a ball joint. The exhaust pipe base forms a stuffing box for the ball joint and allows considerable flexibility between the two pipes, at the same time making a steam tight connection. Used on Mallet locomotives.

Exhaust Pipe Blower Connection. 46, Figs. 361-407. An opening in the side of the exhaust pipe or nozzle to which the Blower Pipe is attached.

Exhaust Pipe Blower Nozzle. Small nozzles set around the edge of the exhaust nozzle and connected to the blower pipe so that steam can be admitted directly from the boiler for the purpose of creating a draft when the locomotive is standing or working slowly.

Exhaust Pipe Bolt. One of the bolts used to secure the exhaust pipe to the cylinder castings.

Exhaust Pipe Combination. Fig. 391. An exhaust pipe by which the high and low pressure cylinder exhaust steam is combined. The low pressure exhaust pipe is made in the usual form with a nozzle at the top and the high pressure exhaust pipe is combined by making a chamber around the usual exhaust pipe causing the steam to pass around the outside of the low pressure exhaust pipe and out at the top through nozzles set around the low pressure exhaust nozzle. Used on Mallet compound locomotives.

Exhaust Pipe Connection. See Auxiliary Exhaust Pipe Connection.

Exhaust Pipe Slip Joint. See Steam Pipe Expansion Joint.

Exhaust Port. 36, Figs. 579-605; 55, Figs. 648-761. An opening in a valve seat or valve chamber at the mouth of a cored passage leading to the exhaust and through which the exhaust steam passes from the cylinder.

Exhaust Relief Valve. See Cylinder By-pass Valve.

Exhaust Steam Passage. 33, Figs. 579-605. See Steam Passage and Exhaust Passage.

Expansion (of Steam). The increase in volume of steam in a cylinder after communication with the steam chest is cut off. This increase in volume is caused by the expansive force possessed by the steam and by reason of which it moves the piston.

Expansion Bracket or Block (British). See Expansion Pad.

Expansion Crosstie. 268, Figs. 101-140; Figs. 518, 520, 547. A casting between the side frames of a locomotive to which the expansion or waist sheet is secured.

Expansion Knee. 41, Figs. 101-140. A light vertical steel plate, fastened transversely to the frames at some point between the cylinder saddles and firebox to support the boiler, and possessing sufficient elasticity, by reason of its thinness, to allow the boiler to move longitudinally when expanding and contracting by reason of change of temperature. It is usual to put one knee at the guide yoke and one or two back of this, near the firebox. Also called expansion sheet, buckle plate and waist sheet.

Expansion Knee Plate. See Expansion Knee.

Expansion Link. An eye bar secured to a bracket on the frame and to a thick plate or casting fastened to the outside firebox sheet. It is for the purpose of holding the back end of the boiler in such a way to the frames as to allow the boiler a little freedom to move longitudinally when expanding and contracting.

Expansion Link Pin. A pin or pivot holding an expansion link to the frame or firebox sheet.

Expansion Link Pin Plate. A plate or casting fastened to the outside firebox sheet to hold an expansion link pin.

Expansion Pad. 157, Figs. 101-140; Figs. 516, 534, 552. A plate or casting bolted to the frames, and holding a corresponding plate or pad which is riveted to the outside firebox sheet or mud ring. These two pads are connected by bolts loosely fitted so as to allow the boiler to expand and contract with changes of temperature. In other forms the piece riveted to the firebox has a narrow projecting flange or lip on which rests another flange on the piece fastened to the frame. The boiler is thus perfectly free to expand longitudinally and to contract, while being held securely to the frames and allowed little movement in a vertical or lateral direction.

Expansion Pad Cap. A bent piece of metal fastened to a locomotive frame and resting on the piece secured to the firebox, these two pieces comprising an expansion pad.

Expansion Pad Liner. An iron plate interposed between an expansion pad and the outside firebox sheet.

Expansion Sheet. See Expansion Knee.

Expansion Stay Bolt. See Flexible Stay Bolt.

Extended Piston Rod. Fig. 818. A Piston Rod, which see, which extends through and in front of the piston and is carried in a stuffing box through the front cylinder head. Its purpose is to provide a front bearing for the rod and to relieve the piston rings and cylinder from wear on the bottom due to the heavy weight of the piston.

Extended Piston Rod Shoe. Figs. 820, 822. A small shoe fitted to the end of an extended piston rod and sliding in the extended piston rod guide.

Extended Piston Rod Stuffing Box. The Stuffing Box, which see, in the front cylinder head through which the extension of the piston rod passes.

Extended Smokebox. A Smokebox, which see, which extends out beyond the cylinder saddle and which has a large volume. It provides a space for the accumulation of sparks. Within certain limits extending the length of the smokebox improves the draft.

Extended Wagon Top Boiler. Figs. 146-149, 163-172. A locomotive Boiler, which see, having a shell made up of one or more cylindrical courses of plates next to the firebox, a conical course tapering down to smaller diameter, the taper being confined to the top and sides, and one or more adjoining cylindrical courses of reduced diameter next to the smokebox. The purpose of putting in the cylindrical course next to the firebox is to provide a place for the steam dome in front of the firebox, and thus do away with crown bar staying over the crown sheet as in a Wagon Top Boiler.

Eye Bolt. "A bolt having an eye or loop at one end for the reception of a ring, hook or rope, as may be required."—Knight. See Brake Beam Eye Bolt, Safety Chain Eye Bolt.

F

Face (of Rim of Car Wheel). The vertical surface of the outside of the rim.

Face Plate. A metal plate by which any object is covered so as to protect it from wear or abrasion.

(Steel Tired Wheels.) The plates connecting the tire and hub, and bolted to each. They are distinguished as front and back face plates.

Factor of Safety. See Boiler Inspection.

Fan Draft. Figs. 370, 371. The method of drafting a locomotive by means of a fan in the smokebox operated by an electric motor.

Feed Pipe. See Suction Pipe.

Feed Pipe Bracket. 184, Figs. 101-140. A projection to hold an Injector Feed Pipe.

Feed Pipe Hose Clamp. A clamp or coupling for holding the feed pipe hose to the metal outlet at the bottom of the tender cistern.

Feed Valve (Air Brake). Figs. 1428, 1429, 1510. Also called reducing valve, slide valve feed valve and slide valve reducing valve. A valve which automatically maintains the pressure of air supplied through the brake valve to the automatic brake system. It may be attached either to the brake valve or placed in the piping between the main reservoir and the brake valve.

Feed Valve Pipe (Air Brake). The pipe which connects the feed valve with the automatic brake valve.

Feed Valve Pipe Bracket (Air Brake). Fig. 1427. A bracket to which the pipe connections to the feed valve are made and to which the feed valve is attached, so that the latter may be removed for examination, repairs or replacement, without breaking any pipe joints.

Feed Valve Pipe Bracket Gasket (Air Brake). Fig. 1426. See Gasket.

Feed Water Heater. A device by means of which the heat in the waste gases from the firebox or exhaust steam can be imparted to the boiler feed water before it is delivered to the boiler for evaporation.

Feed Water Valve Rigging. The arrangement of a cock with a shaft, rod, handle and bracket for turning on or off the supply of water in the injector supply pipe.

Female Center Plate. The body and truck center plates are sometimes called male and female plates, respectively. See Center Plate.

Female Gage. See External Gage.

Ferrule. A copper sleeve fitted over the end of a tube or flue to secure a water-tight joint between the ends of the flue and the hole in the flue sheet.

Field (Electric Locomotive). The magnetic flux set up by an electric current in a conductor.

The magnetic flux between the poles of a motor caused by the current in the field coils.

Field Coil (Electric Locomotive). 4, Fig. 2165. A coil of insulated copper wire or ribbon surrounding an iron pole of a railway motor field magnet. Electric current passing through these magnet coils produces the magnetic flux in which the armature rotates, and which is called the magnetic field.

The iron core and the coil surrounding it together form the field magnet of a motor.

Field Magnet (Electric Locomotive). 2 and 4, Fig. 2165.

Field Magnet Frame (Electric Locomotive). A rectangular metal frame holding the field coil or coils of a motor.

Field Strength. The density of magnetic flux between the poles of a motor.

Filling Bracket (Air Brake). A device which enables a "pipeless" triple valve to be used with a brake cylinder previously arranged for the attachment of the ordinary triple valve having pipe connections. The filling bracket bolts to the pressure head in place of the old triple valve, the "pipeless" triple valve then bolts to the filling bracket; the pipe connections are made to the filling bracket. See Pipeless Triple Valve.

Finger Grate. Fig. 450. A grate made up of grate bars cast with projections or fingers on each side which interlock with the fingers on adjacent bars. When the grate bars are rocked or turned in their trunnion bearings, the fingers disengage and allow the ashes to fall through to the ash pan below. See Rocking Grate.

Fire Bar (British). See Grate Bar.

Firebox. 24, Figs. 152-186; Figs. 189-200. The furnace, or box in which the fuel is burned. The sides and top or crown of a firebox of a locomotive boiler transmit the heat of the fire to the water, and there is an excessively active generation of steam near these parts. The front or forward sheet of the firebox has a large number of holes in which the ends of the flues or tubes are inserted. These tubes carry the products of combustion to the smokebox, and as they are surrounded by water, give up a large amount of heat to the water from the waste gases passing through them. Fireboxes are built of steel plate. See Narrow Firebox, Oil Burning Firebox, Wide Firebox, Wootten Firebox, Belpaire Firebox, Riegel Firebox, Jacobs-Shupert Firebox.

Firebox Back Sheet. 128, Figs. 101-140; 6, Figs. 152-186. The sheet or plate at the back end of a firebox inside, in which the door or doors are located. Also called door sheet.

Firebox Crosstie. A heavy casting secured across the frames to bind them together and at the same time support the mud ring or foundation ring at the front or back of the firebox.

Firebox Crown Sheet. 127, Figs. 101-140; 7, Figs. 152-186. The plate that forms the top of a firebox. See Crown Sheet.

Firebox Door Sheet. See Firebox Back Sheet.

Firebox Heating Surface. The heating surface of a locomotive boiler contained by the inside sheets of the firebox. The heating surface of the combustion chamber and arch tubes is usually included in the firebox surface. It is the area calculated from measurements of the firebox sheets, above the level of the grate, less the total fire area of the tubes, the area of fire doors, and the area of air inlets through the firebox sheets.

Firebox Jacket. The covering or jacket put on outside the lagging on the firebox to hold the lagging in place.

Firebox Outside Sheet. See Outside Firebox Sheet.

Firebox Side Sheet. 68, Figs. 152-186. Either of the sheets forming the sides of a firebox, but generally refers to the inside sheet as distinguished from the Outside Firebox Sheet.

Firebox Steel. See Steel (Specifications for).

Firebox Throat Sheet. 31, Figs. 152-186. A boiler plate flanged to connect the back tube sheet, and in the case of a combustion chamber to connect the bottom plate with the mud ring and firebox side sheets. Also called inside throat sheet.

Firebox Tube Sheet. See Tube Sheet.

Firebox Wrapper Plate (British). See Roof Sheet.

Fire Brick. A kind of brick made of refractory material to resist a high degree of heat, used in a firebox arch to promote uniform combustion and diminish black smoke. Also used in oil burning fireboxes to form a surface against which the burning oil may impinge. See Brick Arch.

Fire Brick Shelf. A shelf made of fire brick and placed at the front end, below the tubes, of a firebox for burning oil. The oil burner is usually placed just below this shelf.

Fireless Locomotive. See Steam Storage Locomotive.

Fire Door. Figs. 231-244. A door usually hinged at the side to close an opening through which coal is thrown on the fire. Some types of door are made to slide and are moved by a lever or handle. Swinging doors are made with a handle and a chain fastened to the boiler head for convenience in opening and closing. A catch or notched rod is provided, on various points of which the handle of the door may be set so as to regulate the amount of air admitted above the fire. Some doors are arranged to be operated by a rod moved by the piston of a small air cylinder, whose valve is fitted with a lever, on the end of which the fireman presses his foot and thus opens and closes the door. See Pneumatic Fire Door.

Fire Door Catch. 2, Figs. 242-244. A catch or hook-shaped projection on the back head on which the fire door handle fastens or latches.

Fire Door Chain Hook. A hook on the fire door to which a chain attached to the back head is secured.

Fire Door Damper. 16, Figs. 242-244. An adjustable plate fitted in a fire door for the purpose of admitting air above the grate through the fire door.

Fire Door Deflector. 15, Figs. 242-244. A cast iron plate above a fire door and projecting into the firebox for the purpose of deflecting the cold air away from the tubes and downward toward the fire. Usually used on oil burning locomotives, but occasionally used on coal burning locomotives having a low brick arch to prevent coal being thrown over it.

Fire Door Diaphragm. A term used for a fire door frame.

Fire Door Frame. 236, Figs. 101-140; 5, Figs. 242-244. A frame fastened to the back head around the fire door hole to which the fire door and liner are secured.

Fire Door Guide. 10 and 11, Figs. 242-244. Part of the door frame of a sliding fire door, in which the fire doors slide.

Fire Door Handle. 4, Figs. 242-244. A bar fastened to the fire door with a handle at one end for the purpose of opening the door.

Fire Door Handle Connecting Rod. 12, Figs. 242-244. A bar or rod connecting the door handle of one sliding door with the other door, thus opening both doors simultaneously.

Fire Door Handle Guide. 3, Figs. 242-244. A guide to keep the fire door handle or latch in position.

Fire Door Hinge. 6, Figs. 242-244. The hinge or pivot secured to the back head and on which the fire door turns to open and close.

Fire Door Hinge Bracket. A bracket secured to the back head to hold the door hinge.

Fire Door Hinge Pin. 7, Figs. 240-244. A rod or pin about which the fire door turns in opening. Part of the door hinge.

Fire Door Hole. 130, Figs. 101-140; 56, Figs. 152-186; Fig. 241. The opening in the boiler back head and firebox door sheet through which the fuel is placed in the firebox. Made in various shapes. Two fire door holes are commonly used with wide fireboxes.

Fire Door Hole Ring. 57, Figs. 152-186. A ring of steel plate conforming to the size and shape of the fire door hole, to which the firebox door sheet and boiler back head are riveted, thus providing a means of joining these two sheets and forming the fire door hole. In some designs the ring is made of a steel or iron bar of sufficient thickness to fill the water space between the back head and firebox door sheet to which it is riveted.

Fire Door Hood. Fig. 246. A curved piece fitted around the upper half of a fire door opening and projecting a few inches from the boiler back head, to protect the eyes of engineer and fireman from the intense glare and heat of the fire. Also frequently used as a stand for oil cans.

Fire Door Latch. 2, Figs. 242-244. A bar on the fire door to hold it in a closed position.

Fire Door Latch Guard. See Fire Door Handle Guide.

Fire Door Liner. See Fire Door Shield

Fire Door Peek Hole. 13, Figs. 242-244. A hole in a fire door through which the fireman can see the fire without opening the door. Commonly used on oil burning locomotives.

Fire Door Peek Hole Cover. 14, Figs. 242-244. The cover for a fire door peek hole.

Fire Door Register. A plate on the fire door with radial openings that can be partially or wholly covered by a sliding or rotating piece, to vary the quantity of air admitted over the fire.

Fire Door Roller. 9, Figs. 242-244. A small roller supporting a sliding fire door.

Fire Door Shield. 8, Figs. 242-244. A plate fastened to the fire side of a fire door to protect the door from the intense heat, and easily replaced when burnt out.

Fire Door Shield Bracket. A bracket secured to the back head to hold the fire door shield.

Fire Extinguisher. Figs. 1218, 1394, 1396. A device frequently attached to a locomotive for the purpose of forcing water from the tender through a line of hose, for the purpose of extinguishing fires in yards and along the track.

Fire Pan. 20, Fig. 261; Figs. 262, 266. A pan made of sheet iron or steel, lined with fire brick and fitted to the bottom of the firebox of an oil burning locomotive, and corresponding to the ash pan on a coal burning engine.

Fire Pan Air Inlets. Small openings in the front and sides of a fire pan, through which air is admitted to aid combustion.

Fire Pan Damper. 24, Fig. 261. A door arranged to regulate the amount of air admitted to a firepan or firebox on an oil burning locomotive.

First Course (of a Boiler Shell). 37, Figs. 152-186. That section of a boiler next to the smokebox. It is made either cylindrical in straight top and wagon top boil-

ers, or shaped like the frustum of a cone in extended wagon top or conical type boilers.

Flag (for Train Signals). The standard size of flags adopted by the American Railway Association is 16 x 16 inches. They may be displayed from a staff on each end of the front bumper, on each side of the smokebox, or on each side of the two rear corners of the tender, where suitable holders are provided.

Flag Fixture. 194, Figs. 101-140. A socket or holder for a flag staff on the front bumper of an engine. For tenders, a slotted flag holder plate is secured to each rear corner, and the flag holder, of cast or malleable iron, has a lug on it that fits the slot. The same type of fixture is also frequently used on each side of the smoke box.

Flange. A projecting rim for attaching a part to any surface. The bent portion of the edge of any piece, as a boiler plate flange. See Dome Ring.

(Of a Wheel.) A projecting edge or rim on the periphery for keeping it on the rail. The inside edge of the flange which connects with the tread of the wheel is termed the throat, and the extreme outer point the toe of the flange.

Flange Lubricator. Figs. 1332-1339. A device by means of which either solid grease or oil can be applied to the flanges of a locomotive driving wheel, for the purpose of preventing flange wear and cutting.

Flange Oiler. See above.

Flange Union. Fig. 1734. A union whose parts are held together by means of flanges and bolts, instead of a union nut. See Union.

Flanger. See Snow Flanger.

Flanges, Distance Between Backs of. At the convention of the American Railway Master Mechanics' Association in 1884, a motion prevailed that the standard distance between the backs of tires for tender, locomotive truck and driving wheels be not less than 4 feet 5¼ inches, nor more than 4 feet 5½ inches. Modified in 1903, as follows:

In the report of the Committee on Flanged Tires in 1900, they concluded it was desirable to set front and back tires on consolidation engines so that the distance between backs of flanges will be 4 feet 5⅛ inches. Therefore, the committee recommends the distance between backs of flanges be changed to read "to be not less than 4 feet 5⅛ inches, nor more than 4 feet 5½ inches."

In 1908 the above standard was made applicable to steel tired engine truck, driver or tender wheels. See Fig. 2269 for gages.

Flexible Boiler. A locomotive boiler made in two parts connected by means of a flexible joint. Used on Mallet locomotives. The rear part of the boiler contains the firebox, tubes and a combustion chamber. The front part contains a superheater, feedwater heater and the smokebox.

Flexible Boiler Joint. A connection between the two units of a flexible boiler, and allowing the forward end of the boiler to swivel when the locomotive is on a curved track. Made in several different designs, namely, double ball joint connection, bellows type connection and single ball joint connection.

Flexible Hose Connection (Air Brake). A short piece of rubber hose with pipe couplings on each end, placed in the discharge pipe from the motor-driven air compressor to prevent any vibrations of the compressor being communicated to the piping and car body, and to prevent any possible stray current from the motor from passing to the piping system. Sometimes this fitting is erroneously called the insulating hose.

Flexible Joint. Figs. 2079-2093. A joint which connects two pipes in such a way as to provide some freedom of motion for each. On articulated compound locomotives a flexible joint is used to connect the steam and exhaust pipes of the set of cylinders on the swinging truck frame. Between engine and tender a flexible joint is used in the steam heat train pipe. See also Steam Pipe Expansion Joint.

Flexible Stay Bolt. 29, Figs. 152-186; Figs. 220-233, 227, 229. A Stay Bolt, which see, designed to permit of slight relative movements due to expansion and contraction of the two plates which it secures, thus preventing bending or shearing stresses in the bolt which would cause it to break.

Flitch Plates. An iron or steel plate sandwiched between pieces of wood and bolted together to give the member which they comprise greater strength. Also called sandwich plates.

Flood Cock. A small globe valve attached to the side of a tender tank with a tee pipe screwed on it for conveying water through rubber hose pipes to the truck boxes in case the bearings run hot. Also called a Cooler Cock, which see. British, jet cock.

Flue. 36, Figs. 152-186; 32, Fig. 423. The fire tubes of locomotive boilers are often designated as flues, but because of the introduction of the superheater it would seem desirable to call the ordinary fire tubes, Tubes, and the large tubes containing the superheater units, Flues. The small tubes making up the superheater units are called superheater pipes.

Flue Plugs. See Tube Plug.

Flue Sheet. See Tube Sheet.

Flush-top Boiler, British for Straight-top Boiler.

Follower. A very common abbreviation for a Follower Plate.

Follower Plate. See Drawbar Follower Plate, Piston Follower. The word "plate" is frequently omitted from these names.

Foot Board. See Foot Plate and Safety Appliance Standards.

Foot Plate. 222 and 131, Figs. 101-140; Figs. 525, 530, 551, 569. A casting secured across the frames at the back end of an engine. Called also foot board, deck, and deck plate.

Foot Plate Key. A wedge-shaped piece of metal securing the foot plate, or deck plate, to the side frames.

Force Feed Lubricator. Fig. 1317. A device by means of which a positive supply of lubricant can be applied to the valves, cylinders and journals of a locomotive by means of pumps.

Forging. A piece of iron or steel, hammered or bent to shape while hot.

Forgings. In 1915 the standard specifications of the American Railway Master Mechanics' Association for locomotive driving and engine truck axles were combined with the standard specifications for locomotive forgings to form specifications for annealed and unannealed carbon steel axles, shafts and other forgings for locomotives. These specifications, which are now standard, are as follows:

1. *Basis of Purchase.*—(a) These specifications cover annealed and unannealed carbon steel driving

axles, engine and trailer truck axles, main and side rods, piston rods, crank pins and miscellaneous forgings.

(b) The manufacturer may, at his option, furnish annealed forgings when unannealed forgings are specified by the purchaser, provided they conform to the requirements specified for unannealed forgings.

I. MANUFACTURE

2. *Process.*—The steel may be made by the open-hearth or other process approved by the purchaser.

3. *Discard.*—A sufficient discard shall be made from each ingot to secure freedom from injurious piping and undue segregation.

4. *Prolongation for Test.*—The manufacturer and the purchaser shall agree upon forgings on which a prolongation for test purposes shall be provided.

5. *Heat Treatment.*—For annealing, the forgings shall be allowed to become cold after forgings. They shall then be uniformly reheated to the proper temperature to refine the grain (a group thus reheated being known as an annealing charge) and allowed to cool uniformly.

II. CHEMICAL PROPERTIES AND TESTS

6. The steel shall conform to the following requirements as to chemical composition:

Carbon	0.38–0.52 per cent
Manganese	0.40–0.75 per cent
Phosphorus, not over	0.05 per cent
Sulphur, not over	0.05 per cent

7. *Ladle Analysis.*—An analysis shall be made by the manufacturer from a test ingot taken during the pouring of each melt, a copy of which shall be given to the purchaser or his representative. This analysis shall conform to the requirements specified in Section 6.

8. *Check Analysis.*—Analysis may be made by the purchaser from a forging representing each melt, which shall conform to the requirements specified in Section 6. Drillings for analysis may be taken from the forging or from a full-sized prolongation of the same, at any point midway between the center and surface, or turnings may be taken from a test specimen.

III. PHYSICAL PROPERTIES AND TESTS

9. *Tension Tests.*—(a) The forgings shall conform to the following minimum requirements as to tensile properties:

For forgings whose maximum outside diameter or overall thickness is not over 12 in. when unannealed and not over 20 in. when annealed.

Size, Outside Diam. or Overall thickness	Tens. Str. lb. per sq. in.	Yield point lb. per sq. in.	Elongation in 2 in., per cent: Inverse Ratio.	Elongation in 2 in., per cent: Not under.	Reduction of area per cent.: Inverse Ratio.	Reduction of area per cent.: Not under.
UNANNEALED						
Not over 8 in.	75 000	0.5 tens. str.	1 600 000 / tens. str.	18	2 200 000 / tens. str.	24
Over 8 to 12 in., inclusive	75 000	0.5 tens. str.	1 500 000 / tens. str.	17	2 000 000 / tens. str.	22
ANNEALED						
Not over 8 in.	80 000	0.5 tens. str.	1 800 000 / tens. str.	20	2 800 000 / tens. str.	32
Over 8 to 12 in., inclusive	80 000	0.5 tens. str.	1 725 000 / tens. str.	19	2 640 000 / tens. str.	30
Over 12 to 20 in., inclusive	80 000	0.5 tens. str.	1 650 000 / tens. str.	18	2 400 000 / tens. str.	28

(b) The classification by size of the forging shall be determined by the specified diameter or thickness which governs the size of the prolongation from which the test specimen is taken.

(c) The yield point shall be determined by the drop of the beam of the testing machine.

(d) Tests of forgings shall be made only after final treatment.

10. *Tension Test Specimens.*—(a) Tension test specimens shall be taken from a full-sized prolongation of any forging. For forgings with large ends or collars the prolongation may be of the same cross section as that of the forging back of the large end or collar. Specimens may be taken from the forging itself with a hollow drill, if approved by the purchaser.

(b) The axis of the specimen shall be located at any point midway between the center and the surface of the forging, and shall be parallel to the axis of the forging in the direction in which the metal is most drawn out.

(c) Test specimens shall be of the form and dimensions shown in Figure 1.

11. *Number of Tests.*—Unless otherwise specified by the purchaser, tests shall be made as follows:

(a) For unannealed forgings one tension test shall be made from each melt.

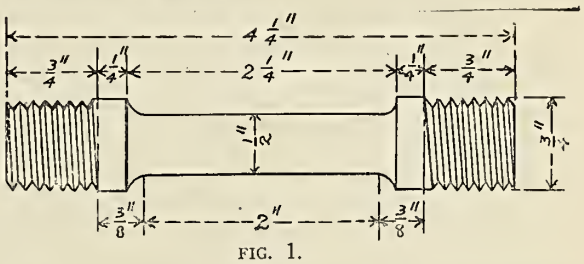

FIG. 1.

(b) For annealed forgings one tension test shall be made from each annealing charge. If more than one melt is represented in an annealing charge, one tension test shall be made from each melt.

(c) If more than one class of forgings by size is represented in any lot, one tension test from a forging of each class by size shall be made as specified in Sections 9 and 10.

(d) If any test specimen shows defective machining or develops flaws, it may be discarded and another substituted.

(e) If the percentage of elongation of any tension test specimen is less than that specified in Section 9 (a), and any part of the fracture is more than ¾ in. from the center of the gage length, as indicated by scribe scratches marked on the specimen before testing, a retest shall be allowed.

12. *Retests.*—(a) If the results of the physical tests of any test lot do not conform to the requirements specified, the manufacturer may reanneal such lot, but not more than three additional times unless authorized by the purchaser, and retests shall be made as specified in Section 11.

(b) When annealed forgings are specified, if the fracture of any tension test specimen shows over 15 per cent crystalline, a second test shall be made. If the fracture of the second specimen shows over 15 per cent crystalline, the forgings represented by such specimen shall be reannealed.

IV. WORKMANSHIP AND FINISH

13. *Workmanship.*—The forgings shall conform to the size and shapes specified by the purchaser. When

centered, 60 deg. centers with clearance drilled for points shall be used.

14. *Finish.*—The forgings shall be free from injurious defects and shall have a workmanlike finish.

V. MARKING

15. *Marking.*—Identification marks shall be legibly stamped on each forging and on each test specimen. The purchaser shall indicate the location of such identification marks.

VI. INSPECTION AND REJECTION

16. *Inspection.*—(a) The inspector representing the purchaser shall have free entry, at all times while work on the contract of the purchaser is being performed, to all parts of the manufacturer's works which concern the manufacture of the forgings ordered. The manufacturer shall afford the inspector, free of cost, all reasonable facilities to satisfy him that the forgings are being furnished in accordance with these specifications. Tests and inspection at the place of manufacture shall be made prior to shipment.

(b) The purchaser may make the tests to govern the acceptance or rejection of the forgings at his own laboratory or elsewhere. Such tests, however, shall be made at the expense of the purchaser.

(c) Tests and inspection shall be so conducted as not to interfere unnecessarily with the operation of the works.

17. *Rejection.*—(a) Unless otherwise specified, any rejection based on tests made in accordance with Section 16 (b) shall be reported within five working days from receipt of samples.

(b) Forgings which show injurious defects while being finished by the purchaser will be rejected and the manufacturer shall be notified.

18. *Rehearing.*—Samples tested in accordance with Section 16 (b) which represent rejected forgings, shall be preserved for two weeks from the date of test report. In case of dissatisfaction with the results of the tests, the manufacturer may make claim for a rehearing within that time.

19. *Freight Charges.*—All rejected material will be returned to the manufacturer, who shall pay freight charges both ways.

Forney Type Locomotive (0-4-4) and (0-6-4). Figs. 1, 10. A type of locomotive first suggested by M. N. Forney, having two or three pairs of coupled driving wheels and a four or six-wheel swiveling rear truck, but having no front truck. A small water tank and coal bunker are carried over the rear truck.

Foundation Brake Gear. Figs. 1554-1582. The levers, rods, brake beams, etc., by which the piston rod of the brake cylinder is connected to the brake shoes in such a manner that when air pressure forces the piston out the brake shoes are forced against the wheels. Recommended practice is that braking power should be 75 per cent of weight on drivers, engine in working order, for driver brakes; 60 per cent. of entire weight on them for truck and trailer wheel brakes; and 100 per cent of light weight of tender for tender brakes. Equalized pressure in brake cylinder, 60 pounds per square inch; maximum pressure in brake cylinder, 85 pounds per square inch; maximum stress in levers, 23,000 pounds per square inch; maximum stress in rods, except jaws, 15,000 pounds per square inch, no rod to be less than ⅞ inch in diameter; maximum stress in jaws, 10,000 pounds per square inch; maximum shear on pins, 10,000 pounds per square inch; diameter of pins to provide a bearing value not to exceed 23,000 pounds per square inch., The reduction of stresses in rods, levers and jaws due to friction of the foundation brake gear and the reduction of braking power due to the same cause and to the action of release springs should be neglected, because it is considered to be too difficult to determine their value even with a fair degree of accuracy. For tenders with four-wheel trucks and of various weights, the following table gives particulars as to braking:

Light Weight	Size of Brake Cylinder	Maximum Load at Middle of Brake Beam
Over 50,000 pounds	12-inch	22,000 pounds
Between 30,000 and 50,000 pounds	10-inch	15,000 pounds
Less than 30,000 pounds	8-inch	....

See LOCOMOTIVES, INSPECTION AND TESTING.

Foundation Ring. See MUD RING.

Fountain. See CAB TURRET.

Four-Guide Crosshead. See CROSSHEAD.

Four-way Cock (Air Brake). A plug or stop cock having two channels or passages in the moving portion, placed in the pipe between the main brake pipe and triple valve to give the brake either automatic action or straight air, or to cut out the brake on an engine or tender entirely. Used with old forms of triple valve and now almost obsolete.

Four-Wheel Engine Trucks. Figs. 996-1010.

Four-Wheel Switcher (0-4-0). Figs. 1, 3-7, 101, 145. A locomotive having two pairs of coupled driving wheels, but no front or trailing truck. Frequently built with either side or saddle tanks and operated without the usual tender. Used for switching cars in small yards, and also by contractors and industrial railways.

Frame (Locomotive). Figs. 501-573; 17, Figs. 976-987. A structure composed of two main side frames and several crossties upon which the boiler, cylinders and other attachments are carried. Through the medium of springs and equalizers the weight of the frame and its load is transmitted to the journal boxes, axles and wheels. The main frame is usually attached to the cylinder castings by either one or two bars, called front rails, which are made either in separate pieces or as a part of the main side frames. Where trailing trucks are used a rear frame extends back from the main frame and is either made in a separate bar or as a part of the side frames. In some designs the frame extends back and supports a small tender. See Rule 39, LOCOMOTIVES, INSPECTION AND TESTING.

(Of a Door, Ventilator, or Window Sash). The rectangular or curved border surrounding or enclosing it.

(Engine Trucks.) A rectangular structure built of wrought iron or steel, with legs or jaws for the journal boxes, welded, cast or bolted on. It supports the front end of the locomotive, and transmits its weight to the journal boxes through the bolster, springs and equalizing beams. The truck has four or two wheels, and in the latter case it is usually equalized with the forward pair of drivers. In certain designs of suburban tank locomotives, a six-wheel truck is used.

Frame Bolt. The bolt that is used for bolting two portions of a frame together.

Frame Bottom Rail. 78, Figs. 101-140; 12a, Figs. 504-508. The bottom member of a locomotive frame between the pedestal jaws. The frame top rail is continuous over the pedestals.

Frame Brace. 76, Figs. 101-140; Figs. 531, 532, 539, 540, 545. Any member inserted between the main side frames of a locomotive to stiffen them and keep them square. See Crosstie.

Frame Brace to Back Head. A diagonal iron rod secured to the back head of a boiler and to the back end of the frame and foot plate on each side of the locomotive. Now obsolete.

Frame Cross Plate. A plate or casting secured across the frames to strengthen them; usually just in front of the cylinder saddles.

Frame Crosstie. See Crosstie.

Frame Filling. 8, Figs. 504-508; Figs. 537, 543, 544, 559. A casting or plate bolted between the upper and lower bars of a frame for stiffening it and for the attachment of brake hangers, expansion pads, etc.

Frame Front Rail. 17, Figs. 101-140. The forward portion of a built-up frame, or that part between the forward driving pedestal and the front bumper.

Frame Pedestal. See Pedestal.

Frame Pedestal Thimble. See Pedestal Thimble.

Frame Pivot Connection. The hinge joint by which the forward unit or engine is connected to the rear unit. Used on articulated locomotives.

Frame Splice. 6, Figs. 504-508. The front part of a locomotive frame is sometimes called the front splice, as distinguished from the main frame, or that part that holds the driving boxes. The term is also used to designate the actual joint or connection between the two portions of a frame.

Frame Splice Keys. 7, Figs. 504-508. Keys driven into slots or key-ways to secure the main part of a frame to the front rail or forward portion and to the rear frame.

Frame Top Rail. 77, Figs. 101-140; 12, Figs. 504-508. The top member of a locomotive frame. See Frame Bottom Rail.

Frame Wedge Bolt. Fig. 931. A bolt passing through a pedestal thimble or pedestal cap to adjust the position of a driving box wedge.

Friction Draft Gear. Figs. 1857-1879. Any form of Draft Gear, which see, which makes use of friction for absorbing and dissipating the energy of buffing and tension shocks transmitted through the couplers.

Front Cylinder Head. Figs 596, 597, 600. The cylinder head on that end of the cylinder nearest the front or pilot end of the engine. See Cylinder Head and Back Cylinder Head.

Front End. Figs 374-376. A common name for the smokebox, which see, and its contained parts.

Front End Door. See Smokebox Door.

Front Frame. See Frame Front Rail.

Front Tube Sheet. See Tube Sheet.

Front Tube Sheet Brace. See Tube Sheet Brace.

Front Water Space. 26, Figs. 152-186. The space formed by the throat sheet, mud ring and inside throat sheet or back tube sheet. See Water Space.

Frost Valve. Fig. 1228. A small valve for draining or relieving the pressure in the injector delivery pipe.

Fulcrum. "In mechanics, that by which a lever is sustained, or the point about which it moves."—Webster. See Brake Lever Fulcrum.

Funnel. A conical receptacle with the broad part uppermost, secured to the boiler just below the gage cocks, to receive the drip from them. Called also gage cock-dripper.

The filling hole of the tender tank is sometimes called a funnel.

Fuse (Electric Locomotive). A short piece of metal, in the form of a wire, rod or strip, forming part of an electric circuit to protect a motor, lamp or other transformer of energy from an excessive current. For a given circuit, a fuse is used of such metal and conductivity that it will melt and thus open the circuit as soon as the limit of current carrying capacity of the circuit is reached. Fuses are generally placed in boxes, tubes, or other receptacles, to prevent the vaporized metal flying out on surrounding objects.

Fuse Box (Electric Locomotive). Fig. 2226. A fireproof receptacle, enclosing a fuse or fuses, with suitable contracts or clips for readily attaching them, and usually provided with a magnetic blow-out device. The fuse box is mounted on some part of the locomotive frame, generally near the third-rail shoe.

Fuse Terminals. The clips, clamps or binding posts used to hold a fuse in place in a circuit.

Fusible Plug. Fig. 192. A plug screwed into a brass thimble in a crown sheet, made of an alloy of lead, tin and bismuth, in such proportion as to give the alloy a melting point somewhat higher than the temperature of the water corresponding to the steam pressure carried. It is intended to prevent the destruction of a crown sheet by overheating when the water is low, as the melting of the plug will allow the steam to escape. In practice they are unreliable, because the melting point of the alloy often rises with long exposure to heat, and scale forming over the plug itself melts. The Interstate Commerce Commission requires the following:

Article 14. *Fusible Plugs.*—If boilers are equipped with fusible plugs they shall be removed and cleaned of scale at least once every month. Their removal must be noted on the report of inspection.

Fusible Plugs. At the Master Mechanics' convention of 1899 the following resolution was carried:

Resolved, That it is the sense of the American Railway Master Mechanics' Association that the use of fusible plugs in the crown sheets of locomotive fire boxes is not conducive to the prevention of the overheating of the crown sheet. (See page 153, 1899 report.)

G

Gage (of Track). The distance in the clear between the heads of the rails of a railroad; 4 ft. 8½ in. is the standard gage; if greater than this by more than ½ in., a broad gage; if smaller, a narrow gage.

A tool or instrument used as a standard of measurement of pressure or size. See Air Gage, Pressure Gage, Screw Gage, Steam Gage, Water Gage.

Gage Cock. Figs. 1181-1185. A faucet or cock screwed into the back head of a boiler for ascertaining the height of the water in it. Three are commonly used. See Boiler Inspection.

Gage Cock Dripper. A receptacle or funnel placed under the gage cocks to catch the water from them and conduct it into a waste pipe.

Gage Cock Hole. 223, Figs. 101-140. The hole into which a gage cock is screwed. Usually placed in the boiler back head and located with respect to the crown sheet and water level, according to local requirements.

Gage Lamp. Figs. 1719-1728. A lamp for illuminating the face of steam, air or water gages. See Rule 32, Locomotives, Inspection and Testing.

Gas-Electric Motor Car. Figs. 2231, 2232, 2235, 2236. See Motor Car.

Gasket. A thin sheet of rubber, cloth or sheet metal or asbestos or rubber enclosed in copper armor put in a joint between two pieces of metal to prevent leakage.

Gasolene Locomotive. Figs. 97-100. A locomotive propelled by a gasolene engine. Used for industrial and switching service.

Gasolene Motor Car. Figs. 2230, 2234. See Motor Car.

Gear. In mechanics the term is used to designate a combination of appliances for effecting some result, as Valve Gear, Brake Gear, Draw Gear.

Wheels are said to be in gear when they have cogs interlocking. See Gear Wheel.

Gear Ratio (Electric Locomotives). The relation between the number of teeth on a pinion to those on a gear wheel with which it meshes. Thus a gear wheel with 55 teeth, driven by a pinion having 11 teeth, would give a gear ratio of 5 to 1.1 Stated in another way, the motor armature would have to make 5 revolutions to 1 turn of the axle.

Gear Wheel. 7, Fig. 143. A wheel provided with a toothed periphery, for transmitting power from or to a shaft on which a similar wheel, of the same or different diameter, is secured. Electric locomotives have gear wheels fastened to the driving axle. A smaller gear wheel, called a pinion, is fastened to the armature shaft, and engages the gear wheel on the driving axle, thus transmitting the power of the electric motor to the driving wheels of the locomotive. Geared locomotives have gear wheels fastened to the axles, which mesh with bevel gear pinions on the line shaft driven by the engines.

Geared Locomotive. See Shay Geared Locomotive.

Geared Motor (Electric Locomotive). An electric motor which drives an axle of a car or locomotive through the medium of gear wheels or gears.

Gearless Motor (Electric Locomotive). See Electric Locomotive. A motor having its armature fastened on a driving axle, thus propelling the locomotive directly, without the interposition of gears. The locomotives shown in Figs. 2145-2147 are gearless.

Generator. See Dynamo.

Gib (for Journal Bearings). See Journal Bearing Wedge.

Gib and Key. A fastening to connect a bar and strap together by a slot common to both, in which an I-shaped gib with a beveled back is first inserted and then driven fast by a taper key.

Globe Valve. Figs. 1222, 1223, 1224, 1230, 1232. A valve the body of which is spherical or globular in shape, usually having a disk with a conical edge seating in a ring similarly ground to fit the disk. The spindle or stem that raises and lowers the disk has a thread on it working in a nut; and at the end is fitted with a handle, usually disk shaped. A number of globe valves are used on a locomotive. See Angle Globe Valve.

Gooch Valve Motion. Fig. 750. A valve motion employing two eccentrics, link, link block and rocker, very similar to the Stephenson motion, but differing from it in having the link stationary and the link block movable. Not in general use. See Valve Gear.

Goose Neck. 15, Fig. 1818. A curved pipe, usually made of cast iron, conveying water from the valve in a tender to the suction hose that connects it to the injector feed pipe. British, swan neck.

Governor. See Pump Governor.

Governor Pipe Insulating Joint (Air Brake). A special pipe fitting made of brass and hard rubber, placed in the air pipe leading to the electric governor, to prevent any grounded current in the latter from passing into the piping system.

Governor Piston (Compressor Governor). 6, Figs. 1422-1424. One of the two pistons in a compressor governor. The upper piston is so placed that the Regulating Spring, which see, presses down on it, while main reservoir air pressure acts to force it up. The lower piston is the one which carries the spindle and disk of the steam valve to the compressor.

Governor Synchronizing System (Air Brake). Fig. 1411. An arrangement for insuring an equal division of work of furnishing compressed air for braking and other purposes among all the motor-driven air compressors in a train. The current supply to the motor of the motor-driven air compressor is controlled by a compressor switch operated by air pressure, as in the ordinary form of compressor governors, except that the cutting-in and cutting-out of this switch is controlled by the operation of a magnet valve. In addition, a "master governor" is used on each motor car or locomotive, similar in all respects to a compressor governor, except that instead of controlling the current supplied to the motors of the motor-driven air compressors, it acts simply as a pilot or master switch to control the current to the magnets which operate the compressor switches. The magnets of the compressor switches are connected in parallel between the trolley (or positive battery terminal) and the synchronizing wire, which runs the entire length of the train. The cutting-in of any master governor connects the synchronizing wire to ground (or negative battery terminal) and thereby operates all the compressor switch magnets. With all the compressors cut out and the pressures in the main reservoir line equalized, as soon as this pressure is decreased to a point at which any one of the master governor controlling mechanism operates, the closing of this master governor switch supplies current to the magnets of each compressor switch in the train, causing them to operate so as to cut in these switches and start all the compressors simultaneously. Whether one or more of the master governors is cut in at the same time is immaterial, since the compressor will continue to operate and raise the pressure in the main reservoirs on each vehicle and in the main reservoir line throughout the train, until the controlling portion of the last master governor remaining cut in operates to open the circuit to the compressor switch magnets, which causes all the compressor switches to cut out and stop the operation of all the compressors simultaneously. In this manner, all the compressors operate the same length of time, thus avoiding a condition in which some compressors are overworked while others are not working up to their full capacity.

Governor Union (Compressor Governor). A brass union

fitting connecting the compressor governor to the pipe leading to the engineer's brake valve.

Grab Irons. 225 and 159, Figs. 101-140; 27, Figs. 1762-1766. Also termed corner handles and hand holds. The handles attached to tenders for the use of trainmen in boarding them. They are often more definitely specified as side or end grab iron. The term handle, though often used to designate these attachments, is not strictly appropriate to such a part, nor is it so widely in use as grab iron. The bars extending the length of the boiler and attached to the front of the smokebox are called HAND RAILS.

Grade Resistance. When a train is hauled up a grade, the resistance due to friction is increased by that due to lifting the train against gravity. The amount of this increased resistance is determined as follows: One mile equals 5,280 feet, and if the grade be one foot per mile the pull necessary to lift a ton of 2,000 pounds will be $\frac{2000}{5280} = .3788$ pounds.

If the grade is expressed in feet per hundred or per cent., the resistance will be $\frac{2000}{100} = 20$ pounds for each per cent. of grade. Therefore, the grade resistance in pounds per ton = 20 × per cent. grade.

To the grade resistance must be added the train resistance due to speed and friction for level running; *i. e.,* total train resistance on grade equals grade resistance plus train resistance for level running. See WEIGHT OF TRAIN THAT CAN BE STARTED ON A GIVEN GRADE.

Graduated Spring. A form of compound spring in which only a certain number of the individual spirals come into action with a light load and the others only under a heavy load. Another method of accomplishing the same end, graduating the resistance of the spring to the load placed upon it, is the use of the keg-shaped or spool-shaped spring. Under a load the part of larger diameter closes first and that of smaller diameter is much stiffer. Graduated springs have been superseded by single and double nest coil springs of equal length.

Graduating Spring (Triple Valve). 22, Fig. 1441. A spiral spring which acts against a collar on the graduating stem to restrain the triple valve piston from moving beyond service position when a gradual brake pipe reduction is made, but which is compressed by the piston when a sudden brake pipe reduction is made. See AIR BRAKE and TRAIN AIR SIGNAL INSTRUCTION.

Graduating Stem (Triple Valve). 21, Fig. 1441. See GRADUATING SPRING.

Graduating Stem Nut (Triple Valve). 20, Fig. 1441.

Graduating Valve (Old Type Triple Valves). 7, Fig. 1441. A small plug valve is fastened to the piston stem so that its movement is controlled by the piston. Its office is to open and close ports in the slide valve so as to control the flow of air from the auxiliary reservoir to the brake cylinder in the service application of the brakes.

(New Type Triple Valve.) A small slide valve fastened to the piston stem and sliding on the top of the main slide valve. It opens and closes ports in the slide valve which controls the flow of air from the auxiliary reservoir to the brake cylinder in service applications; from the brake cylinder to the atmosphere in release, and also controls the "quick service" and "quick recharge" features.

(Engineer's Brake Valve.) In the running position the air from the main reservoir has access to the brake pipe only through the feed valve attachment, which operates to limit the pressure in the brake pipe to 70 pounds when it is 90 pounds in the main reservoir. In the position for service application of the brakes the air pressure is partially released from the chamber above a piston, which is then forced upward by the brake pipe pressure below it, and opens a valve to the atmosphere, through which the brake pipe air is discharged at such a rate that the emergency action of the triple valves on the cars cannot take place. Any degree of reduction of brake pipe pressure may be effected in this way for graduated applications of the brakes. In the position for the emergency application of the brakes, a large direct port from the brake pipe to the atmosphere is opened, which causes the instantaneous application of the brakes throughout the train.

Graphite Lubricator. Figs. 1303, 1304, 1316. A device by which graphite can be fed to the valves of a locomotive for the purpose of lubrication.

Grate. Figs. 434-459. A set of parallel bars, commonly cast iron, at the bottom of a firebox to hold the fuel. It is usually made of a number of sections, each section comprising three or four bars resting at their ends on frames or bearers, and connected by short levers to a rod that can be moved back and forth to rock the bars and shake ashes out of the fire. For anthracite coal the grate consists of WATER TUBES and PULL BARS, which see. See CORNER GRATE, DEAD GRATE, DROP GRATE, DUMP GRATE, FINGER GRATE. ROCKING GRATE, SHAKING GRATE.

Grate Area. The product obtained by multiplying the length by the width of a locomotive grate. Usually expressed in square feet.

Grate Bar. Figs. 434, 435, 438. A cast iron bar, usually rectangular in section and thinner at the bottom, a number of which go to make up a grate. British, fire bar.

Grate Bar Thimble. 63, Figs 152-186. A cylindrical cap or ferrule on the end of a grate bar where it rests on the side frame or bearer.

A piece of tube placed above the mud ring in the boiler back head and firebox door sheet, and in the back tube sheet and throat sheet, through which the shaking grate rod pull bar passes. Usually used in connection with a water tube grate on hard coal burning locomotives.

Grate Bearer. See GRATE SIDE FRAME.

Grate Center Frame. Figs. 447, 448. A casting placed lengthwise of the firebox and half way between the sides to support the grates. It has bearings on each side for the grate bars. Also called great center bearer and grate center support.

Grate Connecting Pins. Pins or pivots for attaching shaking grate bars to the grate connecting rod.

Grate Connecting Rod. 9, Figs. 443-465. A rod connecting the bars of a rocking or shaking grate, with a handle or lever for shaking or rocking them.

A rod for tipping a dump grate.

Grate Crank. 16, Figs. 443-465. A crank attached to a locomotive dump grate and operated by the grate lever. Also called drop grate arm.

Grate Crank Bracket. An attachment to the frame or the side of the firebox for holding the grate crank.

Grate End Frame. A casting at either end of a firebox to hold the end portions of a grate.

Grate Frame. The rectangular ring inside a firebox and fastened to the side sheets, in which the grate bars are carried.

Grate Frame Bearer. Fig. 454. A bracket riveted or bolted to the bottom of the firebox sheets for holding the frame in which the grate bars are carried. Also called grate bearer support.

Grate Frame Studs. Stud bolts for securing the grate frame to the sides and ends of a firebox.

Grate Frame Support. 12, Figs. 443-465. A transverse casting, of which two are commonly used, to support the frame holding the grate bars.

Grate Lever. 10, Figs. 443-465. A bar pivoted to a bracket and connected to a rod that operates the shaking grates. The upper end of the lever projects slightly above the cab deck and is generally moved by a bar having in its end a socket that fits over the upper end of the grate lever. For dump grates the lever is connected to the grate crank.

Grate Lever Catch. A fastener to restrain the lever that operates the dump grate.

Grate Lever Fulcrum. 11, Figs. 443-465. The bracket on which the grate lever is pivoted.

Grate Lever Hanger. A bracket or suspender on which the grate lever of a rocking grate is pivoted.

Grate Lever Pin. A pin or pivot by which the grate lever of a rocking grate is supported and on which it turns.

Grate Rocker Key. A key inserted in the arm moving the rocking grates to secure the arm to the rod by which it is moved.

Grate Rocker Trunnion. The pivot cast on either end of a rocking grate bar.

Grate Shaft. 285, Figs. 101-140. The shaft or trunnion usually cast in one piece with the grate, and which turns with it on the supports or bearings.

The short bar to which a rocking grate lever is secured.

Grate Shaft Arm. A lever fastened to the shaft that operates a dump grate.

A lever fastened to a section of a rocking grate, and connected to the grate lever by a rod or pins.

Grate Shaft Bearing. A rest for either end of a dump grate shaft. Usually bolted to the under side of the grate frame. Also called grate shaft bracket.

Grate Shaft Bracket. A hanger affording a bearing for the shaft of any section of a rocking grate.

Grate Shaft Collar. A flange or enlargement formed on a rocking grate shaft to keep it in position between the bearings.

Grate Shaft Locking Pin. A key to make fast a grate shaft and prevent its moving.

Grate Shaker. Figs. 440, 442. The apparatus for rocking the grate bars and operated either by air or steam.

Grate Side Frame. Fig. 455. A cast-iron bar on the sides of a firebox with bearings or recesses to hold the trunnions of the grate bars. Also called a grate bearer.

Grate Water Tube. 66, Figs. 152-186. A tube placed longitudinally in the bottom of the firebox and communicating with the front and back water spaces. It forms one of the grate bars of a water grate used on hard coal burning locomotives.

Grease Box. A Journal Box, which see, in which grease is used as a lubricant instead of oil.

Grease Bucket. A metal pail or bucket for holding grease for lubrication.

Grease Cup. Fig. 1320. A receptacle for grease and fitted with a feed control device, for lubricating various parts of a locomotive. Usually used on the side and main rod crank pins.

Grid. Fig. 2220. See Control System.

Grid Resistance Ventilator. 4, Fig. 2127. A ventilator in the cab roof for admitting air to the resistor case. Also called resistor case ventilator. Used on electric locomotives.

Guide. 149, Figs. 101-140; Figs. 859, 861, 865, 867, 868, 870. One of two or four bars placed parallel to the axis of a cylinder and piston rod and forming ways or slides in which the crosshead moves. Single bar guides are occasionally used. Called also a slide. British, slide bar. See Rule 26, Locomotives, Inspection and Testing.

Guide Bar. One of the bars of a Guide.

Guide Bearer. See Guide Yoke.

Guide Block. 1, Figs. 579-605, 648-761; 4. Fig. 861; Fig. 708. A block or blocks bolted to the back cylinder head or to the guide yoke to form a bracket or support for a guide or guide bar. The front guide blocks are commonly cast on the cylinder head. British slide bar carrier.

Guide Block Bolt. 5, Fig. 861. A bolt to fasten a guide block to a cylinder head or guide yoke.

Guide Oil Cup. Figs. 1326, 1331. A cup or cups placed on the upper guide bar or bars to hold a supply of oil for lubricating the guide.

Guide Step. 41, Figs. 697-701. A small step fastened to a guide yoke for convenience in reaching parts of the valve gear, etc., that are located between the frames.

Guide Yoke. 3, Fig. 861; 39, Figs. 101-140; 19, Figs. 697-701; Figs. 858-860, 861, 864, 869. A transverse plate or casting secured to the frames by angles or knees, holding and supporting the outer ends of the guides and frequently having a brace to the waist of the boiler on each end, as well as an expansion plate for the boiler between the frames. Called also spectacle plate, motion plate, guide bearer and guide crosstie.

Guide Yoke Brace Angle. An angle for the attachment of a brace to the waist of the boiler and having its lower end secured to the guide yoke.

Guide Yoke Bracket. An extension on the ends of a guide yoke for holding the guides on certain types of locomotives with driving wheels spaced close together.

Guide Yoke Collar Bolt. A bolt used to secure a guide bar to a guide yoke or guide yoke collar, where the yoke is of such form that it surrounds the main rod.

Guide Yoke Knee. Fig. 863; 40, Figs. 101-140; 20, Figs. 697-701. An angle casting bolted to the frame and to the guide yoke to secure them.

An expansion knee to support the boiler, and secured to the guide yoke.

Guide Yoke Sheet. A plate secured to the guide yoke and to an angle on the under side of the shell of the boiler to provide a support that will allow the boiler to expand and contract. A waist sheet.

Guide Yoke Sheet Wearing Plate. A strip interposed

between the shell of the boiler and the flange of the guide yoke sheet to take the wear of the sliding parts.

Gun Iron or **Gun Metal.** An alloy used for bearings, composed of copper, zinc or tin, and iron. Gun metal as commonly made consists of 90 per cent. copper with 10 per cent. tin; but zinc and iron are frequently substituted for tin, in the proportions—copper 78, zinc 20, iron 2.

Gusset Course (of a Boiler). See CONICAL CONNECTION or COURSE.

Gusset Plate. Fig. 1769. A flat plate used to hold two parts of a metal underframe together by riveting through each member and the plate or to stiffen a joint between two pieces which are riveted together by angle plates, in which case the gusset plate is riveted to the flangs of the adjoining pieces.

Gusset Stay. 81, Figs. 152-186. A boiler brace made of steel plate cut to a form suitable for bracing and supporting two sheets of the boiler. Usually used to secure the back head to the roof sheet, or the front tube sheet to the first course. See BACK HEAD BRACE.

H

Half Elliptic Spring. See SPRING and ELLIPTIC SPRING.

Hand Brake. See SAFETY APPLIANCE STANDARDS.

Hand Holds. See GRAB IRON and SAFETY APPLIANCE STANDARDS.

Hand Hole. An opening in a water leg or in the shell of a boiler for cleaning out mud and scale. It is closed by a cast or wrought iron plate or cover held in place by studs set in a heavy ring riveted around the hole. Usually called wash-out hole. British, mud door.

Hand Hole Plate. 60a, Fig. 245. See HAND HOLE.

Hand Hole Plate Bolt. 60b, Fig. 245. One of a number of bolts passing through holes in the hand hole plate cover to secure it to the ring riveted to the boiler.

Hand Hole Plate Clamp. See HAND HOLE PLATE DOG.

Hand Hole Plate Dog. 60d, Fig. 245. A curved piece with its ends or feet resting against the sheet of a boiler near the edge of a hand hole. A bolt attached to the dog passes through a hole in the center of the hand hole plate, and a nut screwed on the end of the bolt draws the plate tight against the boiler.

Hand Wheel. A wheel fastened to a brake shaft on the tender to apply the brakes by hand.

A small disk on the stem of a steam or water valve to open and close it.

Handle. "That part of anything by which it is held in the hand. A haft. As the handle of a knife or other instrument."—Worcester. They are designated by the name of the part or thing to which they are a handle, as smokebox door handle, etc.

Handle Bolt (Engineer's Brake Valve). More properly called HANDLE LATCH.

Handle Latch (Engineer's Brake Valve). 11, Fig. 1432. An attachment to the engineer's brake valve handle which indicates to the engineer when the rotary valve is in the various positions for operating the brakes, by passing over notches in the brake valve body.

Handle Latch Spring (Engineer's Brake Valve). 10, Fig. 1432. A spiral spring used with the handle latch to force it into notches in the valve body, thereby indicating when the handle is in each position required in operating the brakes.

Handrail. 6, Figs. 101-140; 27, Figs. 361-407. A piece of iron pipe secured to the boiler above the running board and on the bumper or in the cab, to serve as a hand hold. See SAFETY APPLIANCE STANDARD.

Handrail Bracket. 52, Figs. 101-140. A post or support secured to the boiler and holding a handrail.

Handrail Flange. A flange fastened on the head of a handrail at the front of the cab.

Hanger. That by which a thing is suspended. A means for supporting shafting or machinery.

Hasp. A clasp, especially one that passes over a staple and is fastened by a pin or bolt. A metal hook for fastening a door or window.—Century Dictionary.

Hauling Capacity. The hauling capacity of a locomotive is determined by the relation between the tractive effort developed and the resistance of the train, and both of these factors are dependent on the speed.

Head. See BRAKE HEAD, CYLINDER HEAD.

Headlight. 1, Figs. 101-140; Figs. 1675-1707. A lamp, with a reflector at the back, placed at the front of a locomotive to illuminate the track ahead. Oil lamps are largely used, but many headlights are fitted with an electric arc or incandescent light, the current for which is supplied by a small steam turbine and dynamo unit, placed on the boiler and taking steam therefrom. Acetylene and steam-acetylene headlights are also now in use.

Headlight Bracket. 3, Figs. 101-140; Fig. 381. A support secured to the side or front of the smokebox to hold a headlight.

Headlight Bracket Column. Short posts or columns supporting a headlight on a shelf.

Headlight Bracket Stand. A support for a headlight, consisting of brackets, short posts and a shelf.

Headlight Burner. Figs. 1673, 1674, 1681. That part of an oil burning headlight comprising the wick and mechanism for turning it up or down.

Headlight Handrail. See SAFETY APPLIANCE STANDARDS.

Headlight Step. 139, Figs. 101-140. A small step fastened to the side or front of a smokebox to enable a man to reach the headlight when lighting or trimming it. See SAFETY APPLIANCE STANDARDS.

Headstock (British). American equivalent, end sill. The transverse end member of the UNDERFRAME, which see. It is pierced transversely in the center for the draw gear, and the buffing gear is carried near the ends.

Heater Cock. A valve attached to the boiler head, to admit steam from the boiler to the pipe running under the tender and train for heating the cars. It is a REDUCING VALVE, which see, and allows sufficient steam to pass to maintain a pressure of from 20 to 80 pounds per square inch in the train steam pipe at the valve.

Heater Cock Extension. The pipe leading from the cab turret on the boiler to the heater cock.

Heater Tank. Fig. 2132. A small tank carried on an electric locomotive for holding a supply of water for the electric steam generator.

Heating Surface. That part of a locomotive boiler exposed to heat action on one side and available for the evaporation of water on the other, and expressed in square feet. Usually divided into firebox heating surface and tube heating surface, which see. The Baldwin Locomotive Works give the following average values of the quotient obtained by dividing the rated tractive effort in pounds by the total heating surface in square feet; Atlantic (4-4-2) type, 8; Pacific (4-6-2) type, 9; American (4-4-0) type, 10; Mi-

kado (2-8-2) type, 10; Ten-Wheel (4-6-0) type, 11; Consolidation (2-8-0) type, 14. See FIREBOX HEATING SURFACE and TUBE HEATING SURFACE.

Heating. See STEAM HEAT APPARATUS.

Helper. A term used to designate a helper engine for trains.

High Pressure Control (Air Brakes). See DOUBLE PRESSURE CONTROL.

High Pressure Exhaust Valve. See EMERGENCY VALVE.

High Speed Brake (Air Brakes). Fig. 1403. A brake equipment consisting of the ordinary quick action brake with the addition of a few attachments, the principal one being an automatic pressure reducing valve which is attached directly to the brake cylinder. The auxiliary reservoir pressure is increased from 70 to 110 pounds, and in emergency applications a pressure of about 85 pounds is obtained in the brake cylinder. This high pressure is slowly bled off through the reducing valve to 60 pounds. The operations of release and recharging take place as in the ordinary quick action brake. For vehicles operating in a high speed braked train and not equipped with the high speed reducing valve, a safety valve is required.

Hinge. "A hook or joint on which a door, gate, etc., turns."—Webster. They are provided with a tube-like knuckle through which the HINGE PIN, which see, passes. The common door hinge is usually a butt or butt hinge. The strap hinge is a common form of rough hinge for heavy doors, cab aprons, tank manhole covers, etc. A T-hinge is a combination of the butt and strap hinge, one-half being of each form.

Hinge Pin. The pin passing through the knuckle of a hinge and holding the two parts together.

Hip Joint. The joint between the roof sheet over the firebox and the shell of a boiler with a Belpaire firebox.

Hip Joint Casing. Fig. 253. A sheet steel cover flanged and pressed to the shape of the hip joint and forming part of the jacket of a boiler with a Belpaire firebox. See JACKET.

Hoe. A fire tool or implement consisting of a short broad blade with a long handle at right angles to it, used for raking a fire or pulling ashes out of an ash pan.

Holder. "Something by which a thing is held."—Webster. A great variety of parts which serve this purpose are so called, as door holder, lamp holder, etc.

Hollow Staybolt. Fig. 225. A staybolt with a small hole lengthwise through the center.

Hood. A roof apron which is attached to the back end of a cab and extends out over the cab apron to protect the firemen. See FIRE DOOR HOOD.

Hook. A fire tool consisting of a long handle with a hook at one end used for raking or spreading fires.

Hopper (Extended Smokebox). A receptacle for cinders or sparks on the under side of a smokebox. It is shaped like the frustum of a cone or a pyramid, and empties into the CINDER PIPE, which see. Also called cinder pocket and spark pocket.

Hornblock (British). See PEDESTAL.

Hose. A piece of tubing made of India rubber and canvas for conveying water, air or steam. See AIR BRAKE HOSE.

Hose and Coupling (Air Brake). Figs. 1472, 1523. Flexible tubing with a hose nipple on one end and a hose coupling on the other for use in making the connection between adjacent cars of the brake pipe and train air signal pipe lines running throughout the train.

Hose Clamp (Air Brake). Figs. 1471, 1604. A clamp to bind the hose to the hose nipple and coupling.

Hose Collar. A collar which surrounds the hose and binds it on the nipple. Also called hose band.

Hose Coupling (Air Brake). Figs. 1474, 1526. A contrivance for coupling or connecting the ends of a pair of brake hose together, so that the air by which the brakes are operated can pass from one vehicle in a train to another. The couplings for train air signal apparatus are similar to brake hose couplings, but are arranged so that they will not couple to them.

Hose Nipple (Air Brake). Figs. 1473, 1603, 1606. A short iron tube fitting into the end of the brake hose and fastened by a suitable clamp and screws. One end is threaded and screws into the angle cock.

Hub (Wheels). 3, Figs. 897-907. The central portion, into which the axle is fitted. It is usually cylindrical in form and projects beyond the disks or spokes of the wheel on each side. In Great Britain termed the boss.

Hub Liner. See DRIVING BOX HUB LINER and JOURNAL BOX HUB LINER.

Hub Plate. See DRIVING BOX ADJUSTABLE HUB PLATE.

I

I-Beam. A general term applied by makers to any form of rolled iron or steel having an I cross-section. The top and bottom parts are termed the flanges, and the middle the web. When one of the flanges is simply a round bar it is termed a deck beam. I-beams are used for center and intermediate sills, also for body and truck bolsters on tenders.

Independent Brake Valve (Air Brake). Fig. 1431. A rotary, straight-air brake valve used with the Westinghouse ET locomotive brake equipment for operating the locomotive brakes independently of the train brakes. See ENGINEER'S BRAKE VALVE.

India Rubber. A gum which exudes from a tropical tree growing in the East and West Indies, Mexico, South America, etc. It is prepared for use by vulcanizing with a greater or less proportion of sulphur, according to the stiffness required.

Indicator. Figs. 662, 663, 665, 660. A device attached to the cylinder of a steam engine, which gives a graphical diagram of the steam distribution in the cylinder at all points in the stroke. Used chiefly for testing purposes.

Indicator Apparatus. See LOCOMOTIVE TESTS.

Indicator Fitting. A brass fitting with a three-way cock and pipe connections for an indicator from each end of the locomotive cylinder.

Indicator Plug. Fig. 664. A plug screwed into a hole in the side of a cylinder near the end. When the indicator is to be used this plug is removed and the indicator pipe connection screwed in. A hole is drilled near each end of a cylinder so that an indicator diagram may be taken from either end at will.

Injector. 186, Figs. 101-140; Figs. 1340-1367. A device for forcing water into a steam boiler in which a jet of steam imparts its velocity to the water and thus forces it into the boiler against the boiler pressure. See INSPIRATOR, BOILER INSPECTION.

Injector Bracket. A projection secured to the boiler for the attachment of an injector.

Injector Check Valve. See Boiler Check Valve.

Injector Connecting Rods. On injectors located outside the cab, rods secured to the steam and water valves and passing through the front of the cab so that the injector may be operated from inside.

Injector Delivery Pipe. 50, Figs. 101-140. A copper or iron tube through which feed water is forced into a boiler. Also called an injector check pipe.

Injector Delivery Pipe Hanger. 51, Figs. 101-140; 72, Figs. 152-186; Fig. 248. A hanger fastened inside a boiler to support the delivery pipe of an injector. Used when the injectors are on the boiler back-head and deliver water through a pipe terminating near the front end.

Injector Feed Pipe. 185, Figs. 101-140. A tube secured to the water inlet of an injector and connected to the hose from the tender.

Injector Feed Pipe Coupling. Fig. 1835. A coupling or union on the injector feed pipe to connect it to the hose from the tender tank.

Injector Hole. An aperture either in the first course of a boiler near the smokebox, or in the back head, for the injector delivery pipe to enter the boiler.

Injector Overflow Pipe. 187, Figs. 101-140. A pipe which receives the overflow from the injector and delivers it underneath the engine.

Injector Steampipe. 248, Figs. 101-140. A pipe which conducts steam from the turret to the injector.

Injector Steam Valve. Fig. 1235. A valve in the turret or injector steam pipe for the purpose of supplying steam for the use of the injector.

Inlet Valve (Air Compressor). The disc or poppet valve through which air enters the compressor.

Inside Admission Valve. A valve which takes live steam through a central cavity and admits it to the steam ports leading to the ends of the cylinder. The exhaust ports are at the ends of the valve. See Valve.

Inside Connected Locomotive. A locomotive having the main rods connected to cranks formed or built on the driving axle between the frames. Some four-cylinder compounds have two cylinders inside connected.

Inside Lap (Valve). With an outside admission valve, such as an ordinary slide valve, the inside lap is the amount by which the inside edge of the valve overlaps or goes beyond the inner edge of either steam port when the valve is at the exact center of its travel on the valve face. The effect of inside lap is to delay the release of the steam from the cylinder to the exhaust pipe. Sometimes called exhaust lap. See Outside Lap.

Inside Stack (Smokeboxes). 5, Figs. 361-407; 19, Figs. 411-420. An extension of the smokestack projecting downward inside the smokebox to a point above the exhaust pipe nozzle.

Inside Throat Sheet. See Firebox Throat Sheet.

Inside Welt. 50, Figs. 152-186. A strip or narrow plate riveted on the inside of the abutting edges of two plates of a boiler to form a butt joint. See Welt.

Inspection Card Holder. Fig. 1239. A frame provided with a glass lever for holding an inspection card in the cab.

Inspection Locomotive. Fig. 51. A locomotive having a large cab built over the front of the boiler for the use of officers in inspecting railroad track.

Inspirator. A device similar to an injector and accomplishing the same end. See Injector.

Insulating Joint. See Governor Pipe Insulating Joint.

Intercepting Valve. 2, Figs. 609-612; Figs. 609-611. A device used on compound locomotives and located in the saddle of the left high pressure cylinder between the receiver and the exhaust passages from the high pressure cylinders, and practically automatic in its operation. It consists of a reducing valve, intercepting valve proper and an emergency or high pressure exhaust valve. The reducing valve controls the admission of live steam from the boiler to the receiver pipe and reduces its pressure so that the low pressure cylinders will do the same amount of work as the high pressure cylinders. The intercepting valve opens or closes the receiver pipe to the exhaust from the high pressure cylinders and the emergency valve permits or prevents this exhaust from escaping through the main exhaust to the atmosphere.

In starting a train the locomotive uses live steam from the boiler in all the cylinders. When the pressure in the receiver rises above the amount to which the reducing valve is set, the valve automatically closes and cuts off the live steam from the receiver. It remains closed until the pressure in the receiver again drops. The reducing valve is closed by the intercepting valve, which is operated by the exhaust steam from the high pressure cylinders after the driving wheels have made a few revolutions. The locomotive is thus changed to compound automatically. If it is desired to prevent the locomotive from working compound the engineman opens the emergency exhaust valve which allows the exhaust from the high pressure cylinders to escape to the stack instead of going through the intercepting valve to the receiver. This causes the intercepting valve to close, which in turn opens the reducing valve and admits live steam directly to the receiver pipe.

Intercepting Valve Chamber. 44, Figs. 579-605. The cavity in the cylinder saddle in which the intercepting valve is placed.

Intercepting Valve Chamber Head. 4, Figs. 609-612. The cover for closing the opening of the intercepting valve chamber in the cylinder saddle and containing the dash pot.

Intercepting Valve Stem. 8, Figs. 609-612. The stem to which the intercepting valve is attached and on which the reducing valve slides. The dash pot piston is attached to the opposite end.

Intercepting Valve Stem Packing. 9, Figs. 609-612. Metal rings around the valve stem to make a steam tight joint for the reducing valve.

Intermediate Check Valve. See Line Check Valve.

Intermediate Sill. One of the longitudinal members of the underframe of a tender placed between the center sills and the side sill. See Sill.

Intermediate Transom and Pole Piece. 93, Figs. 2145-2147. A casting forming the intermediate transom of the frames and, at the same time, acting as a pole piece of the motors of an electric locomotive.

Internal Cylindrical Gage. A very accurately made, solid steel cylinder, used as a standard of measurement of cylindrical holes.

Internal Screw Gage. A solid steel cylinder with a screw

thread on it, for testing the diameter of female screws.

Interstate Commerce Commission. See Boiler Inspection and Safety Appliance Standards.

Inverted Arch Bar (Truck Side Frames). 2, Figs. 1913-1920. A wrought iron or steel bar which rests on top of the journal boxes with the Arch Bar, which see, on top of it. Also sometimes called the middle or lower arch bar.

Iron. An element and a metal, the most abundant and important of all those used in metallic form. When manufactured in large quantities it is never free from impurities, which are of great importance in reference to the character of the metal produced. See Pig Iron.

Iron Axle. See Axle Specifications.

J

Jack or Jack Screw. Figs. 2320, 2326, 2328-2333. A machine or device for raising heavy bodies, such as a locomotive or tender, to enable repairs to be made, etc. Such jacks are operated either by a screw turned by a lever or by an hydraulic ram or plunger. The latter has a plunger or ram under which oil or other non-freezing liquid is forced by means of a pump operated by a long handle.

Jack Shaft (Electric Locomotive). A shaft turning in bearings secured to the frames and provided with a crank at each end. The crank is connected by the motor rod to the motor crank and by the main rod to the main crank pin. Its function is to transfer the motion of the motor armature to the driving wheels and provide a flexible connection so that the driving wheels and spring supported weights can move independently of each other.

Jack Shaft Bearing. Fig. 2141. A bearing for the jack shaft and placed in the jack shaft crosstie.

Jack Shaft Counter Weight. 14, Fig. 2127. A counterweight on the jack shaft cranks to counterbalance the weights of the motor and main rods.

Jack Shaft Crosstie. 16, Fig. 2127. A casting forming a frame crosstie and also containing bearings for the jack shaft.

Jack Shaft Pedestal. The vertical legs of the frame between which the jack shaft bearing is placed.

Jack Shaft Pedestal Binder. 31, Fig. 2127. A bar fitted across the bottom of the pedestal and bolted to the lower frame rail, performing the same function as a pedestal bender. Also called a pedestal cap.

Jacket. 56, Figs. 101-140. A covering of thin sheet iron over the lagging of a locomotive boiler, cylinder or other protected radiating surface. Sometimes of Russia iron, polished, but more commonly of sheet steel painted. British, clothing plate.

Jacket Bands. Strips surrounding the jacket to cover the joint between any two sections.

Jacket Clamps. Fasteners for holding the edges of the jacket in place.

Jacket Edging. A turned up molding on the joint of the jacket sheets.

Jacobs-Shupert Firebox. Figs. 193-196. A firebox in which the usual arrangement of flat sheets supported by staybolts has been abandoned except in the front sheets and door sheet. Side sheets and crown sheet have been replaced by sets of channel-shaped sections rivetted together with their flanges away from the fire. Stay bolts have been replaced by stay sheets, one at each joint of the channels, which are interposed between the sections and secured by the same rivets that hold adjacent flanges. These sheets are partially cut away in the water leg to permit horizontal circulation of water around the firebox and the edges of the sheets from caulking strips for making tight joints between adjacent channel sections. All seams are submerged and no joints are exposed to the fire or hot gases. Due to the irregular outline thus formed for the firebox crown and sides, the available heating surface of the hottest section of the boiler is enlarged without increasing the size of the grate area.

Jaw. See Pedestal Jaw.

Journal. 2, Figs. 908-909 and 1044-1048. That part of an axle or shaft on which the journal bearing or brass rests. The part of a crank axle on which the driving box brass rests is called the main journal to distinguish it from the crank pin journal.

Journal Bearing. 3, Figs. 1037-1043. A block of metal, usually some kind of Brass or Bronze, which see, in contact with a journal, on which the load rests. In locomotive building the term when unqualified means an engine or truck axle journal bearing. A standard form has been adopted by the American Railway Master Mechanics' Association, but its composition is not specified. See Figs. 2243-2265, which have been changed to agree with M. C. B. standards of 1912. The Hopkins or lead-lined journal bearing is one coated on the inside with a thin sheet of lead to make it self-fitting on the journal. Babbitt metal in some of its many forms is used for car journal bearings occasionally and almost universally for the bearings of machinery. In order that the journal bearing may be more easily removable, and to distribute the load more equally, a journal bearing key, also called a wedge, is used to hold the journal bearing in place.

Journal Bearing. See above and Driving Box Brass.

Journal Bearing Wedge. Fig. 2008. A metal block inserted over the top of a journal bearing. It distributes the load uniformly over the bearing, and enables the brass to be more easily removed and replaced. The A. R. M. M. A. standard form is shown in Figs. 2243-2265. The drawings, however, have been changed to agree with the revised M. C. B. standards for 1912.

Journal Box. 3, Figs. 976-987; 25, Figs. 1014-1020; 12, Figs. 1027-1031; Figs. 1035-1043, 1992-2017. A cast or malleable iron or cast steel box or case which encloses the journal of a truck axle, the journal bearing and key, and which holds the packing for lubricating the journal. Also called axle box, grease box, housing box, oil box and pedestal box, or simply box. British, usually axle box. The A. R. M. M. A. standard journal boxes and contained parts are shown in Figs. 2243-2265.

See Driving Box and Engine Truck Box.

Journal Box, Bearing and Pedestal. Figs. 2243-2265. Standard M. C. B. 3¾ by 7 in., 4¼ by 8 in., 5 by 9 in., and 5½ by 10 in. Journal boxes and contained parts were also adopted as standards by the American Railway Master Mechanics' Association in 1903. These were revised in 1908 and again in 1913 to conform to M. C. B. practice. The use of skeleton wedges was discontinued in 1914. In 1914 a 6 by 11 in. journal box and contained parts was adopted as recommended practice; this was advanced to standard in 1915.

Journal Box Bolts. 3a, Figs. 976-987. The bolts on either side of the journal box which secure it between the arch bar and the pedestal tie bar of a diamond arch bar truck.

Journal Box Cover or Lid. 9, Figs. 1037-1043. A door or lid covering an aperture on the outside of a tender or engine truck journal box, by means of which oil and packing are supplied and journal bearings are inserted or removed. Such covers are made of cast iron, malleable iron and pressed steel. They are usually closed by a spring.

Journal Box Cover Bolt. A bolt used to fasten covers which have no hinge to the box. Two of these are usually employed to each cover. A gasket or canvas, rubber or leather is used to make a tight joint. Journal box covers are, however, now almost invariably held on by hinges and springs or some arrangement of lugs or grooved joints.

Journal Box Guides. Iron bars or blocks placed one on each side of the journal boxes of some metal frame trucks in which journal springs are used. These irons, while holding the box in place longitudinally and transversely, allow it to have a vertical motion between them. When a pair of these guides is cast in one piece it is called a Pedestal, which see.

Journal Box Hub Liner. 11, Figs. 1037-1043. A thin sheet of soft bearing metal on the face of the box that comes in contact with the wheel hub.

Journal Box Lid. The iron or steel lid or cover which closes the opening in the end of a journal box through which oil and waste for the journal packing is inserted.

Journal Box Lid Spring. 14, Figs. 1037-1043. A flat spring to hold the lid in place.

Journal Brass. See Journal Bearing.

Journal Packing. Waste, wool or other fibrous material saturated with oil or grease, with which a journal box is filled to lubricate the journal.

Journal Spring. A spring placed directly over the journal, and which usually rests on the journal box under the truck frame. Such springs are sometimes placed above the truck frame and supported by straps, and the weight of the car is transmitted to the journal box by a vertical pin or stirrup. Equalizer Springs, which see, accomplish the same end as journal springs and more effectually.

Joy Valve Gear. A form of valve gear in limited use in Great Britain which derives its motion from an arm attached to the main rod near the wrist pin. The link is pivoted at its upper end and by moving it forward or back of the central position the cut-off can be regulated for forward or backward movement of the locomotive.

Jumper (Electric Locomotive). Fig. 219. A flexible cable, composed of one or more conductors, insulated from one another and covered with suitable material to resist abrasion, used to connect the controller circuits of two electric locomotives that are to be coupled for joint operation.

Junction Box. Fig. 2213. See Control System.

K

Key. "In a general sense, a fastener—that which fastens—as a piece of wood in a frame of a building."—Webster.

Hence, a pin inserted in a hole in a bolt and used to secure the bolt or its nut. See Split Key.

"An instrument for opening or shutting a lock by pushing the bolt one way or the other."—Webster.

A block over the top of a journal bearing. A Journal Bearing Wedge, which see. This part is also very commonly called a wedge.

A beveled bar used with a gib to form a Gib and Key.

Key Ring Tire Fastening. A mode of securing the tire to the wheel, composed of two rings, one of U-section and the other nearly rectangular. The U-shaped ring holds the tire and wheel together, and the rectangular ring holds the former in place, filing up the groove in the tire. When both rings are in place the outer lip of the groove in the tire is slightly hammered over, thus gripping the second or key ring, and retaining it in place. See also Tire Fastening.

Kilowatt. See Watt.

King Bolt. See Center Pin.

Knee. A brace or stiffening piece, made of cast or malleable iron or steel, used to bind together two members of a structure, such as a tender frame or a cab frame, at right angles to each other.

Knuckle (M. C. B. Couplers). 9, Figs. 1052-1056; Fig. 1897. The rotating coupling hook by means of which coupling is effected when the knuckle is locked by the catch or lock. It must conform to certain contour lines adopted by the M. C. B. Association.

(Of a Hinge.) The central tubular projections which carry the hinge pin. The term is of wide and general application in mechanics to many similar parts.

Knuckle Joint. "A joint in which a projection on each leg or leaf of a device is inserted between corresponding recesses in the other, the two being connected by a pin or pivot on which they mutually turn. The legs of dividers and the leaves of door hinges are examples of true knuckle joints. The term, however, has been somewhat commonly restricted to compound or universal joints designed to act in any direction."—Knight.

Knuckle Lock. Figs. 1084-1086. The device which locks the knuckle and prevents it from being released when a coupling has been made.

Knuckle Opener (Automatic Couplers). Figs. 1074, 1076. The device which throws the knuckle open when the lock is lifted so that a coupling can be made. With couplers not having a knuckle opener it is necessary to go in between the cars and pull the knuckle open by hand after the lock has been lifted.

Knuckle Pin. 10, Figs. 1052-1056. A pivot on which the knuckle of the pilot or tender coupler turns. See Pivot Pin.

A pin joining two side rods. 23, Figs. 871-883.

L

Ladder. See Safety Appliance Standards for End Ladder Clearance.

Lag Screw. An iron bolt with a square or hexagonal head, and with a wood screw thread cut on it, intended to screw into woods. Lag screws are round under the head, so that they can be turned after they enter the wood. British equivalent, coach screw.

Lagging. Fig. 254; 55, Figs. 101-140. A covering laid on the outside of the boiler to prevent loss of heat by radiation. Usually composed of magnesia and asbestos

and applied in sections made to fit the curvature of the boiler. Sometimes applied to the boiler shell in the form of plaster. It is sheathed with a sheet iron JACKET. Formerly wood was used. See ASBESTOS INSULATING CEMENT.

Lagging Angle. A holder or bracket secured to a boiler to hold the lagging in position.

Laird Crosshead. Fig. 848. See CROSSHEAD.

Lamp. Figs. 1708-1728. A device consisting of a reservoir, a wick, and a globe or chimney, in which oil or other illuminant may be burned for producing light. On a locomotive, in addition to the headlight, there are the GAGE LAMPS, SIGNAL LAMPS and CLASSIFICATION LAMPS.

Lamp Burner. Figs. 1673-1674. That portion of a lamp by which the opening on the top of the reservoir is closed, which holds the wick, and by which the latter is adjusted. A headlight burner is a lamp burner of special form used on headlights.

Lamp Chimney. 15, Figs. 1676-1677; Figs. 1679-1680. A glass tube which encloses the flame of a lamp, conducts away the smoke and gases and produces the necessary draft. Also made of mica.

Lamp Fixture. A bracket secured to the boiler, in the cab, to hold a lamp that illuminates the steam gage. It is usual to place the air gage close to the steam gage so as to be seen by the same light.

Lamp Holder. The bracket or stand to which the gage or water glass lamp is fastened.

Lamp Reservoir. The portion of a lamp which holds the oil. Also called lamp fount.

Lamp Shelf. See HEADLIGHT SHELF.

Lamp Socket. A slotted fixture or holder secured to the smokebox on each side to carry a signal or classification lamp. See SIGNAL LAMP FIXTURE.

Lantern. A portable lamp, the flame in which is protected from wind and rain by glass, usually in the form of a globe surrounded by wires, called guards. According to the number of these wires the lantern is called single, double or triple guard. See SIGNAL LAMP.

Lap (Valve). The amount by which the edges of a Valve, when in the center of the valve seat or chamber, overlap the edges of either steam port. See INSIDE LAP and OUTSIDE LAP.

Lap Joint. Figs. 202-204. A method of fastening together the ends of a boiler plate or of two plates by laying the edge of one plate over that of the other and then riveting them. The number of rows of rivets designates the kind of lap joint as single riveted lap joint and double riveted lap joint. Formerly used in making the longitudinal seams in locomotive boilers but now generally restricted to the circumferential and throat seams.

Latch. A kind of gravity lock or door fastening consisting of some form of pivoted bolt falling into and catching against a catch or stop. (Century Dictionary.)

Lateral Motion. A movement sidewise, more particularly meaning, as generally used, a side or swing motion of the bolster of a swing motion truck, in distinction from the end play of an axle under the journal. A lateral motion spring, which is slipped over a lateral motion spring pin, is sometimes used to check the lateral movement of such swing bolsters, but this end is more commonly accomplished by splaying the swing hangers outward.

Lateral Motion Spring. See above.

Lateral Motion Spring Pin. See above.

Lateral Play. Side motion of any part of a car or machinery; the space left to permit of such side motion. See LATERAL MOTION (of a Truck Bolster), END PLAY (of an Axle.)

Lead (Valves). The amount by which a valve uncovers or opens a steam port at the beginning of the stroke of the piston. This results in admitting live steam to the cylinder before the piston reaches the end of the preceding stroke.

Lead-Lined Journal Bearing. A journal bearing which has its inner surface covered with a thin layer of lead, so that it may fit itself to the journal as soon as subjected to wear.

Leakage Groove (of Air Brake Cylinder). A small passage past the brake piston to prevent application of the brakes by trifling leakages of air.

Lens. An optical instrument for conveying rays of light upon a fixed path or fixed point. Lenses for lanterns consist of three types—bull's-eye, double convex or plano convex lens; semaphore (a mere modification of the Fresnel), and the Fresnel proper, the latter rarely used.

Lentz Stayless Boiler. A boiler having a corrugated cylindrical firebox which does not require staying. Used to some extent in Germany and Austria. See VANDERBILT BOILER.

Lever. "In mechanics, a bar of metal, wood or other substance, turning on a support called a fulcrum." —Webster. See BRAKE LEVER, BRAKE EQUALIZING LEVER, CYLINDER LEVER, DEAD LEVER, FLOATING LEVER, LIVE LEVER, UNCOUPLING LEVER.

Lever Draft Gear. Figs. 1880-1883. An arrangement of cam-shaped levers acting on the draft springs as the drawbar moves so that the leverage on the spring decreases as the load is applied, thus increasing the resisting power of the springs.

Lever Guide. 15, Figs. 1913-1920. A slotted bar to guide the upper end of a brake lever and hold it in position laterally. More properly BRAKE LEVER GUIDE.

Lever Pin. A pin or pivot passing through holes in a brake lever guide to adjust the lever in accordance with the wear of the brake shoes.

Lifting Link (Walschaert Valve Gear). A short bar attached to the reverse shaft arm at one end and to the radius bar at the other to move the radius bar up or down in the link and thus move the valve in the steam chest. It performs the same function for the Walschaert gear that the link hanger or link lifter does for the Stephenson gear.

Lifting Shaft. See REVERSE SHAFT.

Lightning Arrester (Electric Locomotive). A device for protecting electrical apparatus from damage by lightning. It usually consists of an air gap in series with a non-inductive resistance connected between the power circuit and the ground. The gap serves as an easier path to ground for high voltage discharge than that through the electrical apparatus which has a high inductance. The gap is provided with a magnetic blowout that extinguishes the arc after discharge.

Limit Gages for Round Iron. At the convention of the American Railway Master Mechanics' Association, in

1884, the Pratt & Whitney limit gages for round iron, shown, were adopted as standard. Reaffirmed 1891.

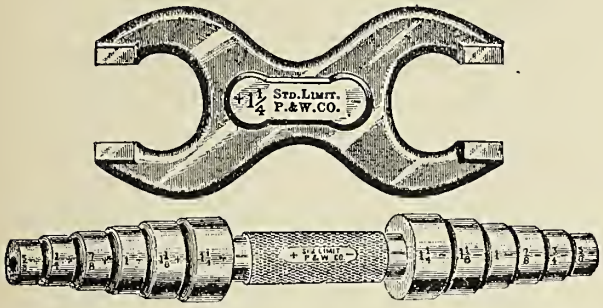

Nominal diameter, inches.	Large size, end. Inches.	Small size, end. Inches.	Total variation, Inches.
¼	.2550	.2450	.010
5/16	.3180	.3070	.011
⅜	.3810	.3690	.0022
7/16	.4440	.4310	.013
½	.5070	.4930	.014
9/16	.5700	.5550	.015
⅝	.6330	.6170	.016
¾	.7585	.7415	.017
⅞	.8840	.8660	.018
1	1.0095	.9905	.019
1⅛	1.1350	1.1150	.020
1¼	1.2605	1.2395	.021
1⅜	1.3860	1.3640	.022
1½	1.5115	1.4885	.023
1⅝	1.6370	1.6130	.024
1¾	1.7625	1.7375	.025
1⅞	1.8880	1.8620	.026

Round iron 2 in. in diameter and over should be rolled to the nomina. diameter.

Line and Line. A term used to designate the position of a slide valve having no lap. A valve whose edge coincides with the edge of the steam port when the piston is at the end of its stroke, is said to be set line and line.

Line Check Valve. 307, Figs. 101-140; Figs. 1378, 1383, 1388. A check valve placed in the boiler feed pipe between the injector and boiler check valve. Also called intermediate check valve.

Line Switch. Figs. 2215-2216. See Control System.

Liner. A facing interposed between two surfaces to diminish the wear and as a means of reinforcement. Liners are used between the driving wheel hubs and driving boxes, between the firebox and the expansion pads, etc. See Smokebox Liner, Smokebox Door Liner.

Link. "A short connecting piece, of circular or other equivalent shape; as one of the oval rings or divisions of a chain."—Knight.

(Coupling Links.) A short bar with an eye at each end for connecting two things together or for supporting one from another. When used alone the term in this connection always means a Coupling Link.

(Valve Gear.) 64, Figs. 101-140; 7, Figs 648-761; 35, Figs. 697-701; Figs. 714, 726, 736. A slotted piece of metal, slightly curved, part of a valve gear. In the Stephenson gear the link has an eccentric rod attached to each end, and by means of a hanger on the reverse arm, the position of the link can be altered so as to put either eccentric rod wholly or partly in operation. In the Walschaert gear the link is fixed or stationary in contrast to the shifting Stephenson link, being pivoted at its center to a bracket or fixed support and operated by a rod that receives its motion from a return crank on the main crank pin. To alter the position of the valve the link block is shifted, thus moving the rod attached to the valve stem.

Link and Pin Coupler. An old type of drawbar by which cars were connected together by a link and a pin. There were a great variety of shapes and devices, but they have now been almost entirely replaced by the M. C. B. automatic coupler.

Link Block. 8, Figs. 648-761; 36, Figs. 697-701. An iron or steel block fitted on two faces to the curvature of the inside of the link and sliding in it, and having a pivot by which it transmits motion to the end of the rocker or transmission bar.

Link Block Pin. 29, Figs. 648-761. A pivot secured to the link block and connecting it to the rocker arm.

Link Bracket. 259, Figs. 101-140. A casting for supporting the link in connection with the Walschaert valve gear. It is usually bolted to the guide yoke and the frame, though occasionally it is held by one of these parts alone. Also called link support.

Link End Block. A piece forming either end of a built-up link, held to the sides of the link by a bolt passing through it. Also called a link filling piece.

Link End Block Bolt. A bolt holding a link end block in place.

Link Hanger (Valve Gear). See Link Lifter.

(Swing Motion Trucks.) See Swing Link.

Link Hanger Eye Bolt. A bolt passing through the truck transoms, from which a short swing hanger is suspended.

Link Lifter. 65, Figs. 101-140; 14, Figs. 648-761; 38, Figs. 697-701. A bar by which the link is raised or lowered, having its upper end pivoted to the end of the reverse shaft arm and its lower end to a link saddle by means of the link saddle pine. On locomotives having a transmission bar, by means of which the link block moves the rocker, the lifters are often made double, one on each side of the link. Called also a link hanger and lifting link. British, link suspension rod or suspension link.

Link Lifter Oil Cup. An oil cup attached to a link lifter and having an oil pipe leading from it to the bearing of the link saddle pin.

Link Motion. The name given to the arrangement of links, rockers, eccentric rods, etc., for changing the relative positions of the valves and the valve seat of a locomotive and thus regulating the admission of steam to either end of the cylinders. The purpose of link motion is to enable the engineman to control the admission of steam through the valve ports to the cylinders, so that the locomotive may run either forward or backward, at high speed or low speed. See Valve Gear.

Link Oil Cup. An oil cup attached to a link to distribute oil to the inside wearing surfaces.

Link Plate (Walschaert Valve Gear). A curved strip or covering piece, bolted to the side of the link.

Link Saddle. 28, Figs. 648-761; 37, Figs. 697-701. A plate or holder bolted to the link midway between the ends and carrying a pin for the attachment of the link lifter.

Link Saddle Bolt. One of the bolts that fasten a link saddle to a link.

Link Saddle Pin. 29, Figs. 648-761. A pivot secured to the link saddle and passing through the lower end of a link lifter.

Link Saddle Pin Washer. A washer on the end of a saddle pin under the head of the nut.

Link Suspension Rod (British). See Link Lifter.

Lip. See Retaining Lip (Steel Tired Wheels).

Live Lever. 13, Figs. 1913-1920. The one of a pair of truck brake levers to which the brake power is first applied is sometimes given this title, the other lever being termed the dead lever.

Lock. A fastening between two pieces.

A device to prevent movement of one part relative to another.

A fastening for a door operated by a key.

(M. C. B. Couplers.) The catch which drops in front of the tail of the knuckle and holds it in place when two couplers come together. Fig. 1890-1894.

Lock Lifter (Automatic Coupler). Figs. 1890-1894. The part of the mechanism inside the coupler head in some types of M. C. B. couplers which is moved by the uncoupling rod and in moving lifts the knuckle lock so that the knuckle can open.

Lock Nut. Figs. 856-857, Figs. 2065-2078. The outer one of a pair of nuts on one bolt, which, by screwing up separately to a tight bearing, locks the inner one. A large number of special forms of lock nuts and nut locks, which serve the same purpose, are in use which are not strictly included under the above definition.

Locomotive. General Views, Figs. 3-100. General Drawings. Figs. 101-145. A self-propelled vehicle running on rails, for the purpose of hauling cars. It may be operated by steam, electricity, gas from volatile oils, or compressed air. Compressed air locomotives resemble steam locomotives in general design, but use the expansive force of compressed air instead of steam. See Electric Locomotives. Steam locomotives consist of a boiler and engine mounted on a frame supported on wheels which are turned by the engine. The boiler contains water and has a firebox forming part of it in which fuel is burned to supply heat to the water and convert it into steam. The steam passes through a throttle valve, thence through pipes to the steam chests, from which valves, operated by various forms of valve gears, automatically admit it alternately to each end of the cylinders and exhaust it therefrom into the atmosphere through the exhaust pipes and stack. The expansive force of the steam moves the pistons, piston rods and crossheads back and forth, and, as the crosshead moves in guides, and has one end of the main rod connected to it at the wrist pin, while the other end of the main rod is connected to the crank pin on the driving wheel, the reciprocating motion of the piston is thereby changed into a rotary motion of the driving wheels. A locomotive thus transforms stored-up or potential energy of fuel into the kinetic energy or mechanical work of propelling itself and hauling cars.

For different classes and wheel arrangements of locomotives see Whyte's Nomenclature on pages 150 and 151. See also American Type, Atlantic Type, Bicycle Type, Centipede, Columbia Type, Compound, Consolidation, Cross Compound, Decapod, Double Ender, Dummy, Eight Wheel, Eight-Wheel Switcher, Electric, Fireless, Forney Type, Four-Wheel Switcher, Inside Connected, Inspection, Logging, Mastodon, Mikado, Mining, Mogul, Mountain Type, Prairie Type, Pacific Type, Rack, Saddle Tank, Santa Fe Type, Side Tank, Six-Wheel Switcher, Steam Storage, Switching, Tank, Ten-Wheel, Ten-Wheel Switcher and Twelve-Wheel Locomotives.

During the past thirty years there has been a marked tendency toward increasing the weight of locomotives for all classes of service. In 1876 a locomotive with a cylinder 16 inches in diameter and 24-inch piston stroke was usual on American railways. Such engines had a total heating surface of between 1,100 square feet and 1,200 square feet, and weighed about 40 tons. The weights of trains were being increased and this led to the introduction of 17-inch x 24-inch cylinders until the limits of the boiler capacity to furnish steam had been reached. Up to this time the firebox was narrow and was down between the frames. The raising of the foundation ring to the top of the frames and widening it so that the outside of the firebox occupied the whole of the distance between the driving wheels, made possible an increase of grate area, and with it the heating surface and the steaming capacity of the boiler. This was an epoch in the development made by Mr. Theodore N. Ely in the Class K locomotives built for the Pennsylvania R. R. in 1881. Advantage was at once taken of this to increase the power, but it was done cautiously because of the prevailing opinion that the weight on any single wheel should not exceed 12,000 pounds. When the track was made strong enough, weights and heating surfaces were increased until in 1890 engines with 1,800 to 1,900 square feet of heating surface were not uncommon.

The demand for increased power still continuing, the next step was to place the firebox back of the driving wheels and then widen it so as to extend over a pair of trailing wheels of small diameter that were used to carry it. This can reasonably be called another marking point in the history of the locomotive, and was first done by the Baldwin Locomotive Works in their Columbia (2-4-2) locomotive shown at the Chicago Exposition in 1893. This made it possible to obtain a firebox whose dimensions were limited only by the clearances of the right of way and the ability of the fireman to shovel coal.

With these possibilities the sizes of locomotives and boilers have been rapidly increased. The tubes have been lengthened from 12 feet or less, the common practice during the early stages of this development, to 18 or 19 feet, while tubes 20 feet to 24 feet long are now in use on some of the large Mallet locomotives. Heating surfaces have increased to more than 6,000 square feet, and on some of the large Mallet locomotives it has reached nearly 7,000 square feet, with an additional 1,300 square feet of superheating surface, and the weights on driving wheels have risen to more than 30,000 pounds on each wheel.

The refinement in locomotive engineering and the introduction of superheaters, brick arches and other devices that make for economy are extending some of the limitations to higher power, and as this progresses the demand may come for a further increase of the tractive effort of ordinary road locomotives (30,000 pounds to 70,000 pounds) to a nearer approach to certain special types that now have a tractive effort of more than 115,000 pounds.

A good summary of locomotive performances is that included in the report of the tests made on the locomotive testing plant of the Pennsylvania Railroad at the St. Louis Exposition in 1904. This summary is reprinted below. Four passenger and four freight locomotives were tested at various speeds and different loads. Of the freight locomotives two were simple engines, one a two-cylinder cross-compound and one a four-cylinder tandem compound. The passenger locomotives were all four-cylinder engines

compounded on different systems. Two were European engines. The summary follows:

BOILER PERFORMANCE.

1. Contrary to a common assumption, the results show that when forced to maximum power, the large boilers delivered as much steam per unit area of heating surface as the small ones.

2. At maximum power, a majority of the boilers tested delivered 12 or more pounds of steam per square foot of heating surface per hour; two delivered more than 14 pounds, and one, the second in point of size, delivered 16.3 pounds. These values expressed in terms of boiler horsepower per square foot of heating surface are 0.34, 0.40 and 0.47, respectively.

3. The two boilers holding the first and second place with respect to weight of steam delivered per square foot of heating surface are those of passenger locomotives.

4. The quality of steam delivered by the boilers of locomotives under constant conditions of operation is high, varying somewhat with different locomotives and with changes in the amount of power developed, between the limits of 98.3 per cent. and 99.0 per cent.

5. The evaporative efficiency is generally maximum when the power delivered is least. Under conditions of maximum efficiency, most of the boilers tested evaporated between 10 and 12 pounds of water per pound of dry coal. The efficiency falls as the rate of evaporation increases. When the power developed is greatest, its value commonly lies between limits of 6 and 8 pounds of water per pound of dry coal.

6. The observed temperature of the firebox under low rates of combustion lies between the limits of 1,400 degrees F. and 2,000 degrees F., depending apparently upon characteristics of the locomotive. As the rate of combustion is increased, the temperature slowly increases, maximum values generally lying between the limits of 2,100 and 2,300 degrees F.

7. The smokebox temperature for all boilers, when worked at light power, is not far from 500 degrees F. As the power is increased, the temperature rises, the maximum value depending upon the extent to which the boiler is forced. For the locomotives tested, it lies in most cases between 600 and 700 degrees.

8. With reference to grate area, the results prove beyond question that the furnace losses due to excess air are not increased by increasing the area. In general, it appears that the boilers for which the ratio of grate surface to heating surface is largest are those of greatest capacity.

9. A brick arch in the firebox results in some increase in furnace temperature and improves the combustion of the gases.

10. The loss of heat through imperfect combustion is in most cases small, except as represented by the discharge from the stack of solid particles of fuel.

11. Relatively large firebox heating surface appears to give no advantage either with reference to capacity or efficiency. The fact seems to be that the tube heating surface is capable of absorbing such heat as may not be taken up by the firebox.

12. The value of the Serve tube over the plain tube of the same outside diameter, either as a means for increasing capacity or efficiency, was not definitely determined.

13. The draft in the front end for any given rate of combustion as measured in inches of water, depends upon the proportions of the locomotive and the thickness and condition of the fire. Under light power, its value may not exceed an inch, but it increases rapidly as the power is increased. Representative maximum values derived from the tests lie between the limits of 5 inches and 8.8 inches.

14. Insufficient openings in the ash pan and the mechanism of the front end, especially the diaphragm, are shown by the tests to lead to the dissipation of considerable portions of the draft force.

THE ENGINE.

15. The indicated horsepower of the modern simple freight locomotive tested may be as great as 1,000 or 1,100; that of a modern compound passenger locomotive may exceed 1,600 horsepower.

16. The maximum indicated horsepower per square foot of grate surface lies, for the freight locomotives, between the limits of 31.2 and 21.2; for the passenger locomotives, between the limits of 33.5 and 28.1.

17. The steam consumption per indicated horsepower hour necessarily depends upon the conditions of speed and cut-off. For the simple freight locomotives tested, the average minimum is 23.7. The consumption when developing maximum power is 23.8, and when under those conditions which proved to be the least efficient, 29.0.

18. The compound locomotives tested, using saturated steam, consumed from 18.6 to 27 pounds of steam per indicated horsepower hour. Aided by a superheater, the minimum consumption is reduecd to 16.6 pounds of superheated steam per hour.

19. In general, the steam consumption of simple locomotives decreases with increase of speed, while that of the compound locomotives increases. From this statement it appears that the relative advantages to be derived from the use of the compound diminish as the speed is increased.

20. Tests under a partially opened throttle show that when the degree of throttling is slight, the effect is not appreciable. When the degree of throttling is more pronounced, the performance is less satisfactory than when carrying the same load with a full throttle and a shorter cut-off.

THE LOCOMOTIVE AS A WHOLE.

21. The percentage of the cylinder power which appears as a stress in the drawbar diminishes with increase of speed. At 40 revolutions per minute, the maximum is 94 and the minimum 77; at 280 revolutions per minute, the maximum is 87 and the minimum 62.

22. The loss of power between the cylinder and drawbar is greatly affected by the character of the lubricant. It appears from the tests that the substitution of grease for oil upon axles and crank pins increases the machine friction from 75 to 100 per cent.

23. The coal consumption per dynamometer horsepower hour, for the simple freight locomotives tested, is at low speeds not less than 3.5 pounds nor more than 4.5 pounds, the value varying with running conditions. At the highest speeds covered by the tests, the coal consumption for the simple locomotives increased to more than 5 pounds.

24. The coal consumption per dynamometer horsepower hour, for the compound freight locomotives tested is, for low speeds, between 2.0 and 3.7 pounds. Results at higher speeds were obtained only from a two-cylinder compound, the efficiency of which under all conditons is shown to be very high. The coal consumption per dynamometer horsepower hour for

this locomotive at the higher speeds increases from 3.2 to 3.6 pounds.

25. The coal consumption per dynamometer horsepower hour, for the four compound passenger locomotives tested, varies from 2.2 to more than 5 pounds per hour, depending upon the running conditions. In the case of all of these locomotives, the consumption increases rapidly as the speed is increased.

26. A comparison of the performance of the compound freight locomotives with that of the simple freight locomotives is very favorable to the compounds. For a given amount of power at the drawbar, the poorest compound shows a saving in coal over the best simple which will average about 10 per cent., while the best compound shows a saving over the poorest simple which is not far from 40 per cent. It should be remembered, however, that the conditions of the tests, which provide for the continuous operation of the locomotives at constant speed and load throughout the period covered by the observations, are all favorable to the compound.

27. It is a fact of more than ordinary significance that a steam locomotive is capable of delivering a horsepower at the drawbar upon the consumption of but a trifle more than 2 pounds of coal per hour. This fact gives the locomotive high rank as a steam power plant.

28. It is worthy of mention that the coal consumption per horsepower hour, developed at the drawbar by the different locomotives tested; presents marked differences. Some of these are easily explained from a consideration of the characteristics of the locomotives involved. Where the data is not sufficient to permit the assignment of a definite cause, there can be no doubt but that an extension of the study already made will serve to reveal it.

Locomotive Badge Plate. See Name Plate.

Locomotives, Inspection and Testing. The Interstate Commerce Commission has ordered that the following rules and instructions for the inspection of steam locomotives and tenders be made effective on and after January 1, 1916. Rules 18, 29 and 31, referring to automatic bell ringers and locomotive headlights, were not finally decided upon when this edition went to press.

1. The railroad company will be held responsible for the general design, construction and maintenance of locomotives and tenders under its control.

2. The mechanical officer in charge, at each point where repairs are made, will be held responsible for the inspection and repair of all parts of locomotives and tenders under his jurisdiction. He must know that inspections are made as required and that the defects are properly repaired before the locomotive is returned to service.

3. The term "inspector" as used in these rules and instructions means, unless otherwise specified, the railroad company's inspector.

4. Each locomotive and tender shall be inspected after each trip, or day's work, and the defects found reported on an approved form to the proper representative of the company. This form shall show the name of the railroad, the initials and number of the locomotive, the place, date and time of the inspection, the defects found, and the signature of the employee making the inspection. The report shall be approved by the foreman, with proper written explanation made thereon for defects reported which were not repaired before the locomotive is returned to service. The report shall then be filed in the office of the railroad company at the place where the inspection is made.

Form No. 2. Locomotive { Number..... Initials.....

..... *Railroad.*

LOCOMOTIVE INSPECTION REPORT.

Instructions.—Each locomotive and tender must be inspected after each trip or day's work and report made on this form, whether needing repairs or not. Proper explanation must be made hereon for failure to repair any defects reported, and the form approved by foreman, before the locomotive is returned to service.

Inspected at ....., time ..... m. Date 191

Repairs needed:

.....

.....

.....

.....

.....

.....

Condition of injectors..... Water glass.....

Condition of gauge cocks..... Brakes.....

Condition of piston rod and valve stem packing.....

Safety valve lifts at ..... pounds. Seats at ..... pounds.

Main reservoir pressure, ... pounds. Brake pipe pressure, ... pounds.

(Signature) .....,

(Occupation) .....

The above work has been performed, except as noted, and the report is approved.

....., *Foreman.*

Note.—Additional items may be added to this form if desired.

Form No. 2—Locomotive Inspection Report.

ASH PANS

5. Ash pans shall be securely supported and maintained in safe and suitable condition for service.

Locomotives built after January 1, 1916, shall have ash pans supported from mud rings or frames. Locomotives built prior to January 1, 1916, which do not have the ash pans supported from mud rings or frames shall be changed when the locomotive receives new firebox.

The operating mechanism of all ash pans shall be so arranged that it may be safely operated, and maintained in safe and suitable condition for service.

No part of ash pan shall be less than 2½ in. above the rail.

BRAKE AND SIGNAL EQUIPMENT

6. It must be known before each trip that the brakes on locomotive and tender are in safe and suitable condition for service; that the air compressor or compressors are in condition to provide an ample supply of air for the service in which the locomotive is put; that the devices for regulating all pressures are properly performing their functions; that the brake valves work properly in all positions; and that the water has been drained from the air brake system.

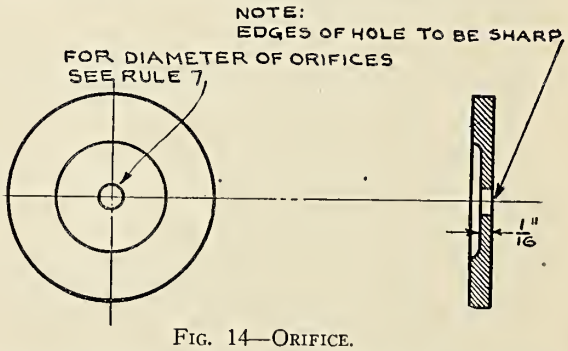

Fig. 14—Orifice.

7. *Compressors.*—The compressor or compressors shall be tested for capacity by orifice test as often as

conditions may require, but not less frequently than once each three months.

The diameter of orifice, speed of compressor, and the air pressure to be maintained for compressors in common use are given in the following table:

Make	Size compressor.	Single strokes per minute.	Diameter of orifice. *Inches.*	Air pressure maintained. *Pounds.*
Westinghouse	9½	120	$\frac{11}{64}$	60
Do	11	100	$\frac{3}{16}$	60
Do	8½ c. c	100	$\frac{3}{32}$	60
New York	2a	120	$\frac{5}{32}$	60
Do	6a	100	$\frac{13}{64}$	60
Do	5b	100	$\frac{19}{64}$	60

For diagram of orifice see figure No. 14.

This table shall be used for altitudes to and including 1,000 feet. For altitudes over 1,000 feet the speed of compresser may be increased 5 single strokes per minute for each 1,000 feet increase in altitude.

8. *Testing Main Reservoirs.*—Every main reservoir before being put into service, and at least once each 12 months thereafter, shall be subjected to hydrostatic pressure not less than 25 per cent above the maximum allowed air pressure.

The entire surface of the reservoir shall be hammer tested each time the locomotive is shopped for general repairs, but not less frequently than once each 18 months.

9. *Air gages.*—Air gages shall be so located that they may be conveniently read by the engineer from his usual position in the cab. Air gages shall be tested at least once each three months, and also when any irregularity is reported.

Air gages shall be compared with an accurate test gage or dead weight tester, and gages found incorrect shall be repaired before they are returned to service.

10. *Time of Cleaning.*—Distributing or control valves, reducing valves, triple valves, straight-air double-check valves, dirt collectors, and brake cylinders shall be cleaned, and brake cylinders lubricated as often as conditions require to maintain them in a safe and suitable condition for service, but not less frequently than once each six months.

11. *Stenciling Dates of Tests and Cleaning.*—The date of testing or cleaning, and the initials of the shop or station at which the work is done, shall be legibly stenciled in a conspicuous place on the parts, or placed on a card displayed under glass in the cab of the locomotive, or stamped on metal tags. When metal tags are used, the height of letters and figures shall be not less than three-eighths inch, and the tags located as follows:

One securely attached to brake pipe near automatic brake valve, which will show the date on which the distributing valve, control valve or triple valves, reducing valves, straight-air double-check valves, dirt collectors, and brake cylinders were cleaned and cylinders lubricated.

One securely attached to air compressor steam pipe, which will show the date on which the compressor was tested by orifice test.

One securely attached to the return pipe near main reservoir, which will show the date on which the hydrostatic test was applied to main reservoirs.

12. *Piston Travel.*—The minimum piston travel shall be sufficient to provide proper brake shoe clearance when the brakes are released.

The maximum piston travel when locomotive is standing shall be as follows:

	Inches.
Cam type of driving-wheel brake	3½
Other forms of driving-wheel brake	6
Engine-truck brake	8
Tender brake	9

13. *Foundation Brake Gear.*—Foundation brake gear shall be maintained in a safe and suitable condition for service. Levers, rods, brake beams, hangers, and pins shall be of ample strength, and shall not be fouled in any way which will affect the proper operation of the brake. All pins shall be properly secured in place with cotters, split keys, or nuts. Brake shoes must be properly applied and kept approximately in line with the tread of the wheel.

No part of the foundation brake gear of the locomotive or tender shall be less than 2½ in. above the rails.

14. *Leakage.*—Main reservoir leakage; leakage from main reservoir and related piping shall not exceed an average of 3 lbs. per minute in a test of three minutes' duration, made after the pressure has been reduced 40 per cent below maximum pressure.

Brake pipe leakage shall not exceed 5 lbs. per minute.

Brake Cylinder Leakage.—With a full service application from maximum brake pipe pressure, and with communication to the brake cylinders closed, the brakes on the locomotive and tender shall remain applied not less than five minutes.

15. *Train Signal System.*—The train signal system, when used, shall be tested and known to be in safe and suitable condition for service before each trip.

CABS, WARNING SIGNALS, AND SANDERS

16. *Cabs.*—Cabs shall be securely attached or braced and maintained in a safe and suitable condition for service. Cab windows shall be so located and maintained that the enginemen may have a clear view of track and signals from their usual and proper positions in the cab.

Road locomotives used in regions where snowstorms are generally encountered shall be provided with what is known as a "clear vision" window, which is a window hinged at the top and placed in the glass in each front cab door or window. These windows shall be not less than 5 inches high, located as nearly as possible in line of the enginemen's vision, and so constructed that they may be easily opened or closed.

Steam pipes shall not be fastened to the cab. On new construction or when renewals are made of iron or steel pipe subject to boiler pressure in cabs, it shall be what is commercially known as double-strength pipe, with extra heavy valves and fittings.

17. *Cab Aprons.*—Cab aprons shall be of proper length and width to insure safety. Aprons must be securely hinged, maintained in a safe and suitable condition for service, and roughened, or other provision made, to afford secure footing.

18. (*Not yet decided upon.*)

19. *Cylinder Cocks.*—Necessary cylinder cocks, operative from cab of locomotive, shall be provided and maintained in a safe and suitable condition for service.

20. *Sanders.*—Locomotives shall be equipped with proper sanding apparatus, which shall be maintained in safe and suitable condition for service, and tested before each trip. Sand pipes must be securely fastened in line with the rails.

21. *Whistle.*—Each locomotive must be provided with a suitable steam whistle, so arranged that it may be conveniently operated by the engineer.

DRAW GEAR AND DRAFT GEAR

22. *Draw Gear Between Locomotive and Tender.*—The draw gear between the locomotive and tender, together with the pins and fastenings, shall be maintained in safe and suitable condition for service. The pins and

drawbar shall be removed and carefully examined for defects not less frequently than once each three months. Suitable means for securing the drawbar pins in place shall be provided. Inverted drawbar pins shall be held in place by plate or stirrup.

Two or more safety bars or safety chains of ample strength shall be provided between locomotive and tender, maintained in safe and suitable condition for service, and inspected at the same time draw gear is inspected.

Safety chains or safety bars shall be of the minimum length consistent with the curvature of the railroad on which the locomotive is operated

Lost motion between locomotives and tenders not equipped with spring buffers shall be kept to a minimum, and shall not exceed one-half inch.

When spring buffers are used between locomotive and tender the springs shall be applied with not less than three-fourths inch compression, and shall at all times be under sufficient compression to keep the chafing faces in contact.

23. *Chafing Irons.*—Chafing irons of such radius as will permit proper curving shall be securely attached to locomotive and tender, and shall be maintained in condition to permit free movement laterally and vertically.

24. *Draft Gear.*—Draft gear and attachments on locomotives and tenders shall be securely fastened, and maintained in safe and suitable condition for service.

DRIVING GEAR

25. *Crossheads.*—Crossheads shall be maintained in a safe and suitable condition for service, with not more than one-fourth inch vertical or five-sixteenths inch lateral play between crossheads and guides.

26. *Guides.*—Guides must be securely fastened and maintained in a safe and suitable condition for service.

27. *Piston and Piston Rods.*—Pistons and piston rods shall be maintained in safe and suitable condition for service. Piston rods shall be carefully examined for cracks each time they are removed, and shall be renewed if found defective.

All piston rods applied after January 1, 1916, shall have the date of application, original diameter, and kind of material legibly stamped on or near the end of rod.

28. *Rods, Main and Side.*—Cracked or defective main or side rods shall not be continued in service.

Autogenous welding of broken or cracked main and side rods not permitted.

Bearings and bushings shall so fit the rods as to be in a safe and suitable condition for service, and means be provided to prevent bushings turning in rod. Straps shall fit and be securely bolted to rods.

The total amount of side motion of rods on crank pins shall not exceed one-fourth inch.

Locomotives Used in Road Service.—The bore of main rod bearings shall not exceed pin diameters more than three-thirty-seconds inch at front or back end. The total lost motion at both ends shall not exceed five-thirty-seconds inch.

The bore of siderod bearings shall not exceed pin diameters more than five-thirty-seconds inch on main pin, nor more than three-sixteenths inch on other pins.

Locomotives Used in Yard Service.—The bore of main rod bearings shall not exceed pin diameters more than one-eighth inch at front end or five thiry-seconds inch at back end.

The bore of side rod bearings shall not exceed pin diameter more than three-sixteenths inch.

Oil and grease cups shall be securely attached to rods, and grease cup plugs shall be equipped with suitable fastenings.

LIGHTS

29. (*Not yet decided upon.*)

30. *Classification Lamps.*—Each locomotive used in road service shall be provided with such classification lamps as may be required by the rules of the railroad company operating the locomotive. When such classification lamps are provided they shall be kept clean and maintained in safe and suitable condition for service.

31. (*Not yet decided upon.*)

32. Cab Lights.—Each locomotive used between sunset and sunrise shall have cab lamps which will provide sufficient illumination for the steam, air, and water gages to enable the enginemen to make necessary and accurate readings from their usual and proper positions in the cab. These lights shall be so located and constructed that the light will shine only on those parts requiring illumination. Locomotives used in road service shall have an additional lamp conveniently located to enable the persons operating the locomotive to easily and accurately read train orders and time-tables, and so constructed that it may be readily darkened or extinguished.

RUNNING GEAR

33. *Driving, Trailing and Engine Truck Axles.*—Driving, trailing and engine truck axles with any of the following defects shall not be continued in service:

Bent axle; cut journals that can not be made to run cool without turning; seamy journals in steel axles; transverse seams in iron axles, or any seams in iron axles causing journals to run hot, or unsafe on account of usage, accident or derailment; driving, trailing, or engine truck axles more than one-half inch under original diameter, except for locomotives having all driving axles of the same diameter, when other than main driving axles may be worn three-fourths inch below the original diameter.

The date applied, the original diameter of the journal, and the kind of material shall be legibly stamped on one end of each driving axle, trailing truck axle, and engine truck axle applied after January 1, 1916.

34. *Tender Truck Axles.*—The minimum diameters of axles for various axle loads shall be as follows:

Axle load	Minimum diameter of journal. Inches.	Minimum diameter of wheel seat. Inches	Minimum diameter of center. Inches.
50,000 pounds	5½	7⅜	6 7/16
38,000 pounds	5	6¾	5⅞
31,000 pounds	4½	6¼	5 5/16
22,000 pounds	3¾	5	4⅜
15,000 pounds	3¼	4⅝	3⅞

35. Tender truck axles with any of the following defects shall not be continued in service:

Bent axle; cut journals that can not be made to run cool without turning; seamy journals in steel axles, or transverse seams in journals of iron axles, or unsafe on account of usage, accident or derailment; collars broken or worn to one-fourth inch or less in thickness; fillet in back shoulder worn out.

36. *Crank Pins.*—Crank pins shall be securely applied. Shimming or prick punching crank pins will not be allowed. All crank pins applied after January 1, 1916, shall have the date applied and kind of material used legibly stamped on end of pin.

Crank pin collars and collar bolts shall be maintained in a safe and suitable condition for service.

37. *Driving Boxes.*—Driving boxes shall be maintained in a safe and suitable condition for service. Broken and loose bearings shall be renewed. Not more than one shim may be used between box and bearing.

38. *Driving Box Shoes and Wedges.*—Driving box shoes and wedges shall be maintained in a safe and suitable condition for service.

39. *Frames.*—Frames, deck plates, tailpieces, pedestals, and braces shall be maintained in a safe and suitable condition for service, and shall be cleaned and thoroughly inspected each time the locomotive is in shop for heavy repairs.

40. *Lateral Motion.*—The total lateral motion or play between the hubs of the wheels and the boxes on any pair of wheels shall not exceed the following limits:

	Inch.
For engine truck wheels (trucks with swing centers)..	1
For engine truck wheels (trucks with rigid centers)....	1½
For trailing truck wheels.....	1
For driving wheels (more than one pair).....	¾

These limits may be increased on locomotives operating on track where the curvature exceeds 20 degrees when it can be shown that conditions require additional lateral motion.

The lateral motion shall in all cases be kept within such limits that the driving wheels, rods, or crank pins will not interfere with other parts of the locomotive.

41. *Pilots.*—Pilots shall be securely attached, properly braced, and maintained in a safe and suitable condition for service.

The minimum clearance of pilot above the rail shall be 3 inches, and the maximum clearance 6 in.

42. *Spring Rigging.*—Springs and equalizers shall be arranged to insure the proper distribution of weight to the various wheels of the locomotive, maintained approximately level, and in a safe and suitable condition for service.

Springs or spring rigging with any of the following defects shall be renewed or properly repaired:

One long leaf or two more shorter leaves broken.

Springs with leaves working in band.

Broken coil springs.

Broken driving box saddle, equalizer, hanger, bolt, or pin.

43. *Trucks, Leading and Trailing.*—Trucks shall be maintained in safe and suitable condition for service. Center plates shall fit properly, and the male center plate shall extend into the female center plate not less than three-fourths inch. All centering devices shall be properly maintained.

A suitable safety chain shall be provided at each front corner of all four-wheel engine trucks.

All parts of trucks shall have sufficient clearance to prevent them from seriously interfering with any other part of the locomotive.

44. *Wheels.*—Wheels shall be securely pressed on axles. Prick punching or shimming the wheel fit will not be permitted. The diameter of wheels on the same axle shall not vary more than three-thirty-seconds inch.

Wheels used on standard gage track will be out of gage if the inside gage of flanges, measured on base line, is less than 53 in. or more than 53⅜ in.

The distance back to back of flanges of wheels mounted on the same axle shall not vary more than one-fourth inch.

45. *Cast Iron or Cast Steel Wheels.*—Cast iron or cast steel wheels with any of the following defects shall not be continued in service:

Slid Flat.—When the flat spot is 2½ in. or over in length, or if there are two or more adjoining spots each 2 in. or over in length.

Broken or Chipped Flange.—If the chip exceeds 1½ in. in length and ½ in. in width.

Broken Rim.—If the tread, measured from the flange at a point ⅝ in. above the tread, is less than 3¾ in. in width.

Shelled Out.—Wheels with defective treads on account of cracks or shelled out spots 2½ in. or over, or so numerous as to endanger the safety of the wheel.

Brake Burn.—Wheels having defective tread on account of cracks or shelling out due to heating.

Seams one-half inch long or over, at a distance of ½ in. or less from the throat of the flange, or seams 3 in. or more in length, if such seams are within the limits of 3¾ in. from the flange, measured at a point ⅝ in. from the tread.

Worn Flanges.—Wheels on axles with journals 5 in. by 9 in. or over with flanges having flat vertical surfaces extending ⅞ in. or more from the tread, or flanges 1 in. thick or less gaged at a point ⅜ in. above tread. Wheels on axles with journals less than 5 in. by 9 in. with flanges having flat vertical surfaces extending 1 in. or more from the tread, or flanges 15/16 in. thick or less, gaged at a point ⅜ in. above the tread.

Tread Worn Hollow.—If the tread is worn sufficiently hollow to render the flange or rim liable to breakage.

Burst.—If the wheel is cracked from the wheel fit outward.

Cracked tread, cracked plate, or one or more cracked brackets.

Wheels out of gage.

Wheels loose on axle.

NOTE.—The determination of flat spots, worn flanges and broken rims shall be made by a gage as shown in Fig. 8, and its application to defective wheels as shown in Figs. 9, 10, 11, 12 and 13.

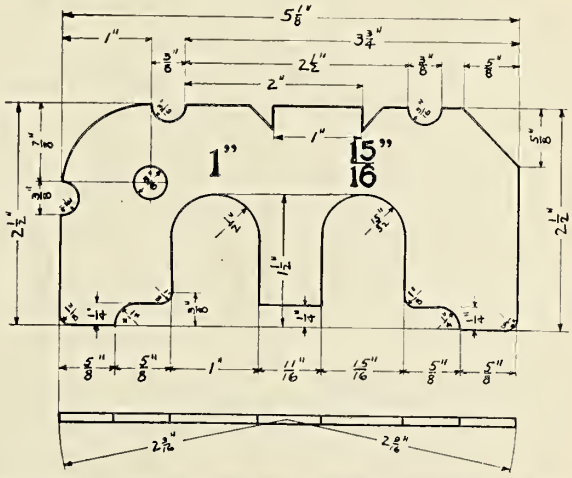

FIG. 8—WHEEL DEFECT GAGE FOR USE IN DETERMINING FLAT SPOTS, WORN FLANGES AND BROKEN RIMS. (SEE RULES 45, 46 AND 50.)

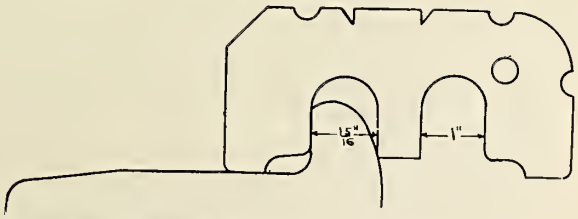

FIG. 9—METHOD OF GAGING WORN FLANGES.

46. *Forged Steel or Steel Tired Wheels.*—Forged steel or steel tired wheels with any of the following defects shall not be continued in service:

Loose wheels; loose, broken or defective retaining rings or tires; broken or cracked hubs, plates, spokes or bolts.

Slid flat spot 2½ in. or longer; or, if there are two or more adjoining spots, each 2 in. or longer.

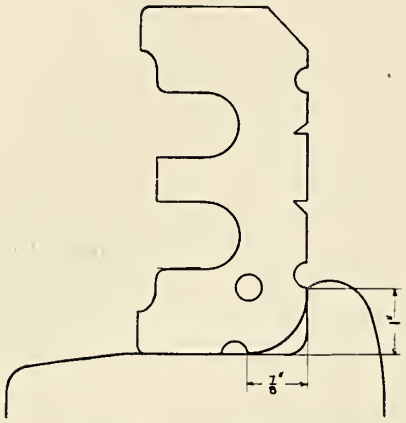

Fig. 10—Method of Gaging Worn Flanges.

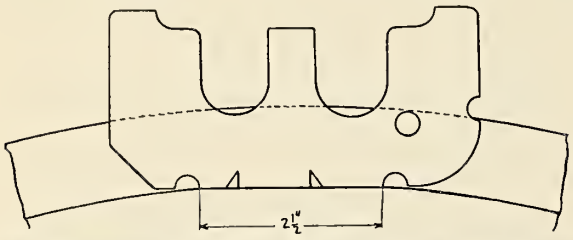

Fig. 11—Method of Gaging Shelled and Flat Spots.

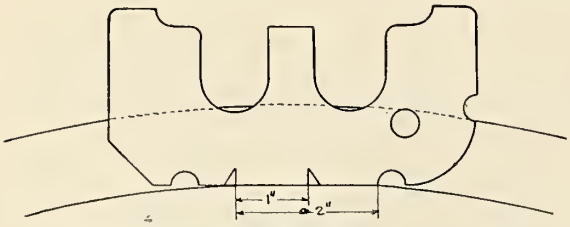

Fig. 12—Method of Measuring Flat Spots of One and Two Inches.

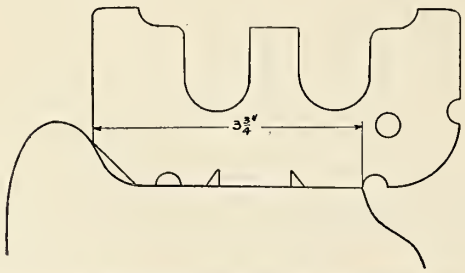

Fig. 13—Method of Gaging Broken Rims.

Defective tread on account of cracks or shelled out spots 2½ in. or longer, or so numerous as to endanger the safety of the wheel.

Broken flange.

Flange worn to 15/16 in. or less in thickness, gaged at a point ⅜ in. above the tread, or having flat vertical surface 1 in. or more from tread; tread worn 5/16 in.; flange more than 1½ in. from tread to top of flange, or thickness of tires or rims less than shown in Figs. 4, 5, 6 and 7.

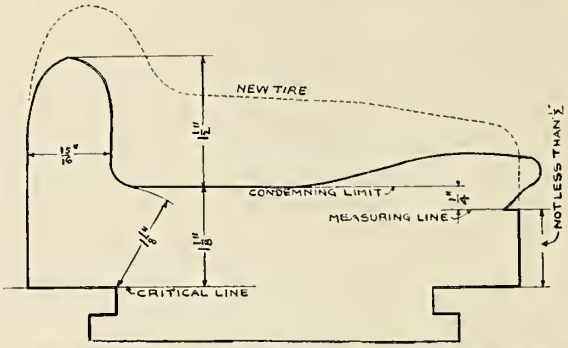

Fig. 4—Minimum Thickness for Steel Tires of Engine and Tender Truck Wheels Having Retaining Ring Fastening. (See Rule 46.)

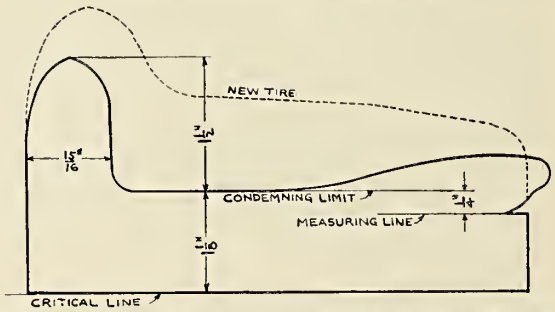

Fig. 5—Minimum Thickness of Steel Tires for Engine and Tender Truck Wheels Having Shrinkage Fastening Only. (See Rule 46.)

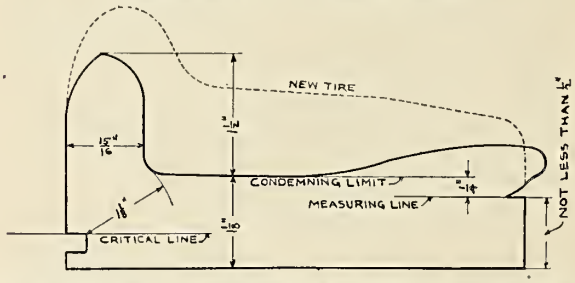

Fig. 6—Minimum Thickness for Steel Tires of Engine and Truck Wheels Having Retaining Ring Fastening. (See Rule 46.)

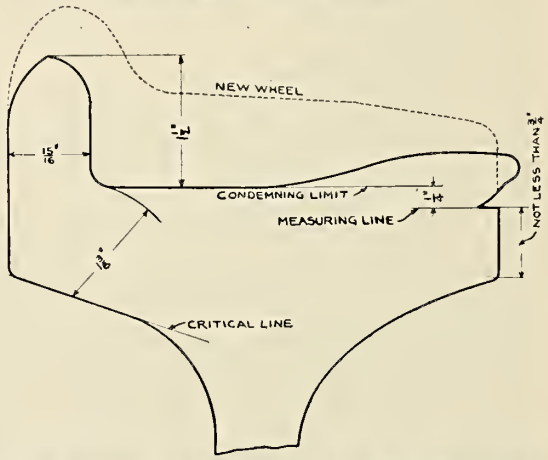

Fig. 7—Minimum Thickness of Rim of Steel Wheels for Engine and Tender Trucks. (See Rule 46.)

47. *Driving and Trailing Wheels.*—Driving and trailing wheel centers with divided rims shall be prop-

erly fitted with iron or steel filling blocks before the tires are applied, and such filling blocks shall be properly maintained. When shims are inserted between the tire and the wheel center, not more than two thicknesses of shims may be used, one of which must extend entirely around the wheel.

48. Driving wheel counterbalance shall be maintained in a safe and suitable condition for service.

49. Driving and trailing wheels with any of the following defects shall not be continued in service:

Driving or trailing wheel centers with three adjacent spokes, or 25 per cent of the spokes in wheel broken.

Loose wheels; loose, broken or defective tires or tire fastenings; broken or cracked hubs, or wheels out of gage.

50. *Driving and Trailing Wheel Tires.*—The minimum height of flange for driving and trailing wheel tires, measured from tread, shall be 1 in. for locomotive used in road service, except for locomotives originally constructed for plain tires, when the minimum height of flange on one pair of wheels may be 7/8 in.

The minimum height of flange for driving wheel tires, measured from tread, shall be 7/8 in. for locomotives used in switching service.

The maximum taper for tread of tires from throat of flange to outside of tire, for driving and trailing wheels for locomotives used in road service, shall be 1/4 in., and for locomotives used in switching service 5/16 in.

The minimum width of tires for driving and trailing wheels of standard gage locomotives shall be 5 1/2 in. for flanged tires, and 6 in. for plain tires.

The minimum width of tires for driving and trailing wheels of narrow gage locomotives shall be 5 in. for flanged tires and 5 1/2 in. for plain tires.

When all tires are turned or new tires applied to driving and trailing wheels, the diameter of the wheels on the same axle, or in the same driving wheel base, shall not vary more than 3/32 in. When a single tire is applied the diameter must not vary more than 3/32 in. from that of the opposite wheel on the same axle. When a single pair of tires is applied the diameter must be within 3/32 in. of the average diameter of the wheels in the driving wheel base to which they are applied.

Driving and trailing wheel tires with any of the following defects shall not be continued in service:

Slid flat spot 2 1/2 in. or more in length; flange 15/16 in. or less in thickness, gaged at a point 3/8 in. above the tread, or having flat vertical surface 1 in. or more from tread; tread worn hollow 5/16 in. on locomotives used in road service, or 3/8 in. on locomotives used in switching service; flange more than 1 1/2 in. from tread to top of flange. (See Figs. 1, 2 and 3.)

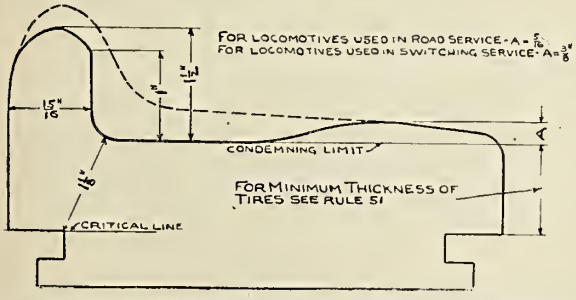

Fig. 1—Minimum Thickness of Steel Tires with Retaining Ring Fastening for Driving and Trailing Wheels.

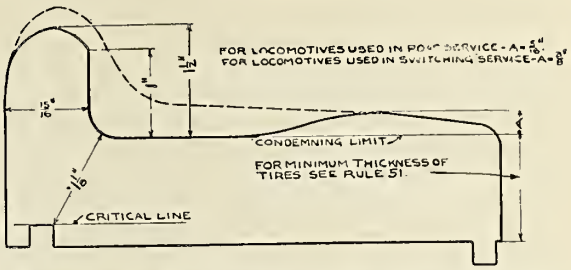

Fig. 2—Minimum Thickness of Steel Tires; Shrinkage Fastening with Shoulder and Retaining Segments for Driving and Trailing Wheels.

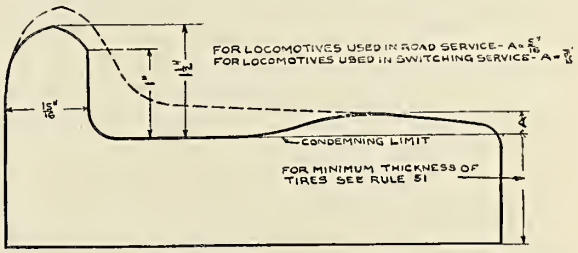

Fig. 3—Steel Tire; Shrinkage Fastening for Driving and Trailing Wheels.

Note.—The determination of flat spots and worn flanges shall be made by a gage as shown in Fig. 8, and its application to defective tires as shown in Figs. 9, 10 and 11.

51. *Minimum thickness for driving wheel and trailer tires on standard and narrow gage locomotives:*

Weight per axle (weight on drivers divided by number of pairs of driving wheels).	Diameter of wheel center.	Minimum thickness, service limits. Road service.	Minimum thickness, service limits. Switching service.
	Inches.		
30,000 pounds and under.....	44 and under....	1 1/4	1 1/8
	Over 44 to 50....	1 5/16	1 3/16
	Over 50 to 56...	1 3/8	1 1/4
	Over 56 to 62...	1 7/16	1 5/16
	Over 62 to 68...	1 1/2	.....
	Over 68 to 74...	1 9/16	.....
	Over 74	1 5/8	.....
Over 30,000 to 35,000 pounds...	44 and under....	1 5/16	1 3/16
	Over 44 to 50...	1 3/8	1 1/4
	Over 50 to 56...	1 7/16	1 5/16
	Over 56 to 62...	1 1/2	1 3/8
	Over 62 to 68...	1 9/16	.....
	Over 68 to 74...	1 5/8	.....
	Over 74.....	1 11/16	.....
Over 35,000 to 40,000 pounds..	44 and under....	1 3/8	1 1/4
	Over 44 to 50...	1 7/16	1 5/16
	Over 50 to 56...	1 1/2	1 3/8
	Over 56 to 62...	1 9/16	1 7/16
	Over 62 to 68...	1 5/8	.....
	Over 68 to 74...	1 11/16	.....
	Over 74.....	1 3/4	.....
Over 40,000 to 45,000 pounds..	44 and under....	1 7/16	1 5/16
	Over 44 to 50...	1 1/2	1 3/8
	Over 50 to 56...	1 9/16	1 7/16
	Over 56 to 62...	1 5/8	1 1/2
	Over 62 to 68...	1 11/16	.....
	Over 68 to 74...	1 3/4	.....
	Over 74.....	1 13/16	.....
Over 45,000 to 50,000 pounds..	44 and under....	1 1/2	1 3/8
	Over 44 to 50...	1 9/16	1 7/8
	Over 50 to 56..	1 5/8	1 1/2
	Over 56 to 62...	1 11/16	1 9/16
	Over 62 to 68...	1 3/4	.....
	Over 68 to 74..	1 13/16	.....
	Over 74.....	1 7/8	.....
Over 50,000 to 55,000 pounds..	44 and under....	1 9/16	1 7/16
	Over 44 to 50....	1 5/8	1 1/2
	Over 50 to 56...	1 11/16	1 9/16
	Over 56 to 62...	1 3/4	1 5/8
	Over 62 to 68...	1 13/16	.....
	Over 68 to 74...	1 7/8	.....
	Over 74	1 15/16	.....
Over 55,000 pounds.....	44 and under....	1 5/8	1 1/2
	Over 44 to 50...	1 11/16	1 9/16
	Over 50 to 56...	1 3/4	1 5/8
	Over 56 to 62...	1 13/16	1 11/16
	Over 62 to 68...	1 7/8	.....
	Over 68 to 74...	1 15/16	.....
	Over 74	2	.....

When retaining rings are used, measurements of tires to be taken from the outside circumference of

the ring, and the minimum thickness of tires may be as much below the limits specified above as the tires extend between the retaining rings, provided it does not reduce the thickness of the tire to less than 1⅛ in. from the throat of flange to the counterbore for the retaining ring.

The minimum thickness for driving wheel tires shall be 1 in. for locomotives operated on track of 2-ft. gage.

TENDERS

52. *Tender Frames.*—Tender frames shall be maintained in a safe and suitable condition for service.

The difference in height between the deck on the tender and the cab floor or deck on the locomotive shall not exceed 1½ in.

must extend into the female center plate not less than ¾ in.

Truck bolsters shall be maintained approximately level.

When tender trucks are equipped with safety chains they shall be maintained in a safe and suitable condition for service.

Side bearings shall be maintained in a safe and suitable condition for service.

Friction side bearings shall not be run in contact.

The maximum clearance of side bearings on rear truck shall be ⅜ in., and if used on front truck ¾ in., when the spread of side bearings is 50 in. When the spread of the side bearings is increased, the maximum clearance may be increased in proportion.

Form No. 1. MONTHLY LOCOMOTIVE INSPECTION AND REPAIR REPORT.

_____, 191

Locomotive {Number_____ Initial_____

_____ *Company.*

In accordance with the act of Congress approved February 17, 1911, as amended March 4, 1915, and the rules and instructions issued in pursuance thereof and approved by the Interstate Commerce Commission, all parts of locomotive No. _____, including the boiler and appurtenances, were inspected on _____, 191 , at _____, and all defects disclosed by said inspection have been repaired, except as noted on the back of this report.

1. Steam gauges tested and left in good condition on _____, 191
2. Safety valves set to pop at _____ pounds, _____ pounds, _____ pounds on ....., 191
3. Were both injectors tested and left in good condition? _____
4. Were steam leaks repaired? _____
5. Condition of brake and signal equipment, _____
6. Condition of draft gear and draw gear, _____
7. Condition of driving gear, _____
8. Condition of running gear, _____
9. Condition of tender, _____

I certify that the above report is correct.

_____, *Inspector.*

10. Was boiler washed and gauge cocks and water glass cock spindles removed and cocks cleaned? _____
11. Were steam leaks repaired? _____
12. Condition of staybolts and crown stays, _____
13. Number of staybolts and crown stays renewed, _____
14. Condition of flues and firebox sheets, _____
15. Condition of arch and water bar tubes, if used, _____
16. Were fusible plugs removed and cleaned? _____
17. Date of previous hydrostatic test, _____, 191
18. Date of removal of caps from flexible staybolts, _____, 191

I certify that the above report is correct.

_____, *Inspector.*

State of _____ } ss:
County of _____ }

Subscribed and sworn to before me this _____ day of _____, 191 , by _____ inspectors of the _____ Company.

_____, *Notary Public.*

The above work has been performed and the report is approved.

_____ *Officer in Charge.*

Form No. 1—Monthly Locomotive Inspection and Repair Report.

The minimum width of the gangway between locomotive and tender, while standing on straight track, shall be 16 in.

53. *Feed Water Tanks.*—Tanks shall be maintained free from leaks, and in safe and suitable condition for service. Suitable screens must be provided for tank wells or tank hose.

Not less frequently than once each month the interior of the tank shall be inspected, and cleaned if necessary.

Top of tender behind fuel space shall be kept clean and means provided to carry off waste water. Suitable covers shall be provided for filling holes.

54. *Oil Tanks.*—The oil tanks on oil burning locomotives shall be maintained free from leaks. An automatic safety cut-out valve, which may be operated by hand from inside and outside of cab, shall be provided for the oil supply pipe.

55. *Tender Trucks.*—Tender truck center plates shall be securely fastened, maintained in a safe and suitable condition for service, and provided with a center pin properly secured. When shims are used between truck center plates, the male center plate

THROTTLE AND REVERSING GEAR

56. *Throttles.*—Throttles shall be maintained in safe and suitable condition for service and efficient means provided to hold the throttle lever in any desired position.

57. *Reversing Gear.*—Reversing gear, reverse levers and quadrants shall be maintained in a safe and suitable condition for service. Reverse lever latch shall be so arranged that it can be easily disengaged and provided with a spring which will keep it firmly seated in quadrant. Proper counterbalance shall be provided for the valve gear.

---

58. Upon application to the chief inspector, modification of these rules, not inconsistent with their purpose, may be made for roads operating less than five locomotives, if an investigation shows that conditions warrant it.

FILING REPORTS

59. *Report of Inspection.*—Not less than once each month and within 10 days after inspection a report of inspection, Form No. 1, size 6 by 9 in., shall be filed with

the United States inspector in charge for each locomotive used by a railroad company; and a copy shall be filed in the office of the chief mechanical officer having charge of the locomotive.

60. A copy of the monthly inspection report, Form No. 1, or annual inspection report, Form No. 3, properly filled out, shall be placed under glass in a conspicuous place in the cab before the locomotive inspected is put into service.

61. Not less than once each year, and within 10 days after required tests have been completed, a report of such tests, showing general condition of the locomotive, shall be submitted on Form No. 3, size 6 by 9 in., and filed with the United States inspector in charge, and a copy shall be filed in the office of the chief mechanical officer having charge of the locomotive. The monthly report will not be required for the month in which this report is filed.

Form No. 3 should be printed on yellow paper.
NOTE.—Samples of Forms Nos. 1 and 3, indicating exact size, color, weight and grade of paper, will be furnished on application.

ACCIDENT REPORTS

62. In the case of an accident resulting from failure, from any cause, of a locomotive or tender, or any appurtenances thereof, resulting in serious injury or death to one or more persons, the carrier owning or operating such locomotive shall immediately transmit by wire to the chief inspector, at his office in Washington, D. C., a report of such accident, stating the nature of the accident, the place at which it occurred, as well as where the locomotive may be inspected, which wire shall be immediately confirmed by mail, giving a full detailed report of such accident, stating, so far as may be known, the causes and giving a complete list of the killed or injured.

NOTE.—Locomotive boilers and their appurtenances will be inspected in accordance with the order of the Commission, dated June 2, 1911.
Safety appliances on locomotives will be inspected in accordance with the order of the Commission, dated March 13, 1911.

Form No. 3. ANNUAL LOCOMOTIVE INSPECTION AND REPAIR REPORT.

....., 191 Locomotive {Number ..... Initial.....

..... *Company.*

In accordance with the act of Congress approved February 17, 1911, as amended March 4, 1915, and the rules and instructions issued in pursuance thereof and approved by the Interstate Commerce Commission, all parts of locomotive No....., including the boiler and its appurtenances, were inspected on ....., 191 , at ....., and all defects disclosed by said inspection have been repaired, except as noted on the back of this report.

1. Date of previous hydrostatic test, ..., 191 .
2. Date of previous removal of caps from flexible stay bolts, ..., 191 .
3. Date of previous removal of flues, ..., 191 .
4. Date of previous removal of all lagging, ..., 191 .
5. Hydrostatic test pressure of ..... pounds was applied.
6. Were caps removed from all flexible staybolts? .....
7. Were all flues removed? ..... Number .....
8. Condition of interior of barrel, ...
9. Was all lagging removed? .....
10. Condition of exterior of barrel, ...
11. Was boiler entered and inspected? .....
12. Was boiler washed? Water glass cocks and gauge cocks cleaned? .....
13. Condition of crown stays and staybolts, ...
14. Condition of sling stays and crown bars, ...
15. Condition of firebox sheets and flues, ...
16. Condition of arch tubes, ... Water-bar tubes, ...
17. Condition of throat braces, ...
18. Condition of back head braces, ...
19. Condition of front flue sheet braces, ...
20. Were fusible plugs removed and cleaned? .....
21. Were steam leaks repaired? .....

I certify that the above report is correct.

....., *Inspector.*

22. Were steam gauges tested and left in good condition? .....
23. Safety valves set to pop at ..... pounds, ... pounds, ... pounds.
24. Were both injectors tested and left in good condition? .....
25. Were steam leaks repaired? .....
26. Hydrostatic test of ..... pounds applied to main reservoirs.
27. Condition of brake and signal equipment, ...
28. Were drawbar and drawbar pins removed and inspected? .....
29. Condition of draft gear and draw gear, ...
30. Condition of driving gear, ...
31. Condition of running gear, ...
32. Condition of tender, ...

I certify that the above report is correct.

....., *Inspector.*

STATE OF .....} ss:
COUNTY OF.....}

Subscribed and sworn to before me this ..... day of ....., 191 , by ....., inspectors of the .....Company.

....., *Notary Public.*

The above work has been performed and the report is approved.

....., *Officer in charge.*

FORM NO. 3—ANNUAL LOCOMOTIVE INSPECTION AND REPAIR REPORT.

Locomotive Performance. At the Master Mechanics' convention of 1896 the following resolution was carried:

"Resolved, That it is the sense of this Association that the statement of the performance of locomotives should be made on the basis of train load, in lieu of train miles or loaded car miles, as is the prevailing practice at present." (See page 333, report 1896.)

Locomotives, Shipping. At the Master Mechanics' convention in 1901 the following resolution was carried:

"Resolved, That it is the sense of this Association that it is necessary that the side rods should be on engines traveling from the works to the railroad they are built for." (See page 99, report 1901.)

Locomotive Statistics. At the Master Mechanics' convention of 1899 the following resolution was carried:

"Resolved, That it is the sense of this Association that the ton-mile basis for motive power statistics is the most practical, and encourages economical methods of operating; and that it is desirable that the heads of motive power departments urge its adoption on their management." (See page 173, report 1899.)

At the convention of 1901 the following resolutions prevailed:

"Resolved, That it is the sense of this Association that a strict comparison of motive power statistics, one road with another will not secure the best results, but that such comparisons should be made with the records of the same divisions for preceding periods of time." (See page 79, report 1901.) (See modification, page 70, 1902, report.)

"Resolved, That it is the sense of this Association that the ton-mileage of the locomotive is a just credit to the motive power department for statistical purposes." (See page 83, report 1901.) (See modification, page 77, 1902, report.)

At the convention of 1902 the following resolutions prevailed:

"Resolved, That it is the sense of this Association that conclusions based on a comparison of the statistics of one railroad with another may easily prove incorrect, should be given less weight than they usually are, are just only when the accompanying conditions are fairly well known and their influence can be determined with some degree of accuracy; that a comparison of the statistics of a division or a system with those of the same territory for a previous corresponding period very largely eliminates these uncertainties and makes conclusions based on such a comparison much more reliable.

"Resolved, That it is the sense of this Association that the ton-mileage of the locomotive and caboose is a just credit to the motive power department for statistical purposes.

"Resolved, That the ton-mile is the best practical basis now available for motive power and operating statistics by which to judge the efficiency of locomotive and train service.

"Resolved, That actual tonnage should be used in computing ton-mile statistics for comparison with those of other roads, but for comparison with the previous records of the same system or division the use of adjusted tonnage is advisable.

"Resolved, That the statistics of passenger, freight, work train and switching services should be on the ton-mile basis, each service in a separate group, and passenger and freight service to be each further grouped under Through and Local.

"Resolved, That the statistics of branch lines and main lines should be kept separately.

"Resolved, That the credit of ton-mileage for locomotives in switching service should be proportional to their tractive power.

"Resolved, That the ton-mileage of trains using more than one locomotive should be divided among the locomotives attached to these trains in proportion to their tractive power and for the distance over which the helping locomotives are used.

"Resolved, That the tonnage of the locomotive should be its weight in working order, plus the light weight of the tender and half its capacity of coal and water."

Locomotive Tests.—In 1894 a method of conducting tests of locomotives was adopted as standard by the American Railway Master Mechanics' Association. This was completely revised in 1914 and is as follows:

Laboratory Tests

OBJECT

The object of a laboratory test is to determine the steam and coal consumption per unit of power when the locomotive is operated under fixed conditions.

PREPARATIONS

1. All driving wheels should be turned to the same diameter and should be standard contour.
2. Each pair of driving wheels should be checked to see that they are correctly quartered for the crank pins.
3. If the locomotive selected has ever been through the shops for general repairs, the frames should be tried to see that they line with the cylinders.
4. The boiler tubes must be new or newly pieced, so as to be free from boiler sediment.
5. The steam cylinders should be approximately the same diameter and as near to that called for as standard for the class of locomotive, as practicable, and they should be bored if not in good condition. The piston packing rings should be in good condition.
6. On "D" valve type of locomotive the valves and seats should be faced, and on piston valve type old bushings should be bored if not in good condition, or new bushings applied.
7. Piston valve packing rings should be examined and in good condition, after which a test pressure of at least 60 pounds should be applied to the steam pipes to determine that the throttle, steam pipes and exhaust passage are tight.
8. The front end arrangement for the locomotive should be carefully gone over and checked with the print in accordance with which the front end is supposed to have been applied.
9. The stack and draft pipe should be lined to determine that they are properly erected with reference to the exhaust nozzle.
10. Steam joints in the injector and delivery pipes should be tested to determine that they are steam tight.
11. The lift of the throttle valve should be determined for each live notch on the throttle lever quadrant. When necessary, the cut-off should be taken for each notch on the reverse-lever rack.
12. The locomotive selected should reach the Locomotive Testing Laboratory at least four days prior to the time when it is scheduled to go under test, in order to permit the application of all instruments and to take the necessary measurements of various parts of the locomotive.

FUEL

For efficiency tests of locomotives, a standard coal should be selected that can be easily obtained on short notice, and in accordance with the special object in view. If maximum efficiency or capacity is desired, the coal should preferably be some kind that is regarded as a standard for the locality where the locomotive is operated.

When oil fuel is used, the rule governing the tests may be modified to conform to the characteristics of liquid fuel.

APPARATUS AND INSTRUMENTS

The apparatus and instruments required for laboratory tests of a locomotive are as follows:

1. Platform scale for weighing coal and ash.
2. Tanks and scales for weighing water.
3. Graduated scale attached to water glass.
4. Pressure gages graduated to at least pounds for boiler, branch pipe, receiver, exhaust and at other points as is required.
5. Draft gages for smokebox, firebox and ashpan.
6. Thermometers for calorimeter, branch pipe, receiver and exhaust.
7. Pyrometers for firebox, smokebox and at other points as is required.
8. Steam calorimeter.
9. Steam cylinder indicators.
10. Some form of speed recorded to denote the revolutions of driving wheels.
11. Gas analysis apparatus.
12. Friction brake apparatus.
13. Dynamometer for determining the pull at drawbar.
14. Some form of indicator rigging.

In addition to the above, it will be necessary to have planimeters, micrometers, scales, calculating instruments, etc.

A calibration should be made by water glass method

of both safety valves and a correction made during a test.

The scales, gages, thermometers and pyrometers should be carefully calibrated at specified intervals.

APPLICATION OF INSTRUMENTS

The pressure gages for boiler, branch pipe and exhaust should be connected with a long siphon and located at convenient points for the observers. Care should be taken to make correction for pressure should the gage be located so that the water head would affect the reading.

For taking temperature of steam in branch pipe and exhaust passage, thermometers should be inserted into wells, and given proper depth of immersion.

The indicator reducing motion should be some form of pendulum type with light tube for transmitting the reduced motion to a point near the indicator. The pipes leading from the cylinder to the indicator should be not less than ½ inch inside diameter, and they should connect into the side of the cylinder rather than into the heads, thus making a very short connection. Short bends in the pipes should be avoided and they should be well lagged to prevent radiation.

A light framework should be secured to the cylinder to act as a brace for the indicators, and for the motion-rod supports. Absolute rigidity is highly essential in this particular.

Care should also be taken to set the indicators in such a position that the finger on the end of the motion

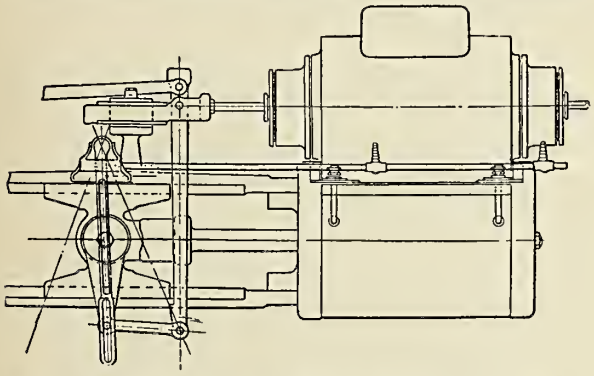

Fig. 1.—Indicator Reducing Motion for Laboratory Tests

rod travels in a direction pointing to the groove in the drum proper. See Fig. 1.

Draft gages consisting of "U" tubes properly graduated in inches, containing water, should be placed at convenient locations, and connected at the smokebox or any other point at which the draft is taken, with a ¼-inch pipe. A rubber tube connection should be provided to connect the draft pipe with the "U" tube. In the smokebox the pipes should be located at the horizontal center line of boiler in front and back of diaphragm, with the end drilled in accordance with Fig. 2 at the vertical center line of the boiler.

The draft in the firebox should be taken through a drilled stay bolt, located at a point about half the length of the firebox and about 24 inches above the grates. The draft in the ashpan should be taken at some convenient point at about the center of the entire grate area.

The smokebox pyrometer or thermometer should be inserted so that the hot point or bulb is below the tip of the exhaust nozzle and in front of the table plate. If a thermometer is used for this purpose it should be graduated to 1,000 degrees.

The tube placed in the firebox for inserting the pyrometer should be located opposite the stay bolt drilled for the draft. This tube should be a piece of two-inch boiler tube and located on the center line of a stay bolt.

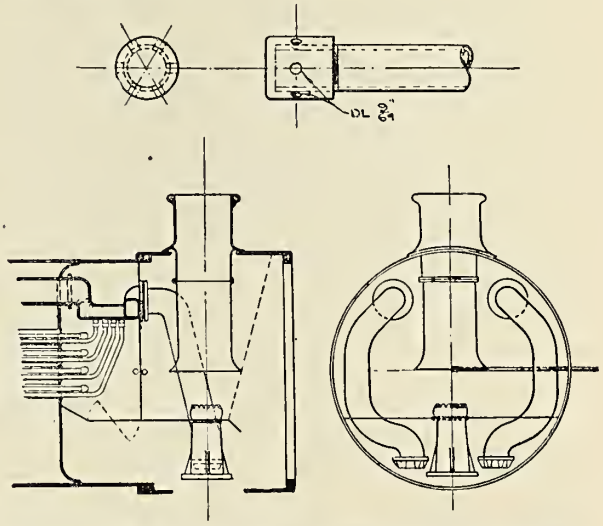

Fig. 2.—Location of Draft Pipes, Front and Back of Diaphragm

The gas sampling pipe should be located at the smallest area under the draft plate, and in the center of this area. This pipe should have numerous drilled holes equally spaced and the total area of the holes should not be more than the inside area of the sampling pipe as shown in Fig. 3.

A steam calorimeter should be attached either at the dome at a point close to the throttle valve, or to the branch pipe according as it is desired to obtain the quality of the steam at one point or the other. The former location is preferred. A perforated ½-inch

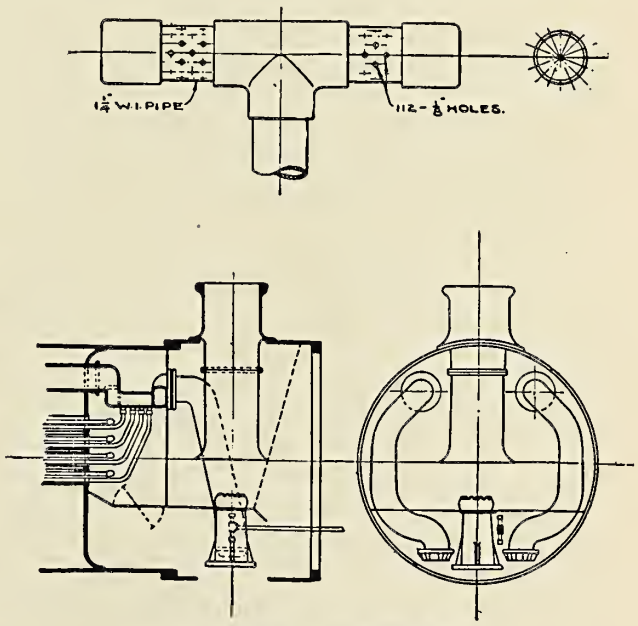

Fig. 3.—Location of Gas Sampling Pipe

pipe should be used for sampling and conveying the steam to the calorimeter as shown in Fig. 4.

OPERATING CONDITIONS

In a laboratory test where maximum efficiency is the object in view, there should be uniformity in such

matters as steam pressure, quantity of coal supplied at each firing, thickness of fire, and in other firing operations.

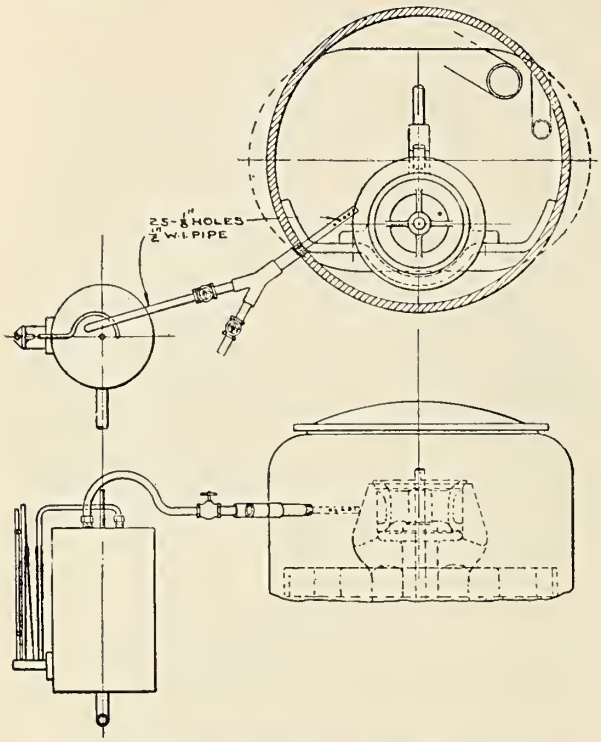

Fig. 4.—Location of Sampling Pipe for Steam Calorimeter

The rate of supplying the feed-water should be uniform through the entire test, and a certain level (about second gage cock), should be maintained from start to finish of test.

DURATION

The duration of a laboratory test of a locomotive will depend upon the character of the fuel used, rate of combustion and working limitations of the revolving parts. The test should preferably be continued until at least 25 pounds equivalent evaporation of water per square foot of heating surface have been obtained. If from the graphical log the coal and water performances are uniform, tests of three hours will be the limit.

STARTING AND STOPPING

The fire having been thoroughly cleaned and banked when necessary to permit coking, previous to starting the test, the bank should be broken up and fresh fuel supplied. The locomotive should be started and run at the speed of the test a sufficient length of time to build up a level fire, and which should be, as near as possible, so maintained throughout the test. When all conditions of fire and speed have become uniform, the thickness of the fire should be noted, but the starting signal for the beginning of the test proper should not be given until the locomotive has been run at least 10 minutes. Observe the steam pressure and time, and record the latter as the starting time of test. Water level should be maintained uniformly throughout the test. The ashpan should be cleaned at the starting signal. When the end of the test approaches, the fire having been kept at a uniform thickness during the run, the time and water level should be noted and the test stopped. When the test is completed the ashpan should be cleaned and cinders, if any, should be removed from the smokebox.

RECORDS

A log of the data should be entered on printed forms and records taken at 10-minute intervals, unless a special test is in progress, when the readings may be taken more frequently. The coal should be weighed out in not less than 300-pound lots and the time taken for each lot burned.

Weighing tanks of sufficient capacity should be provided to maintain water in the supply, varying in head not more than six inches, and readings of the water used should be plotted upon the graphical logs at convenient regular intervals.

Indicator diagrams should be taken at the same periods the other data are taken.

A sufficient number of observers should be supplied in order that all important observations should be taken simultaneously.

At a laboratory where two tests are made each day the number of men required is as follows:

	Number of Men
Foreman of testing laboratory	1
Assistant foreman of testing laboratory	1
Stenographer	1
Chemist	1
Computers	7
Brake wheel operator	1
Dynamometer observer	1
Smoke observer	1
Cab and coal observer	1
Temperature and pressures	1
Speed, boiler pressure, drafts and pyrometers	1
Water observer	1
Indicator observers	2
Gas sampler	1
Oilers	2
Engine operator	1
Firemen	2
Draftsmen	3
Coal passers and janitors	3
Total	32

The force would have to be increased should a Mallet type of locomotive be tested.

All observers, operators, oilers and firemen should assist in dismantling and fitting up laboratory when locomotives are changed.

ASH AND REFUSE

Ash and all the refuse withdrawn from the ashpan and smokebox at the end of the test should be weighed in a dry state, and, if desired, sample taken for analysis of heating value and unburned carbon.

SAMPLING COAL

If the coal to be tried is more than the amount necessary to make the test, it should be sampled according to the recommendations of the committee of the American Chemical Society governing carload sampling, which are as follows: Six shovelfuls should be taken along each side and six across the center of the car. If the car is to be unloaded into bins, a small amount of coal should be taken off the conveyor buckets or wagons while the entire car is being unloaded. In all events the sample should not be less than 300 pounds, and after it is crushed and quartered about one quart should be taken and placed in an air-tight jar for chemical analysis.

On all tests the total moisture should be used in the calculations.

CALORIFIC TESTS OF COAL

The analyses commonly made are what are termed "proximate" analyses; these consist in the determination of the following items:

Fixed carbon, per cent.
Volatile matter, per cent.
Moisture hydroscopic, per cent.
Moisture total, per cent.
Ash, per cent.
Sulphur separately, per cent.
B. t. u. per pound of fuel.

For complete determinations of the quality of coal, it is necessary to make an ultimate analysis, which requires the determination of the following additional items:

Carbon, per cent.
Hydrogen, per cent.
Nitrogen, per cent.
Oxygen by difference, per cent.

DATA AND RESULTS

The data and results should be reported on forms in accordance with items given herewith.

DESCRIPTION, DIMENSIONS AND PROPORTIONS

DRIVING WHEELS

1. Number of pairs.....
2. Nominal diameter, inches.....
3. Measured circumference, feet, right No. 1.....
4. Measured circumference, feet, right No. 2.....
5. Measured circumference, feet, right No. 3.....
6. Measured circumference, feet, right No. 4.....
7. Measured circumference, feet, right No. 5.....
8. Measured circumference, feet, right No. 6.....
9. Measured circumference, feet, right No. 7.....
10. Measured circumference, feet, right No. 8.....
11. Measured circumference, feet, left No. 1.....
12. Measured circumfrence, feet, left No. 2.....
13. Measured circumference, feet, left No. 3.....
14. Measured circumference, feet, left No. 4.....
15. Measured circumference, feet, left No. 5.....
16. Measured circumference, feet, left No. 6.....
17. Measured circumference, feet, left No. 7.....
18. Measured circumference, feet, left No. 8.....
19. Average circumference, feet.....
20. Average diameter, inches.....

ENGINE TRUCK WHEELS

26. Number .....
27. Diameter, inches.....

TRAILING WHEELS

33. Diameter, inches.....

WHEEL BASE

39. Driving wheel base, front locomotive, in feet.....
40. Driving wheel base, rear locomotive, in feet.....
41. Total wheel base in feet.....
42. Gage of wheels in inches.....

WEIGHT OF ENGINE, POUNDS

(With water at second gage cock and normal fire.)

48. On truck .....
49. On first drivers.....
50. On second drivers.....
51. On third drivers.....
52. On fourth drivers.....
53. On fifth drivers.....
54. On sixth drivers.....
55. On seventh drivers.....
56. On eighth drivers.....
57. On trailers .....
63. Total .....
64. Total on drivers.....

CYLINDERS

65. High pressure, number.....
66. Low pressure, number.....
67. Arrangement .....
68. Diameter, inches, high pressure, right.....
69. Diameter, inches, high pressure, left.....
70. Diameter, inches, low pressure, right.....
71. Diameter, inches, low pressure, left.....

STROKE OF PISTON, INCHES

77. High pressure, right.....
78. High pressure, left.....
79. Low pressure, right.....
80. Low pressure, left.....

CLEARANCE, PER CENT OF PISTON DISPLACEMENT

86. High pressure, right, head end.....
87. High pressure, right, crank end.....
88. High pressure, left, head end.....
89. High pressure, left, crank end.....
90. Low pressure, right, head end.....
91. Low pressure, right, crank end.....
92. Low pressure, left, head end.....
93. Low pressure, left, crank end.....

RECEIVER, CUBIC FEET

99. Volume, right side.....
100. Volume, left side.....

STEAM PORTS, INCHES

(For piston valves, the length equals the circumference of inside of bushing, minus the sum of the widths of bridges.)

106. High-pressure admission, right, head end, length.....
107. High-pressure admission, right head end, width.....
108. High-pressure admission, right, crank end, length.....
109. High-pressure admission, right, crank end, width.....
110. High-pressure admission, left, head end, length.....
111. High-pressure admission, left, head end, width.....
112. High-pressure admission, left, crank end, length.....
113. High-pressure admission, left, crank end, width.....
114. Low-pressure admission, right, head end, length.....
115. Low-pressure admission, right, head end, width.....
116. Low pressure admission, right, crank end, length.....
117. Low-pressure admission, right, crank end, width.....
118. Low-pressure admission, left, head end, length.....
119. Low-pressure admission, left, head end, width.....
120. Low-pressure admission, left, crank end, length.....
121. Low-pressure admission, left, crank end, width.....
122. High-pressure exhaust, right, length.....
123. High-pressure exhaust, right, width.....
124. High-pressure exhaust, left, length.....
125. High-pressure exhaust, left, width.....
126. Low-pressure exhaust, right, length.....
127. Low-pressure exhaust, right, width.....
128. Low-pressure exhaust, left, length.....
129. Low-pressure exhaust, left, width.....

PISTON RODS, DIAMETER, INCHES

135. High pressure, right.....
136. High pressure, left.....
137. Low pressure, right.....
138. Low pressure, left.....

TAIL RODS, DIAMETER, INCHES

144. High pressure, right.....
145. High pressure, left.....
146. Low pressure, right.....
147. Low pressure, left.....

VALVES

153. Type .....
154. Design .....
155. Balanced area in per cent of total.....
156. Type of valve motion.....

GREATEST VALVE TRAVEL, INCHES

162. High pressure, right.....
163. High pressure, left.....
164. Low pressure, right.....
165. Low pressure, left.....

STEAM LAP OF VALVE, INCHES

171. High pressure, right, head end.....
172. High pressure, right, crank end.....
173. High pressure, left, head end.....
174. High pressure, left, crank end.....
175. Low pressure, right, head end.....
176. Low pressure, right, crank end.....
177. Low pressure, left, head end.....
178. Low pressure, left, crank end.....

EXHAUST LAP OF VALVE, INCHES

184. High pressure, right, head end.....
185. High pressure, right, crank end.....
186. High pressure, left, head end.....
187. High pressure, left, crank end.....
188. Low pressure, right, head end.....
189. Low pressure, right, crank end.....
190. Low pressure, left, head end.....
191. Low pressure, left, crank end.....

MISCELLANEOUS

197. Cylinder lagging material.....
198. Cylinder jacket material.....

BOILER

204. Type .....
205. Outside diameter, first ring, inches.....

TUBES

211. Number .....
212. Outside diameter, inches.....
213. Thickness, inches.....
214. Length between tube sheets, inches.....
215. Total fire area, square feet.....
216. Serve tubes, number of ribs.....
217. Serve tubes, sq. in. of inside surface in 1 in. of length..
218. Number of arch tubes.....
219. Outside diameter, inches.....
220. Total fire area of arch tubes, square feet.....

SUPERHEATER

223. Type .....
224. Number of tubes.....
225. Outside diameter, inches.....
226. Inside diameter, inches.....
227. Length of tubes, inches.....
228. Steam area through units, square in.....

FIREBOX, INSIDE

234. Length .....inches.....
235. Width .....inches.....
236. Depth front end.....inches.....
237. Depth back end.....inches.....
238. Volume .....cubic feet.....

FIRE DOORS

244. Number .....
245. Area, square feet.....
246. Hand or automatic operated.....

GRATES

251. Style .....
252. Total area, square feet.....
253. Total area dead grates, square feet.....
254. Width of air space, inches.....
255. Width of grates, inches.....
256. Length of grates, inches.....

AIR INLETS

260. Through firebox sides.....square feet
261. Through grates.....square feet
262. Through fire door.....square feet
263. Total air inlets, No. 260, No. 261 and No. 262, ...square feet
264. Ratio air inlets (No. 261) to grate area (No. 252).....
265. Ratio air inlets (No. 263) to grate are (No. 252).....

HEATING SURFACE, SQUARE FEET

271. Of the tubes, water side.....
272. Of the tubes, fire side.....
273. Of firebox, fire side.....
274. Of superheater, fire side.....
275. Total based on inside of firebox, fire side of water and superheater tubes, arch pipes and superheater, sq. ft..
276. Total based on inside of firebox, water side of water and superheater tubes, arch pipes and fire side of superheater, square feet.....

BOILER VOLUMES

(With water surface at level of second gage cock.)

282. Water space, cubic feet.....
283. Steam space, cubic feet.....

EXHAUST NOZZLE

289. Type .....
290. Dimensions of right side, inches.....
291. Dimensions of left side, inches.....
292. Area of right side, square inches.....
293. Area of left side, square inches.
294. Total area.....

REVERSE LEVER

300. High-pressure cylinder, notches forward of center.....
301. Low-pressure cylinder, notches forward of center.....

RATIO

307. Heating surface (No. 275) to grate area (No. 252).....
308. Fire area through tubes (No. 215) to grate area (No. 252) .....
309. Firebox heating surface (No. 273) to grate area (No. 252) .....
310. Tube surface (No. 27) to firebox heating surface (No. 273) .....
311. Firebox volume (No. 238) to grate area (No. 252).....
312. Superheater, length of units (No. 227) to internal diameter (No. 226).....

CONSTANTS

318. For dynamometer horse-power (power developed when the speed is one r.p.m. and the pull is one pound).....
For indicated horse-power (power developed at one r.p.m. and one pound m.e.p.)
319. High-pressure cylinder, right, head end.....
320. High-pressure cylinder, right, crank end.....
321. High-pressure cylinder, left, head end.....
322. High-pressure cylinder, left, crank end.....
323. Low-pressure cylinder, right, head end.....
324. Low-pressure cylinder, right, crank end.....
325. Low-pressure cylinder, left, head end.....
326. Low-pressure cylinder, left, crank end.....

FOR PISTON DISPLACEMENT, CUBIC FEET

332. High-pressure cylinder, right, head end.....
333. High-pressure cylinder, right, crank end.....
334. High-pressure cylinder, left, head end.....
335. High-pressure cylinder, left, crank end.....
336. Low-pressure cylinder, right, head end.....
337. Low-pressure cylinder, right, crank end.....
338. Low-pressure cylinder, left, head end.....
339. Low-pressure cylinder, left, crank end.....

OBSERVED DATA

345. Duration of test, hours.....
346. Hand or stoker fired.....
351. Total revolutions .....
352. Average.....Per minute.....
353. Equivalent speed in miles per hour.....
354. Equivalent piston speed in feet per minute.....

POSITION OF LEVERS

360. Reverse lever notches from front end.....
363. Throttle lever.....

TEMPERATURE, DEGREES FAHRENHEIT

366. Of smokebox, by thermometer.....
367. Of smokebox, by pyrometer.....
368. Of laboratory, dry bulb.....
369. Of laboratory, wet bulb.....
370. Of steam in branch pipe.....
371. Of steam in receiver.....
372. Of steam in exhaust passage.....
373. Of feed-water .....
374. Of firebox, by pyrometer.....

PRESSURE, POUNDS PER SQUARE INCH

380. In boiler, average.....
381. In boiler, maximum .....
382. In boiler, minimum.....
383. In branch pipe.....
384. In H. P. cylinder.....
385. In L. P. cylinder.....
386. In receiver .....
387. In exhaust passage.....
388. In laboratory, barometric.....

DRAFT, INCHES OF WATER

394. In smokebox, front of diaphragm.....
395. In smokebox, back of diaphragm.....
396. In firebox .....
397. In ashpan .....

INJECTORS

Hours in action

403. Total right.....
404. Total left.....
405. Number times on right.....
406. Number times on left.....

QUALITY OF STEAM

407. In dome .....
408. In branch pipe.....
409. Degrees of superheat in branch pipe.....
410. Degrees of superheat in receiver.....
411. Degrees of superheat in exhaust.....
412. Factor of correction for quality of steam.....

COAL, SPARKS AND ASH

417. Coal fired, kind.....
418. Coal fired, total.....
419. Dry coal fired, total.....pounds.....
420. Combustible, by analysis, total.....
421. Ash, by analysis, total.....
422. Cinders collected in smokebox, total.....
423. Sparks discharged from stack, total.....
424. Cinders and sparks, total.....
425. Coal loss due to steam loss, pounds per hour.....
426. Spark loss, per cent of total coal fired.....

SMOKE

431. Ringelmann chart, per cent.....

ANALYSIS OF COAL (PROXIMATE)

437. Fixed carbon.....per cent.....
438. Volatile matter.....per cent.....
439. Moisture, hydroscopic.....per cent.....
440. Moisture, total.....per cent.....
441. Ash .....per cent.....
442. Sulphur, determined separately.....per cent.....
443. B. t. u. per pound of fuel.....

ANALYSIS OF COAL (ULTIMATE)

449. Carbon per cent.....
450. Hydrogen, per cent.....
451. Nitrogen, per cent.....
441. Ash, per cent.....
442. Sulphur, per cent.....
452. Oxygen by difference, per cent.....

CALORIFIC VALUE IN B. T. U. PER POUND

458. Of dry coal.....
459. Of combustible .....
460. Of cinders and sparks.....

ANALYSIS OF SMOKEBOX GASES

466. Oxygen—O .....per cent.....
467. Carbon monoxide—CO.....per cent.....
468. Carbon dioxide—CO_2.....per cent.....
469. Nitrogen—N .....per cent.....
470. Hydrogen—H .....per cent.....

WATER IN POUNDS

476. Delivered to injectors.....
477. Lost, from boilers.....
478. Lost, from.....
479. Lost, from.....
480. Lost, total.....
481. Delivered to boiler and presumably evaporated.....

DYNAMOMETER

Pull in Pounds

487. Average .....
488. Maximum .....
489. Minimum .....

CUT-OFF, PER CENT OF STROKE

495. High-pressure cylinder, right, head end.....
496. High-pressure cylinder, right, crank end.....
497. High-pressure cylinder, left, head end.....
498. High-pressure cylinder, left, crank end.....
499. Average .....
500. Low-pressure cylinder, right, head end.....
501. Low-pressure cylinder, right, crank end.....
502. Low-pressure cylinder, left, head end.....
503. Low-pressure cylinder, left, crank end.....
504. Average .....

RELEASE, PER CENT OF STROKE

510. High-pressure cylinder, right, head end.....
511. High-pressure cylinder, right, crank end.....
512. High-pressure cylinder, left, head end.....
513. High-pressure cylinder, left, crank end.....
514. Average .....
515. Low-pressure cylinder, right, head end.....
516. Low-pressure cylinder, right, crank end.....
517. Low-pressure cylinder, left, head end.....
518. Low-pressure cylinder, left, crank end.....
519. Average .....

BEGINNING OF COMPRESSION, PER CENT OF STROKE

525. High-pressure cylinder, right, head end.....
526. High-pressure cylinder, right, crank end.....
527. High-pressure cylinder, left, head end.....
528. High-pressure cylinder, left, crank end.....
529. Average .....
530. Low-pressure cylinder, right, head end.....
531. Low-pressure cylinder, right, crank end.....
532. Low-pressure cylinder, left, hand end.....
533. Low-pressure cylinder, left, crank end.....
534. Average .....

Pressure from Indicator Cards

INITIAL PRESSURE, POUNDS PER SQUARE INCH

540. High-pressure cylinder, right, head end.....
541. High-pressure cylinder, right, crank end.....
542. High-pressure cylinder, left, head end.....
543. High-pressure cylinder, left, crank end.....
544. Average .....
545. Low-pressure cylinder, right, head end.....
546. Low-pressure cylinder, right, crank end.....
547. Low-pressure cylinder, left, head end.....
548. Low-pressure cylinder, left, crank end.....
549. Average .....

STEAM-CHEST PRESSURE, POUNDS PER SQUARE INCH

555. High pressure, right side.....
556. High pressure, left side.....
557. Average .....
558. Low pressure, right side.....
559. Low pressure, left side.....
560. Average .....

PRESSURE AT RELEASE, POUNDS PER SQUARE INCH

566. High-pressure cylinder, right, head end.....
567. High-pressure cylinder, right, crank end.....
568. High-pressure cylinder, left, head end.....
569. High-pressure cylinder, left, crank end.....
570. Average .....
571. Low-pressure cylinder, right, head end.....
572. Low-pressure cylinder, right, crank end.....
573. Low-pressure cylinder, left, head end.....
574. Low-pressure cylinder, left, crank end.....
575. Average .....

PRESSURE AT RELEASE, POUNDS PER SQUARE INCH

581. High-pressure cylinder, right, head end.....
582. High-pressure cylinder, right, crank end.....
583. High-pressure cylinder, left, head end.....
584. High-pressure cylinder, left, crank end.....
585. Average .....
586. Low-pressure cylinder, right, head end.....
587. Low-pressure cylinder, right, crank end.....
588. Low-pressure cylinder, left, head end.....
589. Low-pressure cylinder, left, crank end.....
590. Average .....

PRESSURE AT BEGINNING OF COMPRESSION, POUNDS PER SQUARE INCH

596. High-pressure cylinder, right, head end.....
597. High-pressure cylinder, right, crank end.....
598. High-pressure cylinder, left, head end.....
599. High-pressure cylinder, left, crank end.....
600. Average .....
601. Low-pressure cylinder, right, head end.....
602. Low-pressure cylinder, right, crank end.....
603. Low-pressure cylinder, left, head end.....
604. Low-pressure cylinder, left, crank end.....
605. Average .....

LEAST BACK PRESSURE, POUNDS PER SQUARE INCH

611. High-pressure cylinder, right, head end.....
612. High-pressure cylinder, right, crank end.....
613. High-pressure cylinder, left, head end.....
614. High-pressure cylinder, left, crank end.....
615. Average .....
616. Low-pressure cylinder, right, head end.....
617. Low-pressure cylinder, right, crank end.....
618. Low-pressure cylinder, left, head end.....
619. Low-pressure cylinder, left, crank end.....
620. Average .....

Summary of Average Results

BOILER

626. Dry coal fired, per hour.....pounds.....
627. Dry coal fired, per hour per sq. ft. of grate surface, pounds .....

EVAPORATION, POUNDS

633. Moist steam, per hour.....
634. Dry steam, per hour.....
635. Dry steam, per hour, per sq. ft. of heating surface.....
636. Dry steam, per pound of dry coal.....
637. Dry steam, per pound of fuel as fired.....
637. Dry steam, per pound of fuel as fired.....
638. Water loss—calorimeter, safety valves, stoker engine, jets, etc., pound per hour.....
639. Dry steam to engines per hour.....
640. Factor of evaporation.....

EQUIVALENT EVAPORATION FROM AND AT 212° F.

645. Per hour.....
646. Per hour, boiler, excluding superheater.....
647. Per hour, superheater alone.....
648. Per hour, per sq. ft. of total fire heating surface.....
649. Per hour, per sq. ft. of total heating surface, excluding superheater .....
655. Per hour, per sq. ft. of total heating surface, superheater alone .....
656. Per hour, per sq. ft. of grate area.....
657. Per pound of coal as fired.....
658. Per pound of dry coal.....
659. Per pound of combustible.....
660. Boiler horse-power.....
666. Efficiency of boiler, based on fuel.....
667. Efficiency of boiler per sq. ft. of heating surface.....
668. Efficiency of boiler per sq. ft. of grate surface.....

Summary of Average Results, Engine

MEAN, EFFECTIVE PRESSURE, POUNDS PER SQUARE INCH

674. High-pressure cylinder, right, head end.....
675. High-pressure cylinder, right, crank end.....
676. High-pressure cylinder, left, head end.....
677. High-pressure cylinder, left, crank end.....
678. Average .....
679. Low-pressure cylinder, right, head end.....
680. Low-pressure cylinder, right, crank end.....
681. Low-pressure cylinder, left, head end.....
682. Low-pressure cylinder, left, crank end.....
683. Average .....

RECEIVER

689. Pressure, right side.....
690. Pressure, left side.....
691. Average .....

NUMBER OF EXPANSIONS

697. Right side, head end.....
698. Right side, crank end.....
699. Left side, head end.....
700. Left side, crank end.....
701. Total .....

INDICATED HORSE-POWER

707. High-pressure cylinder, right, head end.....
708. High-pressure cylinder, right, crank end.....
709. High-pressure cylinder, left, head end.....
710. High-pressure cylinder, left, crank end.....
711. Total .....
712. Low-pressure cylinder, right, head end.....
713. Low-pressure cylinder, right, crank end.....
714. Low-pressure cylinder, left, head end.....
715. Low-pressure cylinder, left, crank end.....
716. Total .....

DIVISION OF POWER

722. High-pressure cylinder, right side.....
723. High-pressure cylinder, left side.....
724. Low-pressure cylinder, right side.....
725. Low-pressure cylinder, left side.....
726. Right side, total .....
727. Left side, total .....
728. Total .....

PER I. H. P. HOUR

734. Dry coal, pounds.....
735. B. t. u. in fuel.....
736. Dry steam, pounds.....
737. B. t. u. in steam.....

SUMMARY OF AVERAGE RESULTS, LOCOMOTIVE

743. Dynamometer horse-power.....
744. Dry coal per D. H. P. hour, lbs.....
745. Dry steam per D. H. P. hour, lbs.....
746. B. t. u. per D. H. P. hour.....

PER ONE MILLION FOOT-POUNDS AT DRAWBAR

752. Dry coal, pounds.....
753. Dry steam, pounds.....
754. B. t. u.....
755. I. H. P. per sq. ft. of heating surface.....
756. I. H. P. per sq. ft of grate surface.....
757. D. H. P per sq. ft. of heating surface.....
758. D. H. P. per sq. ft. of grate surface.....
764. Tractive power, based on M. E. P. pounds.....

MACHINE FRICTION OF LOCOMOTIVE IN TERMS OF

770. Horse-power .....
771. M. E. P. pounds.....
772. Drawbar pull, pounds.....

EFFICIENCY

778. Machine efficiency of locomotive, per cent.....
779. Thermal efficiency of locomotive (based on fuel), per cent

RATIOS

785. Total weight of locomotive to maximum I. H. P.....
786. Total heating surface to maximum I. H. P.....
792. Test number .....

SUMMARIZED STATEMENT OF AVERAGE RESULTS

792. Test No. .....
345. Duration of tests, hours.....
352. Number of revolutions per minute.....
353. Speed, in miles per hour.....
363. Throttle opening, full or partial.....
499. Actual cut-off, per cent, H. P. cylinders.....
504. Actual cut-off, per cent, L. P. cylinders.....
294. Area of exhaust nozzle.....sq. in.....
380. Boiler pressure, lbs. per sq. in.....
383. Branch pipe pressure, lbs. per sq. in.....
386. Receiver pressure, lbs. per sq. in.....
387. Exhaust pressure, lbs. per sq. in.....
615. Average least back pressure, lbs. H. P. cylinder.....
620. Average least back pressure, lbs. L. P. cylinder.....
409. Superheat in branch pipe—Degrees, Fahr.....
410. Superheat in receiver.....

411. Superheat in exhaust.....
394. Draft in front of diaphragm, inches of water.....
395. Draft in back of diaphragm, inches of water.....
396. Draft in firebox, inches of water.....
397. Draft in ashpan, inches of water.....
458. Calorific value of dry fuel, B. t. u. per pound.....
626. Dry fuel fired per hours, lbs.....
627. Dry fuel fired per hour per sq. ft. of grate, lbs.....
633. Water delivered to boiler, lbs. per hour.....
645. Equivalent evaporation from and at 212°, lbs. per hour....
648. Equivalent evaporation from and at 212°, lbs. per hour per sq. ft. of total fire heating surface.....
658. Equivalent evaporation from and at 212°, lbs. per hour per pound of dry fuel.....
660. Boiler horse-power (34.5 U of E).....
666. Efficiency of boiler, based on fuel.....
431. Average smoke, per cent.....
639. Dry steam to engines, lbs. per hour.....
728. Indicated horse-power.....
734. Dry fuel per I. H. P. hour, lbs.....
736. Dry steam per I. H. P. hour, lbs.....
487. Drawbar pull, lbs.....
743. Dynamometer or drawbar horse-power.....
744. Dry fuel per D. H. P. hour.....lbs.
745. Dry steam per D. H. P. hour.....lbs.
778. Machine efficiency of locomotive.....per cent.
779. Thermal efficiency of locomotive, based on fuel....per cent

Road Tests

OBJECT

The object of a road test is to determine the steam and coal consumption of a locomotive per unit of power under practical conditions of the locomotive in railroad service.

PREPARATIONS

All of the preparations as given in laboratory tests should be carried out preparatory to placing the locomotive in service, with the possible exception of not having all driving wheels newly turned, and equipping the locomotive with the various instruments that can be done while the locomotive is in the shops for repairs.

FUEL

The same consideration should be given to the fuel as on a laboratory test.

To facilitate the measurement of coal and the determination of the quantity used during any desired period of the run, it is desirable to provide sufficient number of sacks, of a size holding 100 pounds, and to weigh the coal into these sacks preparatory to starting on the test.

APPARATUS AND INSTRUMENTS

The apparatus and instruments required for a road test of a locomotive are as follows:

No. 1. Platform scale for weighing coal.

No. 2. Crane, spring balance and bucket for weighing ash.

No. 3. Tank and scales for calibrating the tank.

No. 4. Graduated scale attached to water glass on boiler.

No. 5. Float for measuring height of water in tank, or, if preferred, graduated scales on all four corners of the tank.

No. 6. Pressure gages graduated to pounds for boiler, branch pipe, receiver and exhaust.

No. 7. Draft gages for smokebox, firebox and ashpan.

No. 8. Thermometers for calorimeter, branch pipe, receiver and exhaust.

No. 9. Pyrometers for firebox, smokebox, and at other points as required.

No. 10. Air-pump counters.

No. 11. Water meters.

No. 12. Steam calorimeter.

No. 13. Steam-cylinder indicators.

No. 14. Some form of speed recorder for the revolutions for the driving wheels in case no dynamometer is accessible. On Mallet type of locomotives two recorders should be used.

No. 15. Some form of pendulum indicator rigging.

No. 16. Traction dynamometer for determining pull at drawbar, with its complete equipment.

No. 17. Electrical connection between locomotive and dynamometer.

In addition to the above it will be necessary to have planimeters, micrometers, scales and calculating machines, etc.

Steam used for auxiliary purposes other than the cylinders, such as air pump, calorimeter, injector overflow, train lighting and heating and what escapes from the safety valves, may be estimated from data obtained by testing them either before or after the trial.

The scales, gages and pyrometers should be calibrated before and after the tests are made.

Application of Instruments

All of the instruments given under laboratory test should be carried on road tests as far as practicable, with a few exceptions.

The indicator rig should be some form of pendulum motion with a light tube for transmitting the reduced motion to a point near the indicator. See Fig. 5.

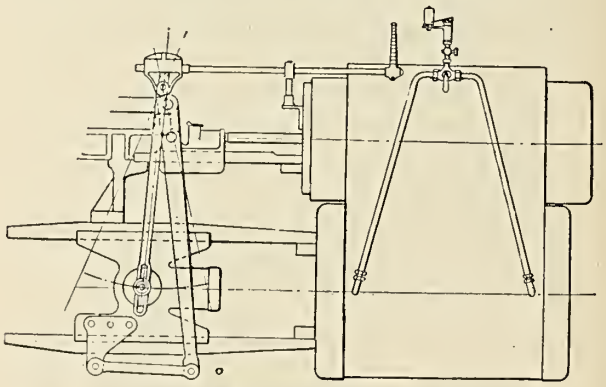

Fig. 5.—Indicator Reducing Motion for Road Tests

The apparatus which is most suitable consists of a three-way cock for the attachment of the indicator, with a steam-chest connection, so that diagrams can be drawn on each cylinder card and pressures determined.

The three-way cock should be provided with a clamp rigidly secured to the cylinder and thus overcome any tendency of the indicator to move longitudinally with reference to the driving rig. The support for the motion rod should be secured to some point on the steam chest. Care should be taken to set the indicators in such a position that the finger on the end of the motion rod travels in a direction pointing to a groove in the drum proper.

The pipes leading from the cock to the cylinder should be not less than ½ inch inside diameter, and if possible not exceeding 36 inches in length. They should be connected into the side of the cylinder, rather than into the heads. Sharp bends in the pipe should be avoided and they should be well lagged to reduce radiation.

If a dynamometer car is not used, stroke counter should be placed at some convenient point in the pilot box to record the revolutions of the drivers. This can be conveniently driven from a finger on the motion rod of the indicator rigging.

To facilitate the working of the men who operate the indicators and read the instruments at the front of the locomotive, and to protect them from wind or rain

and jolting, a suitable pilot box extending back to the cylinder and properly secured to the bumper beam should be provided. See Fig. 6.

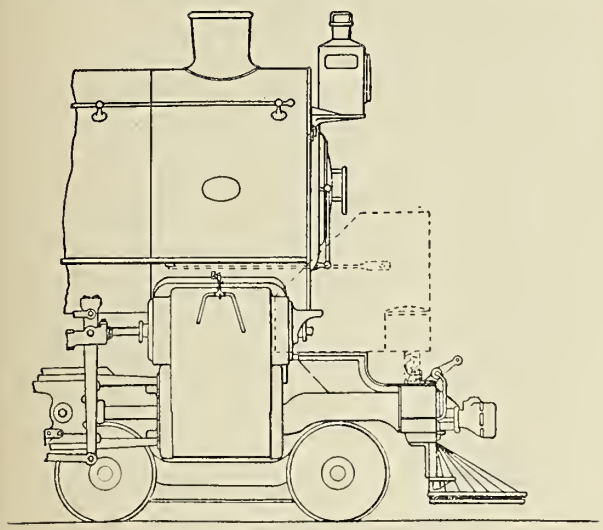

Fig. 6.—Type of Pilot Box for Road Tests

Whenever practicable, the bulbs of the thermometers used in branch pipe, receiver or exhaust should come in direct contact with the steam and no wells used. When thermometers are placed in wells, they do not respond quickly with the different changes in the working of the locomotive.

The water meters should be attached to the suction pipes of the injectors, and located at points where they can be conveniently read while the locomotive is in motion. Each meter should be provided with a check valve to prevent hot water from flowing through them from the injectors, and strainers to intercept foreign material. With the water scoops it will be impossible to use a float, but when tests are made on roads not using water scoops, a suitable float should be made for determining the water consumption. The water level may be established by using a rubber hose with glass tube inserted in the end, which will indicate the height of water in the tank, this tube to be brought in contact with a properly calibrated scale, or, if more convenient, long glass tubes may be provided at each corner of the tank for the same purpose.

In all cases the term "branch pipe" refers to the steam-supply pipe to the cylinders and not the injector branch pipe.

OPERATING CONDITIONS

The same operating conditions should be maintained as far as practicable as on a laboratory test.

DURATION

The duration of a test is the running time minus time the throttle is closed, and depends upon the length of the run between locomotive terminals. In fast passenger service the runs should be, if practicable, at least 100 miles long. In service requiring frequent stops and in freight service, the distance may be much shorter. The length of time upon which the hourly rates of consumption and evaporation are based is the total time that the throttle valve is open and not elapsed time between the starting and stopping times.

STARTING AND STOPPING

The fire having been thoroughly cleaned, banked to permit coking, fresh fuel should be supplied to a level thickness which will be required for the run. After the locomotive is attached to the train, observe the pressure, the water level or meter readings, and when the locomotive starts take this as the starting time. Thereafter cover the fire with weighed coal and proceed with the regular work of the test. The ashes and refuse should be removed from the ashpan and smokebox before the locomotive is coupled to the train.

During the run the fire should be maintained in as equal and uniform condition as practicable, and when the end of the route is reached the fire should be as level and approximately the same thickness and condition as at the start. When the locomotive is stopped and the proper level of the fire obtained, the weighed coal should be discontinued. If during the run a stop of over seven minutes is made, and in order to keep the fire in proper condition fresh fuel must be supplied, this should be selected from the unweighed coal. There should preferably be no water supplied to the boiler, and if it is supplied, allowance should be made for same.

On reaching the terminal, the fire being in the same condition as at the start, the water level and water supply should be noted. The time the locomotive comes to rest should be the time of stop of test.

RECORDS

The tests should be in charge of a competent person who is thoroughly familiar with road operations.

The number of observers required for a test depends upon the nature of the data to be obtained. When making an efficiency test at least six observers should be located on the locomotive, two for taking indicator diagrams and any other data that can be taken from the pilot box, two for cab data and two for coal and water records. It is frequently necessary to increase this force when taking special data.

In the dynamometer car at least three observers are required, one to record the time of each start and stop, passing each station and recording mile posts, point of curvature and tangent and any other important information; one to record all information on the diagram and keep track of indicator cards, and one to take car numbers and weights of trains; this latter man can also act as a relief observer. When making test of Mallet type of locomotive, the locomotive force is increased to take indicator cards from the low-pressure cylinders.

The time to take records depends entirely upon what facilities are available for recording same. If a dynamometer car is available for the tests, records should only be taken when some change in the operation of the locomotive takes place, such as throttle lever, reverse lever and boiler pressure. If the dynamometer car is not available, all records should be taken preferably every five minutes.

Special reading of the meters and total number of sacks of coal fired should be taken at specified stopping and passing points.

Careful observations should be made throughout the run, of the time passing all important points, arriving and leaving each station, and the time that the throttle valve is opened or closed, not only at each stop, but when drifting.

ASH AND REFUSE

In weighing and sampling the ash and refuse, the same preparation as described for laboratory tests should be followed as far as practicable.

SAMPLING COAL

The coal should be sampled while it is being weighed off in 100-pound lots, and a small proportion taken at different times until about 300 pounds are obtained. This should be crushed and quartered and about one quart placed in an air-tight jar and sent to chemist for analysis. When this method of sampling is used, care should be taken that the coal does not take on additional moisture, due to leaky cistern or sprinkler. If there is any question as to the coal taking additional moisture after it is once weighed out, sample should be taken from each sack as it is emptied.

CALORIFIC TEST OF COAL

The same practice as used on laboratory tests for calorific tests of coal should be used on road tests.

DATA AND RESULTS

The data and results should be reported in accordance with the form given for laboratory tests as far as practicable, and in addition a summarized form should be made giving the following information:

793. Date of test.....
794. Average number cars (pushed or pulled).....
795. Gross tons, excluding locomotive.....
796. Number 100 gross ton-miles.....
797. Number 100 adj. ton-miles.....
798. Number of stops.....
799. Distance in miles.....
800. Time on trip, hrs.....
801. Time running—hours.....
802. Time throttle open—hours.....
803. Average speed, running throttle open—M. P. H.....
380. Average boiler pressure lbs. per sq. in.....
384. Average H. P. steam-chest pressure lbs. per sq. in.....
385. Average L. P. steam-chest pressure lbs. per sq. in.....
394. Draft, front of diaphragm—in. water.....
395. Draft, back of diaghragm—in. water.....
373. Temperature feed-water—Degrees Fahr.....
368. Temperature air—Degrees Fahr.....
409. Superheat in branch pipe—Degrees Fahr.....
410. Superheat in receiver—Degrees Fahr.....
411. Superheat in exhaust—Degrees Fahr.....
804. Coal and how fired.....
418. Coal, total as fired, lbs.....
626. Dry coal per hour fired, lbs.....
627. Dry coal fired per hour per sq. ft. grate area, lbs.....
805. Water, total out of tender, lbs.....
806. Water, total evaporated, lbs.....
638. Water loss—Calorimeter, safety valves, etc., lbs.....
637. Water evaporated per pound fuel as fired, lbs.....

EQUIVALENT EVAPORATION FROM AND AT 212° F.

645. Per hour, lbs.....
648. Per hour per sq. ft. total fire heating surface.....
657. Per hour per pound coal as fired.....
660. Boiler H. P. (34.5 U of E).....
666. Efficiency of boiler based on fuel—per cent.....
639. Dry steam to engines—lbs. per hour.....
722. } I. H. P., high-pressure cylinders.....
723.
725. } I. H. P., low-pressure cylinders.....
728. Total I. H. P.....
734. Dry coal per I. H. P. hour, lbs.....
736. Dry steam per I. H. P. hour, lbs.....
487. Average drawbar pull, lbs.....
743. Dynamometer or drawbar horse-power.....
744. Dry coal per D. H. P. hour, lbs.....
745. Dry steam per D. H. P. hour, lbs.....
807. Coal as fired per 100 gross ton-miles, lbs.....
808. Coal as fired per 100 ton-miles, lbs.....
809. Water per 100 ton-miles, lbs.....
810. Coal as fired per car-mile, lbs.....
811. Water per car-mile, lbs.....

APPENDIX

The method used for obtaining the data is in most cases self-evident, but that this may be clearly understood, the following are deemed sufficiently important to require special mention.

The Marks and Davis steam tables for saturated and superheated steam are used in all calculations pertaining to the properties of steam.

Item 318. $\dfrac{\text{Item 19}}{33{,}000}$

Item 319. Constant .000001983 (Item 68^2—Item 144^2) × Item 77.
Item 320. Constant .000001983 (Item 68^2—Item 135^2) × Item 77.
Item 321. Constant .000001983 (Item 69^2—Item 145^2) × Item 78.
Item 322. Constant .000001983 (Item 69^2—Item 136^2) × Item 78.
Item 323. Constant .000001983 (Item 70^2—Item 146^2) × Item 79.
Item 324. Constant .000001983 (Item 70^2—Item 137^2) × Item 79.
Item 325. Constant .000001983 (Item 71^2—Item 147^2) × Item 80.
Item 326. Constant .000001983 (Item 71^2—Item 138^2) × Item 80.
Item 332. Constant 229.16 × Item 319.
Item 333. Constant 229.16 × Item 320.
Item 334. Constant 229.16 × Item 321.
Item 335. Constant 229.16 × Item 322.
Item 336. Constant 229.16 × Item 323.
Item 337. Constant 229.16 × Item 324.
Item 338. Constant 229.16 × Item 325.
Item 339. Constant 229.16 × Item 326.

Item 352. $\dfrac{\text{Item 351}}{60 \times \text{Item 345}}$

Item 353. $\dfrac{\text{Item 352} \times \text{Item 19}}{88}$

Item 354. $\text{Item 352} \times 2 \times \dfrac{\text{Item 77} + \text{Item 78} + \text{Item 79} + \text{Item 80}}{4}$

Item 407. $X = \dfrac{H + .48(t_s - t) - h}{r}$

t_s=temperature of steam in calorimeter in any case.
t=temperature due to saturated steam at calorimeter pressure.
h=heat of liquid due to absolute boiler pressure.
r=latent heat of dry steam due to the absolute boiler pressure.
H=total heat of dry steam due to absolute pressure in calorimeter.

Item 412. $X + (1-X)\dfrac{h-h_1}{H-h_1}$

X=quality of steam.
h_1=heat of liquid due to feed-water temperature.
H=total heat of dry steam due to absolute boiler pressure.

Item 419. $\text{Item 418} \times \dfrac{100 - \text{Item 440}}{100}$

Item 420. $\text{Item 418} \times \dfrac{100 - \text{Item 439} + \text{Item 441})}{100}$

Item 421. $\text{Item 418} \times \dfrac{\text{Item 441}}{100}$

Item 425. $\dfrac{\text{Item 638}}{\text{Item 638}}$

Item 458. $\dfrac{\text{Item 443}}{100 - \text{Item 440}} \times 100$

Item 459. $\dfrac{\text{Item 443}}{100 - \text{Item 439} + \text{Item 441}} \times 100$

Item 626. $\dfrac{\text{Item 419}}{\text{Item 345}}$

Item 627. $\dfrac{\text{Item 626}}{\text{Item 252}}$

Item 633. $\dfrac{\text{Item 481}}{\text{Item 345}}$

Item 634. $\text{Item 633} \times \text{Item 412}$

Item 635. $\dfrac{\text{Item 634}}{\text{Item 275}}$

Item 636. $\dfrac{\text{Item 634}}{\text{Item 634}}$

Item 637. $\dfrac{\text{Item 634}}{\text{Item 418}}$

Item 639. $\dfrac{\text{Item 418}}{\text{Item 345}}$ — Item 638 × Item 412.

Item 640. Saturated steam $\dfrac{H - h_1}{970.4}$

H=total heat of steam in boiler.

Superheated steam $\dfrac{H + C_p(t_2 - t_1) - h_1}{970.4}$

H = total heat of steam at branch pipe (absolute pressure).
C_p = specific heat of superheated steam in the range of temperatures (t_1 to t_2).
t_1 = temperature, degrees F., of saturated steam at absolute branch pipe pressure.
t_2 = temperature of superheated steam as observed by thermometer in degrees F.

Item 645. $\dfrac{\text{Item 634} \times \text{Item 640}}{\text{Item 645}}$

Item 648. $\dfrac{\text{Item 645}}{\text{Item 275}}$

Item 656. $\dfrac{\text{Item 645}}{\text{Item 252}}$

Item 657. $\dfrac{\text{Item 645}}{\text{Item 418}}$

Item 658. $\dfrac{\text{Item 645}}{\text{Item 345}}$

Item 659. $\dfrac{\text{Item 645}}{\text{Item 626}}$

Item 660. $\dfrac{\text{Item 645}}{\text{Item 420}}$

Item 666. $\dfrac{\text{Item 345}}{34.5}$

$\dfrac{\text{Item 658} \times 970.4 \times 100}{\text{Item 458}}$

Item 667. $\frac{\text{Item 666}}{\text{Item 275}}$

Item 668. $\frac{666}{\text{Item 252}}$

Item 697. $\frac{\text{Item 510} + \text{Item 86}}{\text{Item 495} + \text{Item 86}}$

Item 698. $\frac{\text{Item 511} + \text{Item 87}}{\text{Item 496} + \text{Item 87}}$

Item 699. $\frac{\text{Item 512} + \text{Item 88}}{\text{Item 497} + \text{Item 88}}$

Item 700. $\frac{\text{Item 513} + \text{Item 89}}{\text{Item 498} + \text{Item 89}}$

Item 707. Item 319 × Item 352 × Item 674.
Item 708. Item 320 × Item 352 × Item 675.
Item 709. Item 321 × Item 352 × Item 676.
Item 710. Item 322 × Item 352 × Item 677.
Item 712. Item 323 × Item 352 × Item 679.
Item 713. Item 324 × Item 352 × Item 680.
Item 714. Item 325 × Item 352 × Item 681.
Item 715. Item 326 × Item 352 × Item 682.
Item 722. Item 707 + Item 708.
Item 723. Item 709 + Item 710.
Item 724. Item 712 + Item 713.
Item 725. Item 714 + Item 715.
Item 726. Item 722 + Item 724.
Item 727. Item 723 + Item 725.
Item 728. Item 726 + Item 727.

Item 734. $\frac{\text{Item 626}}{\text{Item 728}}$

Item 735. Item 734 × 458.

Item 736. $\frac{(\text{Item 633} - \text{Item 638}) \times \text{Item 412}}{\text{Item 728}}$

Item 743. Item 318 × Item 352 × Item 487.

Item 744. $\frac{\text{Item 626}}{\text{Item 743}}$

Item 745. $\frac{(\text{Item 633} - \text{Item 638}) \times \text{Item 412}}{\text{Item 743}}$

Item 746. Item 744 × Item 458.

Item 752. $\frac{\text{Item 626}}{\text{M}}$

M = million foot-pounds and is obtained by:

$$\frac{\text{Item 487} \times \text{Item 19} \times \text{Item 351}}{\text{Item 345}}$$

Item 753. $\frac{(\text{Item 633} - \text{Item 638}) \times \text{Item 412}}{\text{M}}$

Item 754. Item 752 × Item 458.

Item 755. $\frac{\text{Item 728}}{\text{Item 275}}$

Item 756. $\frac{\text{Item 728}}{\text{Item 252}}$

Item 757. $\frac{\text{Item 743}}{\text{Item 275}}$

Item 758. $\frac{\text{Item 743}}{\text{Item 252}}$

Item 764. $\frac{33{,}000}{\text{Item 19}} \times \frac{\text{Item 728}}{\text{Item 352}}$

Item 771. $\frac{\text{Item770}}{\text{Item 352} \times (\text{Item 319} + \text{Item 320} + \text{Item 321} - \text{Item 322})}$

Item 772. $\frac{\text{Item 770} \times 33{,}000}{\text{Item 352} \times \text{Item 19}}$

Item 778. $\frac{\text{Item 743}}{\text{Item 728}} \times 100$

Item 779. $\frac{\text{Constant } 254655.8}{\text{Item 746}} \left(\frac{33000 \times 60}{777.52} \times 100 = \text{Constant } 2546\ 55.8 \right)$

Item 785. $\frac{\text{Item 63}}{\text{Maximum indicated horse-power}}$

Item 786. $\frac{\text{Item 275}}{\text{Maximum indicated horse-power}}$

Method to Determine Discharge from Locomotive Safety Valves on Road Tests

To determine the amount of steam discharged from the safety valves of a locomotive undergoing a road test necessitates the following preparation:

The outer side of one of the safety valves is drilled and tapped near the top of the muffler for the insertion of a plug (flush with the inside wall of the valve muffler), threaded at each end with a ⅜-inch pipe thread. The plug forms a conical convergent nozzle having a minimum orifice of 3/32 inch in diameter. A ¼-inch wrought-iron pipe is run from the plug connection down to the rear of the locomotive cab roof, where a flexible connection, such as a rubber steam hose, is made of sufficient length to reach the bulkhead of the tender. From here a ¼-inch pipe is run down along the side of the tender to a point where it is directed into the water compartment and connected to a 1-inch coiled pipe, or condenser, extending down to the bottom of the tank and connecting with a small reservoir located on the outside of the tender frame. Steam, which is admitted to this line when the safety valves lift, is condensed in the coil and collected in the reservoir. A drain cock located at the bottom of the reservoir is used to draw off the condensed steam at the end of each test for the purpose of making the desired calibration.

The accuracy of the determination required previously demands a very careful calibration of the safety valve and the orifice, so as to ascertain the exact ratio of steam discharge through the orifice to the total amount of steam discharged through the safety valves. This ratio determined, and the amount of condensed steam passing through the orifice ascertained at the end of the test, the discharge at the safety valves may be calculated for the test period.

Locomotives (In Service and Under Repairs). The following resolution was carried at the Master Mechanics' convention of 1906, That twenty-four hours be adopted as the limit distinguishing between engines in service and those under repairs, and that $100 be adopted as the limit distinguishing between running and shop repairs.

Logging Locomotive. Figs. 22, 81, 95. A locomotive used on logging railroads.

Longitudinal Brace (Engine Truck). 17, Figs. 997-1000. Flat bars secured lengthwise of an engine truck frame between the center casting and the end pieces to strengthen it and keep it square. Usually called safety beams.

Longitudinal Seam. 49, Figs. 152-186, Figs. 202-211, 214, 217. A riveted joint in the boiler shell and in the same plane as the axis of the boiler. The style of riveting and method of joining and reinforcing the seam is varied to suit the requirements.

Low Pressure Exhaust Pipe. 294, Figs. 101-140, Figs. 389-390; Fig. 393. A pipe for conveying steam from the low pressure cylinders to the exhaust pipe in the smoke-box. It is connected to the low pressure cylinders by a ball joint and to the exhaust pipe base by another ball joint. It is usually made in two sections joined together by a slip joint. Used on Mallet compound locomotives.

Low Water Alarm. Figs. 1201-1204. A device for notifying the enginemen when the water in the boiler is dangerously low. Frequently designed to extinguish the fire on the grate and to sound a whistle or gong in the cab.

Lower Brake Rod. 14, Figs. 1913-1920. A rod which connects the two brake levers of the outside hung brakes. When two levers are used the rod is attached to each lever. It is sometimes supported in case of accident by a lower brake rod carrier. With inside hung brakes the substitute for the lower brake rod becomes a part in compression and is called the brake lever coupling bar.

Lubricator. Figs. 1289-1339. Any device, as an oil cup or grease cup, for holding a lubricant and supplying it to wearing surfaces. See Oil Cup, Driving Box Lubricator, Flange Lubricator, Graphite Lubricator, Sight Feed Lubricator.

A device for forcing oil to the valves and cylinders by means of steam pressure or pumps. Figs. 1289-1317. See AUTOMATIC LUBRICATOR, FORCE FEED LUBRICATOR.

Lubricator Fittings. The piping and fittings used for placing a lubricator in position.

In 1906 the American Railway Master Mechanics' Association adopted a standard location of holding arm shoulder and oil and steam connection joint faces; also a system of fittings and joints for all connections.

Lubricator Steam Valve. A valve, usually a globe valve, screwed into the cab turret to control the supply of steam to the lubricator.

Lubricator Transfer Filler. Fig. 1292. A device by which a lubricator can be refilled while in service.

Lug. A projecting stud or ear to afford a bearing or point of attachment.

M

Machine Tools. Figs. 2351-2565.

Magneto Shield. Fig. 2159. A steel or iron plate attached to the bottom of the crossties of the frame or transoms of an electric locomotive beneath the motors, in order to prevent foreign articles from being attracted and drawn up into the moving parts.

Magneto Speed Indicator (Electric Locomotive). A small magneto generator, driven from an axle, which shows on a dial in the cab the speed at any moment by the voltage developed at the terminals of the magneto.

Main Crank Pin. Figs. 892-894. The crank pin on the main driving wheel to which the main rod is attached.

Main Reservoir (Air Brake). 156, Figs. 101-140; Figs. 1417, 1551. A cylindrical reservoir, made of sheet steel, into which air is pumped and stored for use in the air brake system and train air signal line. Sometimes placed under the cab deck or between the frames in front of the guide yoke; two are often used, placed under the running boards near the cab, one on each side of the engine. See LOCOMOTIVES, INSPECTION and TESTING.

Main Reservoir Cut-out Cock (Air Brake). Figs. 1466, 1528. A special form of cut-out cock placed in the reservoir pipe near the main reservoir in the Westinghouse ET locomotive brake equipment. It is arranged for pipe connection to the duplex compressor governor, and when closed to bleed off the pressure in the reservoir pipe when it is desired to remove the brake valves or feed valves.

Main Rod. Figs. 874, 875, 878, 879, 888, etc. Called also connecting rod, particularly in Great Britain. A large iron or steel rod of rectangular or I section, pivoted at one end to the crosshead wrist pin, and at the other to the main crank pin. It transmits the motion of the piston and piston rod to the driving wheels. See Rule 28, LOCOMOTIVES, INSPECTION and TESTING.

Main Rod Bearing. 9 and 12, Figs. 871-883. The brass and wedges inserted in the end of a main rod to form a bearing for the crank pin or the wrist pin.

Main Rod Brass. See MAIN ROD BEARING and BEARING.

Main Rod, Calculations for. In 1913 the following formulæ for calculating stresses in main and side rods were adopted as recommended practice by the American Railway Master Mechanics' Association; they were advanced to standard in 1914.

CHECKING FORMULÆ FOR MAIN AND SIDE RODS

All Measurements are Given in Inches and Pounds

A = area of section considered.
a = width of section considered.
b = depth of section considered.
C_1 = max. compression unit stress for transverse bending.
C_2 = max. compression unit stress for vertical bending.
c — c_1 — c_2 = coefficients.
d = cylinder diameter.
L = length of rod from center to center of pins.
M = bending moment.
P = max. compression strain acting at end of rod.
p = max. boiler pressure.
Q = cylinder pressure = $0.7854\ d^2\ p$.
R = radius of driving wheels.
r = radius of crank.
RG = radius of gyration of section—axis horizontal.
rg = radius of gryation of section—axis vertical.
S = stress, and where used in formulæ must not exceed one-sixth of ultimate strength of the steel.
s = amount of horizontal offset in rod.
$\underline{SM}$ = section modulus of section considered—axis horizontal.
$\underline{sm}$ = section modulus of section considered—axis vertical.
W = weight on pairs of drivers actuated through rod considered.

Main rod area must not be less than $P \div 10{,}000$ pounds.
For main rods, $P = Q$.
For side rods, $P = \dfrac{0.3\ WR}{r}$

To determine C_1 and C_2, calculations should be based on a section half way between rod pins.

For transverse bending in rods having knuckle pins flexible transversely:

$$C_1 = \frac{\dfrac{P}{A}}{I - \dfrac{PL^2}{675{,}000{,}000\ \underline{A\ rg^2}}}$$

For all other rods:

$$C_1 = \frac{\dfrac{P}{A}}{I - \dfrac{PL_2}{1{,}200{,}000{,}000\ \underline{A\ rg_2}}}$$

For vertical bending in all rods:

$$C_2 = \frac{\dfrac{P}{A}}{I - \dfrac{PL_2}{300{,}000{,}000\ \underline{A\ RG_2}}}$$

Values for C_1 and C_2 can also be taken from tables in "Kent's Pocket Book," under heading, "Merriman's Rational Formula for Columns."

First:

For rods without offset the larger value of C_1 and C_2 should be taken equal to S.

For rods with offset the larger value of $C_1 + \dfrac{Ps}{\underline{sm}}$ and C_2 should be taken equal to S.

Second:

$$S = c\frac{AL^2r}{\underline{SM}} + c_1 P\left(\frac{1}{A} + \frac{s}{\underline{sm}}\right)$$

The calculations should be based on a section located at a distance 0.6 L from crosshead pin for main rods, and half way between pins for side rods.

VALUES OF C AND C_1

Rev. Per Min.		265	325	375	420
Main Rod.....	C =	0.036	0.055	0.073	0.091
	C_1 =	0.500	0.500	0.400	0.300
Side Rod	C =	0.071	0.106	0.142	0.177
	C_1 =	0.500	0.500	0.500	0.500

The coefficients selected should correspond with the highest number of revolutions per minute which the locomotive can make.

If this can not be determined, use:

420 r. p. m. for high-speed locomotives.

375 r. p. m. for passenger and high-speed freight locomotives.

325 r. p. m. for all other locomotives.

Very simple rules for rods, without offset, and having bodies with rectangular section, based on the above theory, follow.

First:

Stress is less than one-sixth of ultimate strength of the steel if "L" is less than 46 "a" or 23 "b," and if "A" is more than "P" divide by one-eighth of ultimate strength of the steel.

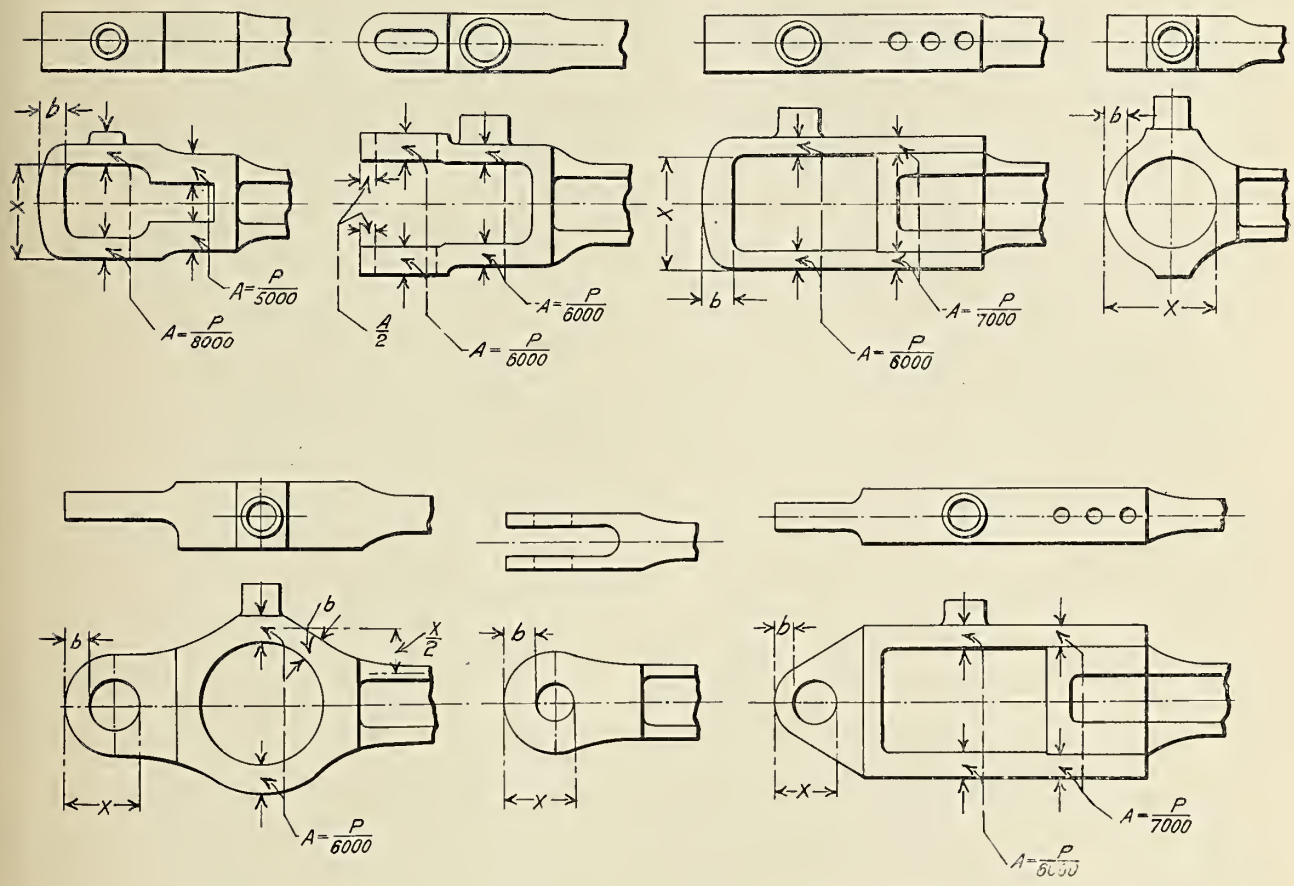

Second:

$$S = c_2 \frac{L^2 r}{b} + c_1 \frac{P}{A}$$

VALUES OF C_2 and C_1

	Rev. Per Min.	265	325	375	420
Main Rod	C_2 —	0.22	0.33	0.44	0.55
	C_1 —	0.50	0.50	0.40	0.30
Side Rod	C_2 —	0.43	0.64	0.85	1.06
	C_1 —	0.50	0.50	0.50	0.50

The allowable stresses for the various sections of rod ends are given in connection with the diagrams following, except where thickness of section is indicated by the letter "b." The figures denote maximum stress allowed under end load "P." If the minimum areas of the two members differ, take double the lesser area for "A."

The minimum area at points indicated by letter "b":

For main rods and main pin bearing of side rod, $A = \frac{PX}{30{,}000\ b}$

For side rods, except main pin bearing, $A = \frac{PX}{60{,}000\ b}$

In which "X" is the average diameter of eye or average spread of jaw members.

Main Rod End. 11, Figs. 871-883; Figs. 872, 877, 880, 882. The enlargement on the end of a main rod which holds the brass or bearing. See Stud End.

Main Rod Oil Cup. 1, Figs. 871-883. A receptacle for holding oil for lubricating a main rod bearing, frequently forged solid with and machined on the rod end. See Oil Cup.

Main Steam Valve (Air Compressor). A valve mechanism consisting of two main valve pistons of different diameters which operate the main slide valve to admit and exhaust steam above and below the steam piston. This valve mechanism is operated at the end of each stroke by alternately admitting and releasing steam pressure back of the larger main valve piston, through the medium of the reversing valve, reversing valve rod, and reversing valve plate. See Cab Turret Valve.

The steam chest valve is sometimes termed a main steam valve.

Malleable Iron. Cast iron which has been annealed and the brittleness greatly decreased by packing the castings in iron pots containing forge scale, hematite ore or some other oxide of iron and subjecting them to a continued red heat for from four to six days. They are then allowed to cool slowly. The change which takes place is internal, and while little or no carbon is removed its physical condition is changed from graphite to amorphous or cement carbon and the iron is rendered less brittle. Malleable castings can be bent within moderate limits, but are not truly malleable like wrought iron. Many parts used in locomotive work are made of it, including couplers, brake levers, journal boxes and many small castings.

Mallet Articulated Compound Locomotive. Figs. 2, 75-92, 133-142. A locomotive having two sets of frames connected by a hinge or pivot joint. The rear frames, which are held rigid in alignment with the boiler, are

carried on a separate group of driving wheels, and frequently a trailing truck, and are driven by the high pressure cylinders mounted on the frames at the leading driver, thus forming a separate engine or unit. The front frames, which are connected to the rear unit by a hinge placed on the center line of the high pressure cylinders, are carried on a group of driving wheels, and frequently a leading truck, and are driven by the low pressure cylinders mounted either at the leading or rear driver, thus forming the leading engine or unit. The low pressure cylinders receive the exhaust steam through flexible pipes from the high pressure cylinders. This system of compounding was first proposed by A. Mallet. Usually the front frames support the forward end of the boiler on sliding bearings which allow the leading unit to swivel radially about the pivot connection, giving the effect of a truck. In some designs, however, the leading unit is rigidly secured to the forward end of the boiler and the swiveling effect is secured by means of an articulated or flexible boiler. These features make it possible to produce a locomotive with a large tractive effort, short rigid wheelbase and nominal wheel pressures. The term Mallet is now generally applied to all articulated locomotives of this type without reference to the system of compounding. Mallet articulated locomotives are also built with four simple cylinders, doing away with the compound features, Fig. 89. Used in heavy freight and pushing service. See WHYTE'S NOMENCLATURE, Fig. 2, for various wheel arrangements. See also BALDWIN ARTICULATED COMPOUND LOCOMOTIVE and AMERICAN ARTICULATED COMPOUND LOCOMOTIVE.

Mallet Articulated (Triplex) Compound Locomotive. Figs. 92, 137. A locomotive with three pairs of cylinders and three groups of drivers. The third group of drivers being located under the tender. Two cylinders are high pressure and four low pressure, the high pressure pair driving the middle group of wheels. The right high pressure cylinder exhausts into a receiver which supplies the front pair of low pressure cylinders, and the left high pressure supplies the rear pair in a similar manner.

Mandrel (for Lathes). A shaft serving as a temporary axis for objects to be turned.

(Foundry.) A plug around which a body of metal is cast.

Mandrel Pin or **Cross Bar** (Swing Link Hanger). The bar which supports the swing plank. See SWING HANGER.

Manhole. See TANK MANHOLE.

Manhole Cover. A lid to close a TANK MANHOLE.

Manhole Eye. A ring fastened to the lid of a TANK MANHOLE.

Manhole Hinge. A hinge by which a tank manhole cover is attached to the manhole ring. See TANK MANHOLE HINGE.

Mansell Retaining Ring. Figs. 2035, 2036. A mode of connecting steel tires to the wheel centers by a ring of an approximate L or U cross-section, which secures the tire to the wheel, so that every part of the tire is securely held.

Marker Lamp. Figs. 1708-1718. A SIGNAL LAMP, which see, used on locomotives or trains to indicate the class of the train, whether first or second section of a regular train, helper engine or extra train. A classification lamp.

Master Controller. Figs. 2207-2208. See CONTROL SYSTEM.

Master Mechanics' Standards. Figs. 2242-2288. The American Railway Master Mechanics' Association has adopted standards of practice as follows:

Axles, Driving and Engine Truck, Specifications for See AXLE.
Axles, Tender, Specifications. See AXLE.
Boiler Steel Specifications. See STEEL.
Bolt Heads. See SCREW THREAD.
Cast Iron Wheels, Specifications. See WHEEL.
Castings for Cylinders, etc., Specifications. See CYLINDER CASTINGS.
Castle Nuts. See CASTLE NUTS.
Cotter Pins. See CASTLE NUTS.
Cylinder Castings, Specifications for. See CYLINDER CASTINGS.
Decimal Gage. See DECIMAL GAGE.
Driving Wheel enter. See DRIVING WHEEL CENTERS and SIZES OF TIRES.
Firebox Steel Specifications. See STEEL.
Forgings, Specifications for. See FORGING and BLOOMS and BILLETS.
Gage, Decimal. See DECIMAL GAGE.
Gage, Sheet Metal. See SHEET METAL GAGE.
Gages for Cast Iron Wheels.
Gages for Round Iron. See LIMIT GAGES FOR ROUND IRON.
Gages for Turning Wheel Centers and Boring Tires. See TIRE SHRINKAGE and DRIVING WHEEL CENTERS and SIZES OF TIRES.
Journal Bearing and Wedge. See JOURNAL BEARING and JOURNAL BEARING WEDGE.
Journal Boxes and Parts. See JOURNAL BOX.
Locomotive Tests, Method of Conducting. See LOCOMOTIVE TESTS.
Lubricators, Fittings for. See LUBRICATOR FITTINGS.
Nuts. See SCREW THREAD and CASTLE NUTS.
Pig Iron Specifications. See PIG IRON.
Pipe Unions, Standard. See PIPE UNIONS.
Pipe, Wrought Iron, Dimensions. See PIPE SCREW THREAD.
Round Iron, Gages for. See LIMIT GAGES FOR ROUND IRON.
Safety Valves, Specifications for. See SAFETY VALVE.
Screw Threads. See SCREW THREADS.
Sheet Metal Gage. See SHEET METAL GAGE.
Spokes, Driving Wheel. See SPOKE.
Steel Blooms and Billets. See BLOOMS AND BILLETS.
Steel, Boiler and Firebox, Specifications. See STEEL.
Tire, Section of and Sizes. See TIRE SECTIONS, TIRE SHRINKAGE.
Tires, Shrinkage Allowance for. See TIRE SHRINKAGE.
Tires, Standard Section. See TIRE SECTIONS.
Tubes, Specifications for. See TUBES.
Wheels, Cast Iron. See WHEEL.
Wheels, Cast Iron, Specifications for. See WHEEL.
Wheels, Distance Between Backs of Flanges. See FLANGES, DISTANCE BETWEEN BACKS OF.
Wheel Centers, Driving. See DRIVING WHEEL CENTERS and SIZES OF TIRES.
Wheels, Cast Iron, Gages for.
Wheel Spokes. See SPOKE.

Mastodon Locomotive (4-10-0). Fig. 2. A locomotive having a four-wheel front truck and five pairs of coupled driving wheels, but no trailing truck. Not in general use.

Mikado Locomotive (2-8-2). Figs. 1, 37-44, 111-115. A

locomotive having a two-wheel front truck, four pairs of coupled driving wheels and a two-wheel trailing truck. Used for heavy freight service.

Mineral Wool. A substance having much the appearance of wool which is manufactured from the slag of iron furnaces by throwing against it while in the molten state a strong blast of air. It is used largely as a non-conductor for coating steam pipes.

Mining Locomotive. A small locomotive operated by steam, compressed air or electricity for hauling cars in mines.

Mogul Locomotive (2-6-0). Figs. 1, 26-27, 107. A locomotive having a two-wheel front truck and three pairs of coupled driving wheels, but no trailing truck. Used in freight service.

Molding. "A mode of ornamentation by grooved or swelling bands or forms, following the line of the object." —Knight. Small moldings are often termed beads, and also fillets. A cove molding is one of concave section. There are a great variety of other special technical terms for different forms of moldings.

Monkey Wrench. See Wrench.

Motion Plate (British). See Guide Yoke.

Motor (Electric Locomotives). Figs. 2117, 2142, 2143, 2164, 2165, 2186. A machine for converting electrical energy into mechanical energy in the form of rotary motion. It consists of a rotating Armature, which see, turning in a magnetic field produced by an electric current flowing through coils surrounding soft iron pole pieces. Motors for electric locomotives are built to operate with direct current, alternating current and with either alternating or direct current. See Alternating Current—Direct Current Motor and Electric Locomotive.

Motor Armature. See Armature.

Motor Blower (Electric Locomotive). A motor-driven fan on an electric locomotive for supplying a blast of air for the purpose of cooling the transformer, rheostat and motors.

Motor Car. Figs. 2230-2236. A car propelled by some form of motor located on the car itself. The common types of motor cars are: Electric, which are equipped with electric motors and receive current from either a third rail, trolley wire or storage battery system; gasoline, which are propelled by internal combustion engines; gasoline-electric or gas-electric, which are equipped with an internal combustion engine, connected to a dynamo, thus generating electric energy for the use of the usual electric motors; and steam, which are equipped with a boiler and steam engine for turning the wheels.

Motor Controller. See Controller.

Motor-Driven Air Compressor (Air Brakes). Fig. 2229. An air compressor driven by a motor for use on electric locomotives.

Motor Field Frame. 12-13, Fig. 2127. A casting forming the housing surrounding the armature of a motor and to which the field magnets and magnet coils are attached.

Motor Truck. Figs. 2239-2240. A truck designed to carry an electric motor, which is connected to the axles by means of gears. Used on motor cars and electric locomotives.

Motormen's Brake Valve. See Engineer's Brake Valve.

Mountain Type Locomotive (4-8-2). Figs. 2, 72-74, 131-132. A locomotive having a four-wheel front truck, four pairs of coupled driving wheels and a two-wheel trailing truck. Used for heavy fast passenger service over heavy grades.

Muck Bar. "Bar iron which has passed once through the rolls. It is usually cut into lengths, piled and rerolled." —Knight. Certain grades of iron axles are made directly from muck bars and contain no scrap. See Axle.

Mud Door (British). See Hand Hole.

Mud Drum. A shallow cylindrical receptacle in the bottom of the shell of a boiler near the smokebox, closed by a cast iron cover or plate bolted to a ring that is riveted to the plate forming the drum. Its purpose is to facilitate the removal of mud and sediment that accumulates in that part of the boiler. See Hand Hole.

Mud Drum Plug. A plug cock or blow-off cock screwed into the mud drum cover.

Mud Ring. Figs. 152-186, Fig. 190. An iron or steel bar, shaped to correspond to the ground plan of a firebox, rounded at the corners, separating the inside and outside sheets of the firebox, and to which these sheets are riveted. Also called Foundation Ring.

Mud Ring Cross Brace. 12, Figs. 443-465. A casting bolted to the bottom of the mud ring and placed transversely across the firebox for the purpose of supporting the grate bearers.

Muffler (Vacuum Brake). A device to render noiseless the emission of steam at the ejector when brakes are applied. It is simply a lot of beads or shot, through the interstices of which the steam forces its way. See also Exhaust Muffler.

Muley Axle. An axle without collars.

Multiple. A mode of connecting two or more motors to the supply circuit. Two motors are said to be in multiple or in parallel when the current divides and a part of it passes through each motor.

Multiple Control Switch. See Control System.

Multiple Fastener. Fig. 2075.

Multiple Unit Control (Electric Cars). Used to designate control systems designed for the operation of two or more motor cars or electric locomotives in a train when the motors on all the units are controlled simultaneously by one operator. See Control System.

N

Nail. "A small pointed piece of metal, usually with a head, to be driven into a board or other piece of timber, and serving to fasten it to the other timber."—Webster.

The common nails of commerce are divided into cut nails, clinch nails, and wire nails. They are distinguished in size by the weight, as 10d., 20d., etc., nails.

Name Plate. A cast iron or brass plate, commonly fastened on each side of the smokebox, giving the name of the builder of the locomotive.

Narrow Firebox. Figs. 147, 155. A firebox narrow enough to extend down between the frames and driving wheels. See Firebox.

Nest Spring. Fig. 1902. A spiral spring with one or more coils of springs inside of it.

Netting. See Smokebox Netting.

Nigger Head. See Tee Head.

Nipple (Pipe Fittings). A short wrought iron pipe with a screw thread cut on each end, used for connecting couplings, tees, etc., together or with some other object, as a tank or heater. See Hose Nipple.

Non-Pressure Head (Brake Cylinder). The cover for the end of the brake cylinder opposite to that having air pressure against it. It has an opening in the center for the piston rod.

Nose. See Pilot Nose.

Nosing. 15, Figs. 1052-1056. An iron band fastened on the outside of the bottom pieces of a pilot frame, and on the edges of the running board.

(Of steps.) The part of a tread board which projects beyond the riser, hence the metallic moldings used to protect that part of the tread board. The nosings should be distinguished from the step facings.

Number Plate. 23, Figs. 361-407; 138, Figs. 101-140, Fig. 379. A round or square metal plate fastened to the smokebox door, with the number of the locomotive in raised figures upon it.

Nut. "A small block of metal or wood containing a concave or female screw."—Webster. Nuts take their names from the bolts, rods or other parts to which they are attached. They are usually either square or hexagonal. See Screw Threads for A. R. M. M. A. Standard Nuts.

O

Ohm. The unit of electrical resistance.

Oil Box. See Journal Box.

Oil Burner. 17, Fig. 261, Figs. 272-274. A device for burning crude oil in a locomotive firebox by vaporization in a nozzle to which a supply of air and steam can be admitted to effect complete combustion. In modern practice the burner is placed at the front end of the firebox thus projecting the flames toward the back of the fire pan and causing them to completely fill the firebox before entering the fire tubes.

Oil Burner Blow-out Cock. A valve for admitting steam or air to an oil burner for the purpose of cleaning it of soot and dirt.

Oil Burner Clamp. Fig. 260. A clamp for holding the oil burner in place.

Oil Burner Cock. 10, Fig. 261. A valve for admitting oil to an oil burner.

Oil Burning Fireboxes. Figs. 258-270.

Oil Can. Figs. 2295, 2300, 2301, 2318, 2319, 2326, 2327. A vessel for holding oil, consisting usually of a cylindrical receptacle having a long spout or tube to make it possible to reach any bearing or oil hole. Oil cans are commonly made of tin plate, brass or copper.

Oil Can Holder. A shelf on the boiler head for holding the oil cans used on an engine.

Oil Cup. Figs. 1320-1331. A receptacle for containing oil and usually fitted with a feed control device for supplying oil to the various parts of a locomotive. There are oil or grease cups on all side and main rod bearings, on rocker boxes, eccentrics, and all other wearing parts of the valve gear, piston rods, guides and crossheads.

Oil Heater. See Engine Oil Heater and Tank Oil Heater.

Oil Heater Drip Pipe. A pipe for draining the water from an engine or tank oil heater on an oil burning locomotive.

Oil Lamp. A lamp for burning oil.

Oil Measuring Rod. 14, Fig. 261. A rod in the tender oil tank for measuring the height of the oil level in the tank.

Oil Regulator. 12, Fig. 261. A valve with an extension handle running to the cab, placed in the oil supply pipe to regulate the amount of oil supplied to the oil burner according to the demand for steam.

Oil Regulator Quadrant. A quadrant for regulating the movement of the oil regulator.

Oil Supply Valve. Fig. 271. A plug valve in the oil tank of the tender to close the mouth of the oil supply pipe leading to the locomotive. Also called tank valve.

Oil Tank. Figs. 1748-1757. A tank on the tender for holding the fuel oil. See Rule 54, Locomotives, Inspection and Testing.

Oil Valve. See Tank Oil Valve.

Open Return Bend (Pipe Fittings). A short cast or malleable iron U-shaped tube for uniting two parallel pipes. It differs from a close return bend, in having the arms separated from each other.

Operating Valve (Traction Brake). See Engineer's Brake Valve.

Order Clip. A snap catch for holding train orders, placed in a conspicuous place in the cab.

Outside Admission Valve. A valve which admits steam to the cylinder through ports which are uncovered by the outside edges of the ends of the valve and opens the exhaust ports by the inside edges of its ends. See Valve and Slide Valve.

Outside Firebox Sheet. 8, Figs. 152-186. The outside plate of a boiler forming the side water legs at the firebox and riveted to the roof sheet and mud ring. Frequently the roof sheet and outside firebox sheets are combined in one continuous sheet. The outside firebox sheet is secured to the firebox side sheet by staybolts.

Outside Lap (Valve). The extension of the outside edge of a slide valve beyond the outside edge of a steam port is the outside lap. Its effect on the steam distribution in a cylinder is to shorten the period of admission; in other words, to make the valve cut-off shorter. Sometimes called steam lap. See Inside Lap.

Outside Welt. 51, Figs. 152-186. See Welt.

Over-Running Rail. See Third-Rail.

Overhang (Cab Roof). 21, Figs. 1110-1143. The rear of a cab roof which extends out over the apron.

Overhead Contact Shoe. 1, Fig. 2127. A metal bar for collecting current from the overhead trolley wire along which it slides. It is held in place by the pantagraph.

P

Pacific Type Locomotive (4-6-2). Figs. 2, 62-69, 125-129. A locomotive having a four-wheel front truck, three pairs of coupled driving wheels and a two-wheel trailing truck. Used for heavy fast passenger service.

Packing. Figs. 828-840. A device or arrangement for making a steam-tight fitting on the piston rod and valve stem where they pass through their stuffing boxes on cylinder and steam chest, respectively. Also used on air pump piston rods and throttle rods. Metallic packing, generally employed, consists of a set of soft metal rings, each cut in one place so as to take up the wear of a rod, and held in place by

a spring. Asbestos, hemp and other packings are also used. The term is also applied to the rings used on pistons.

(Journal Boxes.) The waste saturated with oil or other lubricant, used in journal box cellars to lubricate the bearing.

Packing Expander (Brake Cylinder). A spring wire ring for spreading out the leather packing of the brake piston so as to make it fit air tight. See PISTON PACKING EXPANDER.

Packing Gland. See STUFFING BOX.

Packing Leather (Brake Cylinder). A ring of leather used in connection with brake cylinder pistons to make an air-tight joint. When so used it is always accompanied with a packing leather expander. A packing leather for a piston rod is called a cup leather, and is compressed by a piston spring. See PISTON PACKING LEATHER.

Packing Ring (Air Brake). A soft metal ring set in a groove in the pistons of the steam and air cylinders of an air compressor, and in the triple valve, and engineer's brake valve, to make a steam-tight or air-tight fit in the respective cylinders. The rings are turned slightly larger than the cylinder and cut apart diagonally at one point so that when compressed they will tend to spring open. See CYLINDER CASTINGS.

(Hose Coupling.) An india rubber ring in a coupling case which makes a tight joint between the two parts of the coupling.

A term sometimes used to mean PISTON RING.

Packing Tools. Special tools made for the purpose of removing and replacing journal-box packing. Also called packing irons.

Paint. The protective and coloring material applied to the outside of a locomotive and tender.

Panel. A board inserted in the space left between the stiles and rails of a frame or between moldings. Sometimes metal plates are used for this purpose.

Pantagraph. Figs. 2155, 2191, 2237. A combination of springs and levers, actuated by compressed air, used on electric locomotives for making overhead contact with the trolley wire.

Pantagraph Base. A support or platform on the cab roof for the pantagraph.

Parallel Rods. See SIDE ROD.

Patch Bolt. A small threaded plug with a square head and washer formed on it, used for plugging staybolt holes or applying temporary patch plates to boilers.

Patent Plate. A brass or iron plate, stamped or cast with the name of the maker of some special equipment used on a locomotive such as an air compressor, injector, compound cylinder arrangement, lubricator, etc.

Pawl. A short metal piece pivoted at the center and fitting into the ratchet of a hand-brake wheel on a tender. Knight's definition is "A pivoted bar adapted to fall into the notches or teeth of a wheel as it rotates in one direction, and to restrain it from back motion. Used in windlasses, capstans and similar machinery." See BRAKE PAWL.

Pedestal (Trucks). 117, Figs. 101-140; 11a, Figs. 504, 508; 23, Figs. 976-987; 17, Figs. 1014-1020. Fig. 1023. A casting of somewhat the form of an inverted letter U, bolted to the wheel piece of a truck frame to hold the journal box in its place, while permitting a vertical movement. The two projections of a pedestal are called pedestal horns, and the space between them a jaw, which is closed at the bottom by a PEDESTAL BRACE, which see. In Great Britain pedestals are called axle guards on cars and hornplates on locomotives, and are there made of wrought iron.

(Locomotive.) 74, Figs. 101-140; 3, Figs. 504-508. The vertical legs of a locomotive frame that hold a driving box in place. The front leg of a pedestal is usually made vertical and the back leg sloping, and the opening between the legs into which the box fits is often called the pedestal jaw. British, hornblock, axlebox guide or hornplate.

Pedestal Binder. 75, Figs. 101-140; 4, Figs. 504-508, Figs. 521, 541. Called also pedestal cap and pedestal brace. A cast or wrought iron, or cast steel bar or filling piece fitted across the opening between the pedestal legs and held in place by bolts passing through the bottom rail or brace of the frame. See PEDESTAL THIMBLE. British, hornplate stay.

Pedestal Bolt. 5, Figs. 504-508; 9, Figs. 997-1000. Bolts holding a pedestal cap or binder in place on either the main frame or a truck frame.

Pedestal Bolt Key. A key or cotter passed through an opening in the end of a pedestal bolt to prevent the nut from jarring loose and falling off.

Pedestal Box. See JOURNAL BOX.

Pedestal Brace (Trucks). 23, Figs. 1032-1033. A diagonal bar or rod staying the lower end of a pedestal longitudinally. It is often combined into one piece with a pedestal tie bar to form a pedestal brace tie bar.

Pedestal Brace Tie Bar. A pedestal brace and a pedestal tie bar combined in one piece. See above.

Pedestal Cap (Engine Truck). A piece fitted in the opening of the truck pedestal jaw and held in place by a brace or binder. See PEDESTAL BRACE and PEDESTAL BINDER.

Pedestal Crosstie (Engine Truck). 8b, Figs. 997-1000. Transverse braces bolted to the bottom of the truck pedestals or to the pedestal braces to strengthen them laterally.

(Electric). A bar extending from the bottom of the leg of one pedestal to another on the other side of the truck and serving to brace and hold the two together. 87, Figs. 2145-2147.

Pedestal Jaw. It is closed at the bottom by a jaw bit or a pedestal brace. See PEDESTAL.

Pedestal Spring. See JOURNAL SPRING.

Pedestal Stay Rod. See PEDESTAL CROSSTIE.

Pedestal Thimble. A cast-iron filling piece in the pedestal jaw or opening between the pedestal legs, held in place by a bolt passing through it longitudinally. Used on frames where the usual form of pedestal binder or cap would interfere with the wedge bolts. See FRAME WEDGE BOLT.

Pedestal Tie. A U-shaped bolt with nuts on the ends that passes around the outside of the pedestal legs and holds the cap in place. Not commonly used.

Pedestal Tie Bar. 8, Figs. 1027-1031; 24, Figs. 976-987; 8, Figs. 997-1000. An iron bar or rod bolted to the bottom of two or more pedestals on the same side of a truck, thus holding or tying them together.

Pedestal Trucks. Figs. 996-1000. Trucks so-called because the journal boxes are held in jaws or pedestals which are bolted to or are integral with the truck frame as distinguished from arch bar trucks and those

having the journal boxes cast integral with the truck side frame.

Petticoat Pipe. 265, Figs. 101-140; 40, Figs. 361-407. A pipe in the smokebox over or surounding the exhaust pipe for the purpose of causing a partial vacuum in the front end and tubes.

Petticoat Pipe Bracket. 41, Figs. 361-407, Figs. 408, 409. A bracket bolted to the smokebox shell for the purpose of supporting the petticoat pipe.

Phosphor Bronze. "A term applied to an alloy of bronze or brass, or to a triple alloy of copper, tin and zinc, which has been given special purity and excellence by skillful fluxing with phosphorus. It is supposed that the presence of phosphorus gives the tin a crystalline character which enables it to alloy more completely and strongly with the copper. Whether for this reason or not, the phosphor bronzes, when skillfully made, are greatly superior to unphosphorate alloys."—Thurston.

Pig Iron. Cast iron which has been cast into pigs direct from the blast furnace. This name is also applied to molten cast iron which is about to be so cast into pigs or is in a conditon in which it could readily be cast into pigs. (Howe.) The Specifications for Foundry Pig Iron adopted by the A. R. M. M. A. in 1908 are:

The material desired under this specification is an open-grain foundry pig conforming to and graded by the following detail specifications:

Combined carbon.....	.40 to .70 per cent.
Manganese	.40 to .80 per cent.
Phosphorus	.40 to .80 per cent.
Sulphur, not over.....	.06 per cent.

The grades are determined by the amount of silicon, in accordance with the attached schedule:

Grade No. 1, silicon...	3.00 to 2.50 per cent.
Grade No. 2, silicon...	2.50 to 2.00 per cent.
Grade No. 3, silicon...	2.00 to 1.50 per cent.
Grade No. 4, silicon...	1.50 to 1.00 per cent.

Each carload, or its equivalent, shall be considered as a unit. At least one pig shall be selected at random for each four tons of every carload and so as to fairly represent it.

Drillings shall be taken so as to fairly represent the fracture surface of each pig, and the sample analyzed shall consist of an equal quantity of drillings from each pig, well mixed and ground before analysis.

In case of disagreement between buyer and seller, an independent analyst, to be mutually agreed upon, shall be engaged to sample and analyze the iron. In this event one pig shall be taken to represent every two tons.

The cost of this sampling and analysis shall be borne by the buyer if the shipment is proved up to specifications, and by the seller if otherwise.

Pilot. 144, Figs. 101-140; Figs. 1051-1062. A structure consisting of a triangular frame having its apex on the center line of the locomotive and track and its base parallel to the bumper or pilot beam, and suspended from it by a back frame and numerous bars fastened to the triangular frame and extending up and backward to the bumper beam. Made of wood, iron or pressed steel and used to remove obstructions from the track. Usually applied to the front end of locomotives in road service and sometimes to the back end of tenders. Not generally used on switch engines. Formerly called cow catcher. See Rule 41, Locomotives, Inspection and Testing.

Pilot Angle. A right-angled piece of iron or steel bolted to the horizontal and vertical frames on each side of a pilot to stiffen and secure it. Called also pilot corner bracket.

Pilot Band. 15, Figs. 1052, 1056. A strip of iron bolted on the outside of the bottom rail or frame of a pilot. Also called pilot nosing.

Pilot Bars. 14, Figs. 1052-1056. The wooden strips or iron rods fastened to the bottom frame and to the pilot beam of a pilot.

Pilot Beam. Figs. 1051, 1057, 1059, 1063, 1065-1070. A piece of timber or an iron or steel casting secured across the frames at the front of locomotive to absorb shock and support the pilot and coupler. See Bumper Beam.

Pilot Beam Hand Hold. See Safety Appliance Standards.

Pilot Bottom Plate. A triangular plate or iron or steel bolted on the under side of the bottom frame of a pilot.

Pilot Bracket. 146, Figs. 101-140. A right-angled casting bolted to the vertical frame of a pilot on each side and to the under side of the bumper beam or engine frame to strengthen the pilot frame. Called also pilot knee.

Pilot Center Brace. 196, Figs. 101-140. One of two braces bolted to the back or bottom of a pilot frame near each corner and to the main frames or the cylinder saddles. Called also pilot middle brace.

Pilot Corner Bracket. See Pilot Angle.

Pilot Cross Braces. Two braces bolted to the inside of a pilot frame, crossing each other, and secured to the cylinder saddles or bumper beam.

Pilot Diagonal Brace. 3, Figs. 1052-1056. A rod secured to the bottom of a pilot near the nose and to the bumper beam at the top. Two braces are commonly used, one on either side of the center.

Pilot Frame. The framing or principal members on which a pilot is built.

Pilot Heel Brace. See Pilot Center Brace.

Pilot Knee. See Pilot Bracket.

Pilot Light. A small light kept burning for the purpose of igniting the oil in an oil burner.

Pilot Light Oil Cock. 11, Fig. 261. A small valve controlling the supply of oil to the pilot light.

Pilot Middle Brace. See Pilot Center Brace.

Pilot Nose. The tip, point or apex of a pilot.

Pilot Plate. A plate bolted on the back of a bumper beam between the frames. Called usually a pilot stiffening plate to distinguish it from the pilot bottom plate.

Pilot Shield. A name sometimes used for a small snow plow or scraper made of thin sheet steel and secured to the front of the pilot.

Pilot Shoe. A cup-shaped casting bolted to a bumper to receive the end of a push pole. A shoe is fastened or cast on each end of the bumper beam. Called also push pole pocket or pilot pushing shoe, and sometimes, switching eye.

Pilot Sill Step. See Safety Appliance Standards.

Pilot Step. 197, Figs. 101-140; 18, Figs. 1052-1056; Fig. 1064. A bracket secured on each side of a pilot to enable a man to mount the front bumper. See SAFETY APPLIANCE STANDARDS.

Pilot Strap. See PILOT BAND.

Pin. "A peg or bolt of wood or metal having many uses." —Knight. In railroad service the word, when used alone, commonly means a coupling pin. See CRANK PIN.

Pinch Bar. Fig. 2297. A lever with one end bent so as to form a fulcrum foot and a chisel point or nose, used to move a locomotive or tender a very short distance forward or backward by successive applications on the rail under the tread of a wheel.

Pinion. The smaller cog wheel of two wheels in gear.

A small toothed wheel keyed to the armature shaft of an electric motor, and engaging with or meshing into a larger toothed wheel, called a gear wheel, fastened on the driving axle.

Pipe. "A tube for conveyance of water, air or other fluids."—Knight. See BRAKE PIPE, DISCHARGE PIPE, DRY PIPE, SIGNAL PIPE, STEAM PIPE.

Pipe Bracket. A support for a pipe, as injector delivery pipe bracket.

(Air Brake.) That part of a valve device serving as its support, to which the pipe connections are made and from which it may be removed without breaking any pipe joints.

Pipe Bushing. See BUSHING.

Pipe Clamp. Figs. 1596, 1598. A clamp for the air brake pipe or train pipe under the engine or tender.

Pipe Clip or Strap. An iron band for fastening a pipe against or to some other object. They are usually single, but sometimes double, for two or more pipes.

Pipe Coupling. A short cast iron tube with a thread cut on the inside at each end, which is screwed on the ends of two pipes and used for uniting them together, or uniting one pipe with another object, as a cock or valve. In some couplings the thread at one end is right hand and the other left hand, but generally they are both right hand threads. See UNION.

Pipe Fittings. Figs. 1729-1746. The connections for systems of gas, water and steam pipes. The more usual pipe fittings are bushings, elbows, tees, return bends (close or open), reducers, couplings, nipples, plugs, clips, etc.

Pipe Hanger. Figs. 1599, 1601. A hanger for the brake pipe or other pipe under a tender.

Pipe Reducer. See PIPE FITTINGS. Bushings, tees and couplings may be and are all so made as to serve as reducers.

Pipe Screw Threads. Screw threads used for connecting wrought iron pipes together. Such screws are cut "tapered"; that is, the end of the pipe, or the inside of the coupling where the thread is cut, forms part of a cone, so that in screwing up the pipe a tight joint can be made. Pipe threads are of a V-shape, sharp at the top and bottom, and their sides stand at an angle of 60 deg. to each other. The following is the number of threads per inch for pipes of different sizes. The size is given by the inside diameter, but the actual bore of the smaller sizes is considerably larger than the nominal. The exterior diameter of ordinary gas pipe is from .27 to .37 inches greater than the inside diameter.

AMERICAN STANDARD SYSTEM OF PIPE THREADS.

Size of pipe.	Outside diameter. Ins.	Inside diameter Ins.	Inside diam. Extra strong. Ins.	Inside diam Double extra strong. Ins.	Threads per inch.	Whitworth's thread.
⅛ in.	.405	.27	.205		27	28
¼ in.	.54	.364	.294		18	19
⅜ in.	.675	.494	.421		18	19
½ in.	.84	.623	.542	.244	14	14
¾ in.	1.05	.824	.736	.422	14	14
1 in.	1.315	1.048	.915	.587	11½	11
1¼ in.	1.66	1.38	1.272	.884	11½	11
1½ in.	1.9	1.611	1.494	1.088	11½	11
2 in.	2.375	2.067	1.933	1.491	11½	11
2½ in.	2.875	2.468	2.315	1.755	8	
3 in.	3.5	3.067	2.892	2.284	8	
3½ in.	4.	3.548	3.358	2.716	8	
4 in.	4.5	4.026	3.818	3.136	8	
4½ in.	5.	4.508			8	
5 in.	5.563	5.045			8	
6 in.	6.625	6.065			8	
7 in.	7.625	7.023			8	
8 in.	8.625	7.982			8	
9 in.	9.688	9.001			8	
10 in.	10.075	10.019			8	

(The European standard is the Whitworth pipe thread, which is quite different.)

Taper of thread ¾ in. per foot.

Pipe Unions. In 1902 standard dimensions for pipe unions ⅛ to 4 inches, inclusive, were proposed for adoption by the American Railway Master Mechanics' Association, and, at the convention of 1903, the same were adopted as standard. These dimensions are shown in the accompanying table.

DIMENSIONS FOR STANDARD PIPE UNIONS.

1	2	3	4	5	6	7	8	9	10	11	12	13	14	15	16	17	18	19	20	21	22
⅛-inch..	.375	.270	.105	.59	.63	.78	.80	.85	.89	1.05	.26	¼	27	.2225	.08	.5625	½	.59	.615	.006	.05
¼ " ..	.496	.364	.132	.76	.80	.96	.98	1.05	1.09	1.29	.33	5/16	18	.2625	.10	.6925	9/16	.76	.76	.006	.06
⅜ " ..	.630	.494	.136	.90	.95	1.11	1.13	1.20	1.24	1.45	.34	⅜	18	.2825	.11	.7325	⅝	.90	.905	.006	.07
½ " ..	.783	.623	.160	1.16	1.21	1.38	1.40	1.49	1.54	1.78	.40	7/16	14	.3025	.12	.8225	11/16	1.03	1.20	.006	.08
¾ " ..	.992	.824	.168	1.38	1.43	1.61	1.63	1.72	1.77	2.02	.42	½	14	.3225	.13	.8725	¾	1.24	1.43	.007	.09
1 " ..	1.246	1.048	.198	1.74	1.79	1.98	2.01	2.13	2.19	2.49	.49	9/16	11	.3625	.15	1.0025	13/16	1.565	1.76	.007	.10
1¼ " ..	1.592	1.380	.212	2.12	2.18	2.37	2.40	2.52	2.58	2.90	.53	.6	11	.3825	.16	1.0725	.9	1.91	2.15	.007	.11
1½ " ..	1.831	1.610	.221	2.40	2.46	2.66	2.69	2.81	2.87	3.20	.55	.7	11	.4025	.17	1.1225	1.0	2.18	2.40	.007	.13
2 " ..	2.306	2.067	.239	2.89	2.95	3.16	3.19	3.31	3.38	3.74	.60	.8	11	.4225	.18	1.2025	1.1	2.66	2.90	.008	.14
2½ " ..	2.775	2.468	.307	3.39	3.45	3.67	3.70	3.86	3.93	4.39	.77	.9	8	.5225	.23	1.5225	1.2	3.16	3.41	.008	.16
3 " ..	3.401	3.067	.334	4.07	4.13	4.36	4.40	4.56	4.63	5.13	.84	1.0	8	.5625	.25	1.6525	1.3	3.81	4.08	.008	.18
3½ " ..	3.901	3.548	.353	4.61	4.68	4.91	4.95	5.11	5.19	5.72	.88	1.1	8	.6025	.27	1.7525	1.4	4.31	4.63	.008	.20
4 " ..	4.4	4.026	.374	5.15	5.22	5.47	5.51	5.67	5.75	6.31	.94	1.2	8	.6225	.28	1.8425	1.5	4.81	5.19	.008	.22

DESCRIPTION ACCOMPANYING TABLE OF MALLEABLE PIPE UNIONS.

NUMBERS AT THE HEAD OF THE COLUMNS ABOVE ARE THOSE GIVEN IN THE DIMENSION LINES ON TABLE A.

Column No. 1 in table represents the nominal diameter of pipe.

Column No. 2 represents diameter of pipe at one-half the height of full thread nearest solid section of pipe.

Column No. 3 represents the internal diameter of the pipe.

Column No. 4 represents the difference between columns Nos. 2 and 3, and is equal to twice the thickness of metal in pipe measured from inside line to one-half the height of thread, as specified before.

Column No. 5 represents the outside diameter of end of pipe union and is taken as *No. 2, plus twice No. 4*, plus an arbitrary increment.

Column No. 6 is equal to No. 5, plus an increment varying from .04 to .07 of an inch. This increment was allowed for the purpose of being able to slip the nut over upper swivel end of union.

Column No. 7 is No. 6, plus an amount varying between .15 and .25. This lip created is considerably in excess of what exists on present pipe unions for the reason that we find the surface between the lip and the corresponding part of the nut is often damaged, and the bearing surface, when the full strength of the man is used on the wrench, is sufficient. We assume that a man would pull about 30 pounds on a wrench, with a possibility of using less force on pipes of smaller diameter. For that reason we made a variation in the width of lip, which lip, theoretically, would be uniform for all sizes of pipe. The nut itself has been strengthened to prevent the lip from deflecting upward.

Column No. 8 is No. 7, plus an increment varying from .02 to .04 of an inch.

Column No. 9 is No. 8, plus twice the height of the thread.

Column No. 10 is No. 9, plus an increment varying between .04 and .08 of an inch.

Column No. 11 is No. 10, plus one and one-half times No. 4.

Column No. 12 is two and one-half times No. 4, and was figured especially for bearing surface, so that the thread would not wear away too rapidly when the nut is occasionally removed.

Column No. 13 has been assumed arbitrarily, but in all cases is greater than the length of full thread on standard pipe.

Column No. 14 represents the number of threads per inch in length of nut. This thread, we believe, should be United States Standard form and not sharp thread.

Column No. 15 is taken arbitrarily, but is based on the probable requirements of manufacturers for tapping out the nut.

Column No. 16 is three-fourths of No. 4.

Column No. 17 represents the full height of nut, and is equal to No. 12, plus No. 15, plus No. 16

Column No. 18 is the amount of projection outside of nut.

Column No. 19 is No. 2, plus No. 4, plus an arbitrary increment.

Column No. 20 is No. 7, less No. 16, with slight modifications.

Column No. 21 represents the clearance at several points, as indicated on print.

Column No. 22 is assumed arbitrarily.

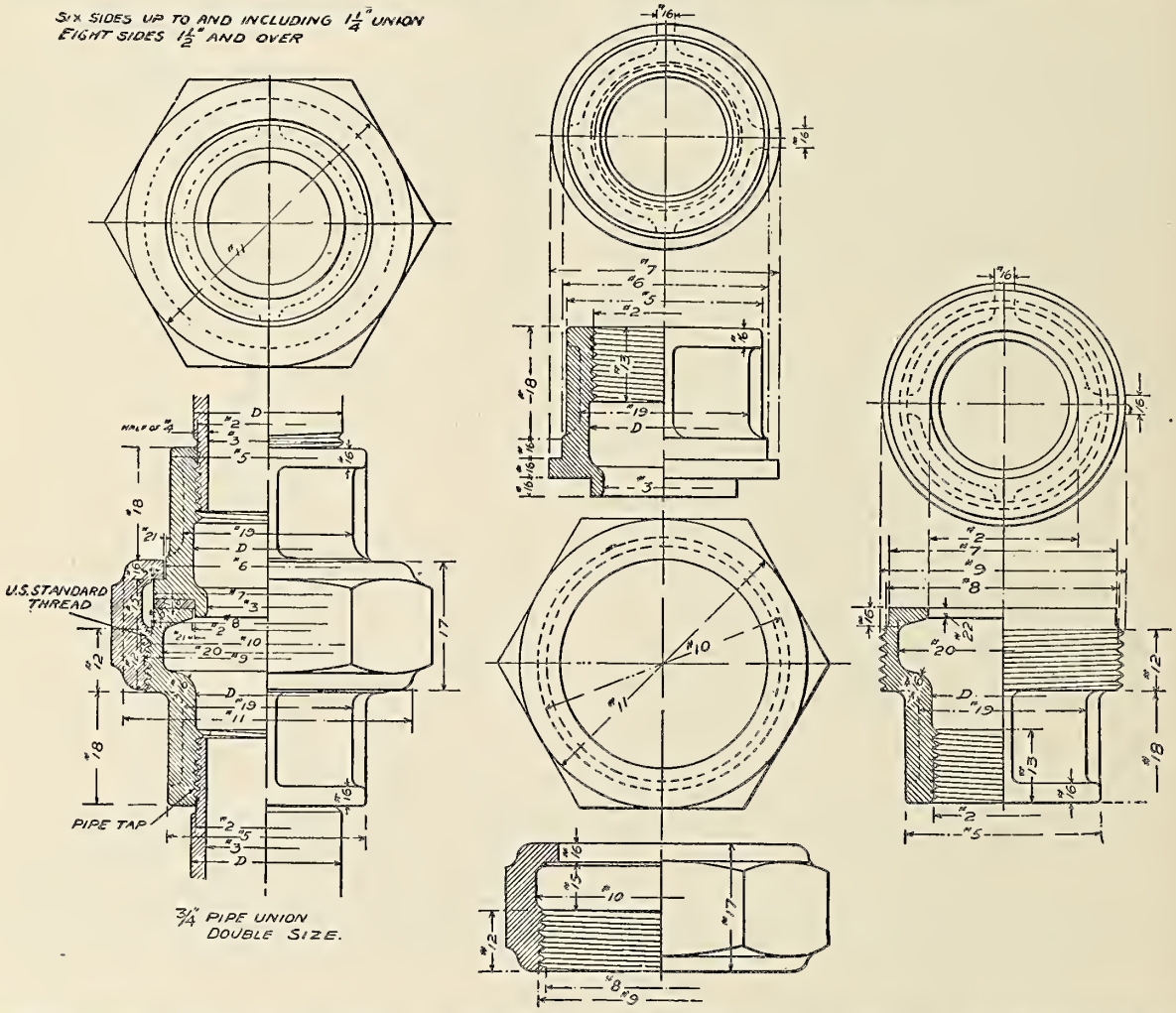

"Pipeless" Triple Valves (Air Brake). A triple valve arranged to have all pipe connections made in the cylinder head, reservoir, or bracket, to which it is attached, these connections being completed to the triple valve through suitable ports. This arrangement admits of the valve being removed without breaking any pipe joints.

Piston. Figs. 800-821; 5, Figs. 800-809. A metal disc with packing, etc., made to fit air or steam tight and work back and forth in a cylinder. The piston consists of a piston head, attached to a piston rod. The piston follower or follower plate lies at the back of the piston head, inclosing between them the piston packing rings, or (in air brake cylinders) the piston packing leather, which latter is provided with a packing leather expander. The follower plate is secured to the piston with follower bolts. All these parts are essentially the same in all the various cylinders shown, and for distinctness should be designated with the name of the cylinder within which they work. Recent design has developed a solid one-piece piston. See Rule 27, LOCOMOTIVES, INSPECTION AND TESTING.

Piston Clearance. The distance between the surface of a piston and the cylinder head at the extreme end of the stroke. Usually it is from ¼ to ½ inch.

Piston Follower. A circular plate fitted on that face of

a piston that is away from the rod and secured by bolts called follower bolts. By removing the follower it is possible to reach and adjust the packing springs by means of the bolts and nuts provided for that purpose.

Piston Follower Bolt. One of several bolts (with their heads countersunk in the follower) which fasten the piston follower to the piston.

Piston Head. 4, Figs. 800-809. The body of the piston exclusive of follower plate, rings, etc.

Piston Key. A flat wedge-shaped key passing through the center of a piston and the end of a piston rod to fasten them together.

Piston Nut. 7, Figs. 800-809. A nut screwed on the end of a piston rod to secure it to the piston. The rod is tapered in that part that passes through the piston and has a filler or collar that is drawn tight against one face of the piston when the nut is tightened up against the other.

Piston Packing Expander (Air Brake). A spring wire ring for spreading out the leather packing of the piston so as to make it air tight.

Piston Packing Leather (Air Brake). A circular ring of leather used as a substitute for Piston Packing Rings, which see, pressed into the cylinder so as to have an L-section, which is attached to and surrounds the piston and bears against the inside surface of the cylinder, being pressed against it by a round steel rod called the piston packing expander.

Piston Packing Ring. See Packing Ring.

Piston Ring. 6, Figs. 800-809; Fig. 826. A cast iron, brass or soft alloy ring, made slightly larger than the internal diameter of a cylinder and cut at one place so as to spring outward and fit snugly against the cylinder, and thus make an air or steam-tight joint. Two such rings are commonly used.

Piston Rod. 34, Figs. 101-140; Figs. 805-819; 3, Figs. 800-809. A wrought iron or steel rod secured at one end to the center of a piston and at the other to a cross-head. It is usually secured in place in the piston by a Piston Nut, which see, or by a key driven through the rod back of the piston. See Extended Piston Rod. See Rule 27, Locomotives, Inspection and Testing. (Brake Cylinder.) A rod attached to the piston of a brake cylinder, by means of which the pressure against the piston is transmitted to the brake levers and shoes. See Brake Cylinder Piston Rod.

A tube attached to the piston of a tender brake cylinder to act as a guide to the piston as it is forced outward by the air pressure. In this case a Push Rod, which see, is attached to the levers and is enclosed by the tube. The push rod transmits the pressure on the piston to the levers and brake shoes, while it allows an application of the brakes by hand without pulling out the piston.

Piston Rod Guide. 289, Figs. 101-140; Figs. 608, 823, 824. A casting attached to the front cylinder head of a locomotive to form a support for a piston rod extending through the front cylinder head. Extended piston rods are used to prevent the weight of large pistons from wearing the cylinders unevenly. See Extended Piston Rod.

Piston Rod Nut. See Piston Rod.

Piston Rod Packing. See Packing.

Piston Rod Stuffing Box. A cylindrical, cup-shaped receptacle surrounding the piston rod on the head of an air or steam cylinder for the purpose of holding piston rod packing.

Piston Rod Swab. Fig. 825. Soft packing held in place by a cylindrical cup surrounding the piston rod and adjacent to the stuffing box. Its purpose is to lubricate and at the same time keep the rod clean.

Piston Staybolt. A short rod or rivet used to strengthen a hollow cast piston.

Piston Stroke. The linear distance traversed by a piston from one end of a cylinder to the other.

Piston T-Ring. 57, Figs. 648-761. A cast iron ring of T-section, usually shrunk on a piston to hold the packing rings. Called also a bull ring.

Piston Travel (Air Brakes). The amount of movement of the piston when forced outward as the brakes are applied. Running piston travel is the piston travel obtained when the tender is in motion and is always greater than the travel obtained when the tender is at rest, due to the fact that the slack or lost motion in trucks and brake gear as well as the elasticity of the frame is more easily taken up by the brake shoe pressure when the tender is in motion. False travel is that due to some unevenness of the track or to some cause which occasions a momentary change.

Piston Valve. Figs. 666-671, 677, 685, 687; Figs. 688, 689, 695, 697-700. A spool-shaped casting of iron or steel, moving backwards and forwards in a cylindrical valve chamber formed in a steam chest, for admitting steam to and exhausting it from a locomotive cylinder. It is operated by valve gear in the same manner as an ordinary slide valve. Piston valves are fitted with metal snap rings to insure a steam tight fit in the bushing of the valve chamber. They are of either the inside or the outside admission types. An inside admission valve takes steam from the steam pipe into its central cavity, between the ends, and admits it to the steam passages leading to the ends of the cylinder; the exhaust steam from the cylinder being in contact with the ends of the valve. An outside admission piston valve uncovers the ports leading to the cylinder in the same manner as a slide valve and the exhaust steam passes through the internal cavity of the valve before entering the exhaust pipe. The inside admission type is the more common. Its advantages over the slide valve are its better balancing, and consequently smaller resistance to being moved, and a better distribution of steam at high piston speeds. In four-cylinder compound locomotives, where one valve is employed for a high and a low-pressure cylinder on each side of the engine, a piston valve is the only kind of valve that experience has shown to be practicable.

Pivot. A pin or short shaft on which anything turns.

Pivot Pin (M. C. B. Coupler). 10, Figs 1052-1056. Another name for the Knuckle Pin, which see. So called from the fact that the knuckle when opening swings about the pin as a pivot.

Planished Iron. One of the attempted substitutes for Russia iron. One of many processes consists of the formation of an oxidized surface on each sheet over and above the surface secured in ordinary working. The oxidized surface is then reconverted into metallic iron, which will enter readily into combination with an oxidizing agent applied throughout. The surface thus given to the sheet is fixed by planishing or hammering

until the desired polish is secured. It is extensively used for the jackets of locomotive boilers.

Plain Triple Valve (Air Brake). Fig 1443 A triple valve which has no quick action feature for hastening the emergency application throughout the train. See Triple Valve.

Plank. A broad piece of sawed timber differing from a board only in being thicker.

Plate (of a Cast Car Wheel). The central portion connecting the hub and tread, sometimes single plate, sometimes double plate. The plate is stiffened by brackets. See Wheel and Face Plate (Steel Tired Wheel.)

Plate Washer. Usually a wrought iron cut washer, in distinction from a cast washer, but also used to designate many forms of large washers or plates serving as double or triple washers. See Washer.

Plate Wheel. A wheel of which the center portion is formed of a disk or plate instead of spokes. Varieties are the single, double, open and combination plate wheel. See Wheel.

Plug. A cylindrical or conical piece, either smooth or threaded, fitting into a hole, tube, pipe, or valve body.

Plug Cock. A stop cock having a plug or key with a hole or slot through it and a handle for turning it so as to allow a fluid to pass through.

Plug Connector (Air Brake). The term applied to the jumper and receptacle used in connection with electro-pneumatic signal and brake equipment, and which provides flexible electric connections between cars for the electric operation of these equipments.

Plugging Bar. A steel bar long enough to extend completely through a firebox, with one end so arranged as to hold a plug or stopper which may be inserted in one of the tube openings in the tub sheet to stop the escape of steam and water in case a tube leaks or bursts.

Pneumatic Blow-off Cock. Figs. 344-346. A blow-off cock operated by compressed air.

Pneumatic Fire Doors. Figs. 231, 232, 235-240. Fire doors operated by compressed air.

Pneumatic Reversing Gear. See Power Reverse Gear.

Pneumatic Sanders. Figs. 1633-1650. A device for placing sand on the rail by means of compressed air.

Poker. A long bar used to stir a fire and break up the fuel.

Pole Piece. A mass of iron connected with the poles of the field magnet frames of dynamo-electric machines and shaped to conform to the outline of contour of the armature.

The pole pieces are made in a variety of forms, but in all cases are so shaped as to conform to the outline of the space in which the armature rotates. They are brought as near as possible to the armature so as to increase the intensity of the magnetic induction. The intervening air space should be as thin as possible, but of as large an area as convenient. (Houston.)

Pony Truck. Figs. 976-985. A two-wheel swiveling truck used under the front end of mogul, Prairie, consolidation, Mikado and other types of locomotives. See Truck.

Pop Safety Valve. Figs. 349-360. A valve set with a spring so as to open suddenly with a wide opening at a fixed pressure and close suddenly when the desired drop in pressure is reached; hence the name. They are frequently muffled to deaden the noise of escaping steam, by causing it to take a tortuous passage through perforated plates to the atmosphere.

Port. An opening, usually rectangular, in the face or chamber of a valve. In locomotive cylinder castings the ports opening into the steam passages leading to the cylinders and those opening into the exhaust passages are rectangular apertures in the valve seat or valve chamber, according as the locomotive has slide or piston valves. See Steam Port and Exhaust Port.

Port Cock. A faucet screwed into the bottom of a cylinder saddle to allow water to escape from the steam and exhaust passages. It is operated by an arm sometimes, but not always, connected to the cab by a rod. Also sometimes actuated by the cylinder cock rigging. See Cylinder Cock.

Port Cock Arm. A piece of metal attached to the shank of the port cock to open and close it.

Port Cock Lever. A lever placed in the cab to operate the rod attached to the port cock rigging.

Port Cock Shaft. A transverse shaft forming part of the port cock rigging.

Power Reverse Gear. Figs. 775-777, 780-784, 789. Primarily an engine connected to the valve motion by rods for the purpose of moving the valve gear as desired by the engineman. On the large power now in use it is difficult for the engineman to move the reverse lever and reverse the engine, but the power reverse accomplishes this result without effort on the engineman's part.

Power Reverse Gear Cylinder. 291, Figs. 101-140; Fig. 782; 1, Fig. 789. A cylinder fitted with a piston to which air or steam is admitted for operating the power reverse gear.

Power Reverse Lever. Fig. 793. A lever for controlling the operation of the power reverse gear. In some designs it is attached to the reverse lever and operates in the usual manner. Also called auxiliary reverse lever.

Power Reverse Piston. Fig. 778. The piston in the power reverse operating cylinder.

Prairie Type Locomotive (2-6-2). Figs. 1, 28-29, 108. A locomotive having a two-wheel front truck, three pairs of coupled driving wheels and a two-wheel trailing truck. Used for heavy fast freight and passenger service.

Pre-Admission. The opening of a steam port to admit steam to one end of a cylinder while the piston is still moving toward that end of the cylinder. See Admission.

Pre-Release. The opening of communication between either end of a cylinder and the exhaust port before the piston reaches the end of its stroke. See Release.

Pressure Gage. Figs. 1186-1200. A device for indicating the pressure in a boiler or air reservoir. Usually placed in the cab and illuminated by a gage lamp. Three gages are commonly mounted in a locomotive cab to indicate boiler steam pressure, train line steam heat pressure, and brake pipe and main reservoir air pressure.

Pressure Head (Brake Cylinder). The head that covers the end of the brake cylinder into which air pressure is admitted when the brakes are applied.

Pressure Regulator. Figs. 1243, 1245, 1250, 1264-1266; Figs. 1268, 1285, 1288. A valve designed to regulate the delivery pressure of steam and other gases or fluids.

Pressure Retaining Valve (Air Brake). Figs. 1451-1476; Fig. 1541. A device by means of which a certain part of the brake cylinder pressure may be retained to aid in retarding the acceleration of a train in descending long grades while the brake pipe pressure is increased after one application to recharge the auxiliary reservoirs. It is controlled by a small handle, the position of which causes it to operate or not, as desired. Also called retaining valve. See Air Brake and Train Air Signal Instructions.

Priming (Painting). The first coat in tender or cab painting.

Pull Bars. See Water Pull Bar Grate.

Pull Rod. Any rod or slender bar used to connect an arm or lever with the cab for convenience of operation, as sand box rod, cylinder cock rod, etc.

Pulverized Fuel. Figs. 281-286. Solid fuels such as coal, lignite or peat, are prepared at the general coaling stations by drying and grinding through the usual methods. This preparation reduces the moisture to 1 per cent or less and prepares the fuel so that not less than 95 per cent will pass through a 100 mesh screen and not less than 85 per cent will pass through a 200 mesh screen, which is the usual specification for commercial pulverized fuel. In this form the solid fuel will readily flow and can be easily conveyed by gravity into the enclosed fuel container on the locomotive tender. From this fuel container it is conveyed to the firebox, where, on account of the dryness and fineness of the fuel, it immediately flashes into flame and produces practically perfect combustion by burning in suspension.

Pump Governor (Air Brake). Figs. 1610, 1611, 1422, 1497, 1499. (Single Pressure Governor.) A device to be attached to the steam inlet of the air compressor, or placed in the steam pipe leading to the compressor, to automatically cut off the supply of steam to the compressor when the air pressure in the main reservoir reaches a fixed maximum, usually either 90 or 130 pounds. It obviates the unnecessary working of the compressor after the desired air pressure has been attained.

(Duplex Governor.) Figs. 1423-1424, 1498, 1500, 1501. A device similar to the single pressure type, except that it has two regulating portions so as to stop the compressor at either one of two pressures, depending on which regulating portion is brought into action. It also allows a higher main reservoir pressure to be obtained during brake applications than at other times, thereby insuring a prompt release and recharging of the brakes. More properly called Compressor Governor. See also Electric Compressor Governor.

Push Bar (Air Brake). Usually called push rod. A compression bar which bears against the piston of a brake cylinder, being guided by a hollow piston rod in such manner as to transmit the pressure of the piston when the air brake is used, but to simply move away from the piston, without moving the latter, when brakes are applied by hand.

Push Block. See Push Pole Corner Plate.

Push Rod (Tender Brake). Figs. 1597, 1600. A round steel bar which transmits the air pressure against the piston of the brake cylinder to the levers and to the brake shoes. It has a crosshead formed on one end by which it is attached to the cylinder lever. It is guided by the hollow piston rod and transmits the pressure when the air brake is used. When hand brakes are used it simply moves away from the piston without moving it.

Push Pole. Fig. 2304. A pole or wrought iron tube which is used as a strut to span diagonally the distance between the corners of a locomotive and a car, standing on two parallel tracks, and which is used to push the car without switching the locomotive onto the same track that the car occupies.

Push Pole Bracket. See Pilot Shoe.

Push Pole Corner Plate or **Iron.** A plate located on the rear corners of the tender or on the front bumper beam of the locomotive, for inserting a pole or bar for switching so as to enable the locomotive to move a car on a parallel track. It is usually a cavity cast upon the corner plate or pilot beam and not a separate attachment.

Pyrometer. See Superheater Pyrometer.

Q

Quadrant. 1, Figs. 762-772. A notched sector along which the reverse lever moves and which, by means of a latch, holds the lever at any particular point to regulate the point of cut-off in the cylinders. Used also for a throttle lever. See Reverse Lever Quadrant.

Quick-Action Air Brake. Figs. 1400, 1402. A system now almost universally used, equipped with quick-action triple valves to permit the rapid, successive application of brakes throughout the train. See Triple Valve.

Quick-Action Triple Valve (Air Brake). See Triple Valve.

Quill. See Armature Quill.

R

Rack. A frame for receiving various articles.

"In machinery, a rectilineal sliding piece, with teeth cut on its edge for working with a wheel."—Brande. See Ratchet.

Rack Locomotive. Figs. 93, 144. A locomotive for climbing grades too steep for good adhesion. It runs on rails as other locomotives, and on moderate grades the adhesion of the driving wheels is sufficient, but on the steepest grades a rack rail is laid between the two running rails and engages with gears keyed on the center of the driving axle, thus giving a positive tractive effort. The boiler is mounted so as to preserve a uniform water level when the locomotive is climbing a steep grade. Rack locomotives are provided with powerful air, hand and water brakes to prevent runaways down grade.

Radial Stay. 12, Figs. 152-186. In most boilers the crown sheet of the firebox is supported by a number of rods or stays passing through the roof sheet and riveted over. The firebox end usually has a button head. Flexible radial stays are used where the liability of breakage due to expansion is greatest. These stays are set radially to the curvature of the crown and roof sheets, hence the name.

Radial Stay Boiler. Fig. 155, etc. A boiler having a transversely arched crown sheet, supported from the roof sheet by stays or stay bolts set on lines that are radii of curvature of the inner and outer sheets.

Radial Truck. Figs. 1014-1025. A two-wheel engine truck, either leading or trailing, which is free to turn about a pivot on the center line of the locomotive, to which it is attached by Radius Bars.

Radius Bar. 147 and 10, Figs. 976-987; Figs. 976, 987; 8, Figs. 1014-1020. On locomotives having a two-wheel leading or trailing truck, one of two heavy beams forming a triangular frame, the apex of which is pivoted on a transverse brace secured to the frames back of the cylinder saddles or under the firebox. The outer ends of the radius bars are fastened to the side frames of the truck.

The bar extending from the valve stem to the link of the Walschaert valve gear, taking the place of the ordinary valve rod. More generally called Radius Rod. See Valve Gear.

Radius Bar Brace. 11, Figs. 976-987. A brace riveted to the radius bar near its pivot and secured at its outer end to the bottom of the truck pedestal.

Radius Bar Crosstie. Fig. 568; 13, Figs. 976-987; Fig. 988. A heavy iron bar riveted across the frames back of the center line of the cylinders or under the firebox, and having a pivot or center pin on which the radius bar, and with it the truck, can swing.

Radius Bar Pin. The pivot on which the radius bar turns.

Radius Rod (Walschaert Valve Gear). 260, Figs. 101-140; Figs. 722, 724; Fig. 727. Also called radius bar. A steel bar or rod attached at one end by a pin to the upper end of the Combination Lever, which see, and at the other to the link lifter on the reverse shaft arm. It also carries the link block, at a point near to the point of attachment to the lifting link.

Radius Rod Lifter. A bar pivoted at one end to the radius rod and at the other to the reverse shaft arm, and by means of which the radius rod and link block are moved.

Ratchet. A serrated edge like that of a saw, sometimes straight and sometimes on a wheel, into which a pawl engages, for producing or (more commonly) restraining motion. See Brake Ratchet Wheel.

Ratchet Wheel. A wheel with teeth like a saw cut into the outer edge to engage with a Pawl, which see, which prevents the wheel from being turned in one direction while allowing it to turn in the opposite direction. See Brake Ratchet Wheel.

Reach Rod. 25, Figs. 697-701; 126, Figs. 101-140; 13, Figs. 762-772. A bar reaching from the reverse lever to the reverse shaft arm. Sometimes made of pipe.

Reach Rod Jaw. 14a, Figs. 762-772; Fig. 772. The end of a reach rod fitted to take the reverse lever or the reverse shaft arm.

Reach Rod Reverse Screw Nut. A nut threaded to fit the reverse screw and attached to the reach rod, and through which the reach rod is moved when the reverse screw is revolved.

Reading Type Lcomotive (4-4-4). Figs. 2, 57, 123. A locomotive having a four-wheel front truck, two pairs of coupled driving wheels and a four-wheel trailing truck. Used for heavy fast passenger service.

Rear End Hand Holds. See Safety Appliance Standard.

Rear Frame. 121, Figs. 101-140; 9, Figs. 504-508. The back end of a frame over the trailing truck. Either made as a separate piece or as a part of the main side frame.

Rear Frame Separator. 10, Figs. 504-508. A casting or thimble placed between the two members of a rear frame to keep them in position relative to each other.

Receiver Pipe. 293, Figs. 101-140; Figs. 307, 314. In cross-compound locomotives, a pipe conveying exhaust steam from the high-pressure steam chest to the low-pressure steam chest. In Mallet compound locomotives a pipe conveying exhaust steam from the high-pressure cylinders to the low-pressure cylinders and connected to the two-cylinder saddles by ball and slip joints which allow considerable flexibility when the locomotive passes through curves and over rough track.

Receiver Pipe Ball Joint. Fig. 312. The joint between the receiver pipe and the cylinder saddle. The end of the receiver pipe is made with a spherical sleeve and fits into a spherical seat, held in place by a gland. The surfaces of the joint are ground and made steam tight and at the same time allow considerable motion of the receiver pipe when the engine is passing through curves or over uneven track. Used on Mallet locomotives. In some designs the end of the receiver pipe is cast solid without the separate sleeve.

Receiver Pipe Casing. Figs. 310, 313. A casing or jacket made of sheet metal or sectional castings fitted around the receiver pipe and receiver pipe connections for the purpose of protecting the lagging.

Receiver Chamber. A steam passage in the cylinder saddle for receiving the exhaust steam to be conveyed to the low-pressure cylinders and to which the receiver pipe is connected.

Receiver Chamber Cover. Fig. 323. A circular cover or head bolted to the opening in the cylinder saddle to the receiver chamber.

Receiver Chamber Cover Casing. Fig. 323. A sheet metal casing over the receiver chamber cover for holding the lagging in place.

Receiver Pipe Connection. 299, Figs. 101-140; Figs. 310, 313. A section of the receiver-pipe used to convey the exhaust steam from the right-hand high-pressure cylinder to the receiver chamber in the left high-pressure cylinder saddle. Another section is made in the form of a tee and is used to convey the exhaust steam from the receiver pipe to the right and left hand low-pressure cylinders. A slip joint connects the end of the receiver pipe to the receiver pipe connection.

Receiver Pipe Flange. An extension or edge around the end of a receiver pipe for the purpose of bolting the pipe to another section.

Receiver Pipe Ring. A metal ring fitted to the end of a receiver pipe and having one side ground to a hemispherical surface. Where the receiver pipe is in several sections, the ring is made with two hemispherical surfaces making a steam-tight joint where the sections of pipe are joined together.

Receiver Pipe Slip Joint. See Steam Pipe Expansion Joint.

Receiver Pipe Support. A casting secured in the smokebox to hold a receiver pipe.

Reducer (Pipe Fittings). A means of decreasing diameter of the pipe used. They are either Bushings, Couplings or T's.

Reducing Tee or **T** (Pipe Fittings). See also Reducer and T. A pipe fitting having three openings, one of which is smaller or larger than the other two.

Reducing Valve. 1, Figs. 609-612; Fig. 617. A valve for air or steam that receives the fluid at a certain pressure and delivers it at a predetermined lower pressure. Used for the live steam connection to low-pressure cylinders on compound locomotives, for the

steam heat pipe for train heating, automatic reducing valve for high speed brake and air signal reducing valve. See Intercepting Valve, Automatic Reducing Valve.

Reducing Valve Pipe (Air Brake). The pipe which connects the reducing valve with the independent brake valve.

Regulating Nut (Compressor Governor). A cap nut in the top of an air pump governor which can be screwed up and down to alter the tension of the Regulating Spring.

Regulating Spring (Compressor Governor). A spiral spring in the upper part of an air compressor governor, which by its tension holds a piston to which the pin valve is attached on its seat until the main reservoir pressure rises to such a point that it forces the piston up, overcoming the tension of the spring, opening the pin valve, and as a result, closing the steam supply to the compressor.

Regulator. See Reducing Valve.

Reheater. A device by means of which the heat in the waste gases from the fire tubes can be imparted to the exhaust steam from the high pressure cylinders as it passes to the low pressure cylinders and thus raise its temperature and prevent condensation losses. Used on Mallet compound locomotives. The receiver pipe is carried up through the boiler shell from the high-pressure cylinders and terminates in a header. Several small tubes are carried forward from this header to another header connecting to the receiver pipe which leads to the low-pressure cylinders. The small tubes present a large surface area to the action of the gases on their way to the smokebox and allow the exhaust steam to absorb heat before doing work in the low-pressure cylinders.

Reheater Flue. A large flue in the forward part of a boiler in which the reheater is placed and through which the gases from the firebox pass on their way to the smokebox.

Release. The position of the valve in which either end of the cylinder is in communication with the exhaust port and thereby releases the steam from the cylinder. See Pre-Release.

Release Cock. See Release Valve.

Release Spring (Tender Trucks). A spring attached to the end piece of a truck for the purpose of throwing the brakes out of contact with the wheels. The name is also applied to any spring used to throw the brake off from the wheels, either drivers or engine truck.

(Brake Cylinder.) A spiral spring coiled around the piston rod and compressed when the piston moves out to apply the brakes. It moves the brake piston inward, and thus releases the brakes from the wheels after the compressed air is allowed to escape from the cylinders.

Release Valve (Air Brake). More properly an auxiliary reservoir bleeding valve. A cock attached to the auxiliary reservoir for permitting the air pressure to be reduced therein, when the locomotive is detached or when the apparatus is out of order, so as to release or "bleed" the brakes.

Release Valve Rod. A rod extending from the release valve on the auxiliary reservoir to the side of the tender to operate the release valve.

Relief Valve. 141, Figs. 101-140; Figs. 615, 616, 618, 620. 622, 628. A valve screwed into a cylinder head or steam chest, and having a disk held to its seat by a spring whose tension is so adjusted that the valve will lift in case an accumulation of water or an abnormal pressure of steam occurs. Also called cylinder head relief valve and water relief valve.

Reports. See Boiler Inspection.

Reservoir. 156, Figs. 101-140; Fig. 1417. A receptacle, usually cylindrical, in which air is compressed and stored for the air brake and signal system. A locomotive is generally, but not always, equipped with two main reservoirs, brake valve reservoir, and driver brake, truck brake, and tender brake auxiliary reservoirs. See Air Brake and Main Reservoir, Auxiliary Reservoir. Also Equalizing Reservoir.

Reservoir Drain Cock (Air Brake). Fig. 1425. A cock for emptying the reservoir of any water condensed from the compressed air.

Reservoir Hanger. 180, Figs. 101-140. An iron strap riveted to the lower side of the running board, or to the boiler, to support the reservoir.

Reservoir Pipe (Air Brake). The pipe that conveys the compressed air from the main reservoirs to the brake apparatus.

Resistance. The property of an electric conductor which opposes the passage of an electric current through it. The reciprocal of Conductivity.

A coil or length of metallic wire or ribbon or a volume of water or oil, having high relative resistance, interposed in an electric circuit to reduce the amount of current flowing through it. See Rheostat.

Resistor. See Control System.

Retaining Ring (for Wheel Tires). 12, Figs. 897-907. A ring securing the tire to the wheel center. See Double Lip Retaining Ring, Mansell Retaining Ring and Tire Fastening.

Retaining Valve. See Pressure Retaining Valve.

Return Bend (Pipe Fittings). A short cast-iron or other metal U-shaped tube for uniting the ends of two wrought-iron pipes. They are called close return bends, or open return bends, according as the section of the pipe is kept a distinct circle at all points. The close return bend has simply a partition dividing the two parts for a short distance.

Reverse Gear. Figs. 751-799. The mechanism by means of which the direction of a locomotive is reversed. See Valve Gear. See Rule 57, Locomotives, Inspection and Testing.

Reverse Indicator. Fig. 777. An indicator attached to the screw reverse apparatus in the cab for the purpose of showing position of the block in the link or the position of piston at cut-off.

Reverse Lever. 125, Figs. 101-140; 23, Figs. 697-701; 5, Figs. 762-772; Fig. 773. A lever pivoted to the frame or the foot plate and connected by means of the reach rod and reverse arm to the link of the valve gear for moving the link and thereby either reversing the motion of the engine or causing the valves to cut off steam at any desired point. It is arranged to move along a notched sector or quadrant, in any one of whose notches it can be latched. Sometimes made in two pieces, fastened together. On British locomotives the reversing mechanism commonly consists of a hand wheel on a shaft having a worm gear which moves an arm attached to the reach rod. See Power Reverse Gear.

Reverse Lever End. 124, Figs. 101-140; Figs. 774, 794. A

casting to which the reverse lever is attached and containing the bearing for the fulcrum pin. It frequently has an arm to which the reach rod is attached. Also called reverse lever bracket.

Reverse Lever Foot Rest. 2, Figs. 762-772. An inclined step or brace attached to the reverse lever quadrant or other convenient place, against which the engineman can place his foot when moving the reverse lever.

Reverse Lever Fulcrum. Figs. 767, 770, 796. A casting having lugs or jaws and holding the lower end of a reverse lever by a pivot. The fulcrum is secured either to the deck plate or to the frame.

Reverse Lever Fulcrum Pin. Fig. 767. The pivot passing through the lower end of a reverse lever and holding it in place of the fulcrum.

Reverse Lever Handle. The upper end of a reverse lever, which is grasped by an engineman.

Reverse Lever Latch. 6, Figs. 762-772. A catch or detent having to tooth or bolt held in place by a latch box through which it passes, and forced into a notch in the reverse lever quadrant by means of a spring. It locks the reverse lever in any desired position along the quadrant.

Reverse Lever Latch Box. A box-shaped piece fastened to the reverse lever to hold the latch bolt, which passes through it.

Reverse Lever Latch Gib. A steel wedge or strip in a reverse lever latch box, held in place by a set screw or thumb screw, to form a guide for the latch bolt.

Reverse Lever Latch Handle. 8, Figs. 762-772; Fig. 763. A handle pivoted to the reverse lever handle and connected to the reverse lever latch connection. It controls the reverse lever latch.

Reverse Lever Latch Link or Connection. 7, Figs. 762-772. One or two small rods fastened to the reverse lever latch at one end and to the latch handle at the other for the purpose of lifting the latch out of a notch in the quadrant when the latch handle is grasped and pressed up against the reverse lever handle.

Reverse Lever Latch Spring. 9, Figs. 762-772. A small coil spring for holding the reverse lever latch in mesh with the quadrant teeth.

Reverse Lever Quadrant. 132, Figs. 101-140; 24, Figs. 697-701. A steel bar or bars forming an arc of a circle, over or along which the reverse lever moves. It is secured to the frame or deck plate or to the side of the boiler, and has notches cut in its upper surface for the reverse lever latch.

Reverse Lever Quadrant Bracket. 133, Figs. 101-140; 3, Figs. 762-772. A lug secured to the side of the boiler to serve as a bracket, to which the quadrant is bolted.

Reverse Lever Quadrant Stand. A standard secured to the deck plate and having a lug or projection on its upper end, to which the quadrant is bolted.

Reverse Lever Slot Plate. A piece of metal having a narrow longitudinal opening in it fastened to the floor of a locomotive cab to allow the reverse lever to pass through. A slot plate is used in designs where the reverse lever fulcrum is attached to the frame and is below the cab floor.

Reverse Screw. 281, Figs. 101-140. A worm screw forming part of the screw reverse gear and to which the reach rod is attached by a nut.

Reverse Screw Gage. A metal plate fastened to the reverse screw support, graduated to show the inches of cut-off in the cylinder for any position of the gear.

Reverse Screw Latch. A latch secured to the reverse screw support and engaging in teeth on the reverse screw, in order to lock the screw in any desired position.

Reverse Screw Support. 283, Figs. 101-140. A casting securely bolted to the boiler and containing bearings in which the reverse screw is supported.

Reverse Screw Wheel. 282, Figs. 101-140. A wheel secured to one end of the reverse screw, by means of which the engineman revolves the screw and thus reverses the engine.

Reverse Shaft. 68, Figs. 101-140; 12, Figs. 648-761; 26, Figs. 697-701; Fig. 755, 756, 788. A transverse shaft resting at each end in bearings or boxes bolted to the frames. The upper reverse arm, secured to one end of this shaft, rotates it when the reverse lever and reach rod move. The reverse shaft carries also two arms, one near each end, from which the link lifters or radius bar lifters are suspended. Called also lifting shaft and tumbling shaft.

Reverse Shaft Arm. 27, Figs. 697-701; 66, Figs. 101-140; 13, Figs. 648-761. The levers or arms on a reverse shaft to which the link lifters are attached.

Reverse Shaft Bearing. 31, Figs. 697-701; 69, Figs. 101-140; 27, Figs. 648-761; Fig. 761. A casting bolted to the frames on each side, with a cap bolted on, furnishing a bearing for the ends of the reverse shaft.

Reverse Shaft Bearing Bushing. A bushing or sleeve in the reverse shaft bearing, usually case hardened, and forming the actual bearing for the reverse shaft.

Reverse Shaft Bearing Cap. Fig. 761. A cap or cover bolted on top of a reverse shaft bearing.

Reverse Shaft Box Bolt. A bolt holding the reverse shaft box or bearing in place on the frame.

Reverse Shaft Lever. 67, Figs. 101-140. The lever or arm on a reverse shaft to which the reach rod is attached.

Reverse Shaft Pin. A pivot or pin on the lower arm of a reverse shaft, and on which the upper end of the link lifter is secured.

Reverse Shaft Reach Rod. See Reach Rod.

Reverse Shaft Reach Rod Guide. 276, Figs. 101-140. A guide, strap or keeper through which the reach rod passes, to hold it in place. Usually secured to the running board or the side of the boiler.

Reverse Shaft Reach Rod Pin. 14, Figs. 762-772. A pin or pivot connecting the reach rod with the reverse shaft arm.

Reverse Shaft Counterbalance Spring. 30, Figs. 697-701; 17a, Figs. 648-761; Figs. 757, 765. A half elliptic or helical spring, attached to a lug or short arm on the reverse shaft. The tension of the spring balances the weight of the links and eccentric rods and assists the engineman in moving the reverse lever.

Reverse Shaft Counterbalance Spring Bracket. A transverse iron brace bolted to the frames to hold the reverse shaft spring. Called also reverse spring bracket.

Reverse Shaft Cunterbalance Spring Casing. 88, Figs. 101-140. A cylindrical cover or housing for a coil or helical reverse spring.

Reverse Shaft Counterbalance Spring Lug. 15, Figs. 648-761. A lug attached to the center of a reverse shaft for the attachment of the spring rod by means of a pin.

Reverse Shaft Counterbalance Spring Nut. A nut on the reverse spring rod to adjust the tension exerted by the spring on the reverse shaft.

Reverse Shaft Counterbalance Spring Pin. A bolt holding one end of the spring rod securely to the spring lug.

Reverse Shaft Counterbalance Spring Rod. 87, Figs. 101-140; Fig. 769; 17, Figs. 648-761. A rod fastened to a reverse shaft spring and connecting it with the lug on the shaft arm.

Reverse Spring. See Reverse Shaft Counterbalance Spring.

Reverser. Fig. 2210. See Control System.

Reversing Cock (Air Brake). Fig. 1465. A special form of cock used with the high-speed brake and double-pressure control equipments, for the purpose of throwing the control of brake pipe pressure on to either one of the two slide-valve feed valves attached to its sides. One feed valve is set for a low-brake pipe pressure, and the other for a high. The reversing cock is connected by piping to the brake valve in such a way that when feeding up the brake-pipe pressure the air must pass through the reversing cock and one of the feed valves before going to the brake pipe. The feed valve through which it passes depends on the position of the reversing-cock handle.

Reversing Cock Pipe Bracket (Air Brake). A bracket arranged for pipe connections which bolts to the brake valve in place of the slide valve feed valve, and is connected by piping with the Reversing Cock. Often called a feed-valve pipe bracket.

Reversing Cylinder. 1, Fig. 789; Fig. 782. A cylinder fitted with a piston to which air or steam is admitted for operating the power reverse gear.

Reversing Cylinder Piston. Figs. 778, and Fig. 789. The piston in the operating cylinder of a power reverse gear.

Reversing Cylinder Support. Fig. 792. A casting bolted to the boiler, forming a bracket, to which the power reverse cylinder is secured.

Reversing Oil Cylinder. 10, Fig. 789. A cylinder fitted with a piston connected to the reversing cylinder piston, and filled with oil, for the purpose of retarding the motion of the reversing cylinder piston, to prevent the too rapid movement of the reverse gear.

Reversing Valve (Air Compressor). A slide valve operated by the reversing rod in a small cylinder in the top head, which controls the admission and exhaust of steam to the chamber back of the large main valve piston thereby causing the main valve mechanism to operate. See Reversing Valve Rod.

Reversing Valve Bush (Air Compressor). The bushing which is inserted in the top head and forms the seat for the reversing valve. See Bushing.

Reversing Valve Chamber Cap (Air Compressor). A screw plug by means of which access is had to the reversing valve chamber and reversing valve.

Reversing Valve Rod or Stem (Air Compressor). A slender steel rod attached to the reversing valve of an air compressor. It passes through the steam cylinder from top to bottom, inside the piston rod, which is made hollow to allow this. The reversing valve plate on the steam piston also fits loosely around the reversing valve rod, and at the top of the cylinder it strikes a lug on this rod, thereby lifting the rod when the piston has reached the end of its stroke. This movement causes the reversing valve to admit or release steam pressure back of the large main valve piston, and by this means move it and the main slide valve with it, thereby admitting steam above the piston and starting it on its downward stroke.

Rheostat (Electric Locomotive). Fig. 2223. A resistance used in connection with the controller for limiting the current taken by the motors during acceleration. Usually consists of a number of iron grids or strips of iron ribbon properly connected together and packed in a substantial frame, the whole being mounted in groups along the sides and near the ends of the cab of the locomotive.

Rib (of a Cast Iron Wheel). See Bracket.

Riegel Firebox. Figs. 197-199, 287. A firebox with a nest of water tubes on each side and connected between the crown sheet and side sheets. The object of the water tube construction is to obtain an improved circulation as well as to locate the heating surface to the greatest advantage.

Rigid Wheel Base. The horizontal distance between the centers of the first and last axles of a locomotive, which are held rigidly in alignment with respect to each other. The truck wheel base of a tender is its rigid wheel base.

Rim (of a Car Wheel). That portion of a car wheel outside of the plate. The face of the rim is the outside vertical edge or face.

(Of a Steel Tired Wheel). 2, Figs. 897-907. The wrought ring which is welded or cast in the outer ends of the spokes and is surrounded by the tire.

Rivet. Fig. 201. There are many different designs, named after their respective characteristics, as cone head rivet, steeple head rivet, button head rivet, etc.

Rivets, Shearing Strength of. See Boiler Inspection.

Riveted Joints. Figs. 202-217. See Butt Joint, Chain Riveting, Circumferential Riveting, Diamond Boiler Seam, Lap Joint, Longitudinal Seam, Staggered Riveting.

Rocker (Valve Gear). 37, Figs. 101-140; 20 and 21, Figs. 648-761; 39, Figs. 697-701; Figs. 760, 771. A short shaft having two arms, one of which is pivoted to the valve rod and the other to the link block or to the transmission bar pin. Frequently called a rock shaft or rocker shaft.

Rocker Box (or **Rocker Bearing**). Fig. 863; 239, Figs. 101-140; 22, Figs. 648-761; Figs. 711, 712. A casting with bearings in which the rocker shaft rests. It is bolted to the frame on each side of the engine. British, rocker shaft carrier.

Rocker Box Cap. A cast iron cover secured to the box by bolts. It is provided with an oil cup, and when removed gives access to the rocker shaft.

Rocker Bushing. A cylindrical sleeve fitted inside the rocker box as a bearing for the shaft. Usually made of phosphor bronze or other anti-friction metal.

Rocker Pin (Bottom). 38, Figs. 101-140. A hardened steel pin passing through the lower rocker arm and fastened to it. This pin carries the link block, or the forward end of the transmission bar. In locomotives having the transmission bar carried over the forward driving axle, the rocker is sometimes hung with both arms

downward, in which case the inner arm would carry the transmission bar pin, while the outer one would connect with the valve rod.

(Top.) A similar pin secured to the upper rocker arm and to the valve rod.

Rocker Trunnion Collar. An enlargement or fillet on the rocker shaft.

Rocking Grate. A grate having grate bars carried in bearings on the side frame so that they can be revolved out of a horizontal position to drop the ashes by means of a system of crank arms and levers operated from the cab deck. See Grate and Shaking Grate.

Rod. A bar of iron or steel with a nut on each end, in distinction from a bolt which has a head on one end and a nut on the other. Very long bolts are often called rods. Rods in general take their name from the parts with which they are connected or the use which they serve.

On a locomotive the steel connecting bars between the cross head and the several driving wheels. See Main Rod, Side Rod, Eccentric Rod, Valve Rod, Brake Rod.

Rod Bearing. The bearing secured in the end of a main or side rod where it is in contact with the journal of the crank pin or wrist pin. Called also rod brass.

Rod Oil Cup. Figs. 1329-1331. A receptacle holding a supply of oil for a crank pin. Sometimes screwed into the stub or strap, and frequently forged on the stub end.

Rolled Axle. An axle made of rolled iron. See Axle.

Roller. "That which rolls; that which turns on its own axis, particularly a cylinder of wood, stone, metal, etc."—Webster.

Roller Side Bearings, Body and Truck. Figs. 1949-1956. See Anti-Friction Side Bearings.

Roof (Cabs). 162, Figs. 101-140. The cover or upper part of a cab with a surface sloping to the sides to shed water. See Arch Roof.

(Firebox.) See Crown Sheet.

Roof Sheet. 41, Figs. 152-186. The boiler plate or sheet directly over the firebox crown sheet and to which the crown sheet stays are attached. In some designs the roof sheet and outside firebox sheets are made in one continuous plate. In wagon top boilers the roof sheet and dome course are usually identical.

Round Iron. See Limit Gages for Round Iron.

Running Board. 45, Figs. 101-140; Figs. 1105, 1106. A narrow platform, made of wood or steel, placed on each side of the boiler to enable the engineman or fireman to go from the cab to the front end of the locomotive. See Safety Appliance Standards.

Running Board Angle. An angle secured to a steel running board to stiffen it.

Running Board Bracket. 172, Figs. 101-140; Figs. 1107, 1108. A cast, malleable or wrought iron bracket fastened to the boiler and to the running board to support it.

Running Board Edge. A strip of iron or brass on the outer edge of a running board.

Running Board Floor Plate. Figs. 1102-1103. Corrugated sheet iron or steel used on the upper surface of running boards to prevent slipping.

Running Board Tee. A T-shaped support for a running board.

Running Gear. A general term applied to and including the wheels, axles, springs, axle boxes, frames and other carrying parts of a truck or locomotive.

Russia Iron. A form of sheet iron manufactured in Russia, the exact process for making which has heretofore been kept secret, but which consists essentially in forming a chemical compound of iron upon its surface at the same time that it is highly polished, so that it is not likely to rust. Modern substitutes for this iron are also known as Planished Iron. Used for boiler and cylinder jackets.

S

Saddle. 10, Figs. 101-140; 13, Figs. 634-640; 45, Figs. 317-319; Fig. 580. That part of a cylinder casting on which the smokebox rests and containing the steam and exhaust passage is called a half saddle. In very large engines the saddle is sometimes cast separately and bolted to the cylinders through flanges on each. With the introduction of outside steam pipes the steam passages have been shortened and the casting made simpler and stronger. See Driving Box Saddle, Link Saddle.

Saddle Bolt. The bolt that is used for bolting the two halves of the cylinder saddle together. Usually the cylinder is cast with a half saddle and the saddle bolt is for fastening these two halves together.

Saddle Tank. 256, Figs. 101-140. A water tank which rests on and is supported by the top of the boiler.

Saddle Tank Locomotive. Figs. 3-9, 11-12, 30, 121. A locomotive having a water tank over the top of the boiler and operated without the usual tender. Used for contractor's, industrial and suburban service.

Safe End. See Tubes (Specifications and Tests).

Safety Appliance Standards. The following specifications as to the number, dimensions, location and manner of application of safety appliances on locomotives and tenders are required by law and are taken from the United States Safety Appliance Standards as issued by the Interstate Commerce Commission, March 13, 1911. These have been adopted as standard by the American Railway Master Mechanics' Association.

Steam Locomotives Used in Road Service Tender Sill-Steps.

Number.	Four (4) on tender.
Dimensions.	Bottom tread not less than eight (8) by twelve (12) inches, metal. [*May have wooden treads.*] If stirrup-steps are used, clear length of tread shall be not less than ten (10) preferably twelve (12) inches.
Location.	One (1) near each corner of tender on sides.
Manner of application.	Tender sill-steps shall be securely fastened with bolts or rivets.

Pilot Sill-Steps.

Number.	Two (2).
Dimensions.	Tread not less than eight (8) inches in width by ten (10) inches in length, metal. [*May have wooden treads.*]
Location.	One (1) on or near each end of buffer-beam outside of rail and not more than sixteen (16) inches above rail.
Manner of application.	Pilot sill-steps shall be securely fastened with bolts or rivets.

PILOT-BEAM HANDHOLDS.

Number. Two (2).

Dimensions. Minimum diameter, five-eighths (⅝) of an inch wrought iron or steel.

Minimum clear length, fourteen (14) preferably sixteen (16) inches.

Minimum clearance, two and one-half (2½) inches.

Location. One (1) on each end of buffer-beam.

[*If uncoupling-lever extends across front end of locomotive to within eight* (8) *inches of end of buffer-beam, and is seven-eighths* (⅞) *of an inch or more in diameter, securely fastened, with a clearance of two and one-half* (2½) *inches, it is a handhold.*]

Manner of application. Pilot-beam handholds shall be securely fastened with bolts or rivets.

SIDE-HANDHOLDS.

Number. Six (6).

Dimensions. Minimum diameter, if horizontal, five-eighths (⅝) of an inch; if vertical, seven-eighths (⅞) of an inch, wrought iron or steel.

Horizontal, minimum clear length, sixteen (16) inches.

Vertical, clear length equal to approximate height of tank.

Minimum clearance, two (2), preferably two and one-half (2½), inches.

Location. Horizontal or vertical: If vertical, one (1) on each side of tender within six (6) inches of rear or on corner, if horizontal, same as specified for "Box and other house cars."

One (1) on each side of tender near gangway; one (1) on each side of locomotive at gangway; applied vertically.

Manner of application. Side-handholds shall be securely fastened with not less than one-half (½) inch bolts or rivets.

REAR-END HANDHOLDS.

Number. Two (2).

Dimensions. Minimum diameter, five-eighths (⅝) of an inch, wrought iron or steel.

Minimum clear length, fourteen (14) inches.

Minimum clearance, two (2) preferably two and one-half (2½), inches.

Location. Horizontal: One (1) near each side of rear end of tender on face of end-sill. Clearance of outer end of handhold shall be not more than sixteen (16) inches from side of tender.

Manner of application. Rear-end handholds shall be securely fastened with not less than one-half (½) inch bolts or rivets.

UNCOUPLING LEVERS.

Number. Two (2) double levers, operative from either side.

Dimensions. Rear-end levers shall extend across end of tender with handles not more than twelve (12), preferably nine (9), inches from side of tender with a guard bent on handle to give not less than two (2) inches clearance around handle.

Location. One (1) on rear end of tender and one (1) on front end of locomotive.

Handles of front-end levers shall be not more than twelve (12), preferably nine (9), inches from ends of buffer-beam, and shall be so constructed as to give a minimum clearance of two (2) inches around handle.

Manner of application. Uncoupling-levers shall be securely fastened with bolts or rivets.

COUPLERS.

Locomotives shall be equipped with automatic couplers at rear of tender and front of locomotive.

STEAM LOCOMOTIVES USED IN SWITCHING SERVICE

FOOTBOARDS.

Number. Two (2) or more.

Dimensions. Minimum width of tread, ten (10) inches, wood.

Minimum thickness of tread, one and one-half (1½), preferably two (2), inches.

Minimum height of back-stop, four (4) inches above tread.

Height from top of rail to top of tread, not more than twelve (12) nor less than nine (9) inches.

Location. Ends or sides.

If on ends, they shall extend not less than eighteen (18) inches outside of gage of straight track, and shall be not more than (12) inches shorter than buffer-beam at each end.

Manner of application. End footboards may be constructed in two (2) sections, *provided* that practically all space on each side of coupler is filled; each section shall be not less than three (3) feet in length.

Footboards shall be securely bolted to two (2) one (1) by four (4) inches metal brackets, *provided* footboard is not cut or notched at any point.

If footboard is cut or notched or in two (2) sections, not less than four (4) one (1) by three (3) inches metal brackets shall be used, two (2) located on each side of coupler. Each bracket shall be securely bolted to buffer-beam, end-sill or tank-frame by not less than two (2) seven-eighths (⅞) inch bolts.

If side footboards are used, a substantial handhold or rail shall be applied not less than thirty (30) inches nor more than sixty (60) inches above tread of footboard.

SILL-STEPS.

Number. Two (2) or more.

Dimensions. Lower tread of step shall be not less than eight (8) by twelve (12) inches, metal. [*May have wooden treads.*]

If stirrup-steps are used, clear length of tread shall be not less than ten (10), preferably twelve (12), inches.

Location. One (1) or more on each side at gangway secured to locomotive or tender.

Manner of application. Sill-steps shall be securely fastened with bolts or rivets.

END-HANDHOLDS.

Number. Two (2).

Dimensions. Minimum diameter, one (1) inch, wrought iron or steel.

Minimum clearance, four (4) inches, *except* at coupler casting or braces, when minimum clearance shall be two (2) inches.

Location. One (1) on pilot buffer-beam; one on rear end of tender, extending across front end of locomotive and rear end of tender. Ends of handholds shall be not more than six (6) inches from ends of buffer-beam or end-sill, securely fastened at ends.

Manner of application. End handholds shall be securely fastened with bolts or rivets.

SIDE-HANDHOLDS.

Number. Four (4).

Dimensions. Minimum diameter, seven-eighths (⅞) of an inch, wrought iron or steel.

Clear length equal to approximate height of tank.

Minimum clearance, two (2), preferably two and one-half (2½), inches.

Location. Vertical. One (1) on each side of tender near front corner; one (1) on each side of locomotive at gangway.

Manner of application. Side-handholds shall be securely fastened with bolts or rivets.

UNCOUPLING-LEVERS.

Number. Two (2) double levers, operative from either side.

Dimensions. Handles of front-end levers shall be not more than twelve (12), preferably nine (9), inches from ends of buffer-beam, and shall be so constructed as to give a minimum clearance of two (2) inches around handle.

Rear-end levers shall extend across end of tender with handles not more than twelve (12), preferably nine (9), inches from side of tender, with a guard bent on handle to give not less than two (2) inches clearance around handle.

Location. One (1) on rear end of tender and one (1) on front of locomotive.

HANDRAILS AND STEPS FOR HEADLIGHTS.

Switching locomotives with sloping tenders with manhole or headlight located on sloping portion of tender shall be equipped with secure steps and handrail or with platform and handrail leading to such manhole or headlight.

END-LADDER CLEARANCE.

No part of locomotive or tender *except* draft-rigging, coupler and attachments, safety-chains, buffer-block, foot-board, brake-pipe, signal-pipe, steam-heat pipe or arms of uncoupling-lever shall extend to within fourteen (14) inches of a vertical plane passing through the inside face of knuckle when closed with horn of coupler against buffer-block or end-sill.

COUPLERS.

Locomotive shall be equipped with automatic couplers at rear of tender and front of locomotive.

SPECIFICATIONS COMMON TO ALL STEAM LOCOMOTIVES.

HAND-BRAKES.

Hand-brakes will not be required on locomotives nor on tenders when attached to locomotives.

If tenders are detached from locomotives and used in special service, they shall be equipped with efficient hand-brakes.

RUNNING-BOARDS.

Number. Two (2).

Dimensions. Not less than ten (10) inches wide. If of wood, not less than one and one-half (1½) inches in thickness; if of metal, not less than three-sixteenths (3/16) of an inch, properly supported.

Location. One (1) on each side of boiler extending from cab to front end near pilot-beam. [*Running-boards may be in sections. Flat-top steam-chests may form section of running-board.*]

Manner of application. Running boards shall be securely fastened with bolts, rivets or studs.

Locomotives having Wootten type boilers with cab located on top of boiler more than twelve (12) inches forward from boiler-head shall have suitable running-boards running from cab to rear of locomotive, with handrailings not less than twenty (20) nor more than forty-eight (48) inches above outside edge of running boards, securely fastened with bolts, rivets or studs.

HANDRAILS.

Number. Two (2) or more.

Dimensions. Not less than one (1) inch in diameter, wrought iron or steel.

Location. One on each side of boiler extending from near cab to near front end of boiler, and extending across front end of boiler, not less than twenty-four (24) nor more than sixty-six (66) inches above running-board.

Manner of application. Handrails shall be securely fastened to boiler.

TENDER OF VANDERBILT TYPE.

Tenders known as the Vanderbilt type shall be equipped with running-boards; one (1) on each side of tender not less than ten (10) inches in width and one on top of tender not less than forty-eight (48) inches in width, extending from coal space to rear of tender.

There shall be a handrail on each side of top running-board, extending from coal space to rear of tank, not less than one (1) inch in diameter and not less than twenty (20) inches in height above running-board from coal space to manhole.

There shall be a handrail extending from

coal space to within twelve (12) inches of rear of tank, attached to each side of tank above side running-board, not less than thirty (30) nor more than sixty-six (66) inches above running-board.

There shall be one (1) vertical end handhold on each side of Vanderbilt type of tender, located within eight (8) inches of rear of tank extending from within eight (8) inches of top of end-sill to within eight (8) inches of side handrail. Post supporting rear end of side running-board if not more than two (2) inches in diameter and properly located, may form section of handhold.

An additional horizontal end handhold shall be applied on rear end of all Vanderbilt type of tenders which are not equipped with vestibules. Handhold to be located not less than thirty (30) nor more than sixty-six (66) inches above top of end-sill. Clear length of handhold to be not less than forty-eight (48) inches.

Ladders shall be applied at forward ends of side running-boards.

HANDRAILS AND STEPS FOR HEADLIGHTS.

Locomotives having headlights which can not be safely and conveniently reached from pilot-beam or steam-chests shall be equipped with secure handrails and steps suitable for the use of men in getting to and from such headlights.

A suitable metal end or side-ladder shall be applied to all tanks more than forty-eight (48) inches in height, measured from the top of end-sill, and securely fastened with bolts or rivets.

COUPLERS.

Locomotives shall be equipped with automatic couplers at rear of tender and front of locomtive.

Safety Beam (Trucks). 17, Figs. 997-1000; 13, Figs. 1032-1033. A longitudinal member connecting the end piece and transom above the axles and inside of each wheel piece. Iron straps (axle safety bearings) are attached to the beam and pass under the axles so as to hold them in position in case of a breakage of axles or wheels on either side.

Safety Chain. Fig. 1784. A chain fastened to each of the forward corners of a locomotive truck and to the bumper beam to prevent the truck from turning in case of derailment. Safety chains are also fastened to the four corners of both tender trucks to hold them to the tender frame, and in addition two are commonly used between the engine and tender as a safeguard in case a drawbar or drawhead breaks. Called also check chains. See also BRAKE SAFETY CHAIN.

18, Fig. 261. A chain fastened to some convenient point on the locomotive and connected to the oil tank valve for the purpose of closing it and shutting off the supply of oil in case the engine and tender break away from each other.

Safety Chain Clevis. A holder or stirrup fastened to a locomotive or tender truck for the attachment of a safety chain.

Safety Chain Eye. 17, Figs. 1762-1766. An iron eye with a broad base bolted to the under side of the side sills of a tender or to the truck frame to receive the hook on the end of a truck safety chain.

Safety Chain Eye Bolt. Fig. 1784. An eye bolt secured to an engine bumper, a tender sill or a truck frame to hold the end of a safety chain.

Safety Chain Hook. Fig. 1784. A hook on the end of a safety chain or check chain to attach it to an eye on the truck or on the frame of an engine or tender.

Safety Chain Lug. A projection or eye for the attachment of a safety chain.

Safety Chain Pin. A pin put through the jaw of the safety chain clevis to secure the clevis to an eye bolt or lug.

Safety Coupling Chain (Tenders and Electric Locomotives.) A chain attached to the bumper or end piece of a tender or locomotive and hooked to an eye in the platform of an adjoining car, or the bumper of a tender or locomotive, so as to prevent the train from being separated in case the couplers should become detached or broken. They are necessarily used in pairs, an eye or a chain with a hook being attached to the opposite sides of the same bumper.

Safety Strap. 9a, Figs. 976-987. A bent piece of iron on a two-wheel front truck to support the end of the equalizer in case of breakage of a center pin. See also AXLE SAFETY STRAP, BRAKE SAFETY STRAP, ECCENTRIC ROD SAFETY STRAP, GUIDE SAFETY STRAP.

Safety Valve. 153, Figs. 101-140; Figs. 349-360. A valve connected to the steam space of a boiler, arranged to open at a predetermined pressure, for which it has been set, in order to relieve the boiler pressure and prevent an explosion. It consists of a base with a circular opening having a conical seat on which the valve disc fits accurately and is held in place by a spring. The disc is made with a lip or groove which increases the area of the valve above its seat and in combination with an adjusting ring, or the valve case, forms the huddling chamber. When the boiler pressure, acting against the area of the valve, lifts it from the seat part or all of the steam passes through this chamber. A slight pressure, the amount of which can be adjusted, is created and acts against the extra area of the valve over the chamber for the purpose of holding it open until the boiler pressure is blown down to a point where the combined pressure on the effective area of the valve and in the huddling chamber is less than the pressure imposed upon the upper surface of the valve disc by the spring, thus allowing the valve to close on its seat promptly and without chattering. By regulating the pressure in the huddling chamber the valve can be made to close within a pound or two of the pressure at which it opened. A case is attached to the valve base enclosing the spring. In the muffled type of safety valve the escaping steam is made to take a tortuous passage through perforated baffle plates before reaching the atmosphere and thus deadening the noise. From two to three safety valves are used on modern locomotives. See BOILER INSPECTION.

Safety Valve (Air Brake). Fig. 1450. A valve attached to the distributing valve which limits locomotive brake cylinder pressure in service application to 68 lbs.

Safety Valves. (A. R. M .M. A. Standard.) Specifications for determining the size of safety valves, their appli-

cation to locomotives and their repairs, were adopted as standard by the American Railway Master Mechanics' Association in 1912. They are as follows:

1. FORMULA FOR DETERMINING THE SIZE OF VALVE REQUIRED, ASSUMING VALVES HAVE 45-DEGREE SEAT.

D—The total of the actual diameters of the inner edge of the seats of valves required.
H—Total heating surface of boiler in square feet. (Superheating surface not to be included.)
L—Vertical lift of valve in inches.
P—Absolute boiler pressure in pounds per square inch.

$$D = .036 \times \frac{H}{L \times P}$$

EXAMPLE

$$\frac{.036 \times 2878}{.1 \times 200} = 5.2'' \text{ Diameter}$$

which would require two 3-in. valves.

METHOD OF DETERMINING MAXIMUM CAPACITY OF SAFETY VALVES

2. The only accurate method of determining the capacity of safety valves is by actual test in a testing plant, with safety valves fully equipped with springs, as in actual road service. In order that it should be positively known that safety valves will prevent undue rise in pressure under extreme conditions, they should be subjected to a road test.

NUMBER AND SIZE TO BE APPLIED

3. Every locomotive should be equipped with not less than two and not more than three safety valves, the size to be determined as per formula in paragraph 1. Safety valves to be set as follows:

First—Boiler pressure.
Second—Two pounds in excess.
Third—Three pounds above second, or five pounds in excess of first.

METAL RECOMMENDED FOR VALVES AND VALVE SEATS

4. Bronze alloys should be used in the manufacture of valves and valve seats.

STAMPING LIFT ON VALVES

5. Manufacturers should be required to stamp on the valve lift in inches and the discharge capacity in pounds per minute, as determined by actual test, with valve in working condition, and set for a blow-back of not to exceed 3 pounds.

ESTIMATING STEAM DISCHARGE

6. Steam discharge from safety valves of given size can be estimated closely by the use of Napier's rule for flow of steam, as follows:

Flow of steam per second:
Absolute pressure in pounds per square inch, multiplied by area in square inches of discharge opening, divided by 70.
Multiplied by 3,600 gives flow in pounds per hour.

LOCATION OF VALVES ON BOILER

7. Safety valves should be located at the highest point on the boiler, where clearance limits will permit, in vertical position, avoiding the use of piping, long nipples and ells between safety valves and boiler.

SPACING IN DOME

8. Where safety valves are located on an independent dome they should be spaced as per Plate No. 1. The opening from boiler into dome and the area between supporting ribs in dome should not be less than inlet area of valves.

PLATE-I.

VALVE SIZE	SPACING S	RADIUS R
$4\frac{1}{2}$"	9"	$5\frac{9}{16}$"
4 "	$8\frac{1}{2}$"	$4\frac{7}{8}$"
$3\frac{1}{2}$"	8 "	$4\frac{5}{8}$
3"	$7\frac{1}{4}$"	$4\frac{3}{16}$
$2\frac{1}{2}$"	$6\frac{1}{2}$"	$3\frac{3}{4}$"

APPLICATIONS MADE AS DESCRIBED PERMIT USE OF WRENCH FITS RECOMENDED & MOVEMENT OF STANDARD WRENCH ONE SIXTH OF A TURN WITH A REASONABLE MARGIN

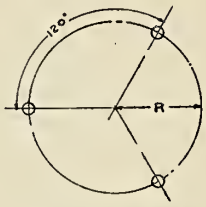

THREE VALVES

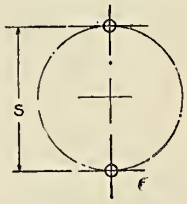

TWO VALVES.

SPACING OF SAFETY VALVES ON INDEPENDENT DOME.

HYDROSTATIC AND OTHER TESTS

9. The screwing down of the safety valve spring during a hydrostatic test of boiler should not be practiced. Valves with springs designed for certain pressures should not be subjected to extreme pressures. One safety valve should be removed and replaced with a special high-pressure valve, and the other valves should be removed and replaced with caps or plugs during test.

STANDARD CONNECTIONS

10. In order to make valves of different manufacture interchangeable, standard thread and diameter of valves at connection should be used, as follows:

2½-in. safety valve	2½-in U. S. S. pipe thread	8 threads to in.
3 -in. safety valve	3 -in. U. S. S. pipe thread	8 threads to in.
3½-in. safety valve	3½-in U. S. S. pipe thread	8 threads to in.
4 -in. safety valve	4 -in. U. S. S. pipe thread	8 threads to in.
4½-in. safety valve	4½-in. U. S. S. pipe thread	8 threads to in.

Valves of above sizes to be made for U. S. S. wrench fit.

INSPECTION OF OLD SPRINGS

11. Old springs should be tested as to their deflection under load before being used in repaired valves.

REPAIRS TO SAFETY VALVES

12. Safety valves should be thoroughly overhauled and put in good condition whenever the locomotive is in shop for general repairs. Standard gages should be used in order that important dimensions may be maintained as originally designed.

Safety Valve Dome. See SAFETY VALVE TURRET.

Safety Valve Extension. A nipple or short piece of pipe screwed in the dome cap and to the lower part of a safety valve. Also called safety valve bushing.

Safety Valve Extension Flange. A flanged fitting bolted to the body of a safety valve and having the safety valve extension screwed in it.

Safety Valve Muffler. A perforated plate attached to or forming part of the case of a safety valve through which the escaping steam is made to take a tortuous passage for the purpose of deadening the noise.

Safety Valve Turret. 102, Figs. 101-140; 70, Figs. 152-186. A stand or outlet screwed on the top of a boiler for holding the safety valves. Sometimes made of a solid pressed steel plate in the form of a dome and riveted to the boiler shell.

Safety Valve Turret Ring. A ring riveted around an opening in the boiler for the attachment of a safety valve turret.

Safety Valve Turret Swash Plate. 71, Figs. 152-186. A small sheet placed across the inside of the boiler shell a short distance below the safety valve turret opening to prevent water being drawn through the safety valves and thus chocking them.

Sand Box. 46, Figs. 101-140; Figs. 1633, 1644. A receptacle, usually cylindrical, with a dome-shaped top, placed on the boiler for carrying sand to prevent slipping of the driving wheels. It is operated by a rod from the cab to a valve, or by a pneumatic sander which allows sand to run through the sand pipes to the rail in front of the drivers. The sand box is also sometimes located beneath the running board.

Sand Box Arm. A lever or rod connection to open or close the sand box valve.

Sand Box Base. An iron or steel casting secured to the shell of the boiler, and bolted to the body of the sand box.

Sand Box Bracket. A casting or projection secured to the top of a boiler to hold a sand box.

Sand Box Casing. Fig. 251. The outside sheathing or cover of a sand box. Usually made of Russia iron to present a finished appearance to the sandbox.

Sand Box Connection Pins. Short studs used to secure the links to the operating shaft and valve of a sandbox.

Sand Box Cover. 47, Figs. 101-140. A dome-shaped casting or pressed steel shape having a hole in the top, and forming the upper part of a sand box.

Sand Box Lug. A projection forming part of a sand box base by which it is bolted to the sand box bracket.

Sand Box Pipe. An outlet pipe on each side of a sand box to connect with the sand pipes that lead down to the rail.

Sand Box Rod. Fig. 1637. A rod secured to the arm or lever of a sand box valve, and extending from the sand box to the cab. Also called sander reach rod.

Sand Box Rod Handle. That part of a sand box rod which is grasped by the engineman to operate the sand box valve. Also called sander reach rod handle.

Sand Box Shaft. A short shaft with links attached for operating the sand box valve. It has an arm fastened to one end for attaching the operating rod to the cab.

Sand Box Step. 48, Figs. 101-140. A standing place secured to the side of a locomotive boiler to enable a man to reach the sand box.

Sand Box Step Block. A bracket on the boiler to which the sand box step is fastened.

Sand Box Top. 47, Figs. 101-140. The lid or cap closing the opening in the cover of a sand box.

Sand Box Valve. A valve in the base of a sand box to allow sand to run out through the sand pipes to the rail.

Sand Pipe. 189, Figs. 101-140. The tubes leading down from the sand box outlets to the rails in front of the driving wheels.

Sand Plank. A common name for a Spring Plank.

Sander. 188, Figs. 101-140; Figs. 1633, 1650. A device attached to a sand box, operated by compressed air and controlled by a vale in the cab, for delivering sand in front of the driving wheels through the sand pipes. See Locomotives, Inspection and Testing.

Santa Fe Type Locomotive (2-10-2). Figs. 1, 46-48, 117. A locomotive having a two-wheel front truck, five pairs of coupled driving wheels and a two-wheel trailing truck. Used for heavy freight service.

Sash. The frame of a window or blind, in which the glass or slats are set, but commonly used, especially in compound words, as a substitute for window, meaning the window and sash complete.

Sash Bracket. A casting of iron or brass that is attached to a window or door sash to which is fastened some means of holding the sash in any desired position. As in the case of the front cab doors or the windows of the same.

Scotch Yoke. See Valve Rod Block Yoke.

Scotch Yoke Block. See Valve Rod Block.

Screw. A cylinder surrounded by a spiral ridge or groove, every part of which forms an equal angle with the axis of the cylinder, so that if developed on a plane surface it would be an inclined plane. See Screw Thread.

Screw Coupling (British). The means by which the engines and vehicles of a train are coupled together. On the Continent it is used for both passenger and freight trains. It comprises a right and left-handed screw provided with a hinged weighted handle, which always hangs downward, so that it has no tendency to unscrew and slacken the coupling, and two nuts with gudgeons taking in the eyes of U-shaped coupling links or shackles. The screw coupling may be either loose, or one shackle may be attached to the drawbar.

Screw Gages. Instruments for measuring the diameter or size of screws. They are of two kinds, external, for measuring male screws, and internal, for measuring female screws.

Screw Jacks. Figs. 2320, 2326. A jack, the power of which depends upon a screw, turned by a lever. There are several such jacks in use, the bell base, ratchet screw jack, the differential screw jack which has two screws, one working within the other, and jacks with a capstan head, into which a bar may be inserted.

Screw Pitch Gage. "A gage for determining the number of threads to the inch on screws and taps. It consists of a number of toothed plates turning on a common pivot, so that the serrated edge of each may be applied to the screw until one is found which corresponds therewith. The figures stamped on the plate indicate the number of threads to the inch."—Knight. In the ordinary single thread screw the pitch is indicated by the number of threads to an inch.

Screw Reverse Gear. Figs. 779, 785-787, 799. A device connected to the reach rode and consisting of a worm screw fitted with a handle, and resting in a support securely attached to the boiler. The reach rod end is fitted with a nut which screws on to the worm screw. By revolving the worm screw the engine can be reversed.

Screw Thread. The groove, or the material between the grooves, which is cut on the outside surface of a cylinder to form a male screw, or on the inside surface to form a female screw. Pipe Screw Threads, which see, are usually V-shaped, but all other threads in common use for ordinary purposes are Whitworth or Sellers standard screw threads the former being the

European and the latter the American standard. The American Railway Master Mechanics' Association in 1870 adopted the report of a committee recommending

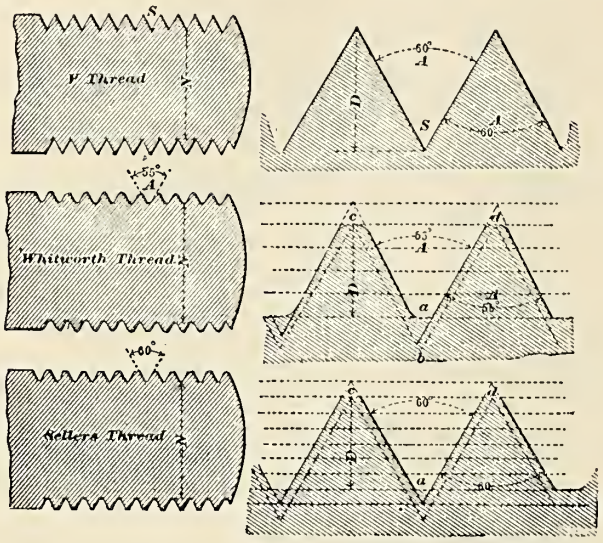

the United States Standard screw thread. The forms and dimensions of the threads are shown above. It is also known as the Sellers and Franklin Institute Standard. This system of screw threads, bolt heads and nuts is the standard of the Association, and repeated action of the Association has deprecated the use of any other system, and encouraged the careful maintenance of these standards.

Mr. Sellers, who proposed this system of screw threads, described it in an essay before the Franklin Institute of Philadelphia, April 21, 1864, as follows:

"The proportions for the proposed thread and its comparative relation to the sharp and rounded threads will be readily understood from the diagrams. The angle of the proposed thread is fixed at 60 degrees the same as the sharp thread, it being more readily obtained than 55 degrees, and more in accordance with the general practice in this country. Divide the pitch, or, which is the same thing, the side of the thread into eight equal parts, take off one part from the top and fill in one part in the bottom of the thread, then the flat top and bottom will equal one-eighth of the pitch; the wearing surface will be three-quarters of the pitch, and the diameter or screw at bottom of the thread will be expressed by the formula:

$$\text{Diameter,} \quad \frac{1.299}{\text{Number of threads per inch}}$$

The Sellers or Franklin Institute System is also

PROPORTIONS FOR UNITED STATES STANDARD SCREW-HEADS, NUTS AND BOLTS.

SCREW-THREADS				HEXAGON NUTS				HEXAGON BOLT HEADS			
Diameter of screw.	Threads per inch.	Diameter at root of thread.	Width of flat.	Short diameter rough.	Short diameter finish.	Thickness rough.	Thickness finish.	Short diameter rough.	Short diameter finish.	Thickness rough.	Thickness finish.
1/4	20	.185	.0062	1/2	7/16	1/4	3/16	3/8	5/16	3/16	1/8
5/16	18	.240	.0074	19/32	17/32	5/16	1/4	15/32	13/32	11/64	11/64
3/8	16	.294	.0078	11/16	5/8	3/8	5/16	9/16	1/2	7/32	7/32
7/16	14	.344	.0089	25/32	23/32	7/16	3/8	21/32	19/32	21/64	17/64
1/2	13	.400	.0096	7/8	13/16	1/2	7/16	3/4	11/16	3/8	9/16
9/16	12	.454	.0104	31/32	29/32	9/16	1/2	27/32	25/32	27/64	23/64
5/8	11	.507	.0113	1 1/16	1	5/8	9/16	15/16	7/8	15/32	9/32
3/4	10	.620	.0125	1 1/4	1 3/16	3/4	11/16	1 1/8	1 1/16	9/16	1/2
7/8	9	.731	.0138	1 7/16	1 3/8	7/8	13/16	1 5/16	1 1/4	21/32	19/32
1	8	.837	.0156	1 5/8	1 9/16	1	15/16	1 1/2	1 7/16	3/4	11/16
1 1/8	7	.940	.0178	1 13/16	1 3/4	1 1/8	1 1/16	1 11/16	1 5/8	27/32	25/32
1 1/4	7	1.065	.0178	2	1 15/16	1 1/4	1 3/16	1 7/8	1 13/16	15/16	7/8
1 3/8	6	1.160	.0208	2 3/16	2 1/8	1 3/8	1 5/16	2 1/16	2	1 1/32	31/32
1 1/2	6	1.284	.0208	2 3/8	2 5/16	1 1/2	1 7/16	2 1/4	2 3/16	1 1/8	1 1/16
1 5/8	5 1/2	1.389	.0227	2 9/16	2 1/2	1 5/8	1 9/16	2 7/16	2 3/8	1 7/32	1 9/32
1 3/4	5	1.491	.0250	2 3/4	2 13/16	1 3/4	1 11/16	2 5/8	2 9/16	1 5/16	1 1/4
1 7/8	5	1.616	.0250	2 15/16	2 7/8	1 7/8	1 13/16	2 13/16	2 3/4	1 13/32	1 11/32
2	4 1/2	1.712	.0277	3 1/8	3 1/16	2	1 15/16	3	2 13/16	1 1/2	1 7/16

PROPORTIONS FOR SELLERS' STANDARD NUTS AND BOLTS

Rough Nut = one and one-half diameter of bolt + 1/8.

Finished Nut = one and one-half diameter of bolt + 1/16.

Rough Nut = diameter of bolt.

Finished Nut = diameter of bolt — 1/16.

Rough Head = one and one-half diameter of bolt.

Finished Head = one and one-half diameter of bolt — 1/16.

Rough Head = three-quarter times diameter of bolt.

Finished Head = three-quarte times diameter of bolt — 1/16.

NOTE.—In 1899 the following dimensions for square bolt heads were adopted as standard: The side of the head shall be one and one-half times the diameter of the bolt, and the thickness of the head shall be one-half the side of the head.

called the United States Standard System. In 1892 the Association adopted as standard the United States Standard sizes of nuts and bolt heads.

In 1903 the arrangement of these standards was made to conform to the arrangement as adopted by the Master Car Builders' Association. In 1913 the proportions of the bolt heads and nuts were revised as shown in the drawings.

Screw Thread Gage. A steel plate with notches in the edge of the precise form of screw threads, used for giving the proper form to the edges of screw cutting tools.

Seam Lap. That portion of one edge of a boiler plate that is laid over the other edge of the same plate or an adjoining plate to rivet them together.

Seams. See Rivetted Joints.

Segmental Arc Draft Pan. Figs. 266-267. A fire or draft pan for an oil burning locomotive, the bottom of which is built to form the segment of an arc.

Separable Boiler. Fig. 162. A boiler composed of two units joined together in a separable joint. The rear unit forms the boiler proper with firebox and tubes, while the forward unit contains a superheater, reheater, feedwater heater and smokebox. Used on Mallet locomotives.

Series. A mode of connecting two or more electric motors to the supply circuit. The motors are arranged or connected in series when the current passes first through one and then through the other.

Service Recorder. Figs. 1240, 1241. A device located in the cab for recording the time a locomotive actually runs. Its most common application is to switch engines.

Set (of Elliptic Springs). The amount of compression of which the spring is capable. The distance between the spring bands when unloaded. The arch is half the set, plus the thickness of the spring band.

Shaking Grate. Figs. 436-437, 443-444, 456-459. A grate with broad, flat or finger grate bars carried on eccentric bearings or links and arranged to move up and down relatively to each other to shake the ashes from the fire through to the ash pan below.

Shay Geared Locomotive. Figs. 95-96, 143. A locomotive for climbing steep grades which utilizes the entire weight of engine and tender for adhesion. A three-cylinder vertical engine is mounted on one side just in front of the firebox. It drives a horizontal shaft made in sections and joined with flexible couplings, which extends the entire length of the engine and tender and drives all the axles by means of bevel gears on the shaft and wheels. The wheels are grouped in four-wheel swiveling trucks to enable the locomotive to round sharp curves.

Sheet Metal Gage. A gage, usually a micrometer, for measuring the thickness of thin sheets or plates of metal.

The American Railway Master Mechanics' Association in 1882 adopted the Brown & Sharpe micrometer gage as standard for the measurement of sheet metal. Reaffirmed, 1891.

Shell. See Barrel and Boiler Shell.

Shelled Out (Car Wheels). A term applied to wheels which become rough from circular pieces shelling out of the tread, leaving a rounded flat spot, deepest at the edge, with a raised center.

Shield. See Fire Door Shield, Magneto Shield, Commutator Shield.

Shim. A thin piece of wood or metal used as a distance block to save more careful fitting.

Shoe. A plate, block or piece of any material on or against which an object moves, usually to prevent the latter from being worn. See Brake Shoe, Driving Box Shoe, Third-Rail Shoe.

Shrinkage. See Tire Shrinkage.

Shunting (British). The act of moving cars from one track to another, as in making up or separating trains. In this country usually called switching. Sometimes the word drilling or regulating is used.

Side Bearing. 22, Fig. 1019; Fig. 1923; Figs. 1947-1956. Supports attached to the bolsters near their ends to prevent too much rolling or rocking of the tender on the center plate. Anti-friction side bearings allow the truck to turn freely on curves. See Body Side Bearing, Truck Side Bearing, Anti-Friction Side Bearing.

Side Frame. See Truck Side Frame.

Side Hand Holds. See Safety Appliance Standards.

Side Rod. 5, Figs. 697-701; Figs. 871, 873, 876, 884, 885. A rolled, hammered or cast steel rod connecting the crank pins of any two adjoining driving wheels on the same side of a locomotive to distribute the power transmitted through the main rod to any number of driving wheels. Called also coupling rod and parallel rod. See Rule 28, Locomotives, Inspection and Testing. See Main Rod for "Checking formulae for main and side rods." Adopted as standard by the A. R. M. M. A. in 1914.

Side Sheet. See Firebox Side Sheet.

Side Sheet Angle Iron. A steel angle bar or post to which one of the sides of a tender tank is riveted. See Tank Angle.

Side Sheet Step Support. A bracket secured to the side of a boiler for holding a step.

Side Sill. 1, Figs. 1762-1766. One of the longitudinal outside sills or members of a tender frame, made of either wood or steel.

Side Tank Locomotive. Fig. 23. A locomotive having water tanks attached to both sides of the boiler and usually operated without the usual tender. Generally used in contractor's, industrial and suburban services and built with various wheel arrangements.

Side Water Space (Boilers). 25, Figs. 152-186. The space formed by the firebox side sheet, mud ring and outside firebox sheet. See Water Space.

Sight Feed Lubricator. Figs. 1289-1315. A device for supplying oil to the cylinders, steam chest and other moving parts surrounded by live steam by admitting drops of oil at regular intervals into small steam pipes or conduits which carry the lubricant to the wearing surfaces. The oil is forced through nozzles up through a body of condensed steam in the lubricator, and in rising through the water can be seen through a glass bull's-eye or short glass tube. The amount of oil flowing can thus be determined at all times and regulated according to need by needle valves under the nozzles. Commonly three or more nozzles are combined in one lubricator, one being used for the steam chest on each side and the third for the air compressor, or held in reserve.

Signal. See Train Air Signal, Electro-Pneumatic Signal System.

Signal Fixture. 194, Figs. 101-140. A bracket or holder on engine and tender for carrying lamps, flags or distinguishing markers of any kind. Called also signal lamp fixture and signal lamp holder.

Signal Lamp. See LAMP.

Signal Lamp Fixture. A bracket on either side of the smokebox and on the two rear corners of the tender to hold signal lamps.

Signal Pipe (Train Air Signal Apparatus). A continuous pipe running from car to car through the train, substantially a duplicate of the brake pipe, but working with a much lower pressure of air. The signal pipe couplings are also similar to brake pipe hose couplings, but are arranged so that they will not couple with them.

Signal Pipe Cut-out Cock (Train Air Signal Apparatus). A cut-out cock placed in the signal pipe at each end of the locomotive for closing the signal pipe when the signal pipe hose coupling at that end is not in use. Similar to an ANGLE COCK.

Signal Valve (Train Air Signal Apparatus). Fig. 1547. A valve attached to a branch from the signal pipe, which, on the opening of the car discharge valve in any car, and the consequent reduction of pressure in the signal pipe, permits the air to escape to blow the signal whistle. On motor cars this valve and whistle are placed in the cab at each end of the car.

Signal Whistle. Fig. 1548. (Train Air Signal Apparatus). See SIGNAL VALVE and WHISTLE.

Signals. The lanterns, flags, torpedoes and fuses used for making signals, and carried as part of the equipment of a locomotive.

Sill. A piece of wood or steel forming part of a tender frame. Four or six longitudinal sills are commonly used in wooden frames, while with steel construction fewer may be employed. The center pieces are often called the draft sills. See CENTER SILL, END SILL, INTERMEDIATE SILL and SIDE SILL.

Sill Step. See SAFETY APPLIANCE STANDARDS.

Single Plate Wheel. A cast iron wheel, in which the sub and tire are united by only a single plate, which is strengthened usually by ribs, called brackets, or sometimes by corrugations. See WHEEL.

Siphon. A steel pipe to which the water scoop of a tender is attached, passing through it and having the upper end bent over to deliver water into the tank. Also called siphon pipe.

A siphon is placed between a steam gage and the boiler to prevent the steam reaching the inside of the gage. With a siphon, only water can actually enter the bent tube of the gage.

Siphon Pipe Support. A bracket fastened on the inside of a tender tank to hold the siphon pipe or siphon.

Six-Wheel Switcher (0-6-0 Type). Figs. 1, 11-14, 102-103. A locomotive having three pairs of coupled driving wheels, but no front or trailing truck. Used for switching purposes. This type is frequently built with either side or saddle tanks and operated without the usual tender.

Slab Frame. A locomotive frame forged with a deep and narrow section in order to give sufficient space for a firebox, valve gear, etc. See FRAME.

Slack Adjuster. See AUTOMATIC SLACK ADJUSTER.

Slash Bar. Fig. 2303. A long, heavy poker used for breaking up lumps of coal in a fire. Frequently bent in order to reach the grate under the fire door.

Slide Valve (Triple Valve). 3, Fig. 1441. A plain slide valve, controlled in its motion by the piston, by means of which the air is admitted to and exhausted from the brake cylinder, applying and releasing the brake.

(High Speed Brake.) See REDUCING VALVE.

Figs. 1a, Figs. 648-761. Figs. 672-676. Fig. 686, 690-694. A box-shaped iron casting with a semi-cylindrical cavity in it communicating with the bottom surface which forms the valve face. It is moved backward and forward in a steam chest by a valve rod and stem, and it admits steam to and exhausts it from a cylinder. The top of the valve has two pairs of metal strips set in it that rub against a metal plate, called a balance plate, bolted to the under side of the steam chest cover. This device takes the excess pressure off the top of the valve when the engine is using steam, and thereby makes less resistance to be overcome by the valve gear. See STEAM CHEST BALANCE PLATE. Slide valves are sometimes made with a passage through them from one end to the other for the purpose of admitting steam to either port from the opposite end of the valve and thereby getting more steam in the cylinder at short cut-offs than is possible with an ordinary slide valve. This type is called the ALLEN VALVE, which see. Often called D valve.

Slide Valve Feed Valve (Air Brake). Figs. 1428-1429. Also called feed valve, reducing valve and slide valve reducing valve. A valve which automatically maintains the pressure of air supplied through the brake valve to the automatic brake system. It may be attached either to the brake valve or placed in the piping between the main reservoir and the brake valve.

Slide Valve Reducing Valve. See FEED VALVE.

Sliding Door. A door opened by sliding sideways instead of swinging on hinges. Such doors are sometimes used at the back of cabs. They are hung by a hook called the door hanger, which slides on the top door track.

Sling Stay. 14, Figs. 152-186. A boiler stay attached at each end with a pin fitting through a hole in a tee or channel bracket on the boiler plates and a corresponding hole in the end of the stay. It gives some degree of flexibility and allows the plates to contract and expand freely and independently. Usually placed over the crown sheet.

Sling Stay Channel. A commercial channel iron or a bent plate riveted to the boiler plates and to which the sling stays are fastened.

Sling Stay Tee. 15, Figs. 152-186. A commercial tee iron riveted to a boiler plate and used to support one end of a sling stay.

Smokebox. 175, Figs. 101-140; 43, Figs. 152-186; Figs. 361-373; 13, Figs. 361-407. The forward portion of a boiler to which the products of combustion pass from the tubes before being discharged through the stack. Frequently called front end. See EXTENDED SMOKEBOX.

Smokebox Back Ring. 48, Figs. 152-186; 30, Figs. 361-407. A steel or iron ring to which the back edge of a smokebox and the front tube plate or front edge of the boiler shell are secured, forming the joint between the boiler shell and the smokebox shell.

Smokebox Bottom Liner. 46, Figs. 152-186. A plate or pad riveted on the inside and at the bottom of the smokebox shell to strengthen it where the steam pipe opening is cut out and also to prevent wear on the smokebox shell by the abrasive action of cinders.

Smokebox Brace. 203, Figs. 101-140. A heavy steel rod fastened to the smokebox at one end and to the front bumper or frame at the other. One is usually placed on each side of a smokebox. Also called front boiler brace.

Smokebox Cleaning Hole. See Cleaning Hole.

Smokebox Cleaning Hole Cover. See Cleaning Hole Cover.

Smokebox Crane. 165, Figs. 101-140. A swinging arm pivoted to the smokebox and carrying on it a chain hoist for conveniently handling parts around the front end of the locomotive in case of break downs.

Smokebox Door. 238, Figs. 101-140; 22, Figs. 361-407. A circular door hinged at the side of the smokebox front, and held in place by clamps held by nuts screwed on studs set in the smokebox front, or by hinged bolts fitting in radial slots in the edge of the door. Usually made of cast iron or pressed steel. Also called front end door.

Smokebox Door Catch. A bent piece of metal used to fasten a smokebox door to a smokebox front.

Smokebox Door Clamp. 51, Figs. 361-407. A small forging or casting in the form of a clamp through which a bolt passes, fastening it to the smokebox front. The clamp turns about the bolt and can be placed so that one end laps over the smokebox door while the other rests on the smokebox front and by tightening a nut on the bolt the smokebox door is fastened securely to the smokebox front. By loosening the nut and turning the clamp about the bolt the door can be opened without entirely removing the bolts or clamps.

Smokebox Door Handle. An arm attached to a smokebox door to operate the catch and to swing the door open.

Smokebox Door Hinge. 22b, Figs. 361-407. One or two hinges riveted to a smokebox door and held by pivots passing through projections or lugs on the smokebox front.

Smokebox Door Liner. A metal plate or sheet riveted on the inside of a smokebox door to avoid overheating it by the accumulation of sparks in the front end.

Smokebox Draft Regulating Damper. Figs. 363, 364. A damper placed in the smokebox for the purpose of regulating the draft.

Smokebox Extension. A cylindrical ring secured at the front of a smokebox, thus extending or lengthening it 20 or 30 inches and providing space for the accumulation of sparks or cinders which if thrown out of the stack might cause fires near the track. See Extended Smokebox.

Smokebox Front. 5, Figs. 101-140; 21, Figs. 361-407; Figs. 374-376. The cast iron or pressed steel front of a smokebox, usually somewhat convex. It has a large circular opening, closed by a hinged door, through which access can be had to the steam and exhaust pipes, draft appliances and tubes.

Smokebox Front Door Washer. A gasket of some heat resisting material placed under the edge of a smokebox door to make an air-tight joint with the front.

Smokebox Front Ring. 47, Figs. 152-186; 20, Figs. 361-407. A heavy ring riveted inside the front edge of a smokebox to form a bearing for attaching the smokebox front.

Smokebox Joint Ring. 77, Figs. 152-186; 19, Figs. 361-407. See Smokebox Middle Ring.

Smokebox Middle Ring. 77, Figs. 152-186. A heavy ring inside a smokebox sometimes used to connect the two plates of which the smokebox is built up. Usually used in extended smokeboxes.

Smokebox Netting. Fig. 378. A network of wire having meshes from ⅜ inch to ½ inch square, placed in the front end of the locomotive to prevent the sparks from entering the smokestack. The netting is usually provided with a door, so as to give ready access to the upper part of the steam pipes and exhaust nozzles. Sheet steel with perforations or meshes stamped out is frequently used. Also called deflector. British, spark arrester.

Smokebox Netting Basket. 50, Figs. 361-407. A cylindrical basket made of netting placed around the exhaust nozzle and supported from the table plate to prevent sparks being thrown out of the stack.

Smokebox Netting Manhole. An opening, with a door, in the netting, to give access to the tubes or steam pipes without removing the whole netting.

Smokebox Netting Manhole Frame. A metal frame bolted to the netting around the manhole to which the netting manhole door is attached.

Smokebox Perforated Plate. Fig. 380. See Smokebox Netting.

Smokebox Ring. 30, Figs. 361-407. Any one of the three rings, back, front and middle, used in building up a smokebox.

Smokebox Shell. 42, Figs. 152-186. The sheet or plate that forms the smokebox.

Smokebox Steam Pipe Connection. Primarily a stuffing box forming an air tight joint where an outside steam pipe passes through the smokebox shell to connect to the steam chest, also allows considerable flexibility and movement of the smokebox and steam pipe.

Smokebox Superheater. A superheater placed in the smokebox and utilizing the heat in the waste gases for superheating the steam before it enters the cylinders. Usually made in the form of a large drum with fire tubes passing lengthwise through it. See Superheater.

Smoke Stack. 4, Figs. 101-140; 361-407; Figs. 410-419. A cast iron, sheet steel or pressed steel pipe or chimney, secured to the top of a smokebox to convey the products of combustion and exhaust steam from the smokebox to the outer air. The size and shape depends greatly on the fuel used and the clearance limits.

Smoke Stack Barrel. 1, Figs. 411-420. The straight portion of a smoke stack. Called also smoke stack body.

Smoke Stack Base. 4, Figs. 411-420. A plate or foundation casting secured to a smokebox to support the barrel of a stack which is fastened to it by bolts. In some designs the base is cast solid with the barrel.

Smoke Stack Base Bolt. A bolt passing through a lug on the barrel of a stack and through a corresponding lug on the base.

Smoke Stack Bead. 2, Figs. 411-420. A small flare around the top of a smoke stack for ornamental purposes.

Smoke Stack Cone (Diamond Stack). 12, Figs. 411-420. An inverted conical casting supported in the bell of a diamond stack over the barrel mouth to break up large sparks which are thrown out.

Smoke Stack Hood or Smoke Deflector. Fig. 419; 20, Figs. 411-420; Fig. 420. A movable elbow attached to the top of a stack which can be thrown down clear

when running in the open and can be raised to deflect the smoke and cinders back over the engine when running through tunnels.

Smoke Stack Lift Pipe. 5, Figs. 411-420. An extension of the smoke stack inside the smokebox and coming down close to the exhaust nozzle where no petticoat pipe is used.

Smoke Stack Liner. A cylindrical steel casing sometimes used inside a smoke stack to protect it from abrasion by sparks.

Smoke Stack Netting. 15, Fig. 414. A mesh of wires placed across the bell of a diamond stack to prevent large sparks from being thrown out.

Smoke Stack Opening. 44, Figs. 152-186. An aperture in the top of a smokebox shell around which the smoke stack or smoke stack base is fitted.

Smoke Stack Top. 7, Figs. 411-420. The upper portion of a stack on top of the barrel or body.

Snap Ring. 6, Figs. 800-809. A packing or piston ring that is in one piece and has a slot or cut through one portion of it, whereby it can be opened and sprung or snapped into place.

Snow Flanger. Figs. 1097-1099, 1101. A plate of iron or steel attached to the pilot of a locomotive to scrape away snow and ice on the sides of the heads of the rails so as to make room for the flanges of the wheels. The term is sometimes applied to an adjustable plow fitted to a locomtive or car which extends low down on the track and has a plate or tool for cutting and scraping the snow and ice from the rail.

Snow Plow. Figs. 1097, 1098, 1100. A detachable plate of iron or steel applied to a pilot for the purpose of removing snow from the track.

Spanner Wrench. See Wrench.

Spark Arrester. Figs. 372-373. A device placed in a locomotive smokebox for the purpose of preventing the throwing of live sparks from the smoke stack. See Netting.

Spark Cleaning Hole. See Cleaning Hole.

Spark Hopper Pipe. See Cinder Pipe.

Spark Pocket. See Cinder Pocket.

Specifications for Locomotive Driving and Engine Truck Axles (A. R. M. M. A. Standard). See Axles.

Specifications for Iron and Steel Locomotive Boiler Tubes (A. R. M. M. A. Standard). See Tubes.

Specifications for Foundry Pig Iron (A. R. M. M. A. Standard). See Pig Iron.

Specifications for Boiler and Firebox Steel (A. R. M. M. A. Standard), See Steel.

Specifications for Locomotive Forgings (A. R. M. M. A. Standard). See Forgings and Steel Blooms and Billets.

Specifications for Blooms and Billets (A. R. M. M. A. Standard). See Steel Blooms and Billets.

Specifications for Axles (A. R. M. M. A. Standard). See Axles.

Specifications for Locomotive Cylinder Castings, Cylinder Bushings, Cylinder Heads, Steam Chests, Valve Bushings and Packing Rings (A. R. M. M. A. Standard). See Cylinder Castings.

Specifications and Tests for Cast Iron Wheels (A. R. M. M. A. Standard). See Wheels.

Specifications for Determining the Size of Safety Valves, Their Application to Locomotives and Their Repairs (A. R. M. M. A. Standard). See Safety Valve.

Spectacle Plate. A name sometimes used for a Guide Yoke.

Speed Recorder. Figs. 1237, 1238. A device for indicating the speed at which a locomotive is traveling. Placed in the cab for the engineman's guidance. Required by law in some States. See Magneto-Speed Indicator.

Splice. See Frame Splice.

Split Key. A form of pin which is self-fastening, consisting essentially of two parallel strips or bars of metal, which, when united, constitute one pin, but which tend to spring apart, so that the pin cannot be withdrawn, without the use of considerable force.

Spoke Wheel. Figs. 897-907. A wheel, the rim or tire of which is connected with the hub by spokes instead of one or more plates. These spokes are sometimes made of solid cast iron, in others they are cast hollow, and in still others are made of wrought iron or cast steel. All driving and most trailing engine truck wheels are spoke wheels.

Spool. The central or body portion of a piston valve.

Spring. 1, Figs.933-960; Figs. 965-975; 14, Figs. 1014-1020; 10, Figs. 997-1000; Figs. 2055-2064. An elastic body to resist shocks. They are divided into two general groups, elliptical and spiral. Driving springs, or those that transmit the load to a driving axle, are made of flat steel plates from 3 to 5 inches wide and are half elliptic. Similar springs are used for engine and tender trucks, though on tender trucks full elliptic are frequent. Coil or spiral springs are used for driving axles at the end of an equalizer resting on the box or frame. Also for coupler, draft springs and buffer springs. See Adjusting Spring, Bolster Springs, Buffer Spring, Draft Spring, Elliptic Spring, Graduated Spring.

Spring Band (Elliptic Springs). 3, Figs. 933-960. A wrought iron strap which surrounds the spring plates at the center.

Spring Block. A piece of wood or iron used as a stop or distance piece above or below a spring.

Spring Cap. A cup-shaped piece of cast or wrought iron for holding the top of a spring and against which the latter bears. They are further distinguished by the name of the spring, as bolster spring cap, etc. The spring seat comes below the spring, but both these parts are very commonly called spring plates, especially in large group springs.

Spring Dampener. Fig. 2061. A device to make the coil spring do the work of the elliptic. It retards the sharp, quick vibration of the coil spring and gives it a soft and easy movement.

Spring Hanger. 119, Figs.101-140; Figs. 957, 958; 16, Figs. 976-987; 17, Figs. 1027-1031. A bar or link attached to the frame or to one end of an equalizer for holding or suspending the end of a spring. Called also spring link. See Driving Spring Hanger.

(Engine Trucks.) 11, Figs. 997-1000. A link fastened to the equalizer at one end by a pin or gib and at the other to a truck spring.

Spring Hanger Gib. 208, Figs. 101-140; 6, Figs. 933-960. A flat piece of steel passing through an opening near the end of a spring hanger to connect it with an equalizer.

Spring Hanger Link. A bar or link bolted to the end of a spring hanger to connect it with an equalizer

above or below it; as when the spring is above and the equalizer below the frame. Also called equalizer hanger.

Spring Link Hanger. See Spring Hanger Link.

Spring Link Seat. A plate or block placed above or below a bar of the main frame, holding a pin that passes through a spring hanger or equalizer hanger.

Spring Hanger Pin. 12, Figs. 997-1000. A pin passing through a spring hanger and serving as its means of support.

Spring Plank. 20, Figs. 1913-1920. A transverse member underneath a truck bolster and on which the bolster springs rest. Also called sand plank or sand board. In metal trucks, iron spring plank bars take the place of the wooden sprink plank. A swing spring plank is used in swing motion trucks. In rigid bolster trucks the spring plank is bolted to the lower arch bar of the truck frame.

Spring Plank Bearing. A casting on which a spring plank rests, and which is supported by the lower swing hanger pivot. Also called crossbar casting or spring plank, carrier.

Spring Plate. 4c and 4d, Figs. 1913-1920. A common term for spring seats and caps, especially those of considerable size, as for bolster springs. They are often provided with spring plate lugs to hold the spring in place.

Spring Rigging. Figs. 933-964. The arrangement of springs and equalizers in any particular design of locomotive. See Rule 42, Locomotives, Inspection and Testing.

Spring Seat. 81, Figs. 101-140; 4d, Figs. 1913-1920. A cup-shaped piece of cast or wrought iron, on which the bottom of a spring rests. See Spring Plate. They are further distinguished by the name of the spring for which they serve, as bolster spring seat, equalizer spring seat, etc.

Spring Seat Chafing Iron. A metal plate inserted between a spring and the frame to prevent undue wear or cutting by the relative motion of the two.

Sprinkler. A device consisting of a valve and hose connection tapped into the boiler below the water line for forcing water through a hose and thus wetting the coal.

Sprinkler Hose Nozzle. A perforated metal end attached to the sprinkler hose

Sprinkler Valve. Fig. 1227. A valve used to open and close the sprinkler hose connection.

Square Root Iron. A term applied by manufacturers to angle iron in which the corners are brought to a sharp angle and not rounded off. Square root iron is one form of angle iron, but is never meant when that term alone is used.

Squirt Hose. Figs. 1213, 1215, 1217. A flexible rubber tube about 10 feet long, attached to the sprinkler connection on the boiler head and having a nozzle on the other end for sprinkling coal in the tender.

Stack. See Smoke Stack.

Staggered Riveting. Fig. 203. A name applied to a method of setting rivets in a boiler seam. Two parallel rows of rivets are put in, and each rivet in either row is opposite the space between two rivets in the other row. See Chain Riveting.

Standard. A name sometimes applied to the Column or Bolster Guide Bar.

(Of A. R. M. M. Assoc.). A number of standard details of locomotive and tenders adopted by the American Railway Master Mechanics' Association. See Master Mechanics' Standards.

Standard Gage. The most common distance between the rails of railroads, which is 4 ft. 8½ in. See Gage.

Starting Valve. Fig. 614. In compound locomotives, a valve operated from the cab to admit live steam or steam directly from the boiler to the steam passages of the low-pressure cylinder in order to obtain maximum tractive effort in starting a train. When a moderate speed has been attained, the starting valve should be closed and communication opened between the high-pressure exhaust and low-pressure steam chest, thus causing the engine to operate as a compound.

Staybolt. 28 and 29, Figs. 152-186; Figs. 220-230. A bolt with both ends threaded used for staying the inner and outer plates of a firebox. The ordinary stay bolt is screwed through both plates and its projecting ends are hammered and riveted over the plates. Flexible stay bolts are used to afford some elasticity between the inner and outer firebox sheets, whose different rates or degrees of expansion cause numerous breakages of stay bolts. Hollow stay bolts are used for admitting air above the fire. It is usual to drill a ⅛-in hole to a depth of about ¾-inch in the outer ends of stay bolts in order to more easily discover a broken stay bolt by the escape of steam and water. See Flexible Stay Bolt, Spiral Stay Bolt.

Staybolt Testing. See Boiler Inspection.

Steam. The vapor of water formed by its ebullition when heat is imparted to it. The temperature of ebullition, or at which water bolts, depends upon the pressure to which it is subjected. At atmospheric pressure the boiling temperature is 212 deg Fahr.; at 100 lbs. per square inch it is 338 deg., and at 200 lbs. 388 deg. The formation of steam in a locomotive boiler is a physical change caused by the application of heat; but there also occurs a chemical change, due to the same cause, which results in precipitating the mineral salts held in solution in the water when it enters the boiler, forming a hard crust or scale on the plates and tubes. This scale is a bad conductor of heat, and if it accumulates to any extent, seriously affects the efficiency of the boiler.

Steam-Acetylene Headlight. Figs. 1687-1688.

Steam Chest. 11, Figs. 101-140; 31, Figs. 579-605; Fig. 651. 49, Figs. 648-761; 9, Figs. 697-701. A cast-iron chamber containing either a slide or a piston valve controlling the admission of steam to a cylinder. Piston valve steam chests are cast in the same piece as the cylinder and saddle. In recent designs for slide valve steam chests the valve stem guides are combined in the same casting, thus making them self-centering. See Slide Valve, Piston Valve and Cylinder Castings.

Steam Chest Balance Plate. A cast-iron plate bolted to the under side of the cover of a steam chest and against which a set of packing strips, set in the top of the slide valve, bear so as to make a steam-tight fit. The balance plate reduces the area of the top of the valve exposed to boiler pressure, and thus allows the valve to be moved more easily.

Steam Chest Bushing. 31c, Figs. 579-605; Figs. 653, 654, 661; 49a, Figs. 648-761. A thin metal lining for a piston valve steam chest forming a wearing surface or seat for the valve and also containing the valve ports.

Steam Chest Casing. Figs. 658, 659; 51, Figs. 648-761. A thin sheet steel jacket or sheathing placed on a steam chest to protect the lagging from injury.

Steam Chest Cover. 12, Figs. 101-140; Fig. 650. An Iron casting covering a slide valve steam chest and secured to it by stud bolts and nuts.

Steam Chest Cover Gasket. 52, Figs. 648-761. Usually a thin strip of copper wire or ribbon put in between the steam chest and the steam chest cover to make a steam-tight joint.

Steam Chest Head. 12, Figs. 101-140; Figs. 652, 655, 656, 657. A circular casting similar in every respect to a Cylinder Head, which see, closing one end of a piston valve steam chest. The front head is solid and usually tapped for a water relief valve, while the back head has a hole in it through which the piston valve stem works in a stuffing box. In recent designs the back head is combined with the valve stem guides, thus making them self-centering.

Steam Chest Oil Plug. A brass fitting screwed into a steam chest or steam chest cover and attached to the end of the cylinder oil pipe by a coupling nut or union.

Steam Chest Relief Valve. See Relief Valve.

Steam Chest Seat. 31a, Figs. 579-605. In a slide valve steam chest the bearing on the cylinder casting on which the steam chest rests.

Steam Chest Valve Seat. 34, Figs. 579-605, 634-640. That part of a cylinder casting in which the steam and exhaust ports terminate and on which the slide valve moves. On locomotives having piston valves the seat is a cylindrical bushing, with openings in it communicating with the steam and exhaust passages.

Steam Cylinder (Air Compressor). The admission of steam to this cylinder is controlled by the reversing valve which operates the main slide valve. See Cylinder.

Steam Cylinder Gasket. See Gasket.

Steam Cylinder Head (Air Compressor). The upper end or cover of the steam cylinder. The main steam valve and reversing valve are bolted to the top of it. Usually called the top head.

Steam Gage. Figs. 1186-1200. A device for showing the steam pressure in a boiler, consisting of a slightly flattened bent tube filled with steam or water from the boiler and which tends to alter its curvature with any change of pressure. The free end of the tube is connected by an arm to a toothed sector which meshes in a small pinion to which an index or hand is fastened. A very slight change in curvature is thus multiplied and is easily observable on the dial or face of the gage over which the hand or pointer moves. See Boiler Inspection.

Steam Gage Cock. A stop cock in the steam pipe between the boiler and the steam gage.

Steam Gage Fittings. The pipes, couplings, outlets, turrets, nuts, etc., used to attach a steam gage to a locomotive boiler.

Steam Gage Lamp. See Gage Lamp.

Steam Gage Stand. 160, Figs. 101-140; Figs. 1198, 1200. A bracket secured to the boiler inside the cab for the attachment of a steam gage or gages.

Steam Generator. See Electric Steam Generator.

Steam Heat Apparatus. Figs. 1242-1288. An arrangement of valves and pipes by means of which steam is taken from a locomotive boiler, through a reducing valve, and conducted through a pipe to each car of a passenger train for the purpose of heating the cars in cold weather.

Steam Heat Couplings. Figs. 1244, 1246, 1255, 1256, 1257-1263, 1270, 1271-1278, 1282. A fitting attached to a short hose on the end of a steam pipe from the locomotive that couples with a similar fitting on a tender or car.

Steam Heat Gage. Figs. 1279, 1280, 1287. A pressure gage connected to the pipe supplying steam for heating a train, to enable an engineman to ascertain the pressure of steam used for that purpose.

Steam Heat Reducing Valve. Figs. 1243, 1245, 1250, 1264-1266, 1268, 1285, 1288. A valve attached to the boiler head or to a turret on the boiler that can be set so as to supply steam for heating a train at moderate pressures according to the requirements of weather and length of train.

Steam Hose. A piece of tubing or hose for flexibly connecting the train heating pipes between engine and tender or between a tender and a car.

Steam Lap. See Outside Lap.

Steam Leaks. See Boiler Inspection.

Steam Motor Car. See Motor Car.

Steam Passage (Cylinders). 32 and 33, Figs. 579-605. Cored openings in a cylinder saddle casting leading from the steam pipe in the smokebox to the steam chest. The exhaust steam passage conveys the exhaust steam from the valve chamber to the exhaust pipe.

Steam Passage Drain. 41, Figs. 579-605. A hole in the cylinder saddle leading to the steam passages for the purpose of draining them of water.

Steam Pipe. 9, Figs. 101-140; 12, Figs. 317-319; Figs. 308, 309, 315-324; 12, Figs. 361-407. One of two pipes that conduct steam from the dry pipe tee or nigger-head in the smokebox to the cylinder saddle. Usually made of cast iron. In order to permit a little adjustability in fitting and to allow for contraction and expansion steam pipes are made with ball joints or spherical ends where they fit into the tee pipe and cylinder saddles. Outside steam pipes are designed to pass through the side of the smokebox shell and enter the top of the steam chest, thus giving more room inside the smokebox and shortening the steam passages. See Auxiliary Steam Pipe.

Steam Pipe Ball Joint Washer. See Steam Pipe Ring.

Steam Pipe Elbow. Figs. 320-321. A flanged pipe fitting making a 90 degree turn used to connect the outside high-pressure steam pipe on a Mallet locomotive to the high-pressure steam chest at one end and to the smoke-box at the other, where it makes a joint with the steam pipes in the smokebox.

Steam Pipe Expansion Joint. 297, Figs. 101-140; Figs. 306, 311. A joint in a steam pipe so constructed that the pipe can vary its length and position while remaining steam-tight. It consists of two pipes one of which fits inside of the other. The outside pipe contains a stuffing box in which packing rings are fitted around the inside pipe and held in place by a gland. In some designs the inside pipe is surrounded with a brass sleeve. Used on Mallet locomotives to convey steam between the two swiveling units and allowing the steam pipes to move when the engine is passing through curves.

Steam Pipe Ring. 44, Figs. 317-319. An iron or brass

ring, having one side flat and the other ground to a concave or convex spherical surface to form a flexible joint at either end of a steam pipe. Also called steam pipe ball joint washer.

Steam Pipe Slip Joint. See STEAM PIPE EXPANSION JOINT.

Steam Pipe Stud. 12a, Figs. 317-319. A threaded stud tapped into the cylinder saddle around the steam passage opening to which the steam pipe is attached.

Steam Pipe Support. 289, Figs. 101-140; Fig. 324. A bracket attached to the boiler shell for supporting the outside high-pressure steam pipe.

Steam Pipe Union (Air Compressor). The pipe coupling to which either the compressor governor or steam pipe connection is made.

Steam Port. 35, Figs. 579-605; 54, Figs. 648-761. An opening in a valve seat or valve chamber at the mouth of a cored passage leading to either end of a cylinder through which live steam enters. See EXHAUST PORT.

Steam Pressure. The pressure under which the boiler operates as shown on the steam gage. In giving locomotive dimensions usually referred to as working steam pressure.

Steam Storage Locomotive. Figs. 94, 145. A steam locomotive of conventional design, except the boiler, which has no firebox. Steam is stored in the boiler from an outside source and admitted to the cylinders at a reduced pressure as required. Used where fire and sparks are dangerous.

Steam Valve or **Main Steam Valve** (Air Compressor). A device for controlling the admission and exhaust of steam to and from the steam cylinder of the air compressor by means of the REVERSING VALVE, which see. See MAIN STEAM VALVE.

(Compresosr Governor) A disk valve in the steam pipe to the air compressor. It is attached to the rod of a piston above which air pressure is admitted by the compressor governor. A coil spring opens the steam valve as soon as the main reservoir pressure is sufficiently reduced, and thus start the compressor, which pumps up main reservoir pressure until it overcomes the tension of the spring and closes the valve.

Steel. "A variety of iron intermediate in composition and properties between wrought iron and cast iron (containing between one-half of 1 per cent. of carbon) and consisting of an alloy of iron with an iron carbide. Steel, unlike wrought iron, can be tempered and retains magnetism. Its malleability decreases and fusibility increases with an increase in carbon."—Webster.

Steel Axle Specifications. See AXLE.

Steel Back Brake Shoe. A brake shoe having a thin steel strip cast into the back of it which holds the parts together in case they break when the shoe is worn thin. See BRAKE SHOE.

Steel Blooms and Billets. The American Railway Master Mechanics' Association adopted standard specifications in 1905, which are as follows:

MATERIAL

1. Open-hearth steel.

PHYSICAL REQUIREMENTS

2. Grade "A":
   Tensile strength, 70,000 lbs. per square inch.
   Elongation in two inches, 20 per cent.

3. Grade "B":
   Tensile strength, 80,000 lbs. per square inch.
   Elongation in two inches, 17 per cent.

CHEMICAL ANALYSIS

4. Grade "A":

Carbon	.25 to .40 per cent.
Phosphorus, not to exceed	.06 per cent.
Sulphur, not to exceed	.06 per cent.
Manganese, not to exceed	.60 per cent.

5. Grade "B":

Carbon	.35 to .50 per cent.
Phosphorus, not to exceed	.05 per cent.
Sulphur not to exceed	.05 per cent.
Manganese, not to exceed	.60 per cent.

TESTS

6. One test per melt will be required, the test specimen to be cut cold from the bottom, parallel to its axis and half-way between the center and the outside. The standard turned test specimen, ½ in. in diameter and 2 in. gage length, shall be used to determine the physical

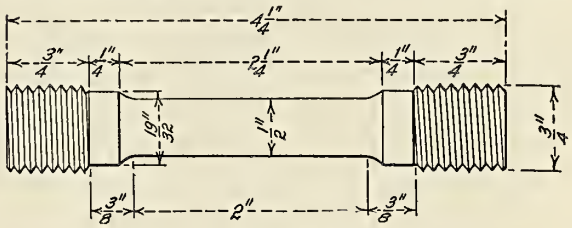

FIG. 1.

properties. (See Fig. 1.) Drillings or turnings from the tensile specimen shall be used to determine the chemical properties.

STAMPING AND MARKING

7. Each bloom or billet must have heat number and manufacturer's name plainly stamped on one end, with stamps not less than ⅜ in., and have order number plainly marked with white lead.

INSPECTION

8. Blooms and billets must be free from checks, pipes and surface defects. Any blooms or billets chipped to a depth greater than ½ in. will be rejected.

9. Any billet or bloom failing to meet the above requirements will be rejected and held subject to disposal by manufacturers.

10. Inspector to have the privilege of taking drillings from the center of the top bloom or billet of the ingot in order to determine the amount of segregation.

Grade "A" is intended for rod straps and miscellaneous forgings.

Grade "B" is intended for driving and truck axles, connecting rods, crank pins and guides.

Steel, Boiler (Specifications for). The American Railway Master Mechanics' Association in 1894 adopted specifications for the steel entering into the construction of boilers and fireboxes. These specifications were revised in 1904 and again in 1915 and are now as follows:

1. *Scope.*—These specifications cover two grades of boiler steel and shall be designated as flange steel and firebox steel.

I. MANUFACTURE

2. *Process.*—The steel shall be made by the open-hearth process.

II. CHEMICAL PROPERTIES AND TESTS

3. *Chemical Composition.*—The steel shall conform

to the following requirements as to chemical composition.

	Flange.	Fire-box.
Carbon		0.12–0.25 per cent
Manganese	0.30–0.60 per cent	0.30–0.50 per cent
Phosphorus, not over		
	acido .05 per cent	0.04 per cent
	basic 0.04 per cent	0.035 per cent
Sulphur, not over	0.05 per cent	0.04 per cent
Copper, not over		0.05 per cent

4. *Ladle Analysis.*—An analysis shall be made by the manufacturer from a test ingot taken during the pouring of each melt. A copy shall be given to the purchaser or his representative. This analysis shall conform to the requirements in Section 3.

5. *Check Analysis.*—Analysis may be made by the purchaser from a broken tension test specimen representing each plate as rolled, which shall conform to the requirements specified in Section 3.

III. PHYSICAL PROPERTIES AND TESTS

6. (a) The steel shall conform to the following requirements as to tensile properties:

	Flange.	Fire-box.
Tensile strength lb. per sq. in.	56 000–85 000	52 000–62 000
Field point lb. per sq. in.	0.5 tens. str.	0.5 tens. str.
Elongation in 8 in. min. per cent	$\frac{1\,5600\,000}{\text{Tens. str.}}$	$\frac{1\,500\,000}{\text{Tens. str.}}$

(b) The yield point shall be determined by the drop of the beam of the testing machine.

7. *Modification in Elongation.*—For material over ¾ in. in thickness a deduction of 0.5 from the percentages of elongation specified in Section 6 (a) shall be made for each increase of ⅛ in. thickness above ¾ in. to a minimum of 20 per cent.

8. *Bend Tests.*—(a) Cold-Bend Tests.—The test specimen shall bend cold through 180 deg. without cracking on the outside of the bent portion as follows: For material 1 in. or under in thickness, flat on itself, and for material over 1 in. in thickness, around a pin the diameter of which is equal to the thickness of the specimen.

(b) Quench-Bend Tests.—The test specimen, when heated to a light cherry red, as seen in the dark (not less than 1,200 deg. F.), and quenched at once in water, the temperature of which is between 80 and 90 deg F., shall bend through 180 deg. without cracking on the outside of the bent portion as follows: For material 1 in. or under in thickness, flat on itself, and for material over 1 in. in thickness, around a pin the diameter of which is equal to the thickness of the specimen.

9. *Homogeneity Tests.*—A sample taken from a broken tension test specimen shall not show any single seam or cavity more than ¼ in. long, in either of the three fractures obtained in the test for homogeneity, which shall be made as follows: The specimen shall be either nicked with a chisel or grooved on a machine, transversely, about 1/16 in. deep, in three places about 2 in. apart. The first groove shall be made 2 in. from the square end; each succeeding groove shall be made on the opposite side from the preceding one. The specimen shall then be firmly held in a vise, with the first groove about ¼ in. above the jaws and the projecting end broken off with light blows of a hammer, the bending being away from the groove. The specimen shall be broken at the other two grooves in the same manner. The object of this test is to open and render visible to the eye any seams due to failure of weld or to interposed foreign matter, or any cavities due to gas bubbles in the ingot. One side of each fracture shall be examined and the length of the seams and cavities determined, a pocket lens being used if necessary.

10. *Test Specimens.*—Tension and bend test specimens shall be taken from the finished rolled material. They shall be of the full thickness of material as rolled, and shall be machined to the form and dimensions shown in Fig. 1, except that bend test specimens may be machined with both edges parallel.

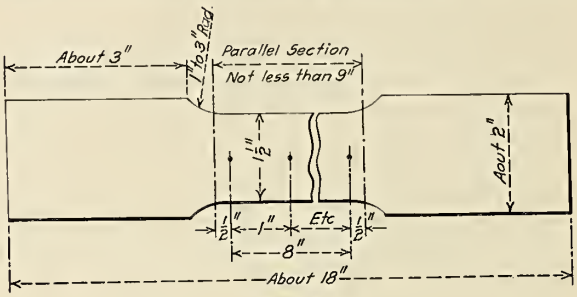

FIG. 1

11. *Number of Tests.*—One tension, one cold-bend and one quench-bend test shall be made from each plate as rolled and in addition one homogeneity test shall be made from each plate made into fire-box material.

(b) If any test specimen shows defective machining or develops flaws it may be discarded and another specimen substituted.

(c) If the percentage of elongation of any test specimen is less than that specified in Section 7, and any part of the fracture is outside the middle third of the gaged length, as indicated by the scribe scratches marked on the specimen before testing, a retest shall be allowed.

IV. PERMISSIBLE VARIATION IN WEIGHT AND GAGE

12. *Gage.*—The thickness of each plate shall not vary more than 0.01 in. under that ordered.

13. *Weight.*—An excess over the nominal weight corresponding to the dimensions on the order shall be allowed for each plate, if not more than that shown in the following table, 1 cu. in. rolled steel being assumed to weigh 0.2833 lb.

ALLOWABLE EXCESS (EXPRESSED AS PERCENTAGE NOMINAL WEIGHT.)

Thickness Ordered In.	Nominal Weight Lb. per sq. ft.	For width of Plate, as follows: Under 50″	50 to 70″ excl.	70″ or over	Under 75″	75 to 100″ excl.	100 to 115″ excl.	115″ and over
⅛ to 5/32	5.10 to 6.37	10	15	20	..	..	..	..
5/32 to 3/16	6.37 to 7.66	8.5	12.5	17	..	..	..	..
3/16 to ¼	7.65 to 12.20	7	10	15	..	..	..	..
¼	10.20	..	..	..	10	14	18	..
5/16	12.75	..	..	..	8	12	16	..
⅜	15.30	..	..	..	7	10	13	17
7/16	17.85	..	..	..	6	..	10	13
½	20.40	..	..	..	5	7	9	12
9/16	22.95	..	..	..	4.5	6.5	8.5	11
⅝	25.50	..	..	..	4	6	8	10
Over ⅝	....	..	..	..	3.5	5	6.5	9

V. FINISH.

14. *Finish.*—The finished material shall be free from injurious defects and shall have a workmanlike finish.

VI. MARKING

15. *Marking.*—The name or brand of the manufacturer, melt and slab number and lowest tensile strength for its grade specified in Section 6 (a) shall be legibly stamped on each sheet or piece. The melt and slat shall be legibly stamped on each test specimen.

VII. INSPECTION AND REJECTION

16. *Inspection.*—The inspector representing the purchaser shall have free entry at all times while work

on the contract of the purchaser is being performed, to all parts of the manufacturer's works which concern the manufacture of the material ordered. The manufacturer shall afford the inspector, free of cost, all reasonable facilities to satisfy him that the material is being furnished in accordance with these specifications. All tests (except check analysis) and inspection shall be made at the place of manufacture prior to shipment, unless otherwise specified, and shall be so conducted as not to interfere unnecessarily with the operation of the works.

17. *Rejection.*—(a) Unless otherwise specified, any rejection based on tests made in accordance with Section 5 shall be reported within five working days from receipt of samples.

(b) Material which shows injurious defects subsequent to its acceptance at the manufacturer's works will be rejected, and the manufacturer shall be notified.

18. Samples tested in accordance with Section 5, which represent rejected material, shall be preserved for two weeks from the date of the test report. In case of dissatisfaction with results of the tests, the manufacturer may make claim for rehearing within that time.

Steel Tired Wheel. A wheel with a steel tire. The tire is shrunk on, bolted, or fastened with retaining rings. See Wheel.

Step. A foot piece for ascending to or descending from an engine or tender or for standing in certain places or positions. Steps take their distinguishing names from their position or use, as bumper step or headlight step. See Safety Applicance Standards.

Step Hanger. A vertical board or metal plate by which the steps are supported from the corner of a tender or from the locomotive frame.

Step Riser. The vertical portion of a step.

Stephenson Valve Motion. Figs. 701-715. See Valve Gear.

Stiffening Liner (Boiler Shell Support). A steel plate, riveted on the bottom of a boiler shell and to the angle piece to which the waist sheet is riveted. It reinforces that part of the boiler shell.

Stiffening Ring. See Tube Sheet Ring.

Stirrup. A ring or bent bar of iron resembling somewhat what the stirrup of a saddle.

A drawbar carry iron in sometimes called a stirrup.

The support placed on a driving box and spanning the frame to carry a driving spring. 11a, Figs. 933-960.

Stoker. Figs. 480-500. A device attached to a locomotive for the purpose of supplying fuel to the grate and lessening the labor of the fireman. There are two general classes, those that supply the fuel from above the grate and those that supply it from below, commonly called underfeed stokers.

The usual overfeed stoker consists of a screw conveyor for carrying the coal from the tender, an elevator for raising it to a point above the fire door, a distribution system for distributing it over the grates, and a regulating system for regulating the quantity of coal supplied and the location in the firebox at which it is placed. The mechanism is driven by a small steam engine located on the boiler back head. In some designs the conveyor is omitted and the fireman transferes the coal from the tender to the hopper from which the stoker is supplied.

The underfeed stoker consists of a screw or finger conveyor for carrying the coal from the tender, and a group of plungers for distributing the coal over the grate through troughs. In some designs screw conveyors are used instead of plungers. A small steam engine drives the entire mechanism.

Frequently a coal crusher is placed on the tender to prepare the coal before it reaches the stoker. This is not necessary when prepared coal is placed on the tender. For complete lists of names of parts see figures referred to above.

Stop Cock (Air Brake). See Angle Cock, Cut-Out Cock.

"Straight-Air" (Air Brake). A term applied to the original form of the Westinghouse air brake, which is still used on engines and tenders.

Straight Air Brake Valve. Fig. 1508. A valve used for operating the locomotive brakes independently of the train brakes.

Straight Top Boiler. Figs. 151-162. A locomotive boiler having the shell of uniform diameter. In many designs the roof sheet slopes toward the back head and in some cases the course immediately ahead of the firebox has a taper on the bottom to furnish more water space around the tubes and combustion chamber.

Strainer. Figs. 1799, 1821, 1822-1824, 1825, 1827, 1829, 1830. A perforated metal cover or plate on the end of a water or air pipe to exclude dirt or foreign particles. A large brass strainer is used in the tender water tank over the end of each suction pipe, so as to exclude foreign matter from the injector feed pipes.

In the air brake system strainers are used on the air inlet of the compressor, on pipe from main reservoir to engineer's brake valve, in triple valve on engine and tender, in high speed brake automatic reducing valve and on train air signal pipe. See Brake Pipe Air Strainer.

Strap. A long, narrow piece or strip of metal usually bent or curved so as to enclose another piece.

On main and side rods, a U-shaped strap bolted and keyed to a rod to hold the brass in place. 20, Figs. 871-883.

Strap Bolt or **Lug Bolt.** A round bolt with a flat bar of iron welded to it, and usually with a hook on the end which serves the purpose of a head. The flat bar has holes in it by which it is attached to a piece of timber or other object by one or more separate bolts or screws.

Stroke. See Piston Stroke.

Stub Back Block. A distance piece of spacing piece fitted into the forked back end of a main rod and secured by a bolt and nut.

Stub Brass. 9 and 12, Figs. 871-883. A brass bearing, made in halves, fitted to the end of a main or side rod and held in place by a strap. It is called back or front stub brass, according to the end of the rod in which it is used. The two halves are also called front or back, according to their location in the strap. Thus the front stub back brass is the back half of the brass bearing at the front or cylinder end of the main rod.

Stub Bushing. 2, Figs. 871-883. A sleeve or cylindrical liner bearing on a crank pin in a rod having a solid stub end, in contrast to one having brasses held by a strap fitted with bolts and keys.

Stub End (Main and Side Rods). Fig. 880-883; 11, Figs. 871-883. The enlargement on the end of a main or side

rod to which the bearing for the crank pin or wrist pin is attached by a strap.

Stub Key. 7 and 14, Figs. 871-883. A key passing through the fork of a main rod for adjusting the brass, in connection with a gib or liner holding the brass in place. Known as front or back stub key, according to the end of the rod on which they are used.

Stub Key Washer. 14a, Figs. 871-883. A ring placed on the threaded end of a stub key and having a nut screwed on it. Used on strap end main or side rods.

Stub Liner. 13, Figs. 871-883. A thin piece of metal inserted between a stub brass and the key by which it is set out or adjusted.

Stub Strap. 20, Figs. 871-883. The strap holding the brass in the end of a side or main rod. Called front or back stub strap, according to its location.

Stub Wedge. 16, Figs. 871-883. A tapering piece of steel, a wedge, or gib bearing against the brass in a main or side rod.

Stub Wedge Bolt. A bolt through the side of a rod stub end to bind against the wedge and prevent it from loosening.

Stuffing Box. 2, Figs. 579-605. A cavity cast in a cylinder head or steam chest forming a cup to hold the packing around a piston rod or valve stem. It has a gland or flanged ring bolted on and surrounding the rod, thus holding the packing in place.

Suction Pipe. 185, Figs. 101-140; 15, Figs. 1818-1820. A pipe conveying water from the tender tank to the injector feed pipe by means of a flexible connection between engine and tender.

Suction Pipe Clamp. A clamp or clasp for coupling the suction hose to the goose neck of a tender.

Superheater. Figs. 421-433. Superheaters may be divided into two classes—fire tube and smokebox The latter type gives only a low degree of superheat and is not used to any great extent. The fire tube or Schmidt type gives a high degree of superheat and is being introduced rapidly on both new and old power in this country. Following is a description of the construction and operation of a fire tube superheater. It consists of a header and a system of superheater pipes arranged in large superheater flues in the locomotive boiler. By this device additional heat is imparted to the saturated steam. By virtue of this additional heat the steam is able to pass through the steam pipes, valves and cylinders without suffering any loss from condensation.

Steam passing from the dry pipe of a locomotive is a saturated vapor and contains a greater or less percentage of moisture. As the temperature is raised by the addition of heat in the superheater, the steam becomes first dry and then superheated. In the superheated state steam has the characteristics of a perfect gas, is a poorer conductor of heat than saturated steam and has a larger volume. The addition of heat in the superheater does not increase the pressure of the steam but, for any given pressure, increases its temperature and volume.

The type of superheater almost universally adopted in locomotive practice is known as the fire tube type. It consists of a header and a system of units or coils and a damper mechanism.

The header is located in the upper part of the smokebox and takes the place of the tee head or "nigger head" used in the ordinary saturated steam engine. It is constructed with partition walls which provide saturated and superheated steam passages in communication respectively with the dry pipe and the steam pipes. These passages are connected with each other by means of the superheater units.

The units are made up of four lengths of 1 7/16-in. or 1½-in. seamless steel tubing connected together so as to form a double loop. The two forward ends of each unit are bent upwards in the smokebox and attached to the power face of the header. They are located in 5⅜-in. or 5½-in. superheater flues situated in the upper part of the boiler, and extend to within 24 inches of the back flue sheet.

The damper is a part of the horizontal plate forming the floor of the enclosure for the header and the part of the units which extend through the front flue sheet. A vertical plate, known as the deflecting plate, extends from the horizontal plate to the top of the smokebox and completes the enclosure for the header and the forward portion of the units. The damper is connected to the damper cylinder piston. The damper cylinder is located on the outside of the smokebox directly connected to the steam pipes or steam chest of the engine by a small copper pipe.

In the operation of the superheater the steam passes from the dry pipe into the saturated passage in the header, then to the units. While passing through the units it traverses a distance equivalent to nearly four times the length of the boiler flues Upon returning to the header it enters the superheated steam passages. It leaves these passages and continues to the cylinders through the steam pipes and steam chests.

The flow of gases through the superheater flues which contain the superheater units, is controlled by the damper. The damper is operated by means of a damper cylinder piston located in the damper cylinder on the outside of the smokebox. The cylinder is in direct communication with the steam pipe or steam chest of the engine. The position of the damper is closed when the engine is not working steam. At the opening of the engine throttle valve steam is admitted to the damper cylinder through the pipe which connects it with the steam pipe or steam chest. The steam admitted to the damper cylinder moves a piston in the cylinder which, through its connection with the damper, opens the damper and permits the hot gases from the firebox to pass through the large flues. As the damper opens the counterweight attached to the damper shaft arm is raised. When the engine throttle is closed, the pressure in the damper cylinder being released, the counterweight falls and closes the damper. Thus the operation of the damper, simultaneous with the opening and closing of the engine throttle, protects the units from overheating when there is no steam passing through them.

This type of superheater varies in size with the boiler to which it is applied, the size being established by the number and length of the units. It can be applied to all types of locomotives equipped with piston valves. In operating it furnishes steam continuously with from 200 to 250 degrees of superheat. The superheated steam temperature with ordinary boiler pressure is from 600 to 650 degrees Fahrenheit.

Superheater Damper. 34, Fig. 423; Fig. 427; 1, Figs. 431-433. A door in the plate forming the floor of the enclosure for the superheater header in the smokebox, and which regulates the flow of gases through the superheater flues.

Superheater Damper Cylinder. 2, Figs. 431-433; 272, Figs. 101-140; 20, Fig. 423; Fig. 427; Fig. 433. A

small cylinder attached to the outside of the smokebox shell containing a piston connected to the superheater damper. The action of steam on the piston causes the damper to open when the cylinders are using steam.

Superheater Damper Cylinder Arm. 25, 26, Fig. 423. A small arm pivoted to the damper cylinder and receiving its motion from the damper cylinder piston which it conveys to the damper through the damper shaft link and arm.

Superheater Damper Cylinder Steam Pipe. A small copper pipe conveying steam from the steam chest or steam pipe to the damper cylinder.

Superheater Damper Shaft. 3, Figs. 431-433; 28, Fig. 423. A shaft resting in bearings in both sides of the smokebox shell and on which the damper turns.

Superheater Damper Shaft Arm. 4, Figs. 431-433; 29, Fig. 423. A lever connected at one end to the superheater damper shaft and having a counterweight at the other end.

Superheater Damper Shaft Bearing. 5 and 6, Figs. 431-433. 21 and 22, Fig. 423. A casting fastened to the smokebox shell and furnishing a bearing for the damper shaft.

Superheater Damper Shaft Counterweight. 7, Figs. 431-433. 30, Fig. 423. A weight secured at one end of the damper shaft arm for the purpose of closing the damper when the throttle valve is closed.

Superheater Flue. See Flue.

Superheater Header. 12, Figs. 431-433; 1, Fig. 423; Fig. 432. A metal manifold with partitions which separate the saturated from the superheated steam, and to which the superheater units are attached. The saturated passages connect to the dry pipe and the superheated steam passages connect to the steam pipes.

Superheater Header Support. 15, Figs. 431-433. A bracket secured to the inside of the smokebox shell to support the superheater header.

Superheater Heating Surface. The combined area in square feet of the superheater units measured on the outside of the pipes and including the return bends. It is not customary to include the area of the superheater header.

Superheater Pipe. 9 and 12, Fig. 423. A length of seamless steel tubing comprising one of the tubes of a superheater unit.

Superheater Pipe Band. 14, Fig. 423. A band of iron around the superheater pipes at short distances along their length to hold the tubes together and prevent warping.

Superheater Pipe Return Bend. A steel casting connecting the ends of the superheater pipes where they form the loops.

Superheater Pipe Support. 13, Fig. 423. Small supports fastened to the superheater units at short distances along their length for the purpose of holding the unit in position in the superheater flue.

Superheater Pyrometer. Figs. 428, 429. The electrical pyrometer or temperature indicator is a device which indicates the actual temperature of the steam in the steam chest. Its purpose is to assist engineers and firemen in obtaining the highest degree of efficiency in the operation of superheater locomotives.

Superheater Unit. Fig. 431; 17, Figs. 431-433; Fig. 425-426. Superheater pipes in combination with the return bends and fittings making the connection between the saturated and superheated steam passages in the header, and located in a superheater flue.

Supply Pipe (Air Compressor). A pipe sometimes connected to the air inlet of an air compressor by means of which the air supply is drawn from a point away from the compressor.

Swash Plate. 31, Figs. 1747-1757. One of several transverse plates secured in a tender tank to prevent any violent surge or rush of water caused by stopping or starting suddenly. British, splash plate.

Swing Bolster. 10, Figs. 1027-1031; 20, Figs. 976-987; Fig. 977. A cross beam or transverse member of a truck carrying the center plate and suspended by bars or links, called swing links, from a transom or crosstie attached to and resting on the truck frame. It is intended to relieve lateral strains due to the weight of the locomotive, and to absorb lateral shocks that would otherwise be transmitted to the locomotive. Called swing bolster to distinguish it from a rigid bolster. Swing bolster trucks for tenders are built with a wood or steel bolster resting on springs which bear at the bottom on a transverse member called a spring plank, which is in turn suspended by swing links from the truck frame, thus furnishing the desired lateral flexibility. See Bolster.

Swing Frame. 4, Figs. 976-987; Fig. 980. A name given to a truck frame from which a swing bolster is suspended by the swing links. See Swing Bolster.

Swing Link. 21, Figs. 976-987; 11, Figs. 1027-1031. One of four short bars or hangers pivoted to a swing bolster and to a transverse member or transom of a truck frame, or to a swing frame, and forming a flexible connection between the truck and the center casting or center plate. Also called swing hanger or swing link hanger.

Swing Link Pin. 21a, Figs. 976-987; 5, Figs. 1032-1033. A pivot or bolt holding the top or bottom end of a swing link on an engine truck with a swing bolster.

Swing Link Pin Key. A small piece of steel through the end of a swing link pin to prevent it from pulling out.

Swing Motion. A term applied to an arrangement of hangers and other supports for the springs and truck bolster which enables a tender frame to swing laterally on the truck.

Swing Motion Spring. A Bolster Spring, which see. A lateral motion spring.

Swing Motion Truck. Figs. 978-985. A truck with a bolster and spring plank suspended on swing hangers so that they can swing laterally to the truck frame. Also called swing bolster truck in distinction from a rigid bolster truck.

Swing Spring Plank. A transverse member underneath the bolster of a four-wheel truck, on which the bolster springs rest. A swing spring plank differs from an ordinary spring plank in being supported by hangers or links. See Spring Plank.

Swing Union. Fig. 1745. A union with a ball joint, and having an elbow on both parts so that it can be used to connect pipes which lie at an angle to each other.

Switch (Air Brake). A single-throw, double-break, indicating, snap switch used to make and break the circuit to the motor-driven air compressor and electric compressor governor.

Switch. See Control System.

Switch Group. See Control System.

Switcher. See Switching Locomotive.

Switching. The act of moving cars from one track to another by means of switches, as in making up or separating trains, and placing the cars on the tracks and in places where they are needed. Also occasionally called drilling or regulating, and in Great Britain shunting or marshaling.

Switching Engine Mileage. The American Railway Master Mechanics' Association in 1872 adopted the following recommendations:

"In the matter of cost of keeping up repairs of engines engaged in switching service exclusively, that an allowance of six miles per hour for the time that such engines are in actual use be allowed:

"That for engines running local freight trains an allowance of six per cent. to the train mileage be added for switching:

"That where engines run empty to exceed one-half mile between where the trains are taken or left and the roundhouse, such mileage should be computed, and that for engines running through freight or passenger trains no computation should be made by switching."

Switching Eye. More commonly Push Pole Corner Iron or Pilot Shoe, which see. A cast iron socket usually attached to the lower corner plate of a tender and at the ends of the front bumpers of a locomotive, to which a push bar or push pole can be attached, to move the car by an engine on an adjoining track. A roping staple or pull iron is sometimes called a switching eye.

Switching Locomotive. Figs. 1, 3-7, 9, 11-14, 16-21, 101-106, 145. A locomotive used for shifting or switching cars in yards and terminals. Sometimes termed switcher. Usually built to carry all its weight on the driving wheels.

T

Table Plate. A flat sheet or plate level with the exhaust nozzle, and extending across the smokebox, one edge connected to the lower end of the diaphragm and the other connected to the netting and diaphragm apron. Used to throw the sparks downward and toward the smokebox front.

Tail Bolt. See Drawbar Bolt.

Tail Lamp or **Tail Light.** Figs. 1708, 1717. A signal lamp attached to the rear end of a train. When used on a locomotive running light they are attached to brackets on the rear corners of the tender tank. They often have two or more lenses of different colors.

Tail Piece. See Back Bumper.

Tank. Figs. 1747-1759. That part of a locomotive tender, or of a tank locomotive, that contains the water. Tender tanks for large modern locomotives hold from 4,000 to 12,000 gallons of water.

Tank Angle. A piece of steel bent at right angles, used to brace or secure any of the plates or sheets of which a tender tank is built.

Tank and Coal Bunker. The coal box and water tank on an extension of the main frames of a tank locomotive. In some designs a water tank is placed on each side of the boiler.

Tank Brace. 18 and 19, Figs. 1747-1757. A steel rod, flat bar or tee or angle riveted to two tank plates to serve as a brace or stiffening piece.

Tank Bracing. The system of rods, bars, tees or angles used to strengthen and secure the various plates composing a tender tank.

Tank Coal Board. A gate or partition composed of several boards or steel plates sliding in vertical ways riveted to the legs of a tender tank for the purpose of holding back the coal or allowing only a little at a time to slide to the most convenient point to be reached by a fireman.

Tank Coal Board Slide. 30, Figs. 1747-1757. A vertical channel or slide formed by steel angle strips riveted to the inner sides of the legs of the tender tank for a sliding gate or rack that keeps the coal in place. See Tank Coal Board.

Tank Coal Bracket. A narrow plate of metal riveted longitudinally to the top of a tender tank to prevent the coal from falling off.

Tank Coal Gate. A door for holding back the coal on a tender and preventing it from spreading over the apron and deck.

Tank Coal Gate Hinge. One of two hinges on which a gate for holding back coal in a tender turns.

Tank Collar. Called also tank wings and tank dashboard. A vertical or slightly inclined strip of metal secured around the sides and back end of the top of a tender tank to prevent coal from spilling off.

Tank Dashboard Bracket. Metal strips or holders riveted to the sides and end of a tender tank to hold the projecting edge or dashboard.

Tank Drain Pipe. 35, Figs. 1747-1757. A piece of pipe open at both ends, screwed into a flange riveted to the tank top near the manhole and passing down through the tank bottom to allow any water spilled on the top plate when filling the tank to run off.

Tank Filling Hole. 266, Figs. 101-140. A large opening closed by a flap or lid in the top of a tank near the back end through which water is poured from a water crane alongside the track to fill the tank. Also called tank manhole or tank funnel.

Tank Filling Hole Lid. 1, Figs. 1747-1757 and 1817. A cover on a tank filling hole or manhole, usually hinged for convenience in opening.

Tank Filling Hole Lid Handle. 2, Figs. 1747-1757 and 1817. A curved piece of metal fastened to a filling hole lid to serve as a handle for raising or lowering it.

Tank Filling Hole Lid Hinge. 3, Figs. 1747-1757 and 1817. A hinge fastened to the edge of a filling hole and to its lid.

Tank Fire Tools Bracket. A bent piece of metal riveted to a side frame or tank collar of a tender to hold the poker, hoe, or any other long-handled tools used in firing.

Tank Funnel. A term used instead of Tank Manhole or Tank Filling Hole.

Tank Goose Neck. 15, Fig. 1818. A curved cast-iron pipe to convey water from the front end of a tender tank to a hose which couples to the injector feed pipe. One goose neck is placed in the bottom of the tank leg on each side of a tender. British, swan neck.

Tank Hand Hold. 7, Figs. 1747-1757. A piece of malleable or wrought iron or steel secured to the ends of a tender tank to assist a man in getting on or off.

Tank Handle Post. A short piece of metal riveted to a tender tank to hold one end of a tank handle.

Tank Hose. A hose between the tender and engine for the purpose of conveying water from the tank to the injector.

Tank Hose Sleeve. A brass collar fitting loosely around the end of a tank goose neck and having lugs on

it for a spanner wrench. It screws on the hose nipple of the suction pipe.

Tank Hose Strainer. Figs. 1799, 1821, 1824. 1825, 1827, 1830, 1832. A large strainer used in the water tank over the end of each suction pipe so as to exclude foreign matter. Also placed in the suction pipes near the tank.

Tank Knee. A right-angled plate used as a brace or stiffening piece in the ends and corners of a tender tank.

Tank Ladder. 34, Figs. 1747-1757; Fig. 1793. A metal ladder fastened to the back end of a tender to give access to the tank top from the back bumper. Also placed inside the tank, at the manhole, and providing a means of entering the tank from the manhole.

Tank Legs. 17, Figs. 1747-1757. The front portions of a tender tank, or those nearest the engine and forming the side of the coal space.

Tank Locomotive. Figs. 4-9, 11-12, 15, 23-25, 30-32. One having a water tank and coal box on the extension of the main frames and operated without the usual tender. Used for contractor's, industrial and suburban service. See Saddle Tank Locomotive, Side Tank Locomotive.

Tank Lug. 25, Figs. 1747-1757. An angle or bracket riveted to the sides or top of a tender tank for securing the collar or dashboard. Also for securing the tank to the underframe floor.

Tank Manhole. 5, Figs. 1747-1757; Fig. 1817. A round or oblong opening in the top of a tender tank near the back end, fitted with a collar to raise it somewhat above the top plate, for filling the tank with water from a crane or stand pipe. Also called tank filling hole and tank funnel.

Tank Oil Heater. A coil of steam pipes in the tender oil tank, to which steam is admitted for the purpose of heating the oil in the tank.

Tank Oil Heater Head. An iron casting forming one end of a tank oil heater and frequently combined with the tank oil valve to form the body of the valve.

Tank Oil Valve. 13, Fig. 261; Fig. 271. A valve in the tender oil tank for controlling the supply of oil to the engine oil heater. Frequently forms a part of the tank oil heater.

Tank Oil Valve Adjusting Screw. A screw arranged to regulate the movement of the tank oil valve.

Tank Oil Valve Handle. A bar or wheel attached to the tank oil valve stem to form a convenient means of operating the valve.

Tank Oil Valve Spring. A spring in the tank oil valve arranged to hold the valve on its seat.

Tank Oil Valve Stem. A rod fastened to the tank oil valve for the purpose of controlling the movement of the valve.

Tank Side Bracket. A right-angled casting riveted to a tender side sill and to the bottom plate of the tank, to secure the tank to the frame.

Tank Step. See Tender Step.

Tank Support. See Tank Brace, Tank Angle.

Tank Swash Plate. See Swash Plate.

Tank Tee. A T-shaped piece of metal used inside a tender tank to strengthen and support the sides or top.

Tank Valve. Figs. 1818, 1820, 1826, 1828; 1, Figs. 1818-1820. A valve placed in the bottom of a tender in the tank leg on each side, operated by a stem and provided with a handle for opening or closing the valve. Its purpose is to admit water to the goose neck and thence to an injector suction pipe.

Tank Valve Cage. An open metal casting surrounding a tank valve and limiting the extent of its travel.

Tank Valve Chamber. 14, Figs. 1818-1820. A cast-iron receptacle in the bottom of a tank leg containing one of the tank valves.

Tank Valve Handle. 8, Figs. 1818-1820; Fig. 1801. A handle on the upper end of the rod that opens and shuts a tank valve.

Tank Valve Rack. A spiral piece surrounding a tank valve rod and provided with notches or steps to engage with a piece attached to the valve rod for holding the rod at any particular point.

Tank Valve Seat. 2, Figs. 1818-1820. A casting with an opening, coned to fit a correspondingly coned piece, which forms the tank valve.

Tank Valve Strainer. Fig. 1806. A perforated brass cylinder covering a tank valve to prevent dirt or any solid particles getting in the feed pipe.

Tank Well. See Tank Valve Chamber.

Tee or T (Pipe Fittings). Figs. 1737-1741. A T-shaped cast iron tube for uniting one pipe at right angles to two others in the same line. The pipes are screwed into the arms of the T. A reducing tee has the arms of different diameters.

Tee Head. 213, Figs. 101-140; 10, Figs. 317-319, 361-407. A T-shaped pipe attached to the front tube sheet in the smokebox and forming the connection between the dry pipe in the boiler and the steam pipes in the smokebox. Also called steam head, nigger head and branch pipe, and in Great Britain, steam pipe tee piece. On locomotives equipped with fire tube superheaters the tee head is designed to form the superheater header.

Ten-Wheel Locomotive (4-6-0). Figs. 2, 124. Specifically a locomotive having ten wheels, but commonly applied only to locomotives having a four-wheel front truck and three pairs of coupled driving wheels, but no trailing truck. Used in fast freight and passenger service.

Ten-Wheel Switcher (0-10-0). Figs. 1, 19-20, 58-61, 105. A locomotive having five pairs of coupled driving wheels, but no front or trailing truck; used for heavy switching service.

Tender. Figs. 1747-1851. A car for carrying the water and fuel for a locomotive. It consists of the usual trucks and underframe, upon which is carried the tanks for fuel and water. It is coupled to the locomotive and is a part of it while the locomotive is in service. See Locomotives, Inspection and Testing.

Tender Axle. (A. R. M. M. A. Standard.) A shaft made of wrought iron or steel to which a pair of wheels is attached. The wheels are both rigidly fastened to the axle by making a hydraulic press fit. See Axle.

Tender Back Bumper. 4, Figs. 1762-1766. A transverse timber or steel shape forming an end sill at the back of a tender frame. See Bumper.

Tender Bolster. See Bolster and Body Bolster.

Tender Brake (Air Brake). The tender brake gear does not differ essentially from that used under cars, except that the plain triple valve is used on freight and switch engines instead of the quick-action triple valve.

Tender Buffer. See Buffer.

Tender Bumper. 4, Figs. 1762-1766. A transverse piece forming the end sill at either end of a tender. Usually of cast steel in one piece or built up of shapes and angles.

Tender Bumper Push Pole Pocket. 18, Figs. 1762-1766. A cup-shaped casting fastened to the corners of a tender rear end sill by bolts or rivets to receive the end of a push pole. Also called a pushing shoe.

Tender Center Plate. 8, Figs. 1762-1766. A circular grooved plate or bearing attached to the under side of a tender body bolster and fitting into a corresponding plate on the truck bolster.

Tender Chafing Plate. 19, Figs. 1762-1766; Fig. 1790. A metal plate or block fastened to the front end of the tender frame, where it comes in contact with a similar plate fastened to the tail piece of the engine frame.

Tender Crosstie. 34, Figs. 1762-1766. A transverse beam to stiffen a tender frame.

Tender Deck. The floor at the front end of a tender between the legs.

Tender Draft Gear. Figs. 1852-1903. The arrangement of coupler, spring, drawbar, etc., applied to either end of a tender.

Tender Drain Cup (Air Brake). A device located in the brake pipe on tenders, containing a chamber in which is an air strainer and from which the branch pipe leads to the triple valve. A drain cock is provided in the bottom of the chamber for removing any water that may collect in it.

Tender Drawhead. 21, Figs. 1762-1766. A heavy casting secured to the center sills at the forward end of a tender frame to hold the drawbar that couples the engine and tender.

Tender Drawhead Bolt. A bolt used to secure a drawhead to the frame and sills of a tender.

Tender End Sill. 4, Figs. 1762-1766; Figs. 1766, 1779, 1780. A steel or wooden beam forming the transverse member of a tender frame at the end. Known as the back or front end sill, according to its location. See Tender Back Bumper.

Tender Frame. Figs. 1760-1782. A horizontal skeleton or foundation built of wood or steel to support and carry the tank, and having two transverse bolsters with center plates that rest upon the truck center plates. Wood is now seldom used for tender frames, having been superseded by steel in the form of I beams or channel sections. The parts of a tender frame are the side, center and intermediate longitudinal sills, the transverse end sills, the bolsters and crossties and diagonal braces. See Rule 52, Locomotives, Inspection and Testing.

Tender Frame Back Bumper Brace. One of two flat or channeled steel struts or pieces riveted to the back bumper and to the body bolster to strengthen the bumper and distribute the shocks received by it to other parts of the frame.

Tender Frame Crosstie. 34, Figs. 1762-1766. A transverse tie bar holding the longitudinal sills of a tender frame together.

Tender Frame Diagonal Brace. 6, Figs. 1762-1766. One of several wrought iron or steel bars, flat or of angle section riveted diagonally across a tender frame to stiffen it.

Tender Frame Knee. A casting, or forging, its arms at right angles, fastened to the corners of a tender frame inside the sills to hold the frame square.

Tender Frame Spring Cap. A piece of metal fastened on the top of a semi-elliptic spring used with a certain type of tender truck, in which the ends of the spring rest on the axle boxes and the center bears against a cup or pocket secured to the tender frame. See Tender Frame Spring Pocket.

Tender Frame Spring Pocket. A piece of metal fastened to the under side of a tender frame to form a bearing for a semi-elliptic spring mounted longitudinally on the tender truck frame.

Tender Frame Truss Rod. A long bar or metal piece used to truss a wooden tender frame.

Tender Floor Plate. A sheet of steel fastened to a tender frame and forming the bottom of the tank and coal bin.

Tender Hose Thimble. A short brass tube fastened to the lower end of the injector feed pipe and provided with a sleeve nut or fitting for attachment to the fitting on the supply hose.

Tender Roof. A covering or roof built over the forward end of a tender to shelter the fireman on locomotives having very wide or Wootten fireboxes. These locomotives also have a short cab on the back head of the boiler overlapping the tender roof.

Tender Shovel Plate. 37, Figs. 1747-1757. A sheet or piece of metal secured to the floor of the coal bin to provide a wearing surface on which the shovel is constantly scraped.

Tender Side Sill. 1, Figs. 1762-1766. A steel or wooden beam, one of the outside longitudinal members of a tender frame.

Tender Sill Step. See Safety Appliance Standards.

Tender Step. 9 and 10, Figs. 1762-1766; Figs. 1788, 1789. A foot piece for ascending to or descending from a tender. Made of cast or wrought iron or cast steel. Steps are secured at each end of both front and back bumpers of a tender. See Safety Appliance Standards.

Tender Step Hanger. A piece of metal fastened to a tender frame by bolts on rivets and having its lower end bent at right angles for the purpose of holding a step to which it is riveted.

Tender Step Hanger Brace. A piece of metal fastened to a tender frame and to a step hanger, to strengthen the step and hold it rigidly in place.

Tender Tool Box. A receptacle on a tender for holding small tools and supplies. Usually placed on top of the tank leg.

Tender Truck. Figs. 1904-1929. Two four-wheel trucks are used on each tender. See Truck, Diamond Truck, Pedestal Truck and Swing Motion Truck. See Rule 55, Locomotives, Inspection and Testing.

Tender Water Scoop. See Water Scoop.

Tender Wheel. See Wheel.

Tension Bar. Any bar subjected to a tensile strain. The upper member of an iron body bolster is called the tension bar.

Tension Member (of a Frame, Truss, Beam or Girder).

Test Plate. See Boiler Test Plate.

Truss rods, brake rods, etc., are tension members, in distinction from compression members, which resist crushing or compression stresses.

Thimble. A bushing.

A sleeve or tube through which a bolt passes, and which may act as a distance piece. A thimble is

usually round, but sometimes square. See CROWN BAR THIMBLE.

Third Rail (Electric Locomotive). A soft steel rail conductor, supported on insulators near and parallel to one of the track rails for the purpose of supplying electrical energy to a locomotive or motor car. It is sometimes installed so that the collecting shoe on the motor car or locomotive slides along its top surface and sometimes so that the shoe is pressed against the lower edge. In the one case it is called an over-running and in the other an under-running third-rail. The rails for this purpose are not made so hard as track rails, as the wear on them is much less, but the chief object sought in their manufacture is a combination of high electrical conductivity with good wearing qualities.

Third-Rail Shoe (Electric Locomotive). Figs. 2156, 2193. A metallic sliding contact, of cast iron or cast steel, mounted on the truck of a motor car or on the frame of an electric locomotive, and insulated therefrom, for collecting current from an insulated third-rail located alongside the running rails. Positive contact between shoe and rail is maintained by gravity, a stiff spring or by pneumatic pressure. Four shoes are commonly used for a double truck car or locomotive.

Third-Rail Shoe Beam. 37, Fig. 2127. A wooden beam attached to the journal bores or equalizers of an electric truck and serving as a means of supporting the third-rail shoe.

Third-Rail Shoe Beam End Bracket. 36, Fig. 2127. A support bolted to the truck equalizers or engine frames to support the THIRD RAIL SHOE BEAM.

Third-Rail Shoe Beam Tie Bar. A cross connection, usually in the form of an I beam, extending across the end of an electric truck from one side to the other and serving to connect and brace the third-rail shoe beams.

Third-Rail Shoe Spring (Electric Locomotive). One of two spiral springs used to hold a third-rail shoe in position. Its tension is sufficient to hold the shoe firmly against either the upper or lower edge of a third-rail.

Three-way Cock. A metal faucet or valve used to connect an indicator with either end of a locomotive cylinder. The handle has three position, one for admitting steam from each end of the cylinder and a cut-off position.

Throat (Car Wheel). The interior angle of a flange where it joins the tread of the wheel. See FLANGE. The part of a locomotive boiler where the firebox joins the cylindrical portion of the shell.

Throat Brace. 34, Figs. 152-186. A bar or rod fastened to the back tube sheet and to the shell of a boiler to brace the tube sheet below the bottom row of tubes, at the throat of the firebox.

Throat Brace Eyebolt. An eye formed on a throat brace where it is connected to the shell of a boiler by means of a pin or rivet.

Throat Brace Pin. See THROAT BRACE EYEBOLT.

Throat Sheet. 15. Figs. 101-140; 30, Figs. 152-186. A boiler plate flanged to a shape suitable to connect the cylindrical portion of the boiler with the firebox side sheets. In some designs the throat sheet is made to extend entirely around the boiler, connecting the cylindrical shell with the firebox side sheets and roof sheet.

Throttle. Figs. 188-302. The whole arrangement of valve, operating lever, reach rod, etc., by which the engineman controls the amount of steam admitted to the cylinders. See Rule 56, LOCOMOTIVES, INSPECTION and TESTING.

Throttle Arm. See THROTTLE LEVER.

Throttle Base. See THROTTLE VALVE CASE.

Throttle Bell Crank. See THROTTLE CRANK.

Throttle Box or **Throttle Chamber.** See THROTTLE VALVE CASE.

Throttle Crank. 99, Figs. 101-140; 4, Fig. 288. A cast iron or steel piece part like a right angle, pivoted to a bracket cast on the throttle pipe and having one end connected to the stem of the throttle valve and the other to the throtle rod. It transfers the horizontal motion of the throttle rod to the throttle stem, which is in a vertical position, when the throttle valve is opened or closed.

Throttle Crank Bracket. A lug or projection cast on the side of a throttle pipe to form a bearing or support for the pivot or pin of the throttle crank.

Throttle Crank Pin. A bolt or pivot secured to a throttle crank bracket to hold the throttle crank.

Throttle Lever. 183, Figs. 101-140; Figs. 1156-1164; Fig. 301; 3, Figs. 1156-1161. An arm or bar for operating the throttle valve. It is pivoted to a link or bracket on the boiler head, and connected to the throttle rod which passes through a stuffing box and is connected to the throttle crank. A latch engages in teeth on a quadrant, which locks the throttle lever in any desired position.

Throttle Lever Fulcrum. See THROTTLE LEVER LINK.

Throttle Lever Handle. The outer end of a throttle lever which is grasped by the hand in order to move the lever.

Throttle Lever Intermediate Lever. An additional arm or bar to connect the throttle lever with the throttle rod on locomotives where the design does not permit the throttle lever to be placed on the boiler back head.

Throttle Lever Latch. 7, Figs. 1156-1161. A small piece of metal connected to the throttle lever and engaging with the lever quadrant, thus locking the throttle lever in any desired position.

Throttle Lever Latch Handle. 5, Figs. 1156-1161. A small handle connected to the throttle lever latch and which the engineman grasps simultaneously with the throttle lever handle.

Throttle Lever Latch Link or Connection. 4, Figs. 1156-1161. A metal rod connecting the latch with the latch handle of a throttle lever.

Throttle Lever Latch Spring. 6, Figs. 1156-1161. A small spring on the throttle lever, which holds the latch in mesh with the quadrant teeth

Throttle Lever Link. 8, Figs. 1156-1161; Fig. 1157. A short piece of metal secured at one end to a stud set in the boiler back head, and at the other holding a steel pin on which the throttle lever is pivoted.

Throttle Lever Nut. A square or hexagonal block of metal, threaded on the inside and screwed on the end of a bolt or pin which secures the throttle lever to the throttle rod.

Throttle Lever Quadrant. 1, Figs. 1156-1161; Fig. 1159. A plate of brass or steel, secured to the boiler back head, and having one edge curved to the arc of a circle and with notches cut in it to engage with the lever latch and thus hold the lever in any position. On

some designs the quadrant forms a part of the throttle rod or stem and is not secured to the back head.

Throttle Lever Stud. A short rod tapped into the boiler back head and having a jaw or yoke at its outer end to secure the link connected to the throttle lever.

Throttle Lever Support. A metal standard attached to the boiler to hold a short shaft fastened to the throttle lever. Used where the lever is not located on the back head of the boiler.

Throttle Pipe. 95, Figs. 101-140. A vertical cast-iron or steel pipe fitting into the dry pipe elbow at its lower end and secured inside the dome of a locomotive boiler to convey steam from the throttle valve to the dry pipe. A ball joint is generally made at the connection with the dry pipe. Also called throttle stand pipe. In many designs the throttle stand pipe and throttle valve casing are cast in one piece.

Throttle Pipe Ring. A sleeve or short piece of pipe having its edge ground to a spherical surface and secured on the end of a dry pipe to fit into a corresponding surface on the end of the dry pipe elbow.

Throttle Pipe Saddle. See Throttle Pipe U Bolt.

Throttle Pipe U Bolt. 5, Fig. 288. A bolt bent so as to pass around the outside of a dry pipe elbow and fasten to the throttle stand pipe in order to make a tight joint.

Throttle Rod. 2, Figs. 1156-1161. A metal rod fitted steam tight through a stuffing box on the boiler back head and connecting the throttle lever with the throttle crank. Also called throttle stem and throttle reach rod.

Throttle Rod Jaw. A U-shaped or bifurcated piece of metal, either screwed or keyed on to the outer and of a throttle rod so as to connect it to the throttle lever by means of a pin or bolt passing through the forked end. In some designs the jaw and throttle lever quadrant are made in one piece.

Throttle Rod Packing. See Packing.

Throttle Rod Socket. A short piece of metal, hollow at one end and formed into a fork at the other. The hollow end is screwed on and then keyed to the outer end of the throttle rod, while the forked end is connected to the throttle lever by a pin

Throttle Stand Pipe. See Throttle Pipe.

Throttle Stem. See Throttle Rod.

Throttle Stuffing Box. Fig. 1165. A cast-iron tube or sleeve with a wide flange fastened to the boiler back head by studs tapped in. The throttle rod passes through this, and a gland on the box holds the packing in place and prevents the escape of steam while allowing the rod to be moved back and forth.

Throttle Stuffing Box Gland. A short cylinder or tube with a wide flange holding the packing in place around the throttle rod, and secured to the stuffing box by nuts screwed on the ends of projecting studs.

Throttle Stuffing Box Ring. A metal ring inside a throttle stuffing box to hold the throttle rod packing in place.

Throttle Valve. 97, Figs. 101-140; Figs. 288-302; 1, Fig. 288. An arrangement or device for admitting steam from the boiler to the dry pipe and thence to the cylinders and by which the engine can be started and stopped. It is usually placed in the upper part of the steam dome, in order to secure dry steam, and consists of two disks of cast iron united by a central body or web. These fit into two circular openings in the upper part of the throttle pipe. The upper disk is slightly larger than the lower, and in consequence the unbalanced steam pressure on the disks tends to keep the valve closed. The disks have conical edges, and when the valve is closed they rest upon correspondingly coned circular seats, to which they are ground in with emery. There has been developed an external throttle valve which performs the same duties as the usual design, but it is placed outside of the steam dome. Usually located underneath the boiler just back of the cylinder saddle, thus making it easy of access.

Throttle Valve Case. 96, Figs. 101-140; 3, Fig. 288; Fig. 299. A casting forming a chamber for the throttle valve, and in which the valve seats are made. It is usually bolted to the top of the throttle valve stand pipe, but in some designs the two pieces are made in one casting.

Throttle Valve Case Extension. 9, Fig. 297. A casting forming a hood over the top of the throttle valve case. Used to prevent water being drawn into the throttle valve.

Throttle Valve Dome. See Auxiliary Dome.

Throttle Valve Separator Casting. 8, Fig. 297. A casting secured to the top of the throttle valve and forming a seat against the case extension, in the form of a deflecting plate to prevent water being drawn through the throttle valve.

Throttle Valve Stem. 98, Figs. 101-140; 2, Fig. 288. A steel rod or shaft secured to one arm of the throttle crank by a bolt or pin, or by a key, and carrying the valve at its upper end. The valve rests upon a flange or collar forged on the stem, and is held fast to it by a nut screwed on to the upper end of the stem and binding down on the valve. The motion of the throttle crank is thus imparted to the throttle valve through the valve stem.

Throttle Valve Stem Jaw. A fork or bifurcation on the lower end of a throttle stem for the attachment of one arm of the throttle crank by means of a pin or bolt.

Throttle Valve Stem Key. A thin, tapered piece of steel used to secure a throttle valve to the valve stem. See Throttle Valve and Throttle Valve Stem.

Tie. "A beam or rod which secures parts together and is subjected to a tensile strain. It is the opposite of a strut or straining piece, which acts to keep objects apart, and is subject to compressing force."—Knight.

Tie Rod. An iron or steel rod which acts as a tie.

Tire. 5, Figs. 897-907; Fig. 903. A heavy band of steel forming the periphery of a wheel to impart strength and to resist wear. Many devices for fastening a tire to a wheel center have been devised. Locomotive driving wheels are always equipped with steel tires, but for trucks, especially under tenders, chilled cast-iron wheels, cast steel wheels, forged steel wheels, solid rolled steel wheels, are extensively used, as well as steel-tired wheels. See Wheels; also Driving Wheel Centers and Sizes of Tires. See Driving Wheel Tires and Trailing Wheel Tires.

Tire Bolt. A screw bolt for holding a tire on a wheel center. When retaining rings are used the bolts pass through the rings and hold them and the center and tire together.

Tire Fastening. Figs. 2027-2042 show the principal methods. See Key Ring Tire Fastening, Retaining Ring, Mansell Retaining Ring.

Tire Sections. (A. R. M. M. A. Standards.) Fig. 2268. At the convention of 1893 a form of tire was adopted. Modified in 1908.

In 1912 a further revision was made by eliminating the five different widths of flanged tires, allowing but one width, viz.: 5½ inches. Also in the case of plain tires, two sizes were eliminated, thus keeping three sizes, viz.: 6 inches, 6½ inches and 7 inches.

In 1912 a condensing limit of thickness of flange of 15/16 in. was adopted as standard

Tire Shrinkage. See illustration. The allowance that is made in the difference in the diameters of the inside of a steel tire and the outside of the center upon which it is to be placed. The tire diameter is the smaller and after being heated and placed in position it is allowed to cool and shrink on the center.

In 1907 the American Railway Master Mechanics' Association adopted the following shrinkage allowances as standard:

For cast iron and cast steel centers less than 66 inches diameter, 1/80 inch per foot of diameter.

For cast iron and cast steel centers 66 inches and over in diameter, 1/60 inch per foot of diameter.

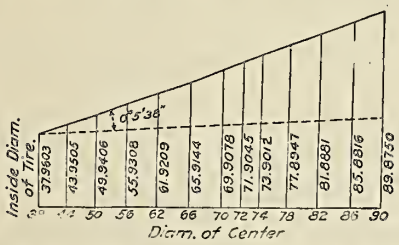

In 1908 the dimensions shown in the diagram were adopted as standard, allowing 1/80 inch per foot in diameter for 38-inch centers and 1/60 inch per foot for 90-inch centers.

Tires, Minimum Thickness of Steel. (A. R. M. M. A. Standard). Fig. 2280. The thickness to which the steel tires of wheels are allowed to be worn. For tender wheels it is 1 inch, to be measured normal to the tread and radial to the curved portions of the flange through the thinnest part within 4¼ inches from the back of the flange; the thickness from the latter point to the outer edge of tread to be not less than ½ inch at thinnest part. A further practice has been adopted of cutting a small groove in the outer face of all tires when wheels are new, at a radius of ¼ inch less than that of the tread of tire when worn to the prescribed limit to facilitate inspection.

Tongs. A hinged metal tool for grasping an object; forms part of the tool outfit on a locomotive.

Tools, Machine. Figs. 2351-2565.

Tools, Locomotive Equipment. Figs. 2289-2350.

Tool Box. A case or cupboard for holding the tools and supplies carried on a locomotive. Commonly located on the tender.

Torch. Figs. 2302-2322. A portable illuminating device commonly made of brass or malleable iron and containing a reservoir for oil into which a wick extends. Used for inspecting and oiling a locomotive at night, or when examining dark, inaccessible places underneath the engine or tender.

Torpedo. A cylindrical detonating cap provided with clips for folding under the head of the rail for the purpose of making a loud alarm as a signal when locomotives pass over them. The basis of the detonating compound is fulminate of mercury. The interior pieces of iron, to insure the explosion of the fulminate, are termed anvils.

Track. A rail or bar which forms a path on which anything, as a locomotive or door, runs.

Traction Increaser. An arrangement for transferring a portion of the weight of a locomotive from the leading or trailing truck to the driving wheels in order to increase the tractive effort in starting. It consists of a cylinder supplied with compressed air and containing a piston and piston rod which operates a set of levers and shifts the fulcrum of the equalizing beam that connects the driving and trailing truck springs on 4-4-2 type engines. Locomotives of the 2-6-2 type have the piston rod of one traction increaser cylinder applied to the equalizer that connects the forward truck with the front transverse equalizer, and that of the other applied to the trailing truck as stated above. The device is operated from the cab, and in some designs the air valve is so connected with the reverse lever that it is closed and the normal distribution of weight on the driving wheels restored as soon as the reverse lever is moved back to a certain point; say when giving a cut-off in the cylinders of about 60 per cent. of the stroke.

Tractive Effort. The effort exerted by a locomotive in turning its wheels by the action of the steam against the pistons, which, through the media of the crossheads, rods, etc., causes them to revolve and the locomotive to move along the rails.

At starting speeds a locomotive will usually develop, at the rim of the driving wheels, the rated tractive effort, which is calculated from the dimensions of the engine.

The formula for simple engines is

$$T = \frac{0.85\,P \times C^2 \times S}{D}$$

where T = tractive effort in pounds,
P = boiler pressure in pounds per square inch,
C = diameter of cylinders in inches,
S = stroke of piston in inches,
D = diameter of driving wheels in inches.

The formula for Vauclain, Balanced, and Tandem Compound engines is

$$T = \frac{S \times P}{D}\,(2/3\,C^2 + \tfrac{1}{4}\,c^2).$$

where T = tractive effort in pounds,
C = diameter of high pressure cylinders in ins.,
c = diameter of low pressure cylinders in ins.,
S = stroke of piston in inches.
P = boiler pressure in pounds per square inch,
D = diameter of driving wheels in inches.

The formula for Two Cylinder or Cross Compound engine is

$$T = \frac{C^2 \times S \times 0.6\,P}{D}$$

where T = tractive effort in pounds,
C = diameter of high pressure cylinder in ins.,
S = strofle of piston in inches,
P = boiler pressure in pounds per square inch,
D = diameter of driving wheels in inches.

The formula for Mallet Compound engines is the result of the above formula multiplied by two, as the Mallet type has four cylinders and is

$$T = \frac{C^2 \times S \times 1.2\,P}{D}$$

The formulas for Two Cylinder and Mallet compound engines assume a cylinder ratio of approximately 2.35 to 2.40.

Tractive Force. See TRACTIVE EFFORT.

Tractive Power. See TRACTIVE EFFORT.

Trailing Axle. Figs. 1044, 1046-1048, 1050; 2, Figs. 1014-1020. The axle of a trailing truck.

Trailing Truck. Figs. 1011-1034. Usually a two-wheel TRUCK, which see, under the firebox of a locomotive, back of the driving wheels and carrying part of the weight of the engine. They are commonly designed to have some side motion. See RADIAL TRUCK. See Rule 43, LOCOMOTIVE, INSPECTION and TESTING.

Trailing Truck Box. 116, Figs. 101-140; 3 and 25, Figs. 1014-1020; 12, Figs. 1027-1031. A box-shaped casting of iron or steel, fitted to slide vertically in the jaws, legs or pedestals of the trailing truck, and holding a brass or bearing resting on the trailing axle journal. See JOURNAL BOX.

Trailing Truck Box Guide. 11, Figs. 504-508. Castings fitted to the sides of the trailing truck pedestal on a locomotive frame for the purpose of guiding the truck box and furnishing a wearing surface.

Trailing Truck Box Shoe. A strip of metal having parallel sides secured on the inside face of one of the pedestals of a trailing truck to form a wearing surface for the box which slides vertically in the jaw between the pedestals.

Trailing Truck Centering Device. Fig. 1016. An arrangement of springs for restoring the truck to its central position when it has been displaced on a curve. See ADJUSTING SPRING.

Trailing Truck Pedestal. See PEDESTAL.

Trailing Truck Pedestal Tie Bolt. A heavy piece or rod of metal having a head on one end and a thread cut on the other, passing through the lower ends of the trailing truck pedestals and through the pedestal thimble or cap. Also called a pedestal tie or pedestal binder, as its function is to secure and strengthen the jaws of a trailing truck.

Trailing Truck Pedestal Wedge. A wedge-shaped strip of metal secured on the inside face of one of the pedestals of a trailing truck to form a wearing surface for the box. The lower end of the wedge rests upon the end of a set screw, by turning which the wedge can be adjusted to any degree necessary to take up the wear or lost motion of the box.

Trailing Truck Spring Saddle. A bent piece of metal secured to the band of a trailing truck spring and resting on the top of the axle box.

Trailing Truck Spring Seat. 27, Figs. 1014-1020; Fig. 1013. That part of a spring saddle on which a trailing truck spring rests, and through which a portion of the weight of the locomotive is transmitted to a trailing axle box. The spring seat is also placed over the journal box on some designs.

Trailing Wheel. 115, Figs. 101-140; 1, Figs. 1014-1020. The wheels of a trailing truck. Usually steel-tired and of larger diameter than the forward truck wheels. See WHEEL. See Rule 47, LOCOMOTIVES, INSPECTION and TESTING.

Trailing Wheel Tires. See Rule 50, LOCOMOTIVES, INSPECTION and TESTING.

Train Air Signal Apparatus. 1408, Figs. 1480-1484. A substitute for the bell cord arranged to give train signals by compressed air. A separate line of signal pipe, similar to the brake pipe, extends throughout the train, connected between the cars by hose and couplings. A car discharge valve, connected to this signal pipe is located in each car and attached to the bell cord in such manner that pulling on the cord releases air from the signal pipe. In the cab on the engine or motor car is a signal valve, which is also connected with the main signal pipe and a small signal whistle. The supply of air is received from the main reservoir through a reducing valve, which maintains a pressure of about 45 pounds per square inch in the signal apparatus. When the car discharge valve is opened by pulling on the cord and the air pressure in the signal pipe is reduced the diaphragm in the signal valve is operated so as to blow the whistle. Signals can be given in this way with rapidity and great certainty. If the train breaks in two, the whistle is blown loudly for a considerable time.

Train Air Signal Instruction. See AIR BRAKE AND TRAIN AIR SIGNAL INSTRUCTION.

Train Air Signal Stop Cock. A stop cock in the air signal pipe. There is one at each end of a car and the back end of the tender.

Train Brake Pipe. See BRAKE PIPE.

Train Line Junction Box. Fig. 2222. See CONTROL SYSTEM.

Train Line Receptacle and Jumper. Fig. 2219. See CONTROL SYSTEM.

Train Pipe (Air Brake). See BRAKE PIPE. The later and preferable name is brake pipe.

Train Signal Pipe. See SIGNAL PIPE.

Transformer (Electricity). A device used with alternating currents for transforming a quantity of energy from one pressure or voltage to another, either higher or lower. It consists of a primary coil supplied with current from some source or generator, a secondary coil, in which the energy is utilized, and an iron core that connects the two coils magnetically. The periodical alternating induction caused by the current in the primary coil induces an electromotive force in the secondary coil; and the primary and secondary electromotive forces are directly proportional to the relative number of turns on the two coils, thus providing means of either raising or lowering the voltage. Electric locomotives built to operate with alternating current have a transformer whose primary coil receives current from the trolley wire at about 11,000 volts, and this is transformed to about 650 volts in the secondary coil from which the motors are supplied.

Transmission Bar. 61, Figs. 101-140; 18, Figs. 648-761; Fig. 707. A curved piece, usually made of cast steel, having one end connected to the link block pin and the other end to a pin on the rocker arm. It is used on locomotives having the eccentrics on the second or third driving axle, where eccentric rods long enough to reach the rocker and curved so as to pass above and below a driving axle would be objectionable. Also called extension bar.

(Walschaert Valve Gear.) The radius bar or radius rod that connects the link block with the valve rod is sometimes called a transmission bar.

Transmission Bar Hanger. 62, Figs. 101-140; 19, Figs. 648-761. A link or arm pivoted at one end to a bracket bolted to the frame and at the other end to the transmission bar in order to support it.

Transmission Bar Hanger Bearing. The sleeve or brass

set in a transmission bar hanger in which the hanger pin or pivot turns.

Transmission Bar Hanger Bracket. 25, Figs. 648-761. A cast iron holder or support, bolted to a locomotive frame and having a brass or bearing for the hanger pin.

Transmission Bar Hanger Pin. 34-35, Figs. 648-761; Fig. 759. A steel pivot set in a bearing in the transmission bar hanger bracket and from which the hanger is suspended. Also applied to the pivot connecting the hanger with the transmission bar itself.

Transmission Bar Link. See TRANSMISSION BAR HANGER.

Transmission Bar Oil Cup. A receptacle for oil secured to a transmission bar for lubricating the pins.

Transmission Bar Pin. A steel pivot at that end of a transmission bar which is connected to the link block. It is a LINK BLOCK PIN.

Transom. Primarily a cross piece.

(Carpentry.) A horizontal piece framed across a door or double light window. The term is also applied in the general sense of a cross piece in other ways.

(Trucks.) 2, Figs. 1027-1031; 13, Figs. 997-1000. Fig. 1004. The cross braces in the center of a truck frame between which the bolster is mounted.

Transom or Bolster Chafing Plate. A plate attached to the side of a transom to protect it from abrasion by the movement of the bolster.

Transom Tie Bar. A wrought iron bar bolted to a pair of transoms to hold them together.

Transverse Equalizer. 14, Figs. 976-987; 209, Figs. 101-140; 19, Figs. 933-960; Fig. 954. An EQUALIZER, connecting the spring suspensions on the two sides of a locomotive.

Tread (of a Step). The part on which the foot is placed.

(Of a Car Wheel). The exterior cylindrical surface of a car wheel inside of the flange which comes in contact with the rail. The usual width is about 4 inches, measured from the throat or inside of the flange to outside of wheel.

Triple Valve (Air Brake). Figs. 1441-1443, 1512, 1513, 1540. A valve device consisting of a body or case, called the triple valve body, which has connections to the brake pipe, the auxiliary reservoir and the brake cylinder, in which a slide valve is operated by a piston, so that when the pressure of the air in the brake pipe is increased the auxiliary reservoir is charged and the air in the brake cylinder is released to the atmosphere; and so that, when the air pressure in the brake pipe is reduced, air from the auxiliary reservoir is discharged into the brake cylinder for applying the brakes. A triple valve performing only these functions is now known as the plain triple valve. Figs. 1443, 1540.

The quick-action triple valve has all the features and performs all the functions of the plain triple valve, and has the additional function of causing a discharge of air from the brake pipe to the brake cylinder, when, in emergencies, the maximum force of the brake is instantly required. Fig. 1441.

The quick-service triple valve is one having the features of discharging a small quantity of air from the brake pipe to the brake cylinder during service applications similar to that occurring in emergency, but in lesser degree and without any danger of causing undesired quick action or of interfering with the sensitiveness of the triple valve. This feature has the effect of (1) materially hastening the service application throughout the train by helping to reduce the brake pipe pressure at each triple valve; (2) increasing the brake cylinder pressure above that resulting from the ordinary flow of air from the auxiliary reservoir; (3) a higher brake cylinder pressure for a given brake pipe reduction. See "PIPELESS TRIPLE VALVES."

The retarded-release feature of certain triple valves is one which makes the time of releasing the air pressure from the brake cylinder to depend on the position of the car in the train, holding back the release on the forward end until those in the rear have an opportunity to release, thus causing the brakes to release uniformly throughout long trains. It is generaly applied to triple valves for freight service. This feature is usually accompanied by the retarded-release feature which holds back the recharging of the auxiliary reservoirs on the forward end of the train in the same manner and degree as the release is retarded.

The graduated release triple valves are so designed as to permit the brakes to be released in steps or graduations by increasing the brake pipe pressure in corresponding steps. This is accomplished by means of a "supplementary" reservoir, which is similar to the auxiliary reservoir, but so connected to the triple valve that it changes to brake pipe pressure during release, remains at that pressure during a brake application, and is connected to that auxiliary reservoir again in release in such a way as to cause the brake cylinder exhaust to be cut off whenever the auxiliary reservoir pressure exceeds that in the brake pipe. In this way a partial increase in brake pipe pressure causes only a partial decrease in brake cylinder pressure, and these graduations of the release may be continued until the brake pipe pressure is almost entirely reinstated. In electric railway service a "control pipe," which connects the main reservoir throughout the train, is connected to the triple valve in place of the supplementary reservoir.

(Operation and Maintenance.) See AIR BRAKE and TRAIN AIR SIGNAL INSTRUCTIONS.

Triple Valve Branch Pipe (Air Brake). A short pipe by which the triple valve is connected with the brake pipe.

Triple Valve Gasket. A gasket placed in the joint between the triple valve and the brake cylinder.

Triple Valve Nipple. The short pipe nipple by which the plain triple valve is connected with the auxiliary reservoir.

Triplex Compound Locomotive. See MALLET ARTICULATED (TRIPLEX) COMPOUND LOCOMOTIVE.

Trolley (Electric Locomotive). A small wheel, or a carriage with journal, bearings, case, etc., usually attached to the end of a trolley pole, the latter being attached, pivoted and swiveled to the top of a motor car or locomotive, and so stayed by springs that it tends to stand in a vertical position. This tendency of the trolley pole to stand erect keeps the trolley wheel in contact (on the under side) of an electric conductor stretched above the car over the center of the tracks. A grooved shoe is often used instead of a trolley wheel to make contact with the overhead wire. A pantagraph trolley frame consists of a number of arms connected so that the shoe carried on top may be raised or lowered from the trolley wire by an air cylinder. See PANTAGRAPH.

Trolley Air Cylinder. A cylinder actuated by compressed

air, having its piston rod connected to the trolley frame or trolley shoe so that by admitting air to the cylinder, the trolley shoe may be pushed up in contact with the overhead wire.

Trolley Frame. See TROLLEY.

Trolley Pole. The pivoted pole carrying a trolley wheel or trolley shoe. See TROLLEY.

Trolley Shoe (Electric Locomotive). A sliding metallic contact piece for collecting current from an overhead wire. Used instead of a trolley wheel. See CONTACT SHOE.

Trolley Wheel. A small grooved wheel mounted in bearings at the end of a trolley pole and running on the underside of the overhead conductor or wire for collecting current to supply the motors of an electric locomotive.

Truck. A rectangular metal frame holding journal boxes, and having a transverse piece called a truck bolster that may carry a center plate or center pin guide, or an arrangement of pivots and springs to allow a slight radial action of the axles. Ordinarily, the term refers to the leading truck of a locomotive with either two or four wheels. The term is also applied to the frame that carries the radial trailing axle as well as to the tender trucks. In any case it is a swiveling frame having boxes or bearings for wheels that are merely carriers of a portion of the weight of a locomotive, as distinguished from driving wheels. In Great Britain it is called a bogie. Engine trucks are shown in Figs. 976-1034, and tender trucks in Figs. 1904-1929. See DIAMOND TRUCK, PEDESTAL TRUCK, PONY TRUCK, RADIAL TRUCK, TENDER TRUCK, TRAILING TRUCK. See Rule 43, LOCOMOTIVES, INSPECTION and TESTING.

Truck Arch Bar. 1 and 2, Figs. 1913-1920. A flat steel bar forming part of the side frame of a diamond tender truck. See ARCH BAR.

Truck Bolster. 4, Figs. 1913-1920; Figs. 1934-1935. A cross timber or steel beam in the center of a truck, to which the lower center plate is fastened, and on which the body of a tender or the front or back end of a locomotive rests. On the front truck of a locomotive, a heavy casting, called a center casting, usually takes the place of the bolster used on trailing or tender trucks. See BOLSTER.

Truck Bolster End Plate. A metal cap secured over the end of a truck bolster, sometimes used to take the place of the truss rod washers used with a trussed wooden bolster.

Truck Bolster Filling Piece. A small casting or plate inserted between the upper and lower members of a built-up metal tender truck bolster.

Truck Bolster Flitch Plates. See BOLSTER FLITCH PLATES.

Truck Bolster Guide Bars (Diamond Truck). 5, Figs. 1913-1920. More commonly called columns. Cast or malleable iron posts between the top and bottom arch bars, held in place by column bolts, which form a guide for the end of the truck bolster. They are frequently made with a projecting lug on the inside to form a support for the brake hangers of inside-hung brake beams.

Truck Box. 7, Figs. 1913-1920. A cast-iron box or case which encloses the journal of a truck axle, the journal bearing and key, and which holds the packing for lubricating the journal. Also called an axle box, grease box, oil box and pedestal box. See JOURNAL BOX.

Truck Brake. A system of levers actuated by compressed air or vacuum, for applying the brake shoes to the wheels of a truck.

Truck Brake Lever. A lever with one end attached to the crosshead of the truck brake cylinder, and the other end to the truck brake rod.

Truck Center Plate. 19, Figs. 1913-1920. One of a pair of plates made of cast or malleable iron or pressed steel that support a tender on the center of a truck. There are two, the body center plate and the truck center plate, that are sometimes also called the male and female center plates. The center pin or king bolt passes through them, but takes none of the strain except in emergencies. See CENTER PLATE.

Truck Centering Arrangement (Electric Locomotive). A device forming a flexible connection between the two-wheel truck of an electric locomotive and the frame. The function of the device is to enable the truck to take sharp curves with safety.

Truck Check Chain Eye. 21, Figs. 1913-1920. See CHECK CHAIN. A body check chain eye is also used.

Truck Check Chain Hook. A hook on the end of a CHECK CHAIN.

Truck Equalizer. 6, Figs. 997-1000; 14, Figs. 1027-1031. A beam whose ends rest upon the journal boxes of an engine or tender truck, and connected with a spring attached to the truck bolster. Its function is to distribute the weight of an engine or tender supported by the truck bolster equally to the two axles; hence its name. Also the beam connecting the transverse equalizer of a locomotive with the truck is called a truck equalizer.

Truck Frame. A structure composed of wooden beams, iron bars or cast steel, to which the journal boxes or pedestals, springs and other loose parts are attached, and which forms the skeleton of a truck. Wood is seldom used.

Truck Frame Crosstie. A transverse member of a truck frame, made of a flat bar or a pressed or rolled steel shape.

Truck Pedestal. 7, Figs. 997-1000; Fig. 1003. One of the vertical legs or jaws of a truck frame between which a journal box is placed. See PEDESTAL.

Truck Safety Beam. 17, Figs. 997-1000. A longitudinal piece connecting the end piece of the frame and the transom of a truck above the axles and inside of each wheel piece. Iron straps, called axle safety bearings, are attached to the beam and pass under the axles so as to hold them in position in case the axles or wheels on either side break.

Truck Safety Chain. See SAFETY CHAIN and CHECK CHAIN.

Truck Side. See TRUCK SIDE FRAME.

Truck Side Bearing. 22, Figs. 1913-1920. A plate, block or roller or spring plate attached to the top of the truck bolster, on which a corresponding bearing fastened to the body bolster rests. Their purpose is to prevent the tender body from having too much rocking or rolling motion. See SIDE BEARINGS.

Truck Side Frame. 3, Figs. 997-1000; 6, Figs. 1027-1031; Figs. 1930-1932. The longitudinal portion of a truck frame, on the outside of the wheels, which extends from one axle to the other, and to which the journal boxes and transoms are attached.

Truck Spring. Figs. 965, 973-975; 15, Figs. 976-987; 10, Figs. 997-1000; Figs. 2055, 2059, 2062-2064. Truck

springs are either coil, half-elliptic or elliptic springs, according to the design of truck. See SPRING.

Truck Spring Cap. See SPRING CAP.

Truck Spring Seat. 4d, Figs. 1913-1920. A hollow or cup-shaped piece of metal attached to a tender truck bolster or spring plank to form a bearing for a truck spring. See SPRING SEAT.

Truck Wheel. See WHEEL.

Truck Wheel Base. The horizontal distance between the centers of the first and last axles of a truck.

Truss Rod. An inclined rod used in connection with a king or queen post truss, or trussed beam, to resist deflection. It is attached to the ends of the beam, and is supported in the middle by a king post, truss block, or two queen posts between the beam and the rod.

Trunnion. A cylindrical projection upon the side of an object, serving as a support about which the object turns.

Tube. 35, Figs. 152-186. Also called flue. One of the pipes or flues that convey the products of combustion from the firebox to the smokebox and stack. Tubes are fitted in holes in the tube sheets at each end of a boiler, and where they enter the holes in the firebox tube sheet copper ferrules or sleeves are placed over the ends of the tubes to make a tight joint. Generally made of charcoal iron or mild steel. In Europe, brass and copper tubes are frequently used. See FERRULE and FLUE. See ARCH TUBE.

Tube (Beading). The following resolution was carried at the Master Mechanics' Convention of 1886:

Resolved, That it is the sense of this convention that in practice it is unnecessary to bead flues in the front end. (See page 152, report 1886.)

Tube Ferrule. See FERRULE.

Tube Heating Surface. The heating surface of a locomotive boiler contained in the fire tubes. When fire tube superheaters are used the heating surface contained in the flues accommodating the superheater units is added to the fire tube heating surface. In locomotive practice it is common to measure the tube heating surface by multiplying the outside circumference of a tube, in feet, by the distance between the tube sheets, in feet, and by the number of tubes expressing the result in square feet.

Tubes, Iron. At the 1894 convention of the American Railway Master Mechanics' Association standard specifications for iron locomotive boiler tubes were adopted. These were revised in 1904 and are as follows:

1. Tubes are to be made of knobbled, hammered charcoal iron, lap-welded.

2. Tubes must be of uniform thickness throughout, except at weld, where an additional thickness of .015 in. will be allowed. They must be circular within .02 in., and the mean diameter must be within .015 in. of the size ordered. They must be within .01 in. of the thickness specified and not less than the length ordered, but may exceed this by .125 in.

3. The minimum weights for tubes of various diameters and thicknesses are given in the accompanying table.

SURFACE INSPECTION

4. Tubes must have a smooth surface, free from all laminations, cracks, blisters, pits and imperfect welds. They must be free from bends, kinks and buckles, and from evidence of unequal contraction in cooling or injury in manipulation.

PHYSICAL TESTS

5. *Bending Tests.*—Strips ½ in. in width by 6 in. in length, planed lengthwise from tubes, after having been heated to a cherry red and quenched in water at 80 deg. F., shall bend in opposite directions at each end, as shown in sketch below, without cracks or flaws, and when nicked and broken by slight blows, these strips must show a fracture wholly fibrous.

Outside Diameter.	B. W. G. Nominal	M. M. G. Thickness	Minimum weight per foot.
1¾ inch	No. 13	.095	1.65
	" 12	.110	1.89
	" 11	.125	2.07
	" 10	.135	2.29
2 inch	" 13	.095	1.91
	" 12	.110	2.17
	" 11	.125	2.38
	" 10	.135	2.64
2¼ inch	" 13	.095	2.16
	" 12	.110	2.46
	" 11	.125	2.70
	" 10	.135	2.99
2½ inch	" 12	.110	2.73
	" 11	.125	3.02
	" 10	.135	3.37

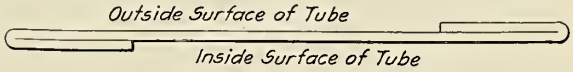

6. *Expanding Test.*—Sections of tubes 12 in. long shall be heated a length of 5 in. to a bright cherry red in daylight and then placed in a vertical position and a smooth taper steel pin at blue heat will be driven into the end of the tube by light blows of a 10-lb. hammer. Under this test the tube must stretch to 1⅛ its original diameter without splitting or cracking. The pin used shall be of tool steel tapered 1½ inches to the foot. In making this test, care must be taken to see that the end of the tube is smoothly trimmed.

7. One tube is to be tested, as required in paragraphs 5 and 6, in each lot of 250 tubes or less.

8. *Crushing Test.*—A section of tube 2½ in. long, when placed vertically on the anvil of a steam hammer and subjected to a series of light blows, must crush to a height of 1⅛ in. without splitting in either direction and without cracking or bending at weld.

9. *Hydraulic Test.*—Before shipping, each tube must be tested by manufacturer to 500 pounds per square inch, and each tube must be plainly marked in the middle: "Knobbled charcoal, tested to 500 pounds pressure."

10. In addition to the above tests, tubes which, when inserted into boilers, split or break while being expanded or beaded, and also individual tubes which fail to pass surface inspection, will be rejected and returned to the makers at their expense.

11. *Etching Test.*—In case of doubt as to the quality of material, the following test shall be made to detect the presence of steel. A section of tube, turned or ground to a perfectly true surface on the end, will be polished free from dirt or cracks, and the end of the tube will be suspended in a bath of nine parts water, three parts sulphuric acid and one part hydrochloric acid. The bath will be prepared by placing water in a porcelain dish, adding the sulphuric and then the hydrochloric acid. The chemical action must be allowed to continue until the soft parts are sufficiently dissolved so that the iron tube will show a decided ridged surface, with the weld very distinct, while the steel tube will show a homogeneous surface.

Tube Plug. A slightly conical piece of metal used to close a tube opening in a tube sheet in case a tube bursts or ruptures. It is inserted by means of a bar of special design called a PLUGGING BAR. See BOILER INSPECTION.

Tube Sheet. 53 and 103, Figs. 101-140; 10 and 32, Figs. 152-186; 29, Figs. 361-407. A plate or sheet forming one end of a locomotive boiler shell, and having a large number of holes in which the ends of the tubes are inserted. The plate next the smokebox is called the front tube sheet, and that next the fixebox the back tube sheet.

Tube Sheet Brace. 11, Figs. 152-186. A steel bar, rod or plate fastened at one end to a bracket or lug on the front tube sheet and at the other to the waist or shell of the boiler. Its purpose is to strengthen the tube sheet.

Tube Sheet Brace Crow Foot. See CROW FOOT.

Tube Sheet Brace Jaw. A fork or bifurcation formed of one end of a front tube sheet brace at the point of attachment to a crow foot or lug fastened to the front tube sheet.

Tube Sheet Brace Pin. A short rod or bolt passing through one end of a front tube sheet brace, to secure it to the lug or bracket.

Tube Sheet Ring. 13, Figs. 152-186; Fig. 295; 9, Figs. 317-319; 9, Figs. 361-407. A ring made of wrought or cast iron or steel, riveted around the hole in the front tube sheet through which the dry pipe passes, to strengthen the tube sheet and furnish a secure support for the tee or nigger head.

Tube Sheet Stay. See THROAT BRACE.

Tubes, Steel. Specifications for seamless, cold-drawn steel locomotive boiler tubes were adopted as standard by the American Railway Master Mechanics' Association in 1904. In 1913 they were revised and arranged to include lap welded and seamless steel boiler tubes, safe ends and arch tubes as follows:

I. MANUFACTURE

1. The steel shall be made by the open-hearth process.

II. CHEMICAL PROPERTIES AND TESTS

2. The steel shall conform to the following requirements as to chemical composition:

Carbon	0.08 — 0.18 per cent
Manganese	0.30 — 0.50 per cent
Phosphorus	not over 0.04 per cent
Sulphur	not over 0.045 per cent

3. (a) Analysis of two tubes in each lot of 250 or less may be made by the purchaser, which shall conform to the requirements specified in Section 2. Drillings for analysis shall be taken from several points around each tube.

(b) If the analysis of only one tube does not conform to the requirements specified, analyses of two additional tubes from the same lot shall be made, each of which shall conform to the requirements specified.

III. PHYSICAL PROPERTIES AND TESTS

4. (a) A test specimen not less than 4 in. in length shall have a flange turned over at right angles to the body of the tubes without showing cracks or flaws. This flange as measured from the outside of the tube shall be ⅜ in. wide for tubes 2½ in. or less outside diameter, and ½ in. wide for tubes larger than 2½ in. outside diameter.

(b) In making the flange test, the flaring tool and die block as shown should be used.

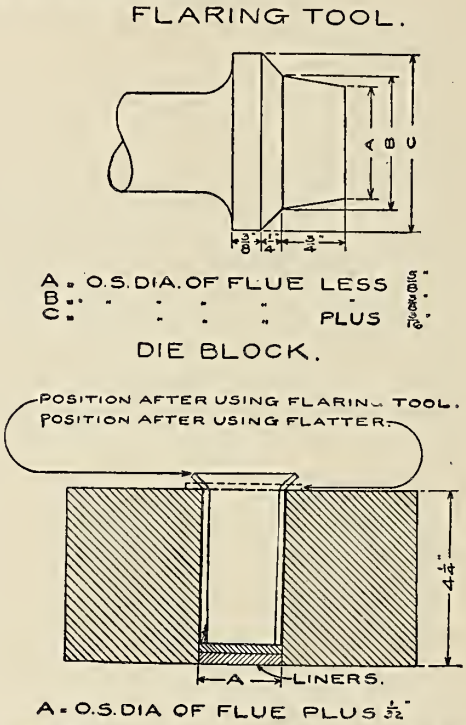

5. A test specimen 4 in. in length shall stand hammering flat until the inside walls are in contact, without cracking at the edges or elsewhere. For lap-welded tubes, care should be taken that the weld is not located at the point of maximum bending.

6. A test specimen 2½ in. in length shall stand crushing longtiudinally until the outside folds of metal are in contact, without showing cracks or flaws.

7. Tubes under 5 in. in diameter shall stand an internal hydraulic pressure of 1,000 pounds per square inch, and tubes 5 in. in diameter or over an internal hydraulic pressure of 800 pounds per square inch.

8. (a) Test specimens shall consist of sections cut from tubes selected by the inspector representing the purchaser from the lot offered for shipment. They shall be smooth on the ends and free from burrs.

(b) All specimens shall be tested cold.

9. One flange, one flattening and one crush test shall be made from each of two tubes in each lot of 250 or less. Each tube shall be subjected to the hydraulic test.

10. If the results of the physical tests of only one tube from any lot do not conform to the requirements specified in Sections 4, 5 or 6, retests of two additional tubes from the same lot shall be made, each of which shall conform to the requirements specified.

IV. STANDARD WEIGHTS

11. The standard weights for tubes of various outside diameters and thicknesses are as follows:

THICKNESS (INCHES)

Outside Diameter Inches.	.095 Pounds.	0.110 Pounds.	0.125 Pounds.	0.135 Pounds.	0.150 Pounds.	0.165 Pounds.	0.180 Pounds.
1.75....	1.68	1.93	2.17	2.33	2.56	....	....
2.00....	1.93	2.22	2.50	2.69	2.96	....	....
2.25....	2.19	2.51	2.84	3.05	3.36	....	....
2.50....	2.44	2.81	3.17	3.41	3.76	4.11	4.46
3.00....	....	3.40	3.84	4.13	4.57	5.00	5.42
3.50....	....	....	4.51	4.85	5.37	5.88	6.38
4.00....	....	....	....	5.57	6.17	6.76	7.34
4.50....	....	....	....	....	6.97	7.64	8.30
5.00....	....	....	....	....	7.77	8.52	9.27
5.25....	....	....	....	....	8.17	8.96	9.75
5.375...	....	....	....	....	8.37	9.18	9.99
5.50....	....	....	....	....	8.57	9.40	10.23
6.00....	....	....	....	....	9.37	10.28	11.19

12. The weight of the tubes shall not vary more than 5 per cent from that specified in Section 11.

V. WORKMANSHIP AND FINISH

13. (a) The finished tubes shall be circular within 0.02 in., and the mean outside diameter shall not vary more than 0.015 in. from the size ordered. The thickness of any point shall not vary more than 10 per cent from that specified. The length shall not be less, but may be 0.125 in. more than that ordered.

14. The finished tubes shall be free from injurious defects and shall have a workmanlike finish. They shall be free from kinks, bends and buckles.

VI. MARKING

15. The name or brand of the manufacturer and "Tested at 1,000 pounds" for tubes under 5 in. in diameter, or "Tested at 800 pounds" for tubes 5 in. in diameter or over, shall be legibly stenciled in white on each tube.

VII. INSPECTION AND REJECTION

16. The inspector representing the purchaser shall have free entry, at all times while work on the contract of the purchaser is being performed, to all parts of the manufacturer's works which concern the manufacture of the tubes ordered. The manufacturer shall afford the inspector, free of cost, all reasonable facilities to satisfy him that the tubes are being furnished in accordance with these specifications. All tests except check analyses and inspection shall be made at the place of manufacture prior to shipment unless otherwise specified, and are to be so conducted as not to interfere unnecessarily with the operation of the works.

17. (a) Tubes when inserted in the boiler shall stand expanding and beading without showing cracks or flaws, or opening at the weld. Tubes which fail in this manner will be rejected and the manufacturer shall be notified.

(b) Unless otherwise specified, any rejection based on tests made in accordance with Section 3 shall be reported within five working days from the receipt of samples.

18. Samples tested in accordance with Section 3, which represents rejected tubes, shall be preserved for two weeks from the date of the test report. In case of dissatisfaction with the results of the test the manufacturer may make claim for a rehearing within that time.

Tumbling Shaft. See Reverse Shaft.

Turbine. Figs. 1689-1707. A wheel turning on an axle, and so constructed that the steam impinging on the buckets at the rim shall impart to them as much of its energy as possible, causing the wheel and axle to rotate. Used to drive a dynamo for generating electricity for electric headlights.

Turnbuckle. A device inserted in the middle of a long rod for changing its length. Right and left screw turnbuckles, or single screw turnbuckles are the most common.

Turret. 137, Figs. 101-140. A distributing stand screwed into the steam space of a boiler to supply steam to the auxiliary devices, whistle, injector, etc. (See Cab Turret).

Twelve-Wheel Locomotive (4-8-0). Figs. 2, 71. Specifically a locomotive having 12 wheels, but commonly applied only to locomotives having a four-wheel front truck and four pairs of coupled driving wheels, but no trailing truck. Used in heavy freight service.

Tyre (of a Wheel). See Tire. The spelling "tyre" is the British method, and corresponds with the supposed origin of the word, which is from the fact that iron bands were first used on wheels in the city of Tyre, Syria.

U

U-Bolt. A double bolt made of a bar of iron or steel, bent in the shape of the letter U, with a screw thread on each end. See Throttle U-Bolt.

Unbalancing Valve (Intercepting Valve). 5, Figs. 609-612. A valve forming a part of the intercepting valve and by which the exhaust from the high pressure cylinders is instantaneously opened to the stack with the opening of the emergency valve and the closing of the intercepting valve.

Uncoupling Lever. 192, Figs. 101-140; Fig. 1081; 28, Figs. 1762-1766. An iron rod with a bent handle forming a lever, usually attached to the end sill or front bumper, by which the lock of the automatic coupler is opened and the uncoupling effected without going between the engine and cars. The lever and rod are in various forms, as the form of lock may require. See Safety Appliance Standards.

Uncoupling Lever Bracket. One of two or more small brackets attached to the back end of a tender and to the pilot bumper of an engine for holding the uncoupling lever.

Uncoupling Lever Chain. 7, Figs. 1052-1056. A short chain connecting the coupler lock with the uncoupling lever. See Uncoupling Lever.

Uncoupling Rod. See Uncoupling Lever.

Underframe. Figs. 1760-1782. A framework, which receives the buffing and pulling stresses and carries the weight of the floor and body of the tender. The underframe includes all the body framing below the floor. Tenders are now usually built with steel underframes.

Under-Running Rail. See Third-Rail.

Union (Pipe Fittings). Figs. 1729-1746. A means of uniting the ends of two pipes with a nut. This nut turns freely on one pipe, where it is held by a collar or ring, and is screwed on a thimble or sleeve attached to the other pipe. Used for many forms of pipe work, and takes its distinctive names, if any, from the parts with which it is connected, as drain pipe union, reservoir union, etc. See Pipe Union.

Union Elbow. Figs. 1730, 1738, 1740, 1742. A Union one-half of which is in the form of an elbow. See Union and Elbow.

Union Link. 262, Figs. 101-140; Fig. 723. A short bar connecting the crosshead arm to the combination lever of the valve gear.

Union Tee. Figs. 1736, 1737, 1739, 1741. A union one-half of which is in the form of a tee. See Union and Tee.

Universal Joint. "A device for connecting the ends of two shafts so as to allow them to have perfect freedom of motion in every direction within certain defined limits."—Knight.

This principle is applied in various forms of flexible connection for steam and air pipes between engine and tender. See Flexible Joint.

V

V-Shaped Screw Thread. A thread with a sharp edge at the top and sharp groove at the root. The Sellers

(U. S.) standard thread is flat at the top and at the root, and the Whitworth is rounded at those points.

Vacuum Brake (British). A system of continuous brakes which is operated by exhausting the air from some appliance under each car, by which the pressure of the external air is transmitted to the brake levers and shoes. So called in distinction from AIR BRAKES, which see, which are technically understood to refer only to brakes operating with compressed air, although in a literal sense the vacuum brake is also an air brake An ejector on the engine is ordinarily used for exhausting the air, connected with the rest of the train by pipes and flexible hose between the cars. A continuous pipe is connected through the train between cars by rubber hose, wound with wire to prevent collapsing, and having suitable couplings. Under each car is a large cylinder with a piston and rod connected to the brake levers actuating the brake shoes. These cylinders are connected to the train pipe through a simple form of ball valve. An EJECTOR on the locomotive maintains a vacuum of from 20 to 24 inches in the train pipe and in the cylinders under each car. In the release position the piston rests by its own weight in the bottom of the cylinder. To apply the brakes air is admitted to the train pipe and through the ball valve under each car to the space below the piston. The vacuum above the piston permits the atmospheric pressure below the piston to raise it and apply the brakes. A vacuum is always maintained above the piston and is available for applying the brakes at any time. In case the train parts, the admittance of air to the broken train pipe applies the brakes in both sections of the train. A valve in the guards may also be used to admit aid to the train pipe and apply the brakes in case of emergency. To release the brakes the vacuum is restored in the train pipe and under the pistons by working the ejector.

Vacuum Valve. Figs. 619, 621, 623, 629, 631, 633. A poppet valve inserted in the steam chest or cylinder head of a locomotive to relieve the vacuum formed when the engine is drifting—i. e., running with the throttle valve closed.

Valve. Figs. 666-699; Figs. 1220-1236. "A lid, plug or cover, applied to an aperture so that by its movement, as by swinging, lifting and falling, sliding, turning or the like, it will open or close the aperture to permit or prevent passage, as of a fluid."—Webster. See ALLEN VALVE, BALANCED VALVE, BLOWER VALVE, BY-PASS VALVE, DISTRIBUTING VALVE, ENGINEERS' BRAKE VALVE, INSIDE ADMISSION VALVE, INTERCEPTING VALVE, PISTON VALVE, REDUCING VALVE, RELIEF VALVE, SLIDE VALVE, THROTTLE VALVE, TRIPLE VALVE, VACUUM VALVE, etc.

Valve Body. 39, Figs. 648-761. The shell, case or frame of a valve.

Valve Chamber. See STEAM CHEST.

Valve Follower. Fig. 682. A circular cast iron or steel end piece fastened to the body of a piston valve and used to hold its packing rings in place.

Valve Gear. Figs. 701-751. The mechanism by means of which the slide valves or piston valves are operated for the purpose of admitting steam to and exhausting it from locomotive cylinders. Valve gears are so arranged as to allow steam to be cut off at any desired point of the stroke of the piston, and admit steam to either end of the cylinders in order to run the engine either forward or backward. The ordinary link motion or so-called Stephenson link motion uses two eccentrics for each valve, the eccentric rods imparting motion to a link having a sliding block to which one end of a rocker arm is connected. The other arm of this rocker is connected to and thus moves the valve rod and valve. The point of cut off as well as the direction in which the engine turns its wheels is determined by the position of the link block and rocker pin in the link. The link is suspended by a link lifter attached to an arm on the reverse shaft. When this shaft is turned by the operation of the reverse lever, reach rod and reverse shaft arms, the link is raised or lowered, thereby moving the link block and rocker pin either backward or forward and consequently causing the valve to move on its seat. Inside connected engines generally have the block directly connected to the valve rod without the interposition of any rocker.

The Walschaert valve gear, Figs. 716-737, differs from the ordinary link motion in having only one eccentric rod, in altering the position or travel of the valve by moving the end of a bar attached to the end of the valve rod up or down in the link, without moving the link, and in having the valve rod also attached to a lever that derives its motion from the crosshead. This last detail determines the LAP and the LEAD of the valve, and gives them a fixed value; whereas the ordinary link motion gives a variable lap and lead, affected by the valve travel. The Walschaert gear derives its motion from an eccentric crank or return crank on the main crank pin, or from one eccentric on the main axle. The eccentric rod is secured to one end of the link which is pivoted in the center on a pin held by a bracket bolted to the guide yoke. The link block is secured to a radius arm or bar, one end of which is attached to the end of the valve rod and the other end to the lifting arm of the reverse shaft. The motion imparted to the valve by the crosshead connection is small, as the crosshead arm and union link are attached to the lower end of the combining or combination lever while the radius arm and valve rod are connected close to the upper end, thus imparting only a slight motion to the valve rod. For large locomotives, Walschaert gear is now generally used, because it has lighter moving parts, and these parts are more accessible for inspection or repair than those of the common form of link motion. In the Gooch valve motion, the link is hung with its curvature reversed to its usual position, and in some cases is driven by eccentrics on an axle ahead of it.

The Baker valve gear, Figs. 738-745, gets its motion from two points, the eccentric crank and the crosshead. The eccentric crank moves the radius bar and the action the radius bar has on the valve is controlled by the reverse yoke. The radius bar and yoke takes the place of the link and block of a link motion. the crosshead moves the valve the amount of the lap and lead each way. This makes the lead constant and independent of the cut-off. Having a constant lead the valve should show lead opening in all cut-offs when engine is on either dead center.

Southern Valve Gear. See Figs. 746-748.

Young Valve Gear. See Fig. 751.

Valve Handle. A hand grip attached to the plug, stem or movable portion of a valve for the purpose of opening and closing it.

Valve Packing Ring. 40, Figs. 648-761. One of four or more cast iron or composition rings secured on the outside of a piston valve to cause it to fit steam tight in the bushing or valve chamber. They are usually made slightly larger than the internal diameter of the valve chamber bushing, cut, and sprung in place, in the same manner as the packing rings on a steam cylinder piston. See PISTON and PISTON VALVE.

Valve Plate. See BALANCE PLATE.

Valve Rod. 31, Figs. 101-140; 36, Figs. 648-761; 7, Figs. 697-701; Figs. 704, 715, 721. A steel rod attached to a rocker arm or link block at one end, and to a valve stem at the other, for communicating the motion of an eccentric rod to a valve.

Valve Rod Block. 44, Figs. 648-761. A rectangular piece of metal attached to a rocker pin, and fitted to slide vertically in a rectangular frame or yoke formed on the valve rod, thus allowing the rocker pin to travel in the arc of a circle while the valve rod moves in a straight line parallel to its own axis. Also called Scotch yoke block.

Valve Rod Block Yoke. 43, Figs. 648-761. See above.

Valve Rod Guide. 278, Figs. 101-140. A cast-iron support commonly bolted to the guide yoke, and having a hole through it in line with the valve rod stuffing box to keep the rod in its proper place. See VALVE STEM GUIDE.

Valve Rod Guide Bushing. A cylindrical lining or sleeve fitted in a valve rod guide to form a wearing surface for the rod.

Valve Rod Key. 37, Figs. 648-761. A wedge-shaped piece of metal inserted in an enlargement on the inner end of a valve rod to secure it to the valve stem.

Valve Rod Knuckle. A flexible joint connecting a valve stem to a valve rod. Since the rocker pin travels over an arc of a circle and the valve stem in a straight line, some form of flexible connection must be used to permit each to move in its own path.

Valve Rod Knuckle Pin. A bolt fitted through the two portions of the knuckle joint attached to the valve stem and valve rod, respectively, and forming a pivot or flexible connection for them.

Valve Seat. 34, Figs. 579-605; 39a, Figs. 648-761. The surface on which a valve rests.

Valve Stem. 30, Figs. 101-140; 2, Figs. 648-761; 8, Figs. 697-701; Fig. 732. A short rod secured at one end to the valve rod or valve stem crosshead and at the other to a piston valve, or to the yoke of a slide valve.

Valve Stem Crosshead. 279, Figs. 101-140; 3a, Figs. 648, 761; Figs. 729, 733, 846. A casting to which the valve stem is attached, sliding in the valve stem guides and connected to the valve rod or radius bar by a pin.

Valve Stem Guide. Figs. 648, 649, 655; 3, Figs. 648-761; Fig. 708. A sliding surface on which the valve stem crosshead moves. Made either in the form of a rectangular bar or cast solid with the valve chamber head.

Valve Stem Guide Bushing. 4, Figs. 648-761. A lining for a valve stem guide, forming the bearing surface and which can be removed and replaced by a new part when necessary.

Valve Stem Oil Cup Bracket. A holder fastened to the casting of a stem chest and holding an oil cup for the lubrication of the valve stem.

Valve Stem Packing. See PACKING.

Valve Stem Stuffing Box. See STUFFING BOX.

Valve Tee Ring. A metal ring, whose cross section has the shape of the letter T, placed on the body of a piston valve for holding the packing rings in place.

Valve Travel. One-half the linear distance traversed by a valve on its seat in a steam chest or valve chamber while the eccentric makes a complete revolution. The travel of a valve depends upon the position of the reverse lever on its quadrant.

Valve Yoke. 45, Figs. 648-761; Fig. 704. A rectangular-shaped steel frame fitted over a slide valve, to one end of which the valve stem is welded.

Valve Yoke Guide. A rod attached to the front of a slide valve yoke and extending through the front of the steam chest to serve as a guide to keep the valve in line on its seat.

Valve Yoke Guide Bushing. A sleeve fitted around the extension rod of a valve yoke in the front end of a steam chest. Seldom used.

Vanderbilt Tender. See SAFETY APPLIANCE STANDARDS.

Vanderbilt Tender Tank. Fig. 1759. A cylindrical tank mounted on a tender instead of the more common U-shape and water-bottom tanks.

Vanderbilt Boiler. A locomotive boiler having a corrugated cylindrical firebox requiring no staying. See STAYLESS BOILER and LENTZ BOILER.

Variable Exhaust Nozzle. Figs. 394, 400, 403. A nozzle designed so that the area of the steam outlet can be varied at will by the engineman, and so produce any desired draft.

Varnish. A fluid composed of resinous matter and solvents, capable of hardening without losing its transparency, and of adhering to wood, metal and other materials.

Vauclain Compound Locomotive. A four-cylinder compound locomotive having a high and low pressure cylinder on each side outside the frames and placed one above the other, with the two pistons attached to a common crosshead. See COMPOUND LOCOMOTIVE.

Ventilator. See CAB VENTILATOR.

Volt. The unit of electric pressure or electromotive force. The term voltage is sometimes used to describe the amount of electric pressure.

Voltage. See VOLT.

Vulcanized Fiber. A leathery material of great durability and toughness, made by subjecting vegetable fiber to the action of acids. It is insoluble in all ordinary solvents, such as oil, alcohol, ammonia, ether, etc. It is made in two classes, hard and flexible, the hard kind being used for dust guards of journal boxes on locomotive tenders.

W

Wagon Top Boiler. Fig. 188. A boiler having the steam dome over the firebox and a sloping course from in front of the firebox to the cylindrical shell. In some designs the steam dome is placed in the sloping course. Not in general use. See EXTENDED WAGON TOP BOILER.

Waist (of Boiler). That part of the boiler shell immediately in front of the firebox. See WAIST SHEET.

Waist Sheet. 41, Figs. 101-140. A vertical steel plate riveted to the waist sheet crosstie and to an angle piece which is also fastened to the waist of a boiler to secure that part to the frame, and at the same time

allow a small amount of expansion and contraction. See EXPANSION KNEE.

Waist Sheet Angle. 42, Figs. 101-140; 27, Figs. 152-186. The angle riveted to the boiler shell to which the waist sheet or buckle plate is riveted.

Waist Sheet Angle Liner. 78, Figs. 152-186. A small plate or pad riveted to the inside of the boiler shell where the waist sheet angle is attached, the rivets passing through each for strengthening the plate.

Waist Sheet Crosstie. 268, Figs. 101-140. A transverse brace or casting binding the frames together in front of the firebox and having a plate fastened to it and to the boiler to support the waist of the boiler at this point. See EXPANSION CROSSTIE.

Waist Sheet Wearing Plate. A steel strip riveted to the waist sheet angle to reinforce the bearing or support of the boiler at this point.

Walschaert Valve Gear. Figs. 716-737. A valve gear which has no eccentric on the axle, as in the Stephenson gear, and is entirely outside of the frames. See VALVE GEAR.

Washer. A plate of metal or other material, usually annular, which is placed under a nut or bolt head to give it a better bearing. Two or more washers are sometimes combined and called washer plates, strap washers, double or twin washers, triple washers, etc. They are sometimes made beveled or triangular for a rod or bolt, which is oblique, with reference to the bearing surface. A socket washer or flush washer is one provided with a recess for the bolt head, so as to leave it flush with the adjoining parts. Cut or wrought washers are those stamped out of rolled iron plates. Cast washers are made from cast iron.

Washing Boiler. See BOILER INSECTION.

Wash-out Plug. A short, solid metal cylinder with a screw thread cut on the outside and a square or hexagonal head for convenience in applying a wrench, screwed into the wash-out plug holes of a boiler. See WASH-OUT PLUG HOLE.

Wash-out Plug Hole. 106, Figs. 101-140; 61, Figs. 152-186. Holes cut in the boiler shell into which the wash-out plugs fit. Usually placed just above the crown sheet and at the firebox corners so that these parts of a boiler are made easily accessible for cleaning. See BELLY WASH-OUT HOLE.

Wash-out Plug Hole Flange. 67, Figs. 152-186. A flange riveted around a wash-out plug hole to strengthen the boiler shell and to furnish a secure attachment for the wash-out plug or cover.

Waste. The spoiled bobbins of cotton or woolen mills, used for wiping machinery and for JOURNAL PACKING.

Waste Cock or Waste Valve. An arrangement attached to and forming part of the body of some types of injector, consisting of a valve provided with a handle or lever. If this valve is left open when the steam and water supply valves to the injector are also open, steam passes back through the injector feed pipe and may thus be used to prevent the water in the tender tank from freezing.

Water. Boilers fed with water that forms much scale must be washed out at frequent intervals; in some districts even at the completion of every trip. Common practice is to install water-treating plants at water stations, by means of which the scale-forming matters in the water are chemically treated and removed before the water reaches the locomotives.

Water Brake. An arrangement, consisting of a set of pipes and valves connected to a locomotive boiler below the water line, for admitting water to the cylinders to retard the motion of the pistons and thus act as a brake on the locomotive, which is run with the reverse lever back of the center. It is used on lines having long, steep grades.

Water Brake Valve. A globe valve with its connecting pipe screwed in the boiler back head below the water line, for operating the water brake.

Water Cooler. A tank or vessel for carrying drinking water which is usually cooled with ice. The sides are generally made double, and the space between filled with some non-conducting substance. When used on locomotives they are commonly located on the tender tank.

Water Gage or **Water Glass.** Figs. 1166-1175. A device to enable an engineman or fireman to observe the height of water in a locomotive boiler. It consists of two brass fittings screwed into the back head, one above the other, and connected by a stout glass tube or a metal frame in which a glass is inserted which communicates, through the fittings, with the water and steam in the boiler. The water level showing in the glass tube is the same as that inside the boiler. See BOILER INSPECTION.

Water Gage Cock. One of two brass fittings screwed into a locomotive boiler head, having a valve or plug cock for opening or closing communication between the boiler and the water gage glass.

Water Gage Cock Extension. A piece of pipe sometimes required to connect a water gage cock to the boiler, as when the boiler lagging is too thick for the gage cock to reach through.

Water Gage Cock Gland. A neck or extension formed on a water gage cock to receive the end of the glass tube, or the stem of the cock or plug.

Water Gage Lamp. See GAGE LAMP.

Water Gage Nut. A hexagonal brass nut surrounding a water gage glass near the end and holding an elastic washer so as to prevent leakage of water or steam around it.

Water Gage Protector. Figs. 1176-1180. A casing attached to a water gage to prevent the glass from flying about in case of breakage.

Water Glass. See WATER GAGE.

Water Glass. At the Master Mechanics' convention of 1893 the following resolution prevailed:

Resolved, That while the Master Mechanics' Association regards the water glass as a convenience and an additional precaution against low water, we do not regard it as an absolute necessity to the safe running of locomotives. (See page 161, report 1893.)

Water Grate. See GRATE and WATER PULL BAR GRATE.

Water Leg. The space between the inner and outer sheets of a firebox. See SIDE WATER SPACE.

Water Pull Bar Grate. A grate designed for burning anthracite coal, consisting of tubes running longitudinally through the bottom of the firebox and communicating with the front and back water legs, usually screwed into the tube sheet and expanded into the back sheet, a copper ferrule being used to insure a tight joint. Between the water tubes, iron pull bars, enclosed in short tubes, pass completely through the back water leg and project a short distance outside the back head. These outer ends have slots in them,

into which a rod can be put, and the bars pulled out for the purpose of dumping or cleaning the fire. Midway of the length of the firebox is a bearer or bridge that supports both the tubes and bars that form the grate. A similar bearer is placed at the front end of the box to hold the bars. See GRATE.

Water Scoop. Figs. 1842-1851. A device for putting water in a locomotive tender, while it is in motion, from a trough laid between the rails, and sometimes called a track tank. It consists of a cast-iron or steel plate conduit of rectangular cross section, passing up through the tender tank and turned over at the top so as to discharge the water downward. The lower end, underneath the tender frame, is fitted with a scoop or dipper that can be lowered into the trough by a lever worked by hand, or by compressed air applied in a cylinder whose piston rod is connected to the mechanism for raising and lowering the scoop. The water is forced up through the scoop pipe into the tender tank when the scoop moves through the trough at a speed of from 25 to 40 miles per hour.

Water Scoop Air Cylinder. Fig. 1844; 25, Figs. 1842-1851. A small cast-iron cylinder fastened underneath a tender for operating the water scoop. Compressed air is conveyed to it from the main air reservoir through a valve, thus moving the piston. The piston rod is connected to the levers that lower the dipper into the water trough between the rails. To insure the rapid raising of the dipper when the locomotive reaches the end of the track tank, a coil spring is fastened to the scoop mechanism.

Water Scoop Air Cylinder Piston. A metal disc fitted inside a water scoop air cylinder and having attached to it a rod connected to the operating mechanism of the scoop.

Water Scoop Arm. 6, Figs. 1842-1851. A bent lever or bell crank, to one end of which the air cylinder piston rod is attached, while to the other the links for raising and lowering the dipper are bolted.

Water Scoop Body. See WATER SCOOP DIPPER.

Water Scoop Cylinder Piston Rod. A wrought-iron or cast-steel rod attached to the piston of the air cylinder at one end, and to the bell crank for operating the water scoop at the other.

Water Scoop Cylinder Support. A metal carrier secured underneath a tender frame for the purpose of holding the water scoop air cylinder, which is bolted to it.

Water Scoop Delivery Pipe. The square pipe which conveys the water from the dipper to the tank.

Water Scoop Delivery Pipe Brace. A rod secured to the tender frame center sills to stiffen the delivery pipe.

Water Scoop Dipper. 2, Figs. 1842-1851. A hinged extension or hood at the end of a water scoop. That portion of the scoop that goes into the water.

Water Scoop Dipper Adjusting Bracket. 12, Figs. 1842-1851. A support or holder fastened underneath a tender to limit the movement of the dipper arm and thus prevent the scoop from hanging too low and striking the ties or ballast.

Water Scoop Dipper Lifting Link. 3, Figs. 1842-1851. A short metal bar attached to the bell crank or arm of the scoop-lifting mechanism and to the dipper, for raising it out of the water.

Water Scoop End Support. 14, Figs. 1842-1851. A metal rod fastened to either side of the outer end of a water scoop pipe, next to the dipper, and to the under side of the tender frame.

Water Scoop Hanger. The bracket or frame fastened underneath a tender frame to support a water scoop and the mechanism for raising and lowering it.

Water Scoop Lifter. One or two links or bars attached to a water scoop at one end and to the water scoop arm at the other.

Water Scoop Locking Cylinder. A small air cylinder whose function it is to hold the water scoop in place and prevent it from dropping down on the track.

Water Scoop Neck. The upper end of a water scoop; that portion that joins the water scoop pipe directly under the tender tank.

Water Scoop Operating Lever. The arm or lever by which the water scoop is raised or lowered by hand. It extends up through the tender deck alongside the tank leg.

Water Scoop Operating Lever Fulcrum. A cast iron support fastened on a tender frame and holding a bolt or pin that passes through the water scoop operating lever.

Water Scoop Pipe. 5, Figs. 1842-1851. The cast iron or steel plate conduit passing up through a tender for conveying the water forced into the scoop to the top of the tank.

Water Scoop Pneumatic Valve. The valve for admitting compressed air to a water scoop cylinder.

Water Scoop Reach Rod. 8, Figs. 1842-1851. A long piece of pipe or solid rod, attached to the water scoop operating lever at one end and the scoop lifting arm at the other.

Water Scoop Shaft. 7, Figs. 1842-1851. A shaft fastened at right angles to a water scoop arm and resting in bearings in supports or hangers attached to the tender frame by bolts or rivets.

Water Scoop Shaft Bracket. 10, Figs. 1842-1851. A carrier attached to a tender frame and holding the ends of the water scoop shaft.

Water Scoop Side Brace. A rod fastened on either side of a water scoop and to the side sill of a tender to act as a transverse brace for the scoop.

Water Scoop Spring. 19, Figs. 1842-1851. The spring used to assist in lowering or raising a water scoop.

Water Scoop Spring Rod. A rod attached to a water scoop operating mechanism and to the coil spring which forms a part of it.

Water Space. That part of a locomotive boiler that is filled with water, in contrast with the part normally occupied by steam. Usually designated as FRONT, BACK and SIDE WATER SPACE. WATER LEG, which see, is also called a water space.

Water, System of Circulation. Figs. 326-328.

Water Tube. 58, Figs. 152-186. A pipe containing water and surrounded with hot gases in contrast to a fire tube surrounded by water and having hot gases passing through it. See ARCH TUBE.

Water Tube Boiler. A boiler in which water circulates through tubes surrounded by hot gases, the products of combustion in the firebox. Not extensively used for locomotives, although tried on the London & South Western.

Watt. An electrical unit expressing the rate at which energy is transformed, or work done. It is equal to 1/746 part of one horse-power, or 44.23 foot pounds

per minute. It is used to express the product of the voltage of an electric circuit and the current or amperage. As it is a very small unit, a multiple of it, 1,000 times as large, and called a kilowatt, is commonly used.

Wedge. A liner or key used between the top of a journal box and its bearing to hold the latter in place. See Journal Bearing Wedge.

A Driving Box Wedge (288, Figs. 101-140) is a tapering liner for the jaws of a pedestal to adjust the position of the driving box and take up wear.

Wedge Bolt. Fig. 931. A bolt passing through the pedestal cap or binder of a driving or trailing wheel for adjusting the pedestal wedge.

Weight of Train That Can be Started on a Given Grade

(Electric Locomotives).

This table is based on the following assumed data:

Train Friction.....10 lbs. per ton
Acceleration .....20 lbs. per ton
Coefficient of Adhesion.....25%

Tons Weight of Trailing Train.

Weight of Locomotive.	Grade. 1%	2%	3%	4%	5%
25 tons	225	155	115	90	70
30 tons	270	185	135	105	85
40 tons	360	245	180	140	115
50 tons	450	310	230	180	140
60 tons	540	370	270	210	170
70 tons	630	430	320	250	200
80 tons	720	490	365	280	230
90 tons	810	550	410	320	255
100 tons	900	615	455	355	285

Weight on Drivers. The weight of a locomotive in working order that is supported by the coupled driving wheels when it rests on a straight and level track.

Welt. 50 and 51, Figs. 152-186. A steel plate riveted to and joining the ends of a boiler plate, forming a butt joint. Usually an inside welt is riveted over the seam on the inside of the boiler shell and an outside welt is riveted on the outside, making a double reinforcement of the seam. Generally used on Longitudinal Seams.

Wheel. Figs. 2018-2053. A circular frame or solid piece of wood or metal which revolves on an axis.

A circular frame or disc, revolving on an axle, serving to support a moving vehicle. Engine truck wheels are sometimes made of chilled cast iron, but more commonly have a cast iron or cast steel center with a steel tire fastened on, as are also tender truck wheels. See Wheel Center. Driving wheels and trailing wheels are always made with a spoke center of cast iron or cast steel with a steel tire shrunk on. In addition to shrinkage, driving wheel tires are held on by bolts through the rim and by retaining rings, also held by bolts. See Brake Wheel, Chilled Cast Iron Wheel, Double Plate Wheel, Driving Wheel, Single Plate Wheel, Spoke Wheel. See Rule 44, Locomotives, Inspection and Testing.

For specifications and contour of tires, see Tires.

Wheel. (A. R. M. M. A. Standards). Figs. 2277-2288.

Wheel (Specifications and Tests for Cast Iron). The following specifications for 33-in. cast iron wheels for tenders of 95,000 lb., 132,000 lb. and 161,000 lb., gross weights, were adopted as recommended practice by the American Railway Master Mechanics' Association in 1913:

I. MATERIAL AND CHILL

(1) The wheels shall show clean, gray iron in the plates, except at chaplets, where mottling to not more than ½ in. from same will be permitted. The depth of pure white iron shall not exceed 1 in. nor be less than ½ in. in the middle of the tread.

(a) It shall not exceed 1 in. in the middle of the tread nor be less than ⅜ in. in throat for wheels having a maximum weight of 625 lbs.

(b) It shall not exceed 1 in. in the middle of the tread nor be less than 7/16 in. in the throat for wheels having a maximum weight of 675 lbs.

(c) It shall not exceed 1 in. in the tread nor be less than ½ in. in the throat for wheels having a maximum weight of 725 lbs.

(d) The depth of white iron shall not vary more than ¼ in. around the tread on the rail line in the same wheel.

II. PHYSICAL PROPERTIES AND TESTS

2. *Sampling.*—When ready for inspection, the wheels shall be arranged in groups, all wheels of the same date being grouped together, and for each 100 wheels which pass inspection and are ready for shipment, two representative wheels shall be taken at random, one of which will be subjected to the drop test.

3. *Drop Test.*—The wheels shall conform to the following drop-test requirements:

(a) The test wheel shall be so placed on the three supports, with flange turned downward, that the tup will strike centrally on the hub. When tested in accordance with the following conditions, the wheel shall stand the specific number of blows without fracture:

Table I.

Weight of Wheel, Pounds.	Weight of Tup, Pounds	Height of Drop, Feet.	Number of Blows.
625	200	9	10
675	200	10	12
725	200	12	12

4. *Thermal Test.*—Should the test wheel stand the given number of blows without breaking into two or more pieces, the inspector will then subject the other wheel to the following test:

(a) *Preparation.*—The wheel shall be laid with the flange downward in the sand and a channel way 1½ in. wide and 4 in. deep must be molded with green sand around the wheel. The clean tread of the wheel must form one side of the channel way and the clean flange must form as much of the bottom as its width will cover.

(b) *Test.*—The above described channel must be filled with molten cast iron, which shall be hot enough when poured so that the ring which is formed, when the metal is cold, shall be solid or free from wrinkles or layers. The time when pouring ceases must be noted, and two minutes later an examination of the wheel must be made. If the wheel is found broken in pieces or if any cracks in the plate extend through or into the rim, all wheels of the same tape size as the wheel broken will be rejected.

5. *Drop-test Machine.*—The three supports shall not be more than 5 in. wide. The anvil shall be supported on rubble masonry at least 2 ft. wide and shall weigh not less than 1,700 lbs. The striking face of the tup shall be 8 in. in diameter and be flat.

III. RETEST

6. *Number of Tests.*—In making the drop test, should the test wheel break into two or more pieces with less than the required number of blows, then the

second wheel shall be taken from the same lot and similarly tested. If the second wheel stands the test it shall be optional with the inspector whether he shall test the third wheel or not. If he does not do so, or if he does and the third wheel stands the test, the 100 wheels will be accepted as filling the requirements of the drop test.

IV. DIMENSIONS, TAPING AND GAGING

7. *Dimensions.*—The normal diameter of the wheel produced by the chill must be the M. M. standard 33 in., measured at a point 2⅝ in. from the outside of the tread of the wheel. Wheels furnished under this specification shall not vary more than ¼ in. above or below the normal size measured on the circumference and the same wheel shall not vary more than 1/16 in. in diameter.

The thickness of the flange shall be regulated by the maximum and minimum flange thickness gages adopted by the American Railway Master Mechanics.

8. *Taping.*—All wheels shall be taped with M. M. standard design of wheel circumference tape, having numbers 1, 2, 3, 4 and 5 stamped ⅛ in. apart, the figure 3 to represent the normal diameter 103.67 in. circumference. The figure 1, the smallest, and the figure 5 the largest.

V. WEIGHTS

9. All wheels furnished under these specifications shall conform to the respective sections shown by the M. M. ratings for different weights of wheels and weights shall be as follows:

Maximum Gross Weight of Tenders, Pounds.	Maximum Weight of Wheel Not Exceeding, Pounds.	Minimum Weight of Wheel Not Less Than, Pounds.
95,000	625	615
132,000	675	665
161,000	725	715

(a) *Cores.*—In case of wheels ordered with cores smaller in diameter than the standard, the additional weight should be considered as an addition to the normal weight and paid for by the purchaser.

(b) *Note.*—Weights given in the above table are based on M. M. standard drawings covering wheel design.

10. *Under Weight.*—Wheels that are under minimum weight will be set aside and not further considered.

11. *Over Weight.*—Wheels that are over the maximum weights will be at the expense of the manufacturer.

VI. WORKMANSHIP AND FINISH

12. *Workmanship.*—Chills shall have an inside profile that, in the finished wheel, will produce the exact form of the flange and tread contour shown by the M. M. drawings.

13. *Finish.*—The body of the wheel must be smooth and free from slag, shrinkage or blow holes. The tread shall be free from deep and irregular wrinkles, slag, chill cracks and sweat or beads in the throat and swelled rims.

VII. MARKINGS

14. *Marking.*—All wheels shall be numbered consecutively in accordance with the instructions from the railroad company purchasing them, and shall have the initials of such railroad company, also the wheel number, the weight of the wheel and month, day and year when made plainly formed on the inside plate of casting. No two wheels shall have the same number. All wheels shall also have the name and place of manufacture plainly formed on the outside plate in casting. Wheels conforming to the requirements and furnished under this specification shall have the letters M. C. B. 1909 plainly formed on the outside plate in casting.

VIII. REJECTION LIMITS

15. If in any lot of wheels submitted for test, the test wheel fails to meet the requirements of the drop, chill or thermal test, then all of the wheels in tape number and weight corresponding to the test wheel will be rejected.

(a) *High Chill.*—In case the rejection is for high chill, weak breaking strength, or failure in the thermal test, the test will be continued in the next high number of tape size.

(b) *Low Chill.*—If the rejection is for low chill, the test will be continued in the next lower number tape size.

Wheel Base. The horizontal distance between centers of the first and last axles of a locomotive or tender. It is usual, in stating locomotive dimensions, to give the rigid wheel base, the truck wheel base and the total wheel base. See Rigid Wheel Base, Truck Wheel Base.

Wheel Bore. 4, Figs. 2018-2021. The hole through the hub or central part of a wheel in which an axle is fitted. Also called axle seat.

Wheel Center. The portion of a wheel inside of the tire. The centers of engine and tender truck wheels are sometimes in one piece and sometimes made up of two parts, the hub or boss, and the central filling piece. Face plates, front and back, are also used. The term is seldom applied to chilled, cast or rolled steel wheels. Driving and trailing wheel centers are made of cast iron or cast steel. See Driving Wheel Centers.

Wheel Circumference Measure. (A. R. M. M. A. Standard.) Fig. 2270.

Wheel, Contour of (A. R. M. M. A. Standard). See Tire Section.

Wheel Cover. A strip of thin steel plate, curved to a radius slightly greater than that of a wheel, to prevent mud and oil being splattered over the locomotive.

Wheel Cover Block. A small piece of metal fastened to a running board or engine truck frame for the attachment of a wheel cover.

Wheel Cover Bracket. A small cast iron post or holder, for the attachment of a wheel cover.

Wheel Defect Gage. (A. R. M. M. Assoc. Standard.) In 1908 the wheel defect gage, Figs. 2272-2273, was adopted as a standard by the American Railway Master Mechanics' Association. Modified 1909. This gage is for the purpose of determining whether the flanges of wheels are of proper thickness, and it is specified that it is to be used when cast iron wheels are to be applied to an engine or tender. In 1914 the gage had a notch added for measuring flat spots 1 in. and 2 in. in length.

Wheel, Driving. See Driving Wheel.

Wheel Fit. The surface which bears on the axle Wheel Seat after the axle has been forced into the wheel. Also called axle fit.

Wheel Flange. 6, Figs. 897-907. The projecting edge or rim of the periphery of a car wheel for keeping it on the rail. (A. R. M. M. A. Standard.) Fig. 2274.

In 1908 a maximum and minimum flange thickness

gage was adopted as standard. It was modified in 1909 and revised in 1913 to combine a maximum and minimum thickness, height and throat radius gage for solid steel and steel-tired wheels. In 1914 it was corrected to have a radius with which the gaging point at the throat is struck from 5/8 to 1 15/16 in. Likewise the 5/8 in. radius for the minimum flange thickness gage was changed to 1 13/16 in.

Wheel Gage. (A. R. M. M. A. Standard.) Fig. 2275.

Wheel Gaging Points. (A. R. M. M. A. Standards.) Fig. 2271.

Wheel Hub. 3, Figs. 897-907. The part of a wheel surrounding the axle on which it is mounted and from which the spokes of a spoke wheel radiate. British, Boss. See Hub.

Wheel Hub Liner. 11, Figs. 897-907. A brass or bronze disk secured to the inside of a wheel hub to form a wearing surface between the hub and the outside face of the box. Such liners are used on engine truck wheels, driving and trailing wheels. Cast iron liners are also used and left loose on the hub.

Wheel Key. A piece of steel slightly tapered, driven into a slot or keyway cut longitudinally in the wheel seat of a driving axle and a corresponding slot in the bore through a driving wheel hub, to key or secure the wheel to the axle.

Wheel Plates. That part of a cast iron engine truck or tender truck wheel which connects the rim and the hub. It occupies the place and fulfils the same purpose as the spokes in an open or spoke wheel. On steel-tired wheels the plates connecting the tire and hub, and bolted or fastened to each, are called wheel plates. Distinguished as front and back face plates.

Wheel Ribs (Cast Iron Wheels). More commonly, brackets. Projections cast usually on the inner side of plate car wheels to strengthen them. They are placed in a radial position and are often curved so as to permit the wheel to contract when it cools.

Wheel Rim Filling Piece. A flat steel strip inserted in one of the radial spaces left to allow for shrinkage in casting in the rim of a driving wheel center.

Wheel Seat. 1, Figs. 908-909 and 1044-1048. That portion of an axle that is forced into and bears upon a driving or truck wheel. Also called Wheel Fit.

Wheel Spoke. 7, Figs. 897-907. "One of the radial arms which connect the hub with the rim of the wheel."—Knight.

In 1907 the following standards were adopted by the American Master Mechanics' Association for the dimensions of the spokes of locomotive driving wheels:

In order to properly support the rim and resist tire shrinkage, spokes should be placed from 12 to 13 inches apart from center to center, measured on the outer circumference of the wheel center.

Spokes at crank hub should not be located at center line of wheel, but on either side, so as not to bring a short spoke directly in line with the crank-pin hub. Section of spokes at large end to have an area of from 9 to 10 inches, will form as shown in 1, Fig. 2314. Section of spokes at small end to have an area of from 5¾ inches to 6 inches, with form as shown in 2, Fig. 2314. The sections shown are taken at the base of the fillets uniting the spoke to the hub and rim.

Wheel Tread. (A. R. M. M. A. Standard.) Fig. 2274. The exterior cylindrical surface of a wheel which bears on the rails. The usual width of wheel tread is about 4 inches, measured from the outside of the wheel tread to the throat or inside of flange.

Wheel Web. That portion of a cast iron truck wheel center between the hub and the rim.

Whistle. Figs. 1667-1672; 154, Figs. 101-140. A device for producing a loud sound to give warning and as a means of signaling to trainmen and others. It consists of an inverted brass bell or cup, against the edge of which steam is directed from an annular nozzle by means of a suitable valve. The sound is produced because the steam, striking the edge of the whistle bell with considerable force, sets the air within in vibration, and causes it to emit a tone the pitch of which depends upon the length of the whistle and the velocity with which the steam impinges upon it. A chime whistle is made with the bell divided into three compartments or chambers, of unequal length. Each chamber therefore sounds a different tone; and by giving the three chambers certain relative lengths, a powerful yet agreeable and harmonious note can be produced. The whistle is attached to the dome or turret on the boiler. See Air Whistle. See Locomotives, Inspection and Testing.

Whistle Bell. 4, Fig. 1670. A cylindrical brass chamber with flat or hemispherical top, for producing a sound by steam blown against the edge. It is screwed on a stem directly over the whistle bowl.

Whistle Bowl. A hemispherical brass cup with a cylindrical extension below it containing a valve for admitting steam. The bowl has a disc over it that does not come quite to the edge, thus leaving an annular opening through which the steam escapes.

Whistle Crank. A short metal arm attached to the whistle lever in the cab for imparting motion to the lever or bar that opens the whistle valve.

Whistle Crank Fulcrum. A cast-iron bracket fastened in the cab of a locomotive to form a bearing for the whistle shaft.

Whistle Extension. 11, Fig. 1670. The cylindrical pipe below the bowl of a whistle, containing the whistle valve.

Whistle Flange. 80, Figs. 152-186. A flange riveted around the hole in the boiler shell where the whistle is attached for the purpose of strengthening the plate and furnishing a secure attachment for the whistle.

Whistle Lever. 231, Figs. 101-140. An arm or bar in the cab of a locomotive for operating the whistle valve. It is attached to a crank that moves the lever on the whistle through the medium of a link or bar.

Whistle Lever Fulcrum. A small bracket attached to a whistle extension to hold the pin on which the whistle lever is pivoted.

Whistle Lever Rod. A link or bar connecting the whistle lever on the whistle with the operating lever in the cab.

Whistle Nut. 1, Fig. 1670. A square or hexagonal brass nut screwed on the upper end of a whistle stem to secure the whistle bell in place.

Whistle Post. See Whistle Stem.

Whistle Reservoir (Train Air Signal). A small steel reservoir sometimes installed for storing air to be used by an air whistle on electric locomotives.

Whistle Stem. 2, Fig. 1670. A steel or malleable iron standard, screwed in the center of a whistle bowl, and supporting the whistle bell. The bell has a hole through the top, tapped with a thread to fit that cut

on the upper end of the whistle stem, which allows the height of the bell above the bowl to be adjusted.

Whistle Shaft. A short metal rod in the cab, supported by a hanger or fulcrum at each end and having the whistle lever and whistle crank attached to it.

Whistle Valve. 13, Fig. 1670. A disc with a shank or stem attached, fitting in an opening in the whistle extension for admitting steam to the whistle to cause it to sound. It is operated by a set of levers in the cab.

Whyte Classification. Figs. 1 and 2. See Whyte Nomenclature.

Whyte Nomenclature. Figs. 1 and 2. A system of classifying locomotives suggested by F. M. Whyte, and based upon the wheel arrangements, grouping each set of truck and coupled driving wheels by number, beginning at the pilot or head end of the engine. Thus, a locomotive commonly known as a consolidation, having a two-wheel front truck, four pairs of coupled driving wheels and no trailing wheels, is denoted in the Whyte system as a (2-8-0), a six-wheel switching engine as a (0-6-0), a Pacific type as a (4-6-2), an eight-wheel American type as a (4-4-0), a Mallet articulated having a two-wheel front truck, four pairs of coupled driving wheels in the leading unit, four pairs of coupled driving wheels in the rear unit and a two-wheel trailing truck as a (2-8-8-2) locomotive, and so on.

Wide Firebox. Figs. 148, 157, 189. A wide, shallow firebox resting on the frames and extending out beyond driving wheels at the sides. The Wootten Firebox, which see, is a wide firebox for burning anthracite coal. See Firebox.

Window Sill. A horizontal piece of wood or metal under a window on which the sash rests when down.

Wiring. Figs. 2134, 2135, 2192, 2205, 2206. The arrangement of conductors for electricity on a locomotive or car.

Wootten Firebox. Figs. 153, 185. A locomotive firebox, very wide and shallow and having a curved crown sheet of large radius, used for anthracite coal burning locomotives which require a large grate area. See Firebox.

Worn Flat (Car Wheels). Irregular wear under fair usage, due to unequal hardness of the tread of the wheel, and to be carefully distinguished from slid flat, which is a defect produced by the slipping of the wheels from excessive brake pressure.

Wrecking Chain. Fig. 2314. A heavy steel chain, carried on a locomotive for use in emergencies.

Wrecking Frog. Figs. 2347-2350. A device having one end elevated to form an inclined plane by which derailed trucks can be replaced upon the track. Also commonly called replacers and car replacers.

Wrench. Figs. 2289, 2291, 2343-2345. A contrivance for screwing and unscrewing a nut.

A socket wrench is one having a cavity to receive a square or hexagonal end.

A spanner is a wrench for use on round or many sided nuts, like hose couplings, to which lugs or slots are added for engaging with the wrench.

An alligator wrench for use on pipe or other cylindrical surfaces has immovable jaws, one serrated and the other smooth, inclined to each other at an acute angle.

A monkey wrench has smooth, parallel jaws, one of which is fastened to the handle or stem, while the other can be moved up to or away from it by a sleeve nut working on a thread cut on the stem.

Wrought Iron. A slag-bearing, malleable iron, which does not harden materially when suddenly cooled.

Wrist Pin. See Crosshead Wrist Pin.

Y

Y Pipe. See Receiver Pipe Connection.

Yoke. See Bell Yoke, Coupler Yoke, Guide Yoke, Valve Yoke.

ILLUSTRATED SECTION

A definite plan has been followed to secure a logical arrangement of the Illustrated Section. It opens with general photographs of the various types of locomotives and continues with a section giving the general drawings of typical locomotives of each type. The illustrations in both of these parts are grouped largely according to the wheel arrangement of the locomotives. The boiler section follows, including general views and details. Naturally the front end, or smokebox, is covered in this part, including the superheater. Naturally also it develops toward a consideration of those features affecting the combustion, such as grates, ash pans, brick arches and stokers.

The frames which carry the boiler form the next section, after which the course of the steam is followed as it enters the cylinders and is controlled by the valves and valve gear. After illustrating the details, even to the control of the valve gear—the reversing mechanism in the cab—the force developed by the steam in the cylinders is followed back through the piston rod, crosshead, guides, connecting rods, crank pins and driving wheels. Then follow the driving axles, driving boxes, shoes and wedges and spring rigging.

Starting at the pilot, bumper beam and coupler, and passing back over the running board, the cab is reached and its construction, as well as the various fittings in it and on the back head of the boiler, are illustrated. Closely allied to, and following it, are the subjects of lubrication, injectors, check valves, etc. The air brake and brake gear are followed by such details as sanders, bells, whistles, headlights, etc. The tender and its details require a large section. Then follow sections on the electric locomotive and motor cars. The next section is devoted to the Master Mechanics' Standards. Tool equipments carried on a locomotive are illustrated; there are also tool lists for such equipment as used on several roads.

Thus it may be seen that while the arrangement of the Illustrated Section is logical, a synopsis or table of contents would be of little use for ready reference. Practically, the definition section, which covers the locomotive in detail and contains specific references to the illustrations of the details, may best be used for this purpose.

Symbol.	Wheel Arrangement.	Type.
0-4-0	◿ ○○	*4-Wheel Switcher.*
0-4-2	◿ ○○○	
0-4-4	◿ ○○○○	*Forney 4-Coupled.*
0-4-6	◿ ○○○○○	
0-6-0	◿ ○○○	*6-Wheel Switcher.*
0-6-2	◿ ○○○○	
0-6-4	◿ ○○○○○	*Forney 6-Coupled.*
0-6-6	◿ ○○○○○○	
0-8-0	◿ ○○○○	*8-Wheel Switcher.*
0-8-2	◿ ○○○○○	
0-10-0	◿ ○○○○○	*10-Wheel Switcher.*
2-4-0	◿○ ○○	
2-4-2	◿○ ○○○	*Columbia.*
2-4-4	◿○ ○○○○	
2-4-6	◿○ ○○○○○	
2-6-0	◿○ ○○○	*Mogul.*
2-6-2	◿○ ○○○○	*Prairie.*
2-6-4	◿○ ○○○○○	
2-6-6	◿○ ○○○○○○	
2-8-0	◿○ ○○○○	*Consolidation.*
2-8-2	◿○ ○○○○○	*Mikado.*
2-8-4	◿○ ○○○○○○	
2-8-6	◿○ ○○○○○○○	
2-10-0	◿○ ○○○○○	*Decapod.*
2-10-2	◿○ ○○○○○○	*Santa Fe.*

Fig. 1—Whytes' System of Locomotive Classification.

Symbol.	Wheel Arrangement.	Type.
2-12-0	⊿○ ○○○○○○	*Centipede.*
4-2-2	⊿○○ ○○	*Bicycle.*
4-4-0	⊿○○ ○○	*American.*
4-4-2	⊿○○ ○○○	*Atlantic.*
4-4-4	⊿○○ ○○○○	*Reading.*
4-4-6	⊿○○ ○○○○○	
4-6-0	⊿○○ ○○○	10-*Wheel.*
4-6-2	⊿○○ ○○○○	*Pacific.*
4-6-4	⊿○○ ○○○○○	*Baltic.*
4-6-6	⊿○○ ○○○○○○	
4-8-0	⊿○○ ○○○○	12-*Wheel.*
4-8-2	⊿○○ ○○○○○	*Mountain.*
4-10-0	⊿○○ ○○○○○	*Mastodon.*
0-4-4-0	⊿ ○○ ○○	*Mallet Articulated.*
0-6-6-0	⊿ ○○○ ○○○	*Mallet Articulated.*
0-8-8-0	⊿ ○○○○ ○○○○	*Mallet Articulated.*
2-4-4-0	⊿○ ○○ ○○	*Mallet Articulated.*
2-6-6-0	⊿○ ○○○ ○○○	*Mallet Articulated.*
2-6-8-0	⊿○ ○○○ ○○○○	*Mallet Articulated.*
2-8-8-0	⊿○ ○○○○ ○○○○	*Mallet Articulated.*
2-4-4-2	⊿○ ○○ ○○○	*Mallet Articulated.*
2-6-6-2	⊿○ ○○○ ○○○○	*Mallet Articulated.*
2-8-8-2	⊿○ ○○○○ ○○○○○	*Mallet Articulated.*
2-10-10-2	⊿○ ○○○○○ ○○○○○○	*Mallet Articulated.*
2-8-8-8-2	⊿○ ○○○○ ○○○○ ○○○○○	*Mallet Artic. (Triplex).*
4-4-6-2	⊿○○ ○○ ○○○○	*Mallet Articulated.*

Fig. 2—Whytes' System of Locomotive Classification.

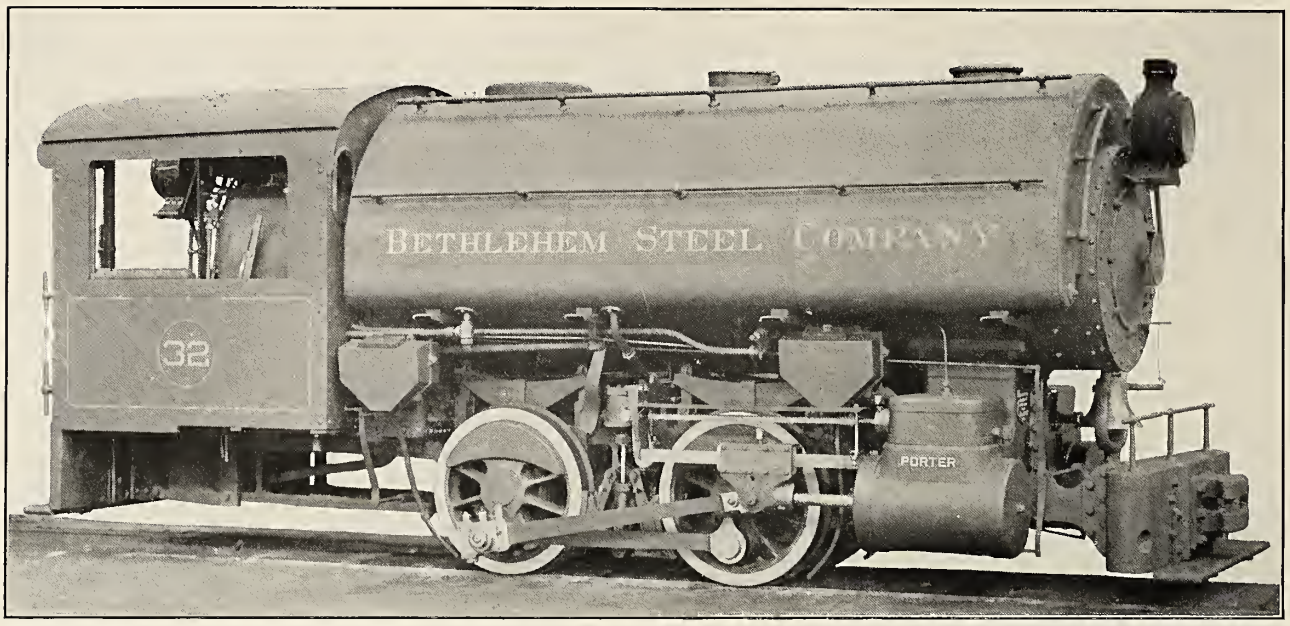

Fig. 3—Four-Wheel (0-4-0) Saddle Tank Locomotive for Switching Service. Built for the Bethlehem Steel Company by the H. K. Porter Company. Cylinders, 15 in. x 20 in. Working Steam Pressure, 170 lbs. per sq. in. Diameter of Drivers, 40 in. Tractive Effort, 16,260 lbs. Heating Surface—Tubes, 730.8 sq. ft.; Firebox, 76.8 sq. ft.; Total, 807.6 sq. ft. Grate Area, 14.08 sq. ft. Rigid Wheel Base, 5 ft. Total Engine Wheel Base, 5 ft. Weight on Drivers, 81,500 lbs. Total Weight of Engine, 81,500 lbs. Fuel, Soft Coal.

Fig. 4—Four-Wheel (0-4-0) Saddle Tank Locomotive for Switching Service. Built for the Hardaway Contracting Company by the American Locomotive Company. Cylinders, 14 in. x 22 in. Steam Pressure, 180 lbs. Diameter of Drivers, 40 in. Tractive Effort, 16,493 lbs. Heating Surface—Tubes, 643 sq. ft.; Firebox, 53 sq. ft.; Total 696 sq. ft. Grate Area, 14.2 sq. ft. Rigid Wheel Base, 7 ft. Total Weight of Engine, 76,560 lbs. Fuel, Soft Coal.

Boiler, Diameter	43⅞ in.	Tubes, Diameter	2 in.
Firebox, Length	46 3/16 in.	Tubes, Length	11 ft. 8 in.
Firebox, Width	44⅛ in.	Tank Capacity, Water	1700 gal.
Tubes, Number	106	Fuel Capacity, Coal	1600 lbs.

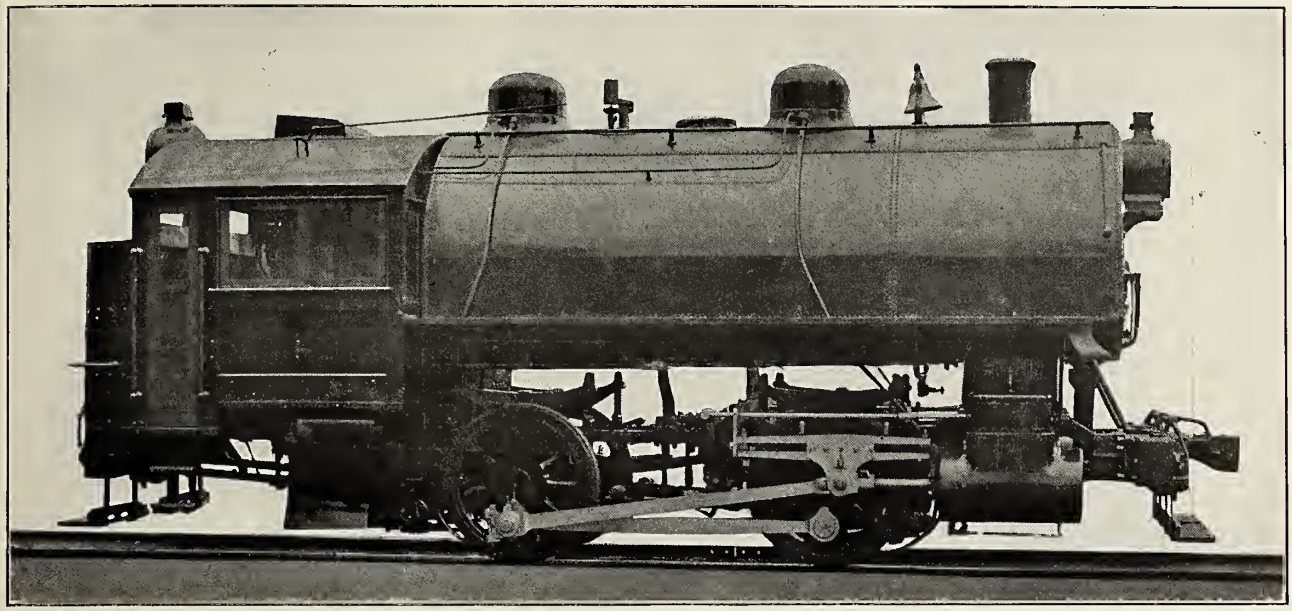

Fig. 5—Four-Wheel (0-4-0) Saddle Tank Locomotive for Switching Service. Built for the Andrews Steel Co. by the Lima Locomotive Corporation. Cylinders, 17 in. x 24 in. Working Steam Pressure, 180 lbs. per sq. in. Diameter of Drivers, 48 in. Tractive Effort, 22,110 lbs. Heating Surface—Tubes, 1,079 sq. ft.; Firebox, 88 sq. ft.; Total, 1,167 sq. ft. Grate Area, 14 sq. ft. Rigid Wheel Base, 8 ft. Total Engine Wheel Base, 8 ft. Weight on Drivers, 102,800 lbs. Total Weight of Engine, 102,800 lbs. Fuel, Soft Coal.

Boiler, Diameter	51¾ in.
Firebox, Length	60 in.
Firebox, Width	34 in.
Tubes, Number	166
Tubes, Diameter	2 in.
Tubes, Length	12 ft. 6¾ in.
Weight on Drivers ÷ Tractive Effort	4.64
Tractive Effort × Diam. Drivers ÷ Heating Surface	908.80
Total Heating Surface ÷ Grate Area	83.40
Firebox Heating Surface ÷ Total Heating Surface, per cent	7.50
Total Weight ÷ Total Heating Surface	88.30
Volume both Cylinders, cu. ft	6.34
Total Heating Surface ÷ Vol. Cylinders	184.17
Grate Area ÷ Vol. Cylinders	2.20
Tank Capacity, Water	2,000 gals.
Fuel Capacity, Coal	2 tons

(*See Fig.* 101 *for general drawing.*)

Fig. 6—Four-Wheel (0-4-0) Saddle Tank Locomotive for Switching Service. Built for the E. B. & A. L. Stone Company by the Vulcan Iron Works. Cylinders, 11 in. x 16 in. Working Steam Pressure, 165 lbs. per sq. in. Diameter, of Drivers, 30 in. Tractive Effort, 8,075 lbs. Heating Surface—Tubes, 336 sq. ft.; Firebox, 48 sq. ft.; Total, 384 sq. ft. Grate Area, 8.64 sq. ft. Rigid Wheel Base, 5 ft. Total Engine Wheel Base, 5 ft. Weight on Drivers, 40,000 lbs. Total Weight of Engine, 40,000 lbs. Fuel, Oil.

Fig. 7—Four-Wheel (0-4-0) Switcher. Built for Atlantic Coast Line by Baldwin Loco. Works. Cylinders, 17 in. x 24 in. Steam Pressure, 180 lbs. Diameter of Drivers, 44 in. Tractive Effort, 24,120 lbs. Heating Surface—Tubes, 718 sq. ft.; Firebox, 80.1 sq. ft.; Total, 798.1 sq. ft. Grate Area, 20.2 sq. ft. Rigid Wheel Base, 6 ft. 6 in. Total Weight of Engine, 95,380 lbs. Fuel, Soft Coal.

Fig. 8—Four-Coupled (0-4-2) Saddle Tank Locomotive with Trailing Truck for Contractors' Service. Built for Henry Steers, Inc. by the American Locomotive Company. Cylinders, 14 in. x 22 in. Working Steam Pressure, 165 lbs. per sq. in. Diameter of Drivers, 44 in. Tractive Effort, 13,744 lbs. Heating Surface—Tubes, 643 sq. ft.; Firebox, 54 sq. ft.; Total, 697 sq. ft. Grate Area, 14.2 sq. ft. Rigid Wheel Base, 7 ft. Total Engine Wheel Base, 14 ft. 7 in. Weight on Drivers, 67,000 lbs. Total Weight of Engine, 78,000 lbs. Fuel, Soft Coal.

Boiler, Diameter	43¾ in.	Tubes, Diameter	2 in.
Firebox, Length	46 3/16 in.	Tubes, Length	11 ft. 8 in.
Firebox, Width	44⅜ in.	Tank Capacity, Water	1,160 gals.
Tubes, Number	106	Tender Capacity, Coal	2 tons

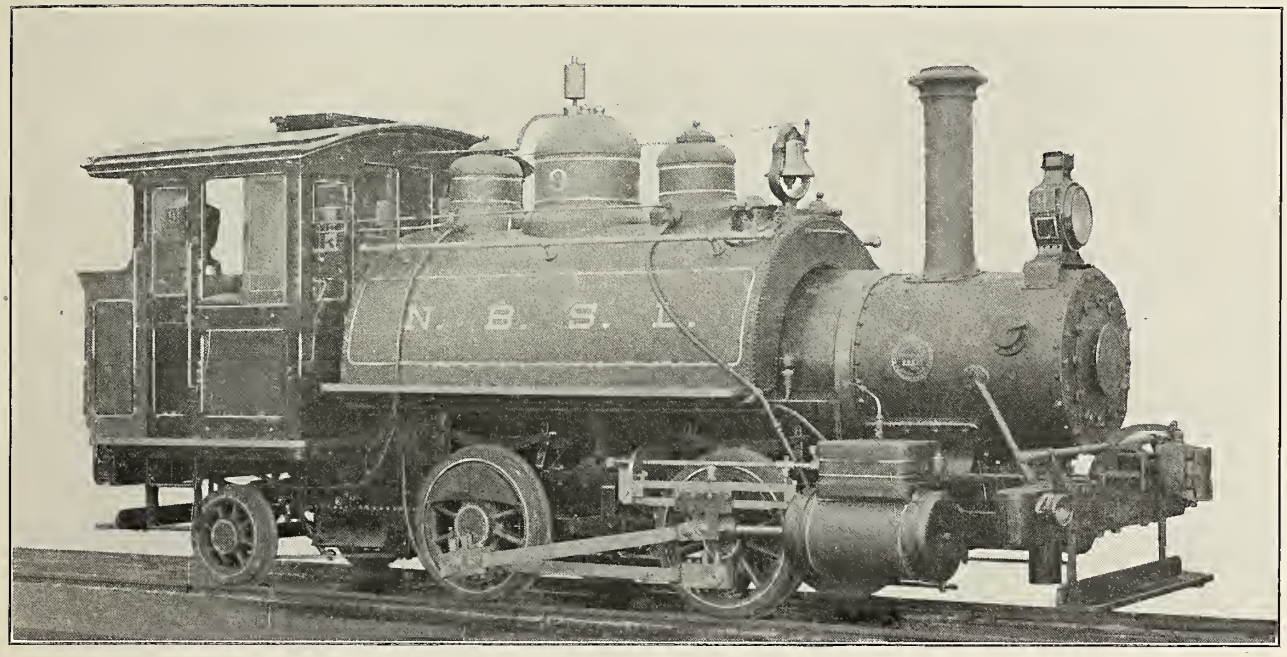

Fig. 9—Four-Coupled (0-4-2) Saddle Tank Locomotive with Trailing Truck for Switching Service. Built for the Singer Manufacturing Co. by the Baldwin Locomotive Works. Cylinders, 13 in. x 18 in. Working Steam Pressure, 160 lbs. per sq. in. Diameter of Drivers, 38 in. Tractive Effort, 10,880 lbs. Heating Surface—Tubes, 473.8 sq. ft.; Firebox, 46 sq. ft.; Total, 519.8 sq. ft. Grate Area, 9.7 sq. ft. Rigid Wheel Base, 6 ft. Total Engine Wheel Base, 13 ft. Weight on Drivers, 48,100 lbs. Total Weight of Engine, 53,100 lbs. Fuel, Hard Coal.

Boiler, Diameter	40 in.
Firebox, Length	40¾ in.
Firebox, Width	34⅜ in.
Tubes, Number	106
Tubes, Diameter	1¾ in.
Tubes, Length	9 ft. 10 in.
Weight on Drivers ÷ Tractive Effort	4.43
Total Weight ÷ Tractive Effort	4.90
Tractive Effort × Diam. Drivers ÷ Heating Surface	797.00
Total Heating Surface ÷ Grate Area	53.4
Firebox Heating Surface ÷ Total Heating Surface, per cent.	8.85
Weight on Drivers ÷ Total Heating Surface	92.60
Total Weight ÷ Total Heating Surface	102.00
Volume both Cylinders, cu. ft	2.78
Total Heating Surface ÷ Vol. Cylinders	186.90
Grate Area ÷ Vol. Cylinders	3.48
Tank Capacity, Water	600 gals.
Tender Capacity, Coal	1 ton

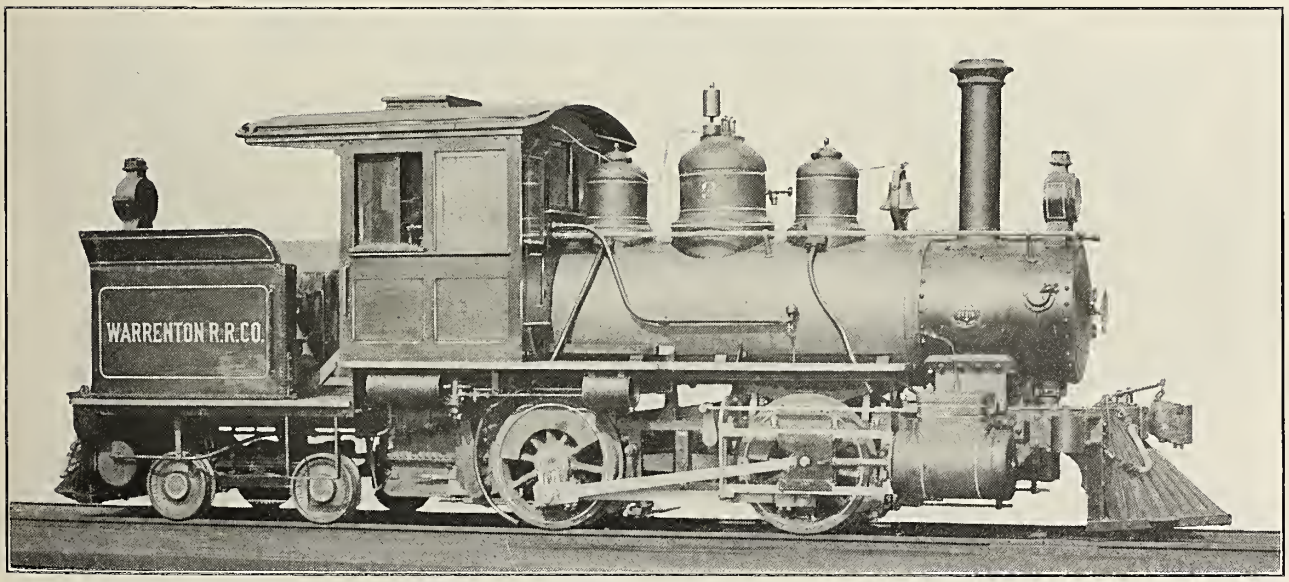

Fig. 10—Forney Four-Coupled (0-4-4) Locomotive with Four-Wheel Trailing Truck for Passenger and Freight Service. Built for the Warrenton by the Baldwin Locomotive Works. Cylinders, 13 in. x 18 in. Working Steam Pressure, 160 lbs. per. sq. in. Diameter of Drivers, 40 in. Tractive Effort, 10,320 lbs. Heating Surface—Tubes, 464.6 sq. ft.; Firebox, 50.2 sq. ft.; Total, 514.8 sq. ft. Grate Area, 10.3 sq. ft. Rigid Wheel Base, 6 ft. 6 in. Total Engine Wheel Base, 17 ft. 4 in. Weight on Drivers, 48,300 lbs. Total Weight of Engine, 67,500 lbs. Fuel, Soft Coal.

Fig. 11—Six-Wheel (0-6-0) Saddle Tank Locomotive for Switching Service. Built for M. A. Hanna & Co. by the American Locomotive Company. Cylinders, 17 in. x 24 in. Working Steam Pressure, 170 lbs. per sq. in. Diameter of Drivers, 44 in. Tractive Effort, 22,770 lbs. Heating Surface—Tubes, 1,030 sq. ft.; Firebox, 85 sq. ft.; Total, 1,115 sq. ft. Grate Area, 20.6 sq. ft. Rigid Wheel Base, 10 ft. Total Engine Wheel Base, 10 ft. Weight on Drivers, 108,600 lbs. Total Weight of Engine, 108,600 lbs. Fuel, Soft Coal.

Boiler, Diameter	51 in.	Tubes, Diameter	2 in.
Firebox, Length	72 3/16 in.	Tubes, Length	12 ft. 1 in.
Firebox, Width	41¼ in.	Tank Capacity, Water	1,200 gals.
Tubes, Number	164	Tender Capacity, Coal	1½ tons

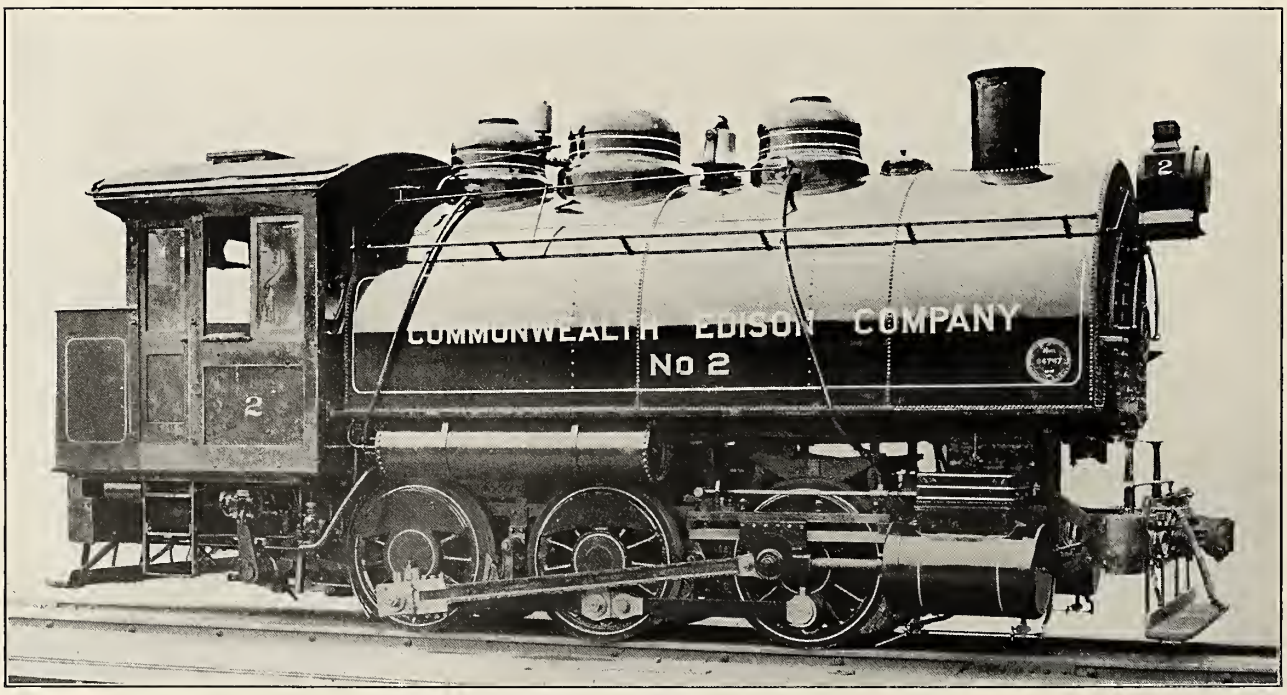

Fig. 12—Six-Wheel (0-6-0) Saddle Tank Locomotive for Switching Service. Built for the Commonwealth Edison Co. by the Baldwin Locomotive Works. Cylinders, 20 in. x 26 in. Working Steam Pressure, 180 lbs. per sq. in. Diameter of Drivers, 50 in. Tractive Effort, 31,860 lbs. Heating Surface—Tubes, 1,106 sq. ft.; Firebox, 119 sq. ft.; Total, 1,225 sq. ft. Grate Area, 25.2 sq. ft. Rigid Wheel Base, 10 ft. 10 in. Total Engine Wheel Base, 10 ft. 10 in. Weight on Drivers, 148,000 lbs. Total Weight of Engine, 148,000 lbs. Fuel, Soft Coal.

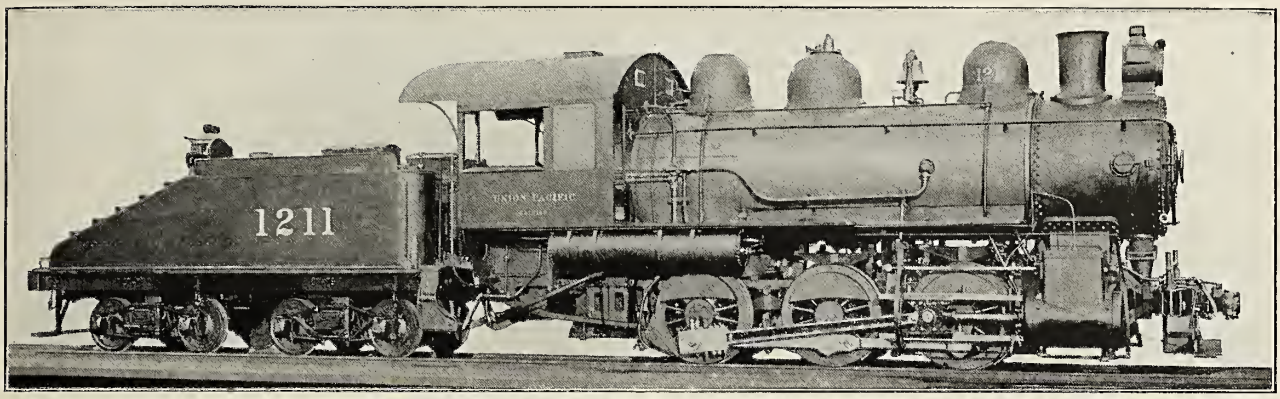

Fig. 13—Six-Wheel (0-6-0) Locomotive for Switching Service. Built for the Union Pacific by the Baldwin Locomotive Works. Cylinders, 19 in. x 26 in. Working Steam Pressure, 175 lbs. per sq. in. Diameter of Drivers, 51 in. Tractive Effort, 27,475 lbs. Heating Surface—Tubes, 1,416.7 sq. ft.; Firebox, 146.3 sq. ft.; Total, 1,563 sq. ft. Grate Area, 30.2 sq. ft. Rigid Wheel Base, 11 ft. Total Weight of Engine, 142,800 lbs. Fuel, Soft Coal.

Fig. 14—Six-Wheel (0-6-0) Locomotive for Switching Service. Built for the Illinois Central by the American Locomotive Co. Cylinders, 21 in. x 26 in. Steam Pressure, 170 lbs. Dia. Drivers, 51 in. Tractive Effort, 32,450 lbs. Heating Surface—Tubes, 1,409 square ft.; Firebox, 150.5 sq. ft.; Total, 1,559.5 sq. ft.; Sup. Sur., 266.6 sq. ft. Grate Area, 38.8 sq. ft. Rigid Wheel Base, 11 ft. 8 in. Total Weight of Engine, 166,000 lbs. Fuel, Soft Coal.

(*See Fig.* 102 *for General Drawing.*)

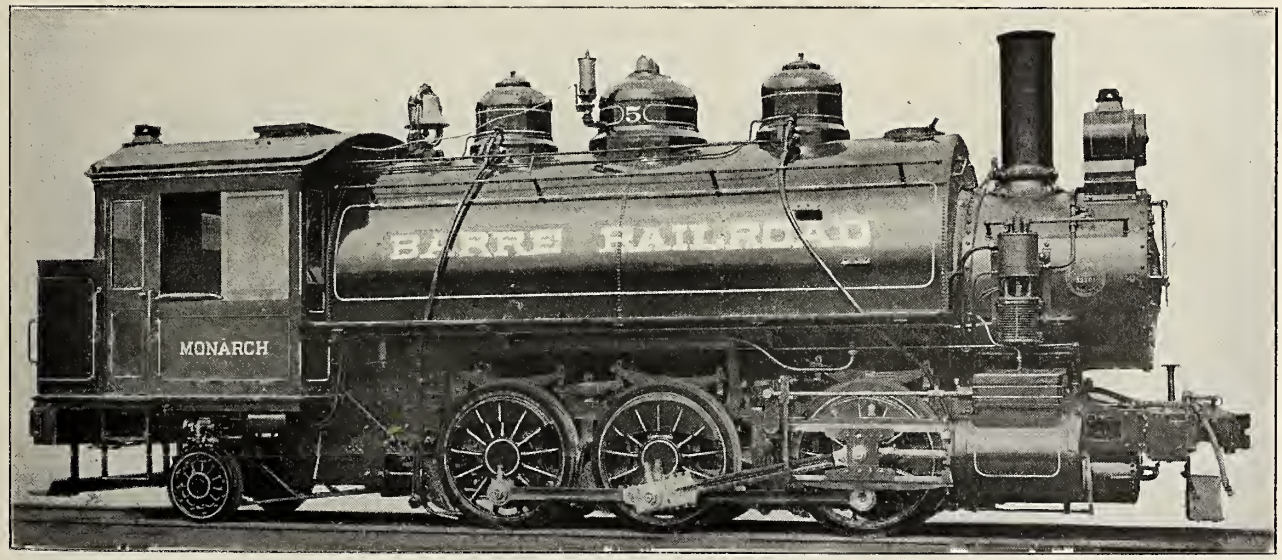

Fig. 15—Six-Coupled (0-6-2) Saddle Tank Locomotive for Pass. and Frt. Service. Built for the Barre Railroad by the Baldwin Locomotive Works. Cyls., 19 in. x 24 in. Steam Pres., 180 lbs. Dia. Drivers, 51 in. Tractive Effort, 25,900 lbs. Heat. Sur.—Tubes, 1,450 sq. ft.; Firebox, 114 sq. ft.; Total, 1,564 sq. ft. Grate Area, 18 sq. ft. Rigid Wheel Base, 10 ft. 6 in. Total Eng. Wheel Base, 20 ft. 6 in. Wt. on Drivers, 130,400 lbs. Total Wt. of Eng., 142,550 lbs. Fuel, Soft Coal.

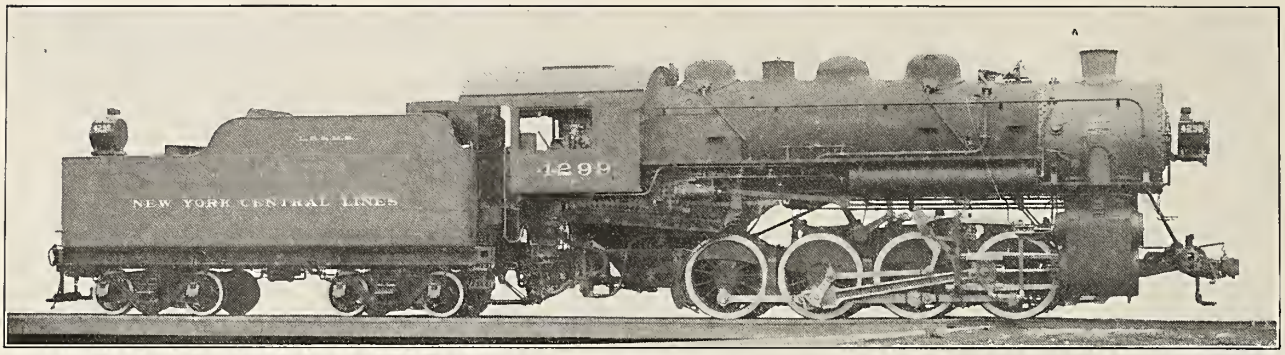

Fig. 16—Eight-Wheel (0-8-0) Switcher. Built for the Lake Shore & Michigan Southern by the American Locomotive Company. Cylinders, 25 in. x 30 in. Steam Pressure, 180 lbs. Diameter of Drivers, 58 in. Tractive Effort, 49,500 lbs. Heating Surface—Tubes, 2,547 sq. ft.; Firebox, 204 sq. ft.; Total, 2,751 sq. ft.; Superheater Surface, 579 sq. ft. Grate Area, 53.3 sq. ft. Rigid Wheel Base, 16 ft. Total Weight of Engine, 239,500 lbs. Fuel, Soft Coal.

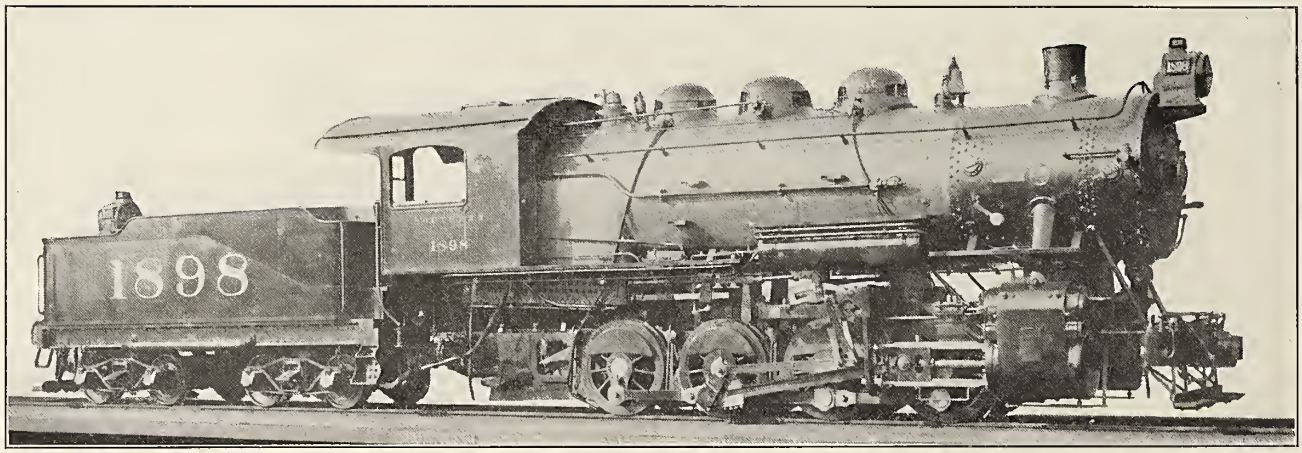

Fig. 17—Eight-Wheel (0-8-0) Switcher. Built for the Southern Railway by the Baldwin Locomotive Works. Cylinders, 24 in. x 28 in. Steam Pressure, 185 lbs. Diameter of Drivers, 51 in. Tractive Effort, 49,800 lbs. Heating Surface—Tubes, 2,284 sq. ft.; Firebox, 159 sq. ft.; Total, 2,443 sq. ft.; Superheater Surface, 533 sq. ft. Grate Area, 41.7 sq. ft. Rigid Wheel Base, 15 ft. Total Weight of Engine, 208,700 lbs. Fuel, Soft Coal.

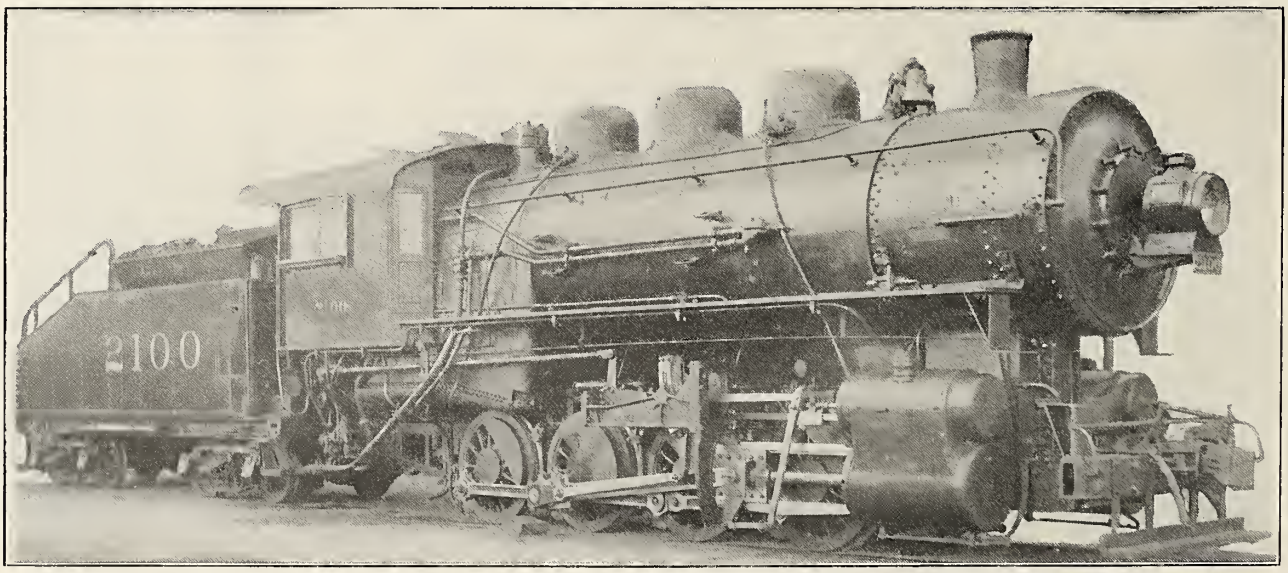

Fig. 18—Eight-Wheel (0-8-0) Switcher. Built by Louisville & Nashville. Cylinders 23½ in. x 30 in. Steam Pressure, 170 lbs. Diameter of Drivers, 51 in. Tractive Effort, 46,900 lbs. Heating Surface—Tubes, 2,157 sq. ft.; Firebox, 222 sq. ft.; Total, 2,379 sq. ft.; Superheater Surface, 525 sq. ft. Grate Area, 53 sq. ft. Rigid Wheel Base, 15 ft. Total Weight of Engine, 219,000 lbs. Fuel, Soft Coal.

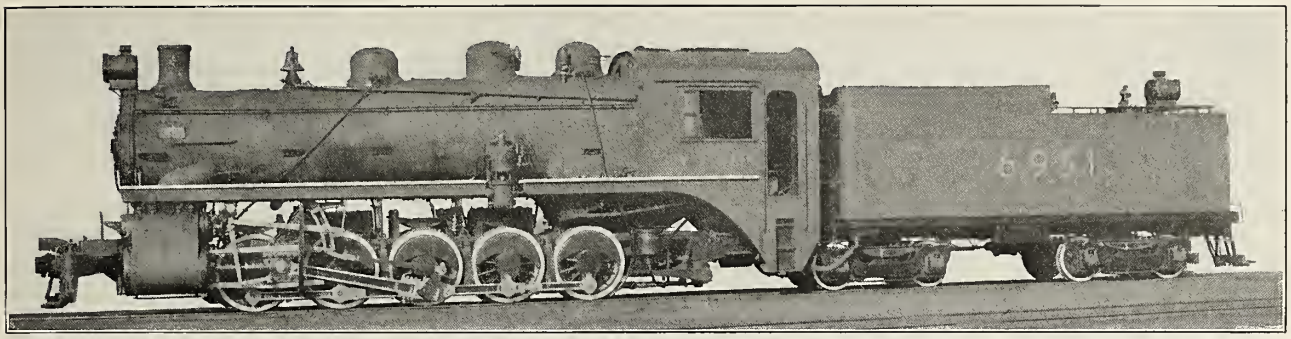

Fig. 19—Ten-Wheel (0-10-0) Locomotive for Switching Service. Built by the Canadian Pacific. Cylinders, 23½ in. x 30 in. Steam Pressure, 200 lbs. Diam. Drivers, 51 in. Tractive Effort, 55,200 lbs. Heating Surface—Tubes, 2,761 sq. ft.; Firebox, 165 sq. ft.; Total, 2,926 sq. ft.; Sup. Sur., 598 sq. ft. Grate Area, 49.5 sq. ft. Wheel Base, 18 ft. 8 in. Total Weight of Engine, 241,000 lbs. Fuel, Soft Coal.

Fig 20—Ten-Wheel (0-10-0) Locomotive for Switching Service. Built for the Chicago, Indiana & Southern by the American Locomotive Company. Cylinders, 24 in. x 28 in. Working Steam Pressure, 210 lbs. per sq. in. Diameter of Drivers, 52 in. Tractive Effort, 55,360 lbs. Heating Surface—Tubes, 4,416 sq. ft.; Firebox, 186.2 sq. ft.; Total, 4,602.2 sq. ft. Grate Area, 55 sq. ft. Rigid Wheel Base, 19 ft. Total Weight of Engine, 274,000 lbs. Fuel, Soft Coal.

(*See Fig.* 105 *for general drawing.*)

Fig. 21—Four-Coupled (2-4-0) Switcher. Built for Vaccaro Brothers by the American Locomotive Co. Cyls., 8 in. x 14 in. Steam Pressure, 145 lbs. Dia. of Drivers, 30 in. Tractive Effort, 3,681 lbs. Total Heating Surface, 204.2 sq. ft. Total Wt. of Engine, 20,950 lbs.

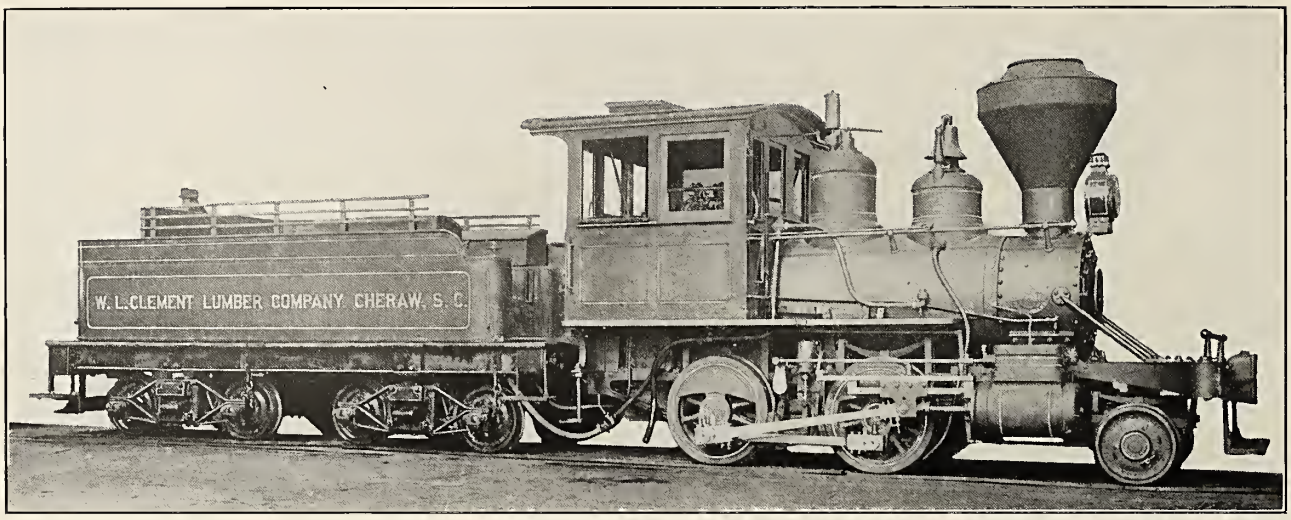

Fig. 22—Four-Coupled (2-4-0) Locomotive. Built for W. L. Clement Lumber Co. by Baldwin Loco. Wks. Cyls., 11 in. x 16 in. Steam Pres., 160 lbs. Dia. Drivers, 37 in. Tractive Effort, 7,116 lbs. Total Heat. Sur., 270.8 sq. ft. Grate Area, 10.7 sq. ft. Rigid Wheel Base, 4 ft. 8 in. Total Eng. Wheel Base, 11 ft. 3 in. Wt. on Drivers, 31,650 lbs. Total Wt. of Eng., 39,150 lbs. Fuel, Wood.

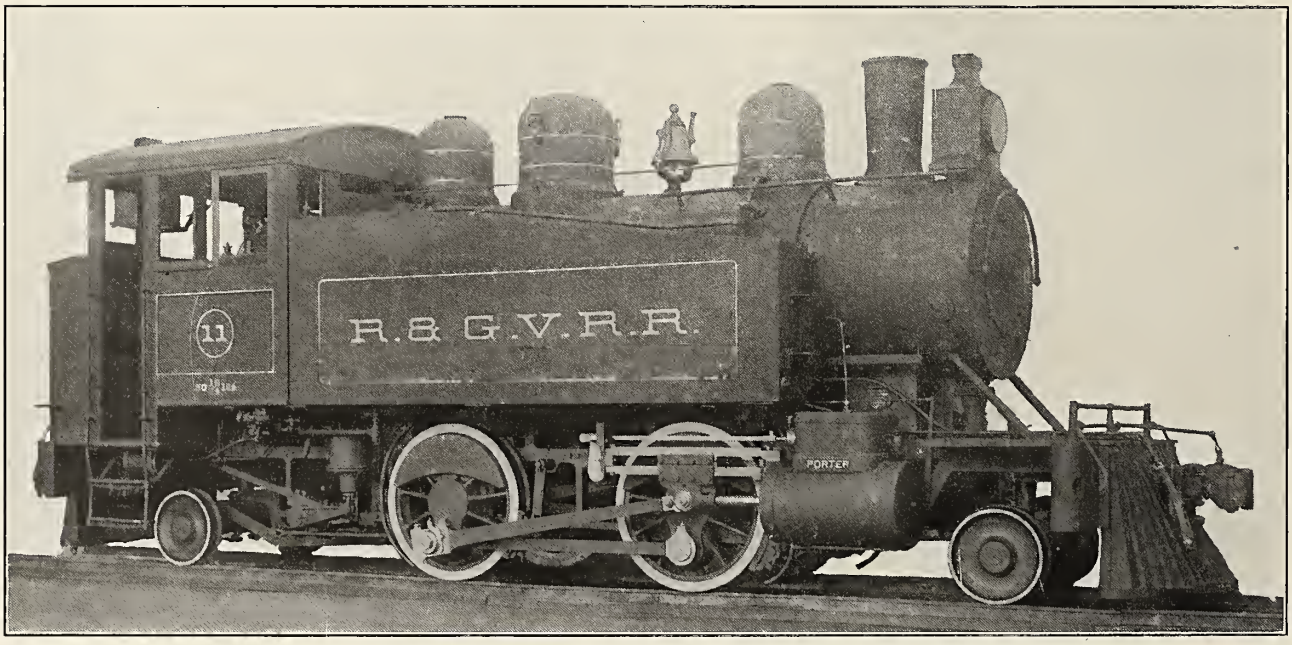

Fig. 23—Four-Coupled Double Ender (2-4-2) Side Tank Locomotive for Switching and Local Service. Built for the Ray Consolidated Copper Co. by the H. K. Porter Company. Cylinders, 16 in. x 24 in. Working Steam Pressure, 180 lbs. per sq. in. Diameter of Drivers, 50 in. Tractive Effort, 18,800 lbs. Heating Surface—Tubes, 1,207.4 sq. ft.; Firebox, 94.6 sq. ft.; Total, 1,302 sq. ft. Grate Area, 19.5 sq. ft. Rigid Wheel Base, 7 ft. Total Engine Wheel Base, 24 ft. Weight on Drivers, 99,300 lbs. Total Weight of Engine, 124,000 lbs. Fuel, Soft Coal.

Boiler, Diameter	57 in.
Firebox, Length	66 in.
Firebox, Width	Bottom, 42½ in., Top, 48 in.
Tubes, Number	202
Tubes, Diameter	2 in.
Tubes, Length	11 ft. 6 in.
Weight on Drivers ÷ Tractive Effort	5.27
Total Weight ÷ Tractive Effort	6.62
Tractive Effort × Diam. Drivers ÷ Heating Surface	722.00
Total Heating Surface ÷ Grate Area	66.80
Firebox Heating Surface ÷ Total Heating Surface, per cent	7.16
Weight on Drivers ÷ Total Heating Surface	76.25
Total Weight ÷ Total Heating Surface	95.50
Volume both Cylinders, cu. ft.	6.87
Total Heating Surface ÷ Vol. Cylinders	189.70
Grate Area ÷ Vol. Cylinders	2.84
Tank Capacity, Water	1,500 gals.
Tender Capacity, Coal	2¼ tons

(*See Fig.* 106 *for general drawing.*)

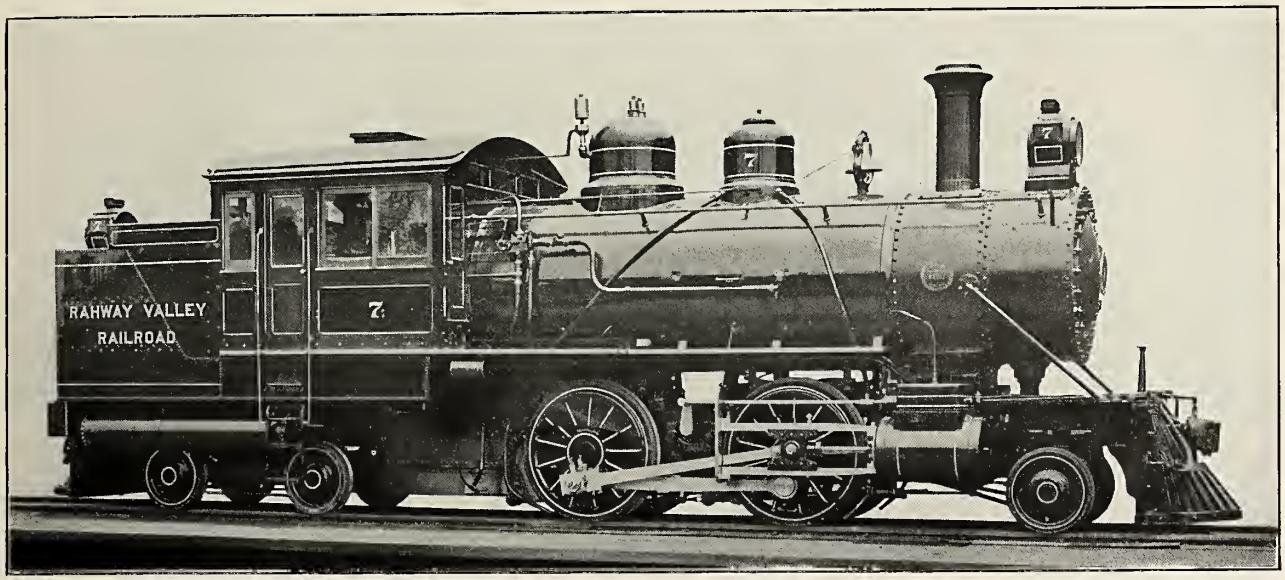

Fig. 24—Four-Coupled Double Ender (2-4-4) Locomotive for Passenger Service. Built for the Rahway Valley by the Baldwin Locomotive Works. Cylinders, 17 in. x 24 in. Working Steam Pressure, 180 lbs. per sq. in. Diameter of Drivers, 56 in. Tractive Effort, 18,990 lbs. Heating Surface—Tubes, 1,343 sq. ft.; Firebox, 152 sq. ft.; Total, 1,495 sq. ft. Grate Area, 18.2 sq. ft. Rigid Wheel Base, 7 ft. Total Engine Wheel Base, 31 ft. 4 in. Weight on Drivers, 74,700 lbs. Total Weight of Engine, 150,300 lbs. Fuel, Soft Coal.

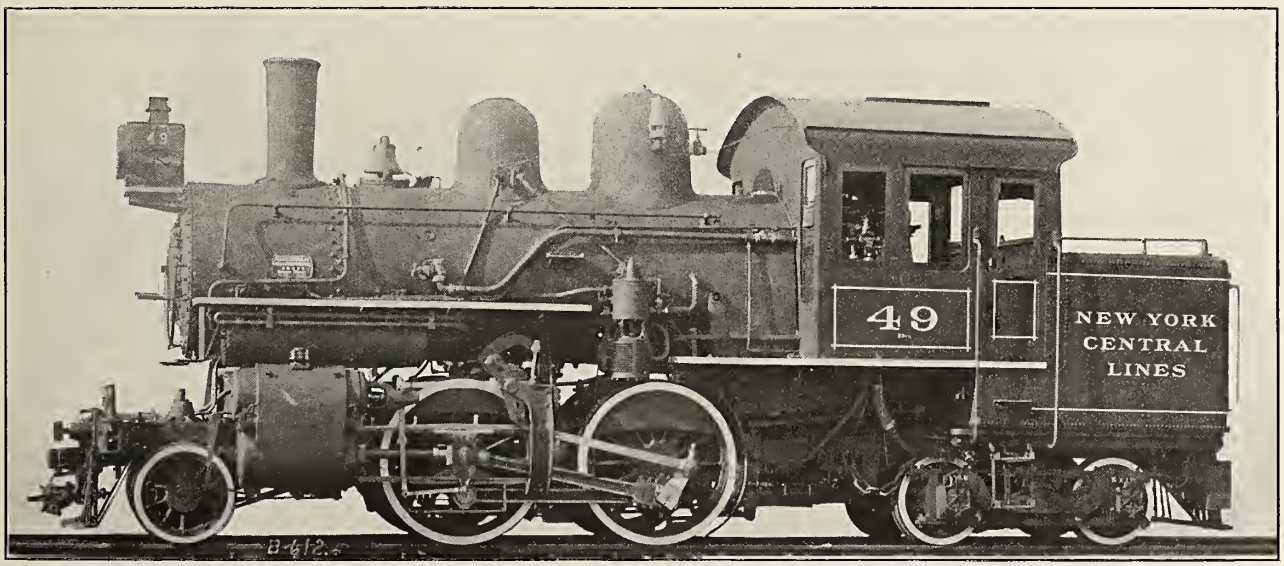

Fig. 25—Four-Coupled Double Ender (2-4-4) Locomotive for Suburban Passenger Service. Built for the New York Central & Hudson River by the American Locomotive Company. Cylinders, 16 in. x 22 in. Working Steam Pressure, 160 lbs. per sq. in. Diameter of Drivers, 57 in. Tractive Effort, 13,450 lbs. Heating Surface—Tubes, 1,356 sq. ft.; Firebox, 90 sq. ft.; Total, 1,446 sq. ft. Grate Area, 22.6 sq. ft. Rigid Wheel Base, 5 ft. 9 in. Total Engine Wheel Base, 27 ft. 9 in. Weight on Drivers, 63,900 lbs. Total Weight of Engine, 142,700 lbs. Fuel, Pea Coal.

Boiler, Diameter	58 in.
Firebox, Length	61⅛ in.
Firebox, Width	53¼ in.
Tubes, Number	227
Tubes, Diameter	2 in.
Tubes, Length	11 ft.
Weight on Drivers ÷ Tractive Effort	4.75
Total Weight ÷ Tractive Effort	10.60
Tractive Effort × Diam. Drivers ÷ Heating Surface	531.00
Total Heating Surface ÷ Grate Area	64.00
Firebox Heating Surface ÷ Total Heating Surface, per cent	6.23
Weight on Drivers ÷ Total Heating Surface	44.20
Total Weight ÷ Total Heating Surface	98.80
Volume both Cylinders, cu. ft	5.10
Total Heating Surface ÷ Vol. Cylinders	282.80
Grate Area ÷ Vol. Cylinders	4.44
Weight on Front Truck	23,200 lbs.
Weight on Trailing Truck	55,600 lbs.
Tender Capacity, Water	1,800 gals.
Tender Capacity, Coal	3½ tons

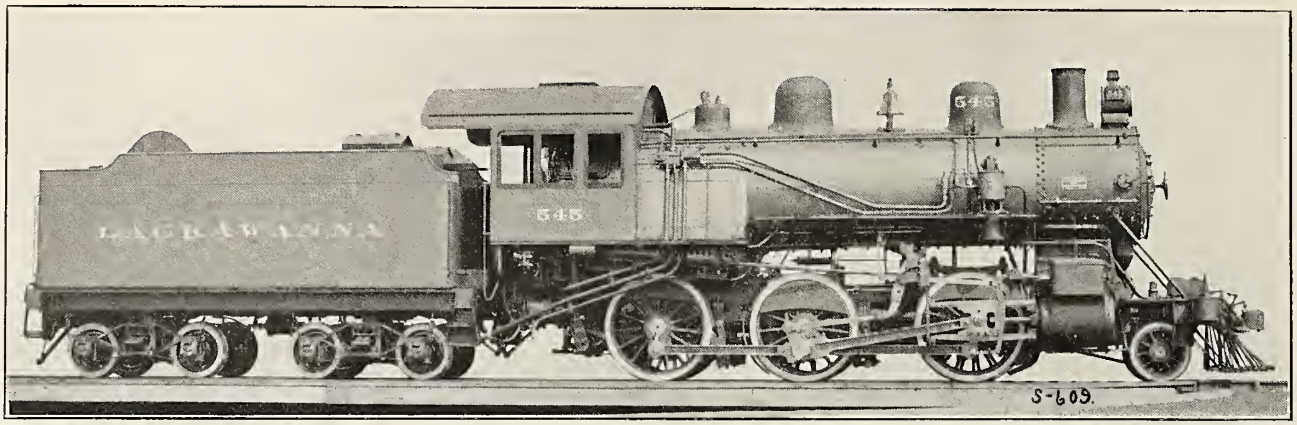

Fig. 26—Mogul (2-6-0) Locomotive for Freight Service. Built for the Lackawanna by the American Locomotive Company. Cylinders, 20½ in. x 26 in. Steam Pres., 200 lbs. Diameter of Drivers, 63 in. Tractive Effort, 29,480 lbs. Heating Surface—Tubes, 2,176 sq. ft.; Firebox, 161 sq. ft.; Total, 2,337 sq. ft. Grate Area, 53.4 sq. ft. Rigid Wheel Base, 15 ft. Total Eng. Wheel Base, 23 ft. 10 in. Wt. on Drivers, 150,500 lbs. Total Wt. of Eng., 171,500 lbs. Fuel, Soft Coal.

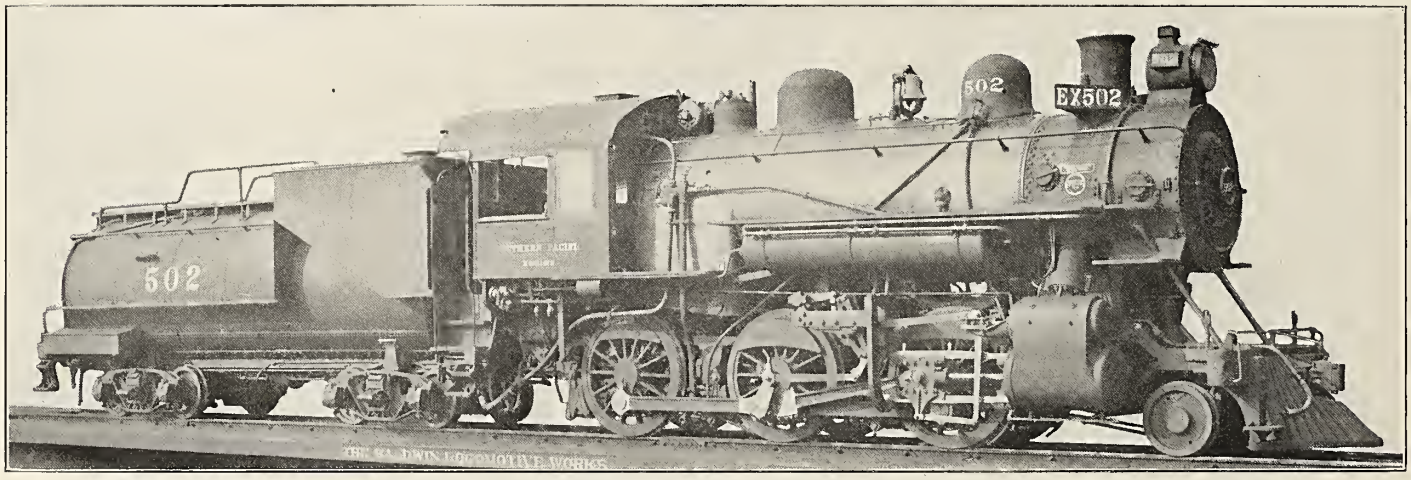

Fig. 27—Mogul (2-6-0) Locomotive for Freight Service. Built for the Southern Pacific by the Baldwin Locomotive Works. Cylinders, 21 in. x 28 in. Steam Pressure, 200 lbs. Dia. Drivers, 63 in. Tractive Effort, 33,300 lbs. Heat. Sur.—Tubes, 1,734 sq. ft.; Firebox, 151 sq. ft.; Total, 1,885 sq. ft.; Superheater Surface, 417 sq. ft. Grate Area, 49.5 sq. ft. Wheel Base—Driving, 15 ft. 2 in.; Total 24 ft. Weight on Drivers, 151,050 lbs. Total Weight of Engine, 179,750 lbs. Fuel, Oil.

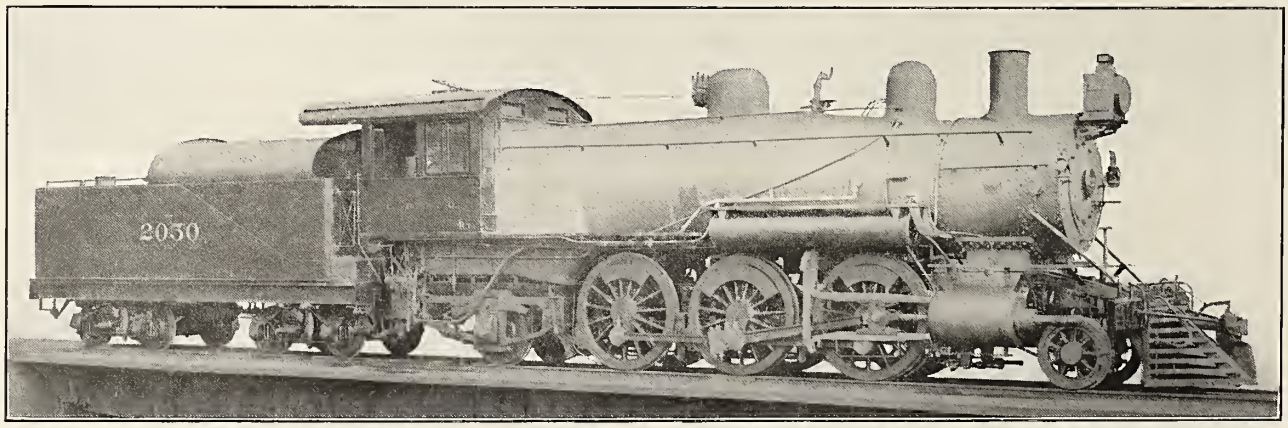

Fig. 28—Prairie Type (2-6-2) Locomotive for Freight Service. Built for Chicago, Burlington & Quincy by the Baldwin Locomotive Works. Cylinders, 22 in. x 28 in. Working Steam Pressure, 210 lbs. per sq. in. Diameter of Drivers, 69 in. Tractive Effort, 35,070 lbs. Heating Surface—Tubes, 3,370 sq. ft.; Firebox, 190 sq. ft.; Total, 3,560 sq. ft. Grate Area, 55 sq. ft. Rigid Wheel Base, 13 ft. 4½ in. Total Engine Wheel Base, 30 ft. 8½ in. Weight on Drivers, 159,540 lbs. Total Weight of Engine, 216,000 lbs. Fuel, Soft Coal.

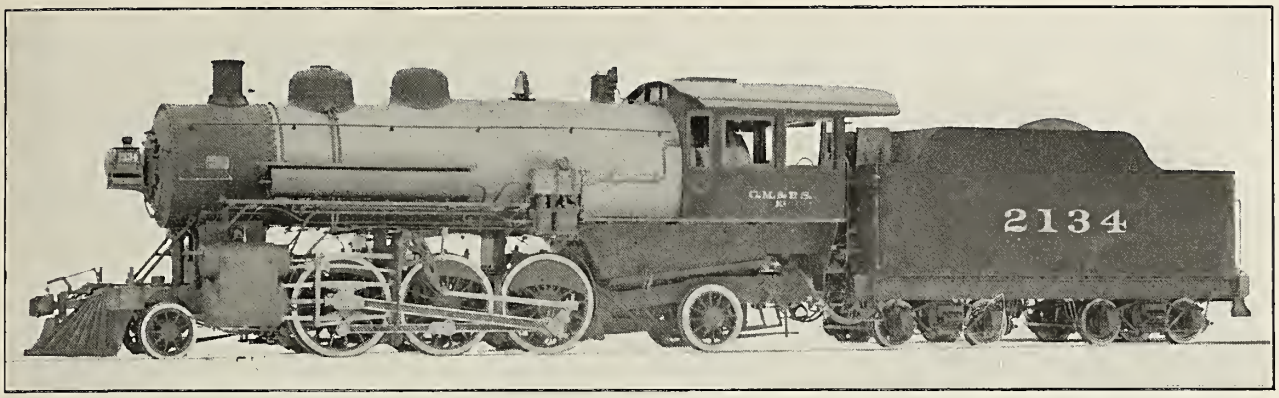

Fig. 29—Prairie Type (2-6-2) Locomotive for Freight Service. Built for Chicago, Milwaukee & St. Paul by the American Locomotive Company. Cylinders, 21 in. x 28 in. Working Steam Pressure, 200 lbs. per sq. in. Diameter of Drivers, 63 in. Tractive Effort, 33,300 lbs. Heating Surface—Tubes, 2,082 sq. ft.; Water Tubes, 29 sq. ft.; Firebox, 256 sq. ft.; Total, 2,367 sq. ft. Grate Area, 44 sq. ft. Rigid Wheel Base, 11 ft. Total Engine Wheel Base, 29 ft. 3 in. Weight on Drivers, 151,500 lbs. Total Weight of Engine, 208,000 lbs. Fuel, Soft Coal.

Boiler, O. S. Diameter of First Ring	72½ in.	Weight on Drivers ÷ Tractive Effort	4.54
Firebox, Length	107 in.	Total Weight ÷ Tractive Effort	6.25
Firebox, Width	59¼ in.	Tractive Effort × Diameter Drivers ÷ Total H. S.	886
Tubes, Number	304	Total Heating Surface ÷ Vol. Cylinders	212
Tubes, Diameter	2 in.	Tank Capacity, Water	8,000 gals.
Tubes, Length	13 ft. 3 in.	Tender Capacity, Coal	14 tons

(*See Fig.* 108 *for general drawing.*)

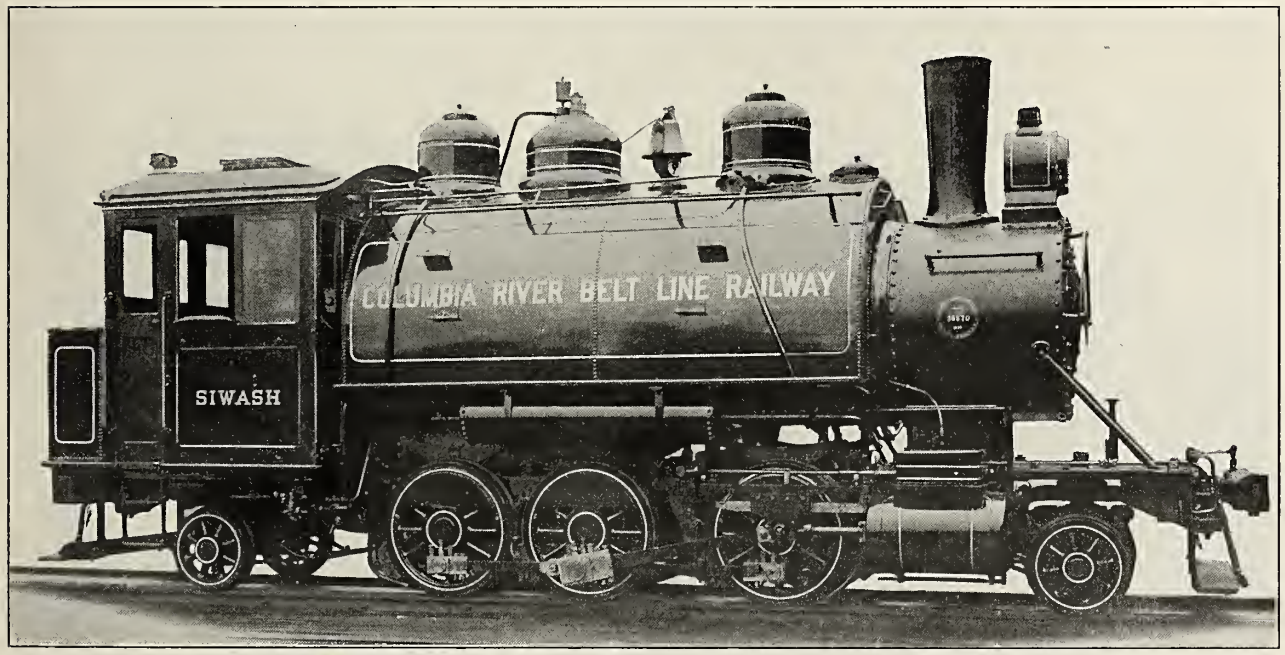

Fig. 30—Six-Coupled Double Ender (2-6-2) Saddle Tank Locomotive for Logging Service. Built for the Columbia River Belt Line by the Baldwin Locomotive Works. Cylinders, 17 in. x 22 in. Working Steam Pressure, 165 lbs. per sq. in. Diameter of Drivers, 44 in. Tractive Effort, 20,295 lbs. Heating Surface—Tubes, 1,189 sq. ft.; Firebox, 93 sq. ft.; Total, 1,282 sq. ft. Grate Area, 14.4 sq. ft. Rigid Wheel Base, 9 ft. Total Engine Wheel Base, 23 ft. 6 in. Weight on Drivers, 85,400 lbs. Total Weight of Engine, 119,600 lbs. Fuel, Oil.

Boiler, Diameter	60 in.	Weight on Drivers ÷ Tractive Effort	4.18
Firebox, Length	66 3/16 in.	Total Weight ÷ Tractive Effort	5.87
Firebox, Width	31⅜ in.	Tractive Effort × Diam. Drivers ÷ Total H. S.	700.00
Tubes, Number	208	Total Heating Surface ÷ Vol. Cylinders	222.00
Tubes, Diameter	2 in.	Tank Capacity, Water	1,200 gals.
Tubes, Length	11 ft.	Tender Capacity, Oil	450 gals.

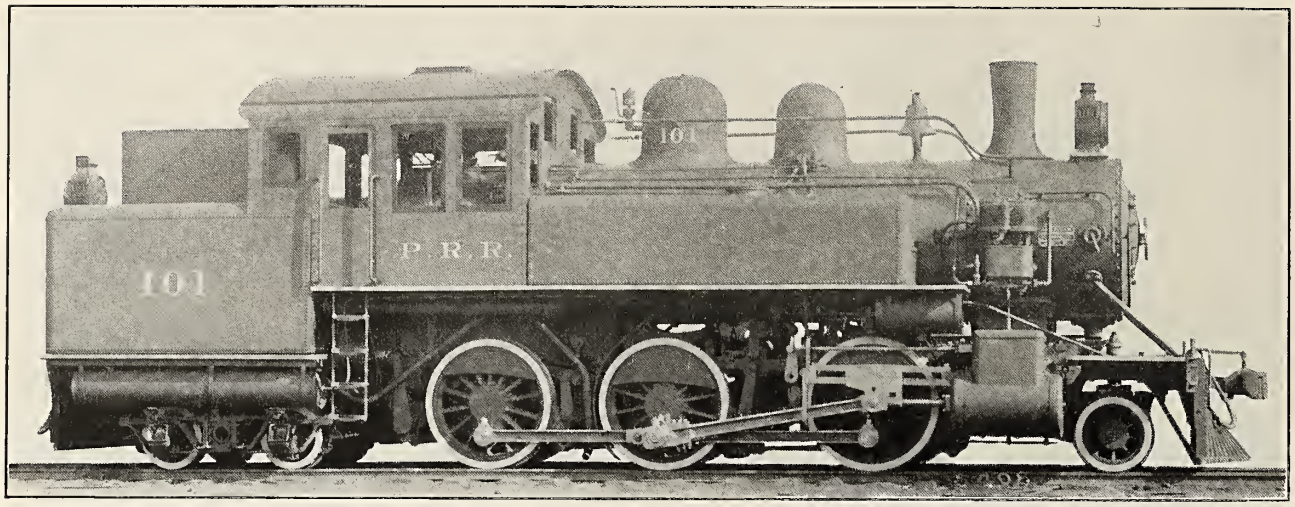

Fig. 31—Six-Coupled Double Ender (2-6-4) Tank Locomotive for Passenger Service. Built for the Panama Railroad by the American Locomotive Company. Cylinders, 19 in. x 26 in. Working Steam Pressure, 180 lbs. per sq. in. Diameter of Drivers, 54 in. Tractive Effort, 26,590 lbs. Heating Surface—Tubes, 1,372.7 sq. ft.; Firebox, 125.1 sq. ft.; Total, 1,497.8 sq. ft. Grate Area, 26.2 sq. ft. Rigid Wheel Base, 13 ft. 2 in. Total Engine Wheel Base, 32 ft. 8 in. Weight on Drivers, 124,000 lbs. Total Weight of Engine, 183,500 lbs. Fuel, Soft Coal.

Boiler, Diameter	62 in.	Weight on Drivers ÷ Tractive Effort	4.66
Firebox, Length	90 in.	Total Weight ÷ Tractive Effort	6.91
Firebox, Width	42 in.	Tractive Effort × Diam. Drivers ÷ H. S.	959.00
Tubes, Number	220	Total Heating Surface ÷ Grate Area	57.20
Tubes, Diameter	2 in.	Tank Capacity, Water	3,700 gals.
Tubes, Length	12 ft.	Tender Capacity, Coal	5 tons

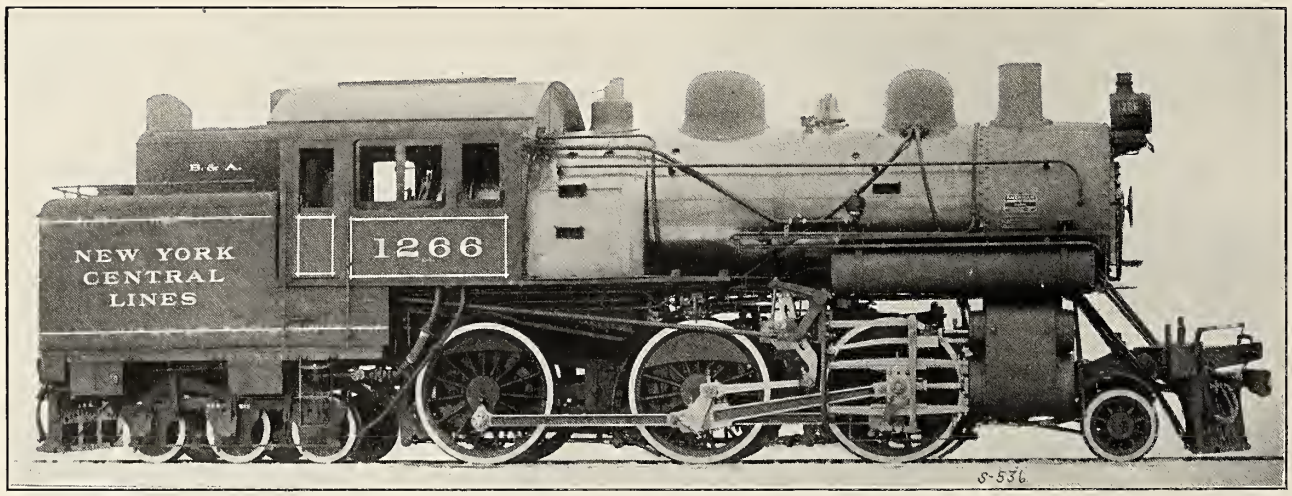

Fig. 32—Six-Coupled Double Ender (2-6-6) Locomotive for Suburban Passenger Service. Built for the Boston & Albany by the American Locomotive Company. Cylinders, 20 in. x 24 in. Working Steam Pressure, 200 lbs. per sq. in. Diameter of Drivers, 63 in. Tractive Effort, 25,900 lbs. Heating Surface—Tubes, 2,275.4 sq. ft.; Firebox, 159.3 sq. ft.; Total, 2,434.7 sq. ft. Grate Area, 56 sq. ft. Rigid Wheel Base, 15 ft. Total Engine Wheel Base, 23 ft. Weight on Drivers, 137,500 lbs. Total Weight of Engine, 229,000 lbs. Fuel, Pea Coal.

Boiler, Diameter	70 in.	Weight on Drivers ÷ Tractive Effort	5.30
Firebox, Length	94 in.	Total Weight ÷ Tractive Effort	8.85
Firebox, Width	86 in.	Tractive Effort × Diam. Drivers ÷ Total H. S.	672.00
Tubes, Number	365	Total Heating Surface ÷ Grate Area	43.50
Tubes, Diameter	2 in.	Tender Capacity, Water	3,850 gals.
Tubes, Length	12 ft.	Tender Capacity, Coal	4 tons

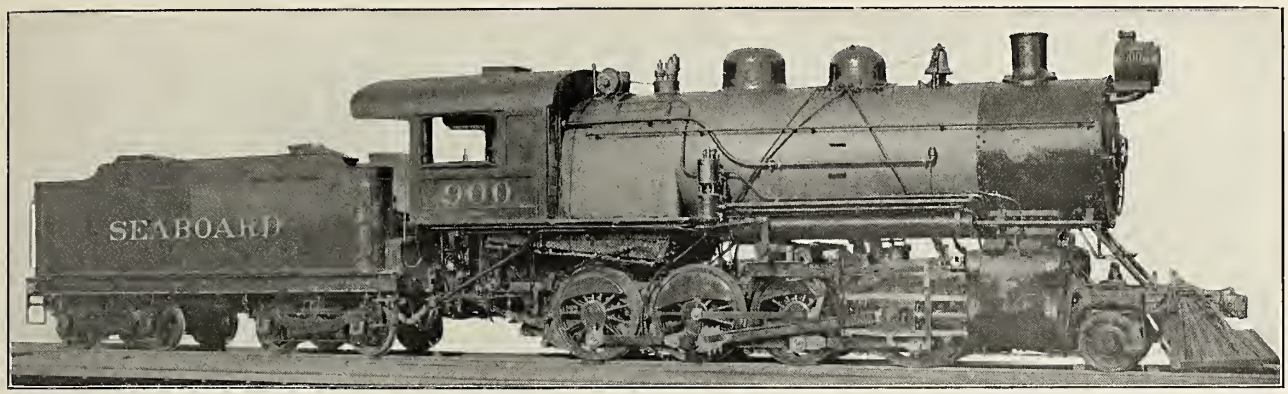

Fig. 33—Consolidation (2-8-0) Locomotive for Freight Service. Built for the Seaboard by the Baldwin Locomotive Works. Cylinders, 23 in. x 30 in. Working Steam Pressure, 195 lbs. per sq. in. Diameter of Drivers, 56 in. Tractive Effort, 47,000 lbs. Heating Surface—Tubes, 3,050 sq. ft.; Firebox, 188 sq. ft.; Total, 3,238 sq. ft. Grate Area, 53.3 sq. ft. Rigid Wheel Base, 16 ft. Total Engine Wheel Base, 24 ft. 6½ in. Weight on Drivers, 188,000 lbs. Total Weight of Engine, 212,000 lbs. Fuel, Soft Coal.

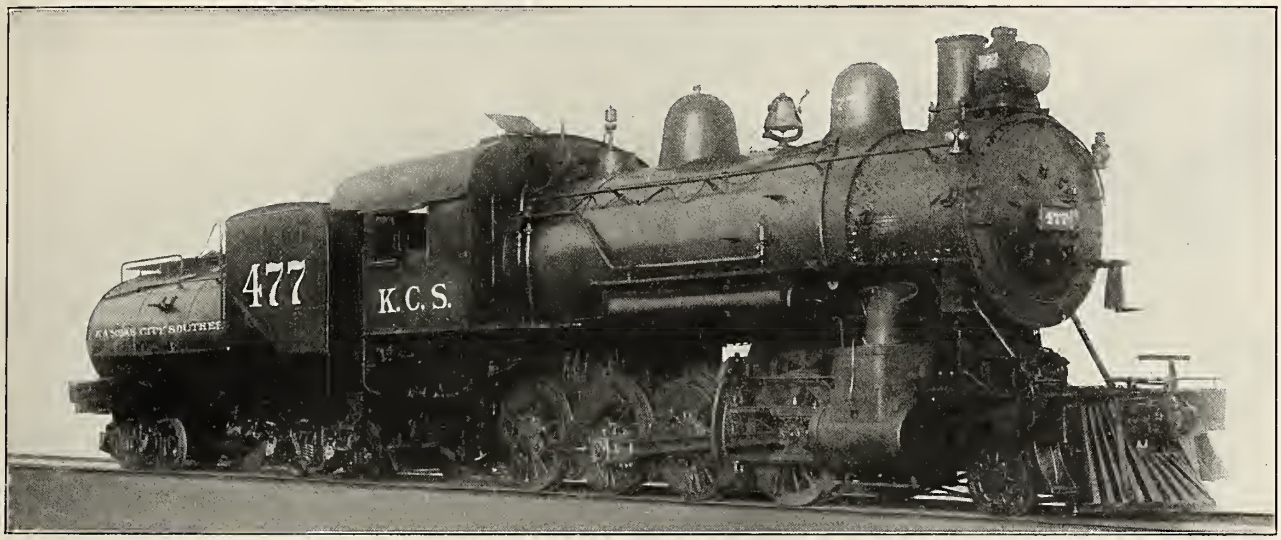

Fig. 34—Consolidation (2-8-0) Locomotive for Freight Service. Built by the American Locomotive Company and rebuilt by the Kansas City Southern. Cylinders, 22 in. x 30 in. Steam Pressure, 200 lbs. Dia. Drivers, 55 in. Tractive Effort, 44,880 lbs. Heat, Sur.—Tubes, 2,080 sq. ft.; Firebox, 231 sq. ft.; Total, 2,311 sq. ft.; Superheater Surface, 520 sq. ft. Grate Area, 33.5 sq. ft. Rigid Wheel Base, 15 ft. 3 in. Total Engine Wheel Base, 24 ft. 3 in. Weight on Drivers, 186,000 lbs. Total Weight of Engine, 210,000 lbs. Fuel, Soft Coal.

Fig. 35—Consolidation (2-8-0) Locomotive for Freight Service. Built for the Wheeling & Lake Erie by the American Locomotive Company. Cylinders, 26 in. x 30 in. Steam Pressure, 185 lbs. Dia. Drivers, 57 in. Tractive Effort, 55,900 lbs. Heat Sur.—Tubes, 3,293 sq. ft.; Firebox, 223 sq. ft.; Total, 3,516 sq. ft.; Sup. Heat. Surface, 774 sq. ft. Grate Area, 66.7 sq. ft. Rigid Wheel Base, 17 ft. Total Engine Wheel Base, 27 ft. Weight on Drivers, 236,000 lbs. Total Weight of Engine, 266,-500 lbs. Fuel, Soft Coal.

(*See Fig.* 109 *for general drawing.*)

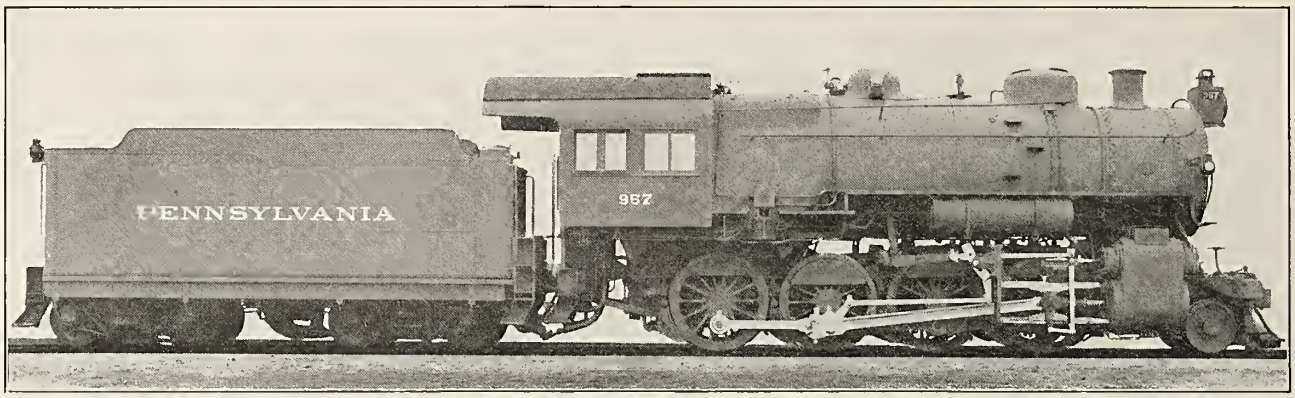

Fig. 36—Consolidation (2-8-0) Locomotive for Freight Service. Built by the Pennsylvania Railroad. Class H8b. Cylinders, 24 in. x 28 in. Working Steam Pressure, 205 lbs. per sq. in. Diameter of Drivers, 62 in. Tractive Effort, 42,661 lbs. Heating Surface—Tubes, 3,652 sq. ft.; Firebox, 187 sq. ft.; Total, 3,839 sq. ft. Grate Area, 55.13 sq. ft. Rigid Wheel Base, 17 ft. ½ in. Total Engine Wheel Base, 27 ft. 9½ in. Wt. on Drivers, 211,000 lbs. Total Wt., 238,300 lbs. Fuel, Soft Coal.

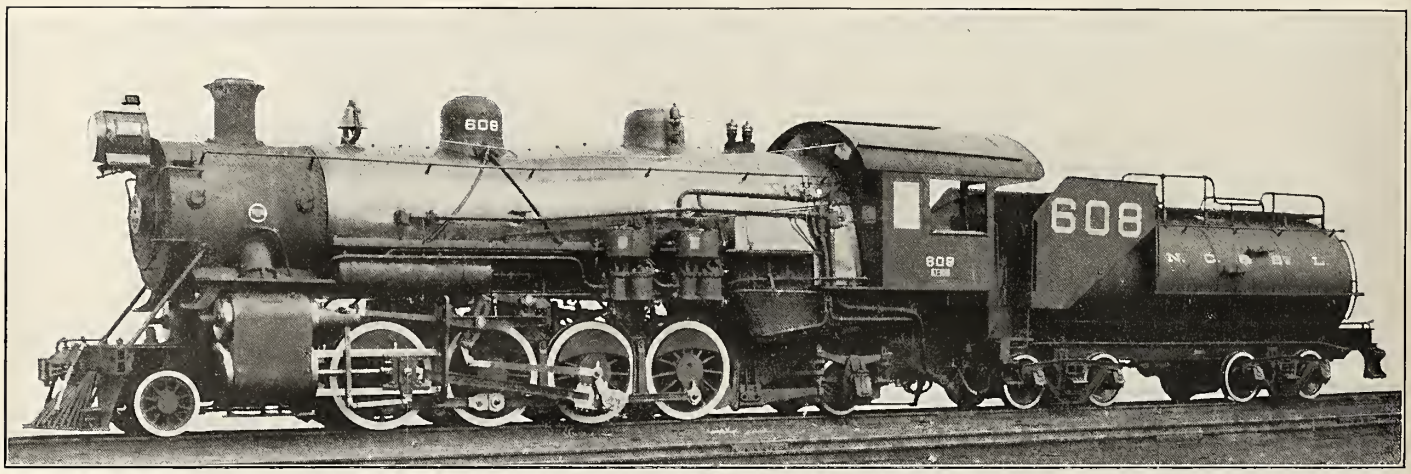

Fig. 37—Mikado (2-8-2) Locomotive for Freight Service. Built for the Nashville, Chattanooga & St. Louis by the Baldwin Locomotive Works. Cylinders, 25 in. x 30 in. Steam Pressure, 180 lbs. Dia. Drivers, 58 in. Tractive Effort, 49,400 lbs. Heat. Sur.—Tubes, 3,553 sq. ft.; Firebox, 251 sq. ft.; Total, 3,804 sq. ft.; Sup. Heat. Sur., 840 sq. ft. Grate Area, 66.6 sq. ft. Wheel Base—Driving, 15 ft 9 in.; Total, 34 ft 4 in. Weight on Drivers, 205,000 lbs. Total Weight of Engine, 264,000 lbs. Fuel, Soft Coal.

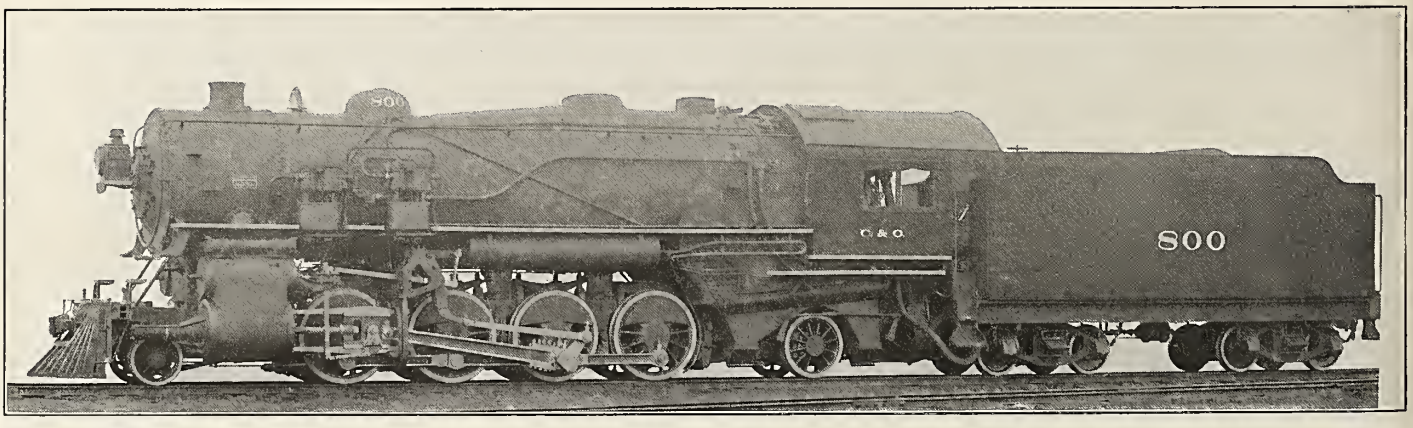

Fig. 38—Mikado (2-8-2) Locomotive for Freight Service. Built for the Chesapeake & Ohio by the American Locomotive Company. Cylinders, 29 in. x 28 in. Working Steam Pressure, 170 lbs. per sq. in. Diameter of Drivers, 56 in. Tractive Effort, 60,800 lbs. Heating Surface—Tubes, 3,740 sq. ft.; Water Tubes, 28 sq. ft.; Firebox, 283 sq. ft.; Total, 4,051 sq. ft.; Superheater Surface, 832 sq. ft. Grate Area, 66.7 sq. ft. Rigid Wheel Base 16 ft. 6 in. Total Engine Wheel Base, 34 ft. 10 in. Wt. on Drivers, 243,000 lbs. Total Wt. of Eng., 315,000 lbs. Fuel, Soft Coal.

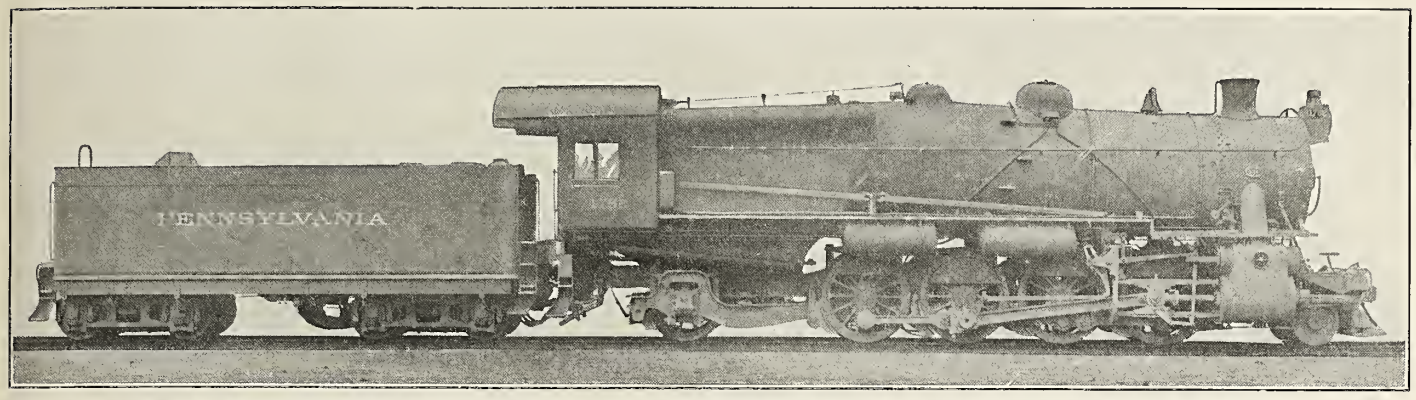

Fig. 39—Mikado (2-8-2) Locomotive for Freight Service. Built by the Pennsylvania Railroad. Cylinders, 27 in. x 30 in. Steam Pressure, 205 lbs. Diameter of Drivers, 62 in. Tractive Effort, 57,850 lbs. Heating Surface—Tubes, 3,746.8 sq. ft.; Firebox, 288.6 sq. ft.; Total, 4,035.4 sq. ft. Grate Area, 70 sq. ft. Wheel Base—Driving, 17 ft. ½ in.; Total, 36 ft. 4½ in. Weight on Drivers, 238,850 lbs. Total Weight of Engine, 319,300 lbs. Fuel, Soft Coal.

Fig. 40—Mikado (2-8-2) Locomotive for Freight Service. Built by the Lima Locomotive Corporation for the Union Pacific. Cylinders, 26 in. x 28 in. Steam Pressure, 200 lbs. Diameter of Drivers, 63 in. Tractive Effort, 51,075 lbs. Heating Surface—Tubes, 3,986 sq. ft.; Firebox, 235 sq. ft.; Total 4,221 sq. ft. Superheater Surface, 865 sq. ft. Grate Area, 70.4 sq. ft. Wheel Base—Driving, 16 ft. 6 in.; Total, 35 ft. 2 in. Weight on Drivers, 210,200 lbs. Total Weight of Engine, 282,000 lbs. Fuel, Soft Coal.

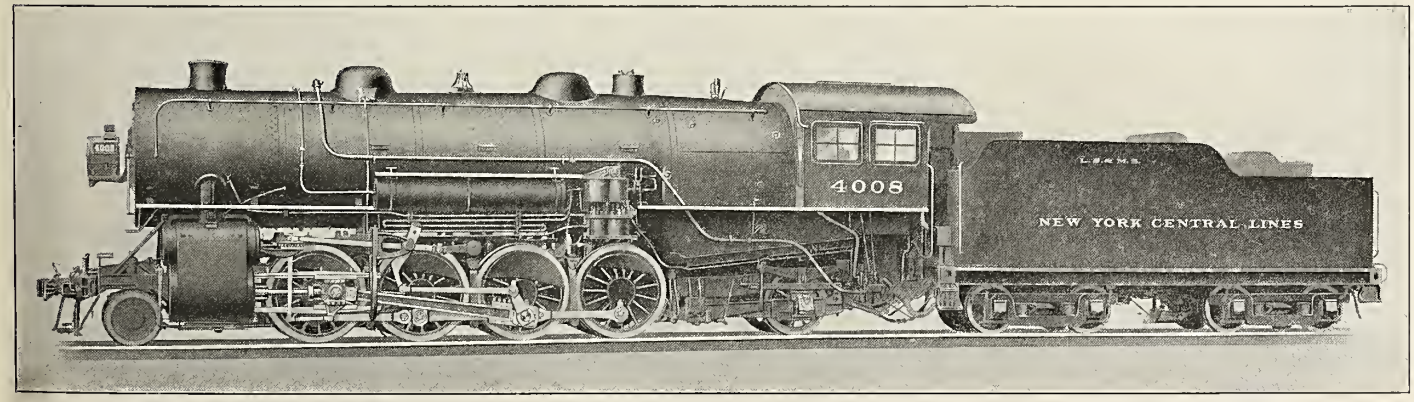

Fig. 41—Mikado (2-8-2) Locomotive for Freight Service. Built by the American Locomotive Company for the Lake Shore & Michigan Southern. Cylinders, 27 in. x 30 in. Steam Pressure, 190 lbs. Diameter of Drivers, 63 in. Tractive Effort, 56,050 lbs. Heating Surface—Tubes, 4,494 sq. ft.; Firebox, 246 sq. ft.; Total, 4,730 sq. ft. Superheater Surface, 1,065 sq. ft. Grate Area, 59.6 sq. ft. Wheel Base—Driving, 16 ft. 6 in; Total, 36 ft. 1 in. Weight on Drivers, 245,000 lbs. Total Weight of Engine, 322,000 lbs. Fuel, Soft Coal.

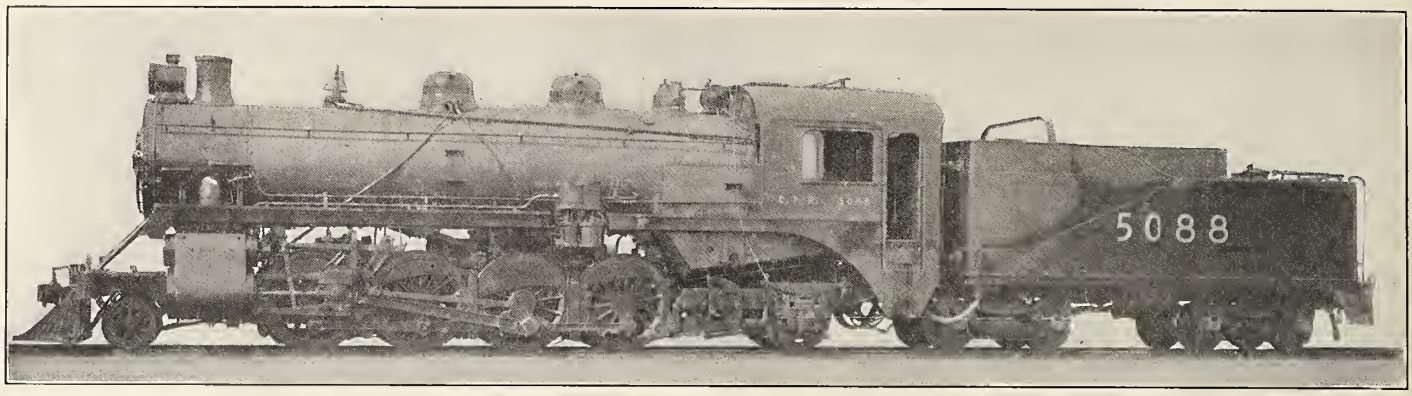

Fig. 42—Mikado (2-8-2) Locomotive for Freight and Passenger Service. Built by the Montreal Locomotive Works for the Canadian Pacific. Cylinders, 23½ in. x 32 in. Steam Pressure, 180 lbs. Diameter of Drivers, 63 in. Tractive Effort, 42,000 lbs. Heating Surface—Tubes, 3,410 sq. ft.; Firebox, 188 sq. ft.; Total, 3,598 sq. ft.; Superheater Surface, 760 sq. ft. Grate Area, 50 sq. ft. Wheel Base—Driving, 16 ft. 6 in.; Total 35 ft. 5 in. Weight on Drivers, 198,000 lbs. Total Weight of Engine, 258,000 lbs. Fuel, Soft Coal.

(*See Fig.* 111 *for general drawing.*)

Fig. 43—Mikado (2-8-2) Locomotive for Freight Service. Built by the Philadelphia & Reading. Cylinders, 24 in. x 32 in. Steam Pressure, 225 lbs. Diameter of Drivers, 61½ in. Tractive Effort, 57,319 lbs. Heating Surface—Tubes, 5,210 sq. ft.; Firebox, 298 sq. ft.; Total, 5,508 sq. ft. Grate Area, 108 sq. ft. Wheel Base—Driving, 16 ft. 6 in.; Total, 35 ft. Weight on Drivers, 249,000 lbs. Total Weight of Engine, 331,000 lbs. Fuel, Anthracite Coal.

(*See Fig.* 112 *for general drawing.*)

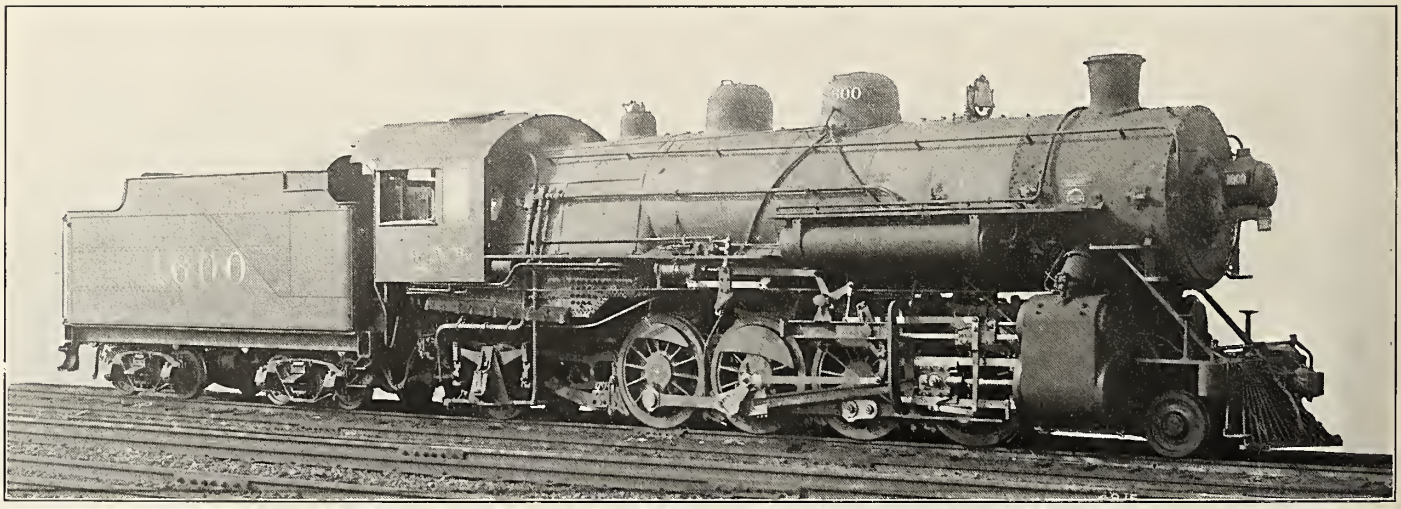

Fig. 44—Mikado (2-8-2) Locomotive for Freight Service. Built for the Illinois Central by the Baldwin Locomotive Works. Cylinders, 27 in. x 30 in. Steam Pressure, 175 lbs. Diameter of Drivers, 63 in. Tractive Effort, 51,700 lbs. Heating Surface—Tubes, 3,412 sq. ft.; Firebox, 254 sq. ft.; Total, 3,666 sq. ft.; Superheater Surafce, 785 sq. ft. Grate Area, 67.5 sq. ft. Wheel Base—Driving, 16 ft. 6 in.; Total 35 ft. 2 in. Weight on Drivers, 217,000 lbs. Total Weight of Engine, 280,000 lbs. Fuel, Soft Coal.

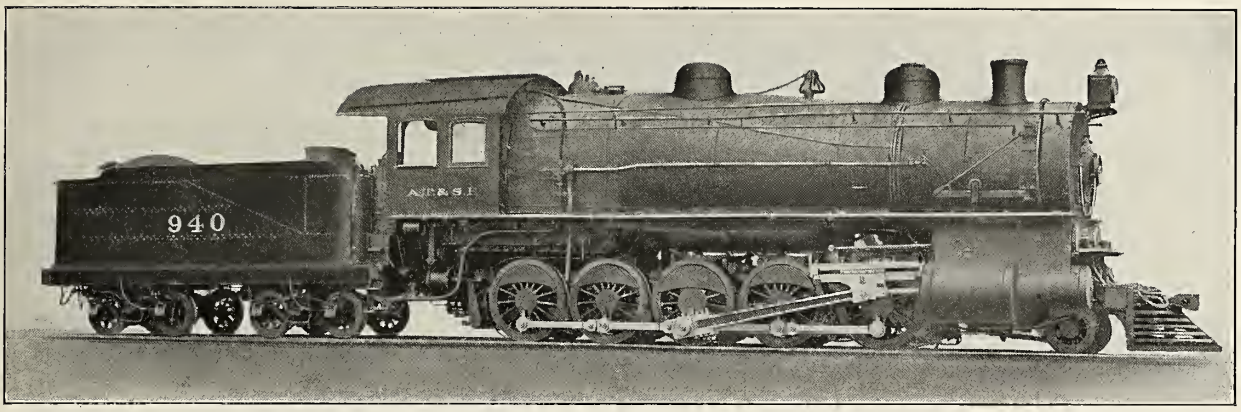

Fig. 45—Decapod (2-10-0) Tandem Compound Freight Locomotive. Built for Atchison, Topeka & Santa Fe by Baldwin Locomotive Works. Cylinders, 19 in. and 32 in. x 32 in. Steam Pressure, 225 lbs. Diameter of Drivers, 57 in. Tractive Effort, 62,700 lbs. Heating Surface—Tubes, 5,156 sq ft.; Firebox, 234 sq. ft.; Total 5,390 sq. ft. Grate Area, 58.5 sq. ft. Rigid Wheel Base, 20 ft. 4 in. Total Engine Wheel Base, 29 ft. 10 in. Weight on Drivers, 237,800 lbs. Total Weight of Engine, 267,800 lbs. Fuel, Soft Coal.

(*See Fig.* 116 *for general drawing.*)

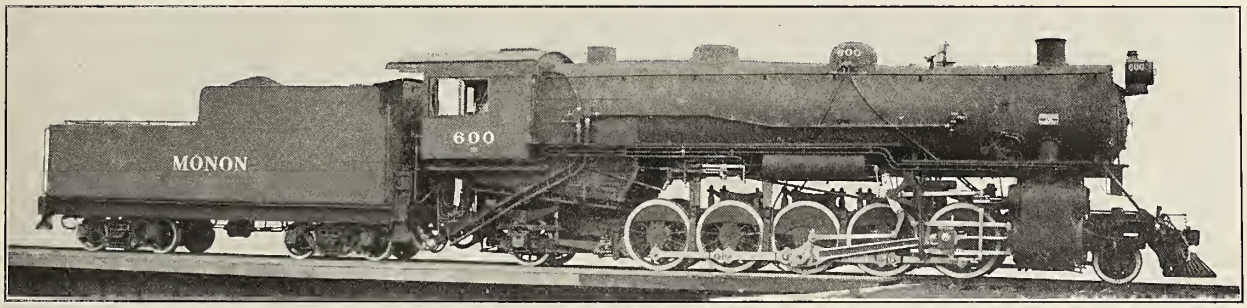

Fig. 46—Santa Fe Type (2-10-2) Locomotive for Freight Service. Built by the American Locomotive Company for the Chicago, Indianapolis & Louisville. Cylinders, 28 in. x 30 in. Steam Pressure, 190 lbs. Diameter of Drivers, 57 in. Tractive Effort, 66,700 lbs. Heating Surface—Tubes, 4,485 sq. ft.; Firebox, 276 sq. ft.; Total, 4,761 sq ft.; Superheater Surface, 1,235 sq. ft. Grate Area, 70 sq. ft. Wheel Base—Driving, 20 ft.; Total, 38 ft. 5 in. Weight on Drivers, 275,500 lbs. Total Weight of Engine, 341,000 lbs. Fuel, Soft Coal.

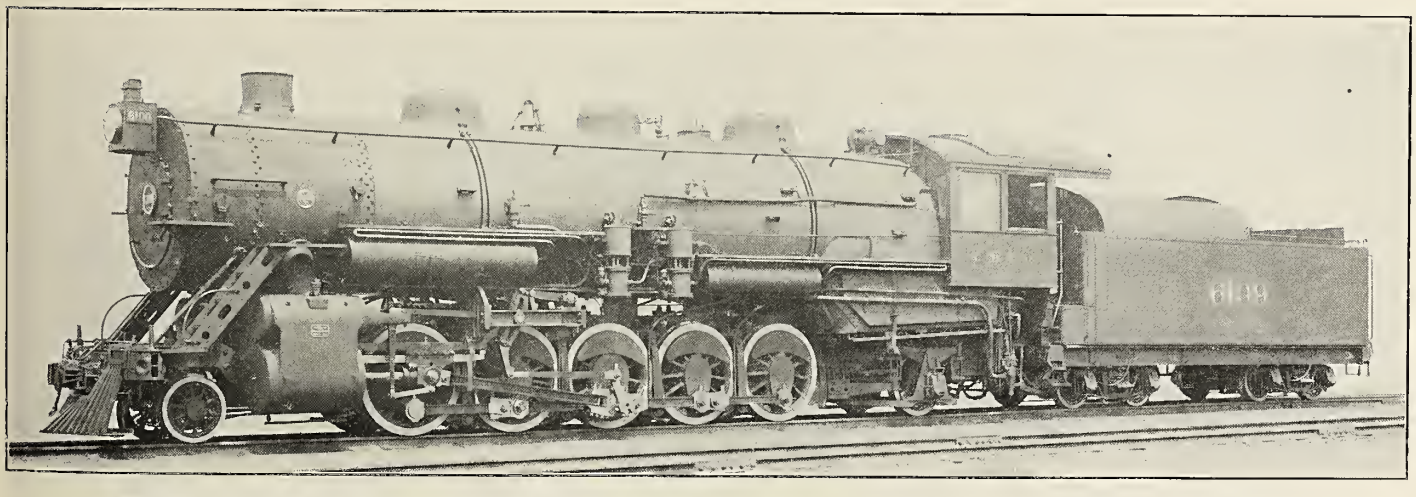

Fig. 47—Santa Fe Type (2-10-2) Locomotive for Freight Service. Built by the Baldwin Locomotive Works for the Chicago, Burlington & Quincy. Cylinders, 30 in. x 32 in. Steam Pressure, 175 lbs. Diameter of Drivers, 60 in. Tractive Effort, 71,500 lbs. Heating Surface—Tubes, 4,966 sq. ft.; Firebox, 383 sq. ft.; Total, 5,349 sq. ft.; Superheater Surface, 1,232 sq. ft. Grate Area 88 sq. ft. Wheel Base—Driving, 20 ft. 9 in.; Total, 40 ft. 1 in. Weight on Drivers, 293,000 lbs. Total Weight of Engine, 370,000 lbs. Fuel, Soft Coal.

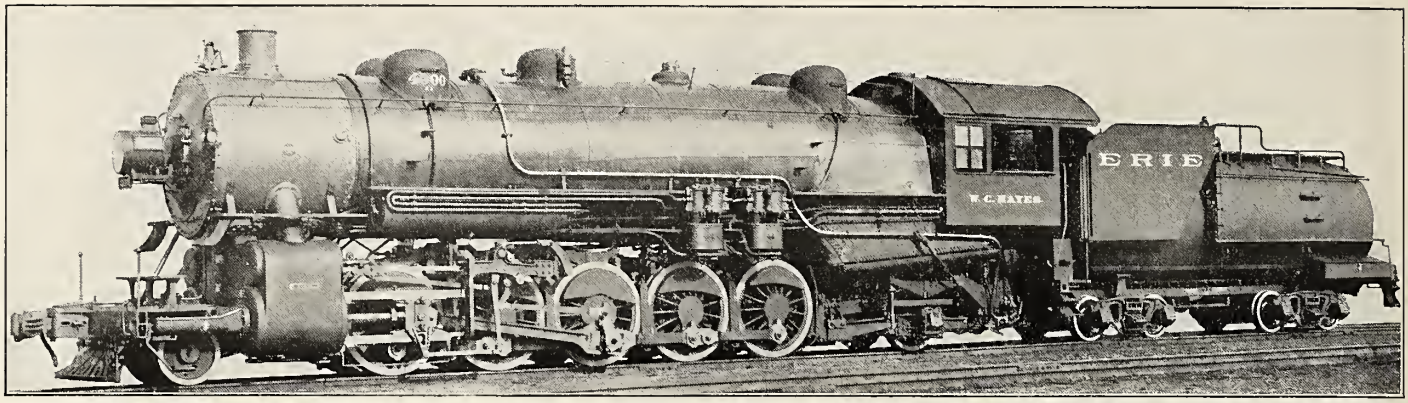

Fig. 48—Santa Fe Type (2-10-2) Locomotive for Freight Service. Built by the Baldwin Locomotive Works for the Erie. Cyls., 31 in. x 32 in. Steam Pres., 200 lbs. Diam. Drivers, 63 in. Tract. Eff., 83,000 lbs. Heat. Sur.—Tubes, 5,443 sq. ft.; Firebox, 358 sq. ft.; Total, 5,801 sq. ft.; Sup. Sur., 1,377 sq. ft. Grate Area, 88 sq. ft. Wheel Base—Driving, 22 ft.; Total, 41 ft. 3 in. Wt. on Drivers, 327,250 lbs. Total Wt. of Eng., 407,700 lbs. Fuel, Soft Coal.

(*See Fig.* 117 *for general drawing.*)

Fig. 49—American Type (4-4-0) Locomotive for Passenger Service. Built for the Delaware, Lackawanna & Western by the American Locomotive Company. Cylinders, 20 in. x 26 in. Working Steam Pressure, 185 lbs. per sq. in. Diameter of Drivers, 69 in. Tractive Effort, 23,700 lbs. Heating Surface—Tubes, 1,947.9 sq. ft.; Firebox, 190.8 sq. ft.; Total, 2,138.7 sq. ft. Grate Area, 87.5 sq. ft. Rigid Wheel Base, 8 ft. 6 in. Total Engine Wheel Base, 24 ft. 5 in. Weight on Drivers, 104,500 lbs. Total Weight of Engine, 156,000 lbs. Fuel, Fine Anthracite Coal.

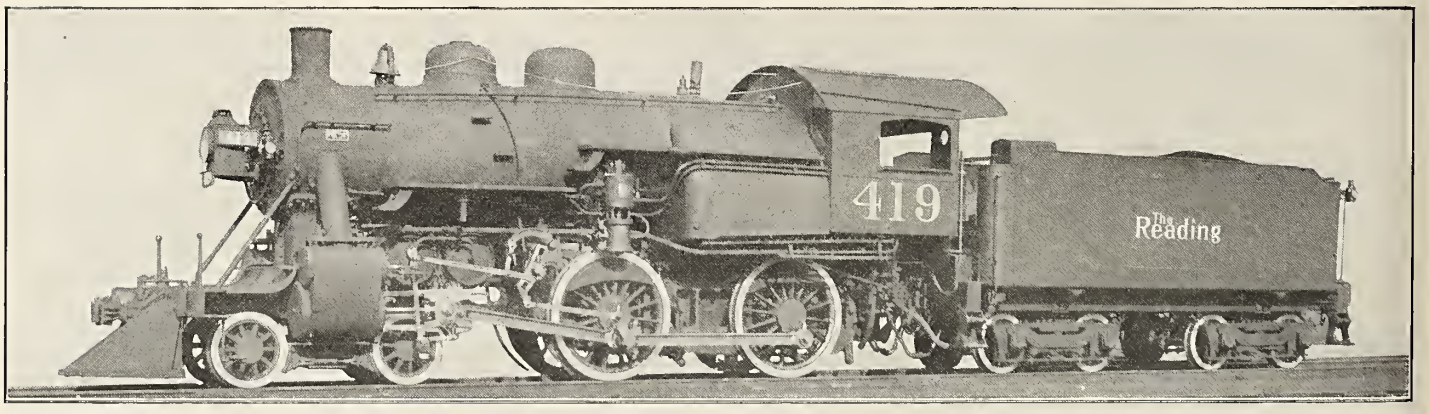

Fig. 50—American Type (4-4-0) Locomotive for Passenger Service. Built by the Baldwin Locomotive Works for the Philadelphia & Reading. Cyls., 21 in. x 24 in. Steam Pres., 210 lbs. Diam. Drivers, 68½ in. Tract. Eff., 27,850 lbs. Heat. Sur.—Tubes, 1,297 sq. ft.; Firebox, 220 sq. ft.; Total, 1,517 sq. ft.; Sup. Sur., 257 sq. ft. Grate Area, 86 sq. ft. Wheel Base—Driving, 9 ft.; Total, 24 ft. 9 in. Wt. on Drivers, 120,530 lbs. Total Wt. of Eng., 173,490 lbs. Fuel, Anthracite Coal.

(*See Fig.* 118 *for general drawing.*)

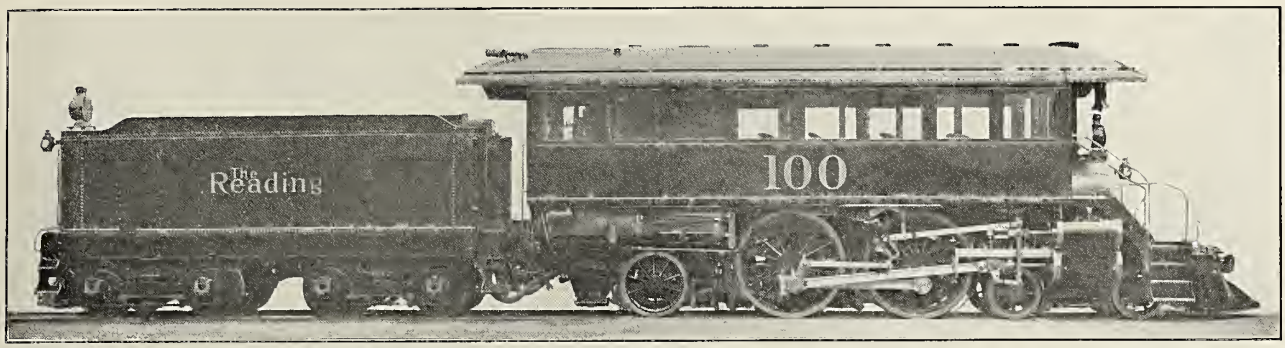

Fig. 51—Atlantic Type (4-4-2) Inspection Locomotive. Built by the Philadelphia & Reading. Cylinders, 18 in. x 24 in. Steam Pressure, 225 lbs. Diameter of Drivers, 68½ in. Tractive Effort, 21,700 lbs. Heating Surface—Tubes, 1,154 sq. ft.; Firebox, 120 sq. ft.; Total, 1,274 sq. ft. Grate Area, 63 sq. ft. Wheel Base—Driving, 6 ft. 6 in.; Total, 24 ft. 7½ in. Weight on Drivers, 98,375 lbs. Total Weight of Engine, 161,500 lbs. Fuel, Anthracite Coal.

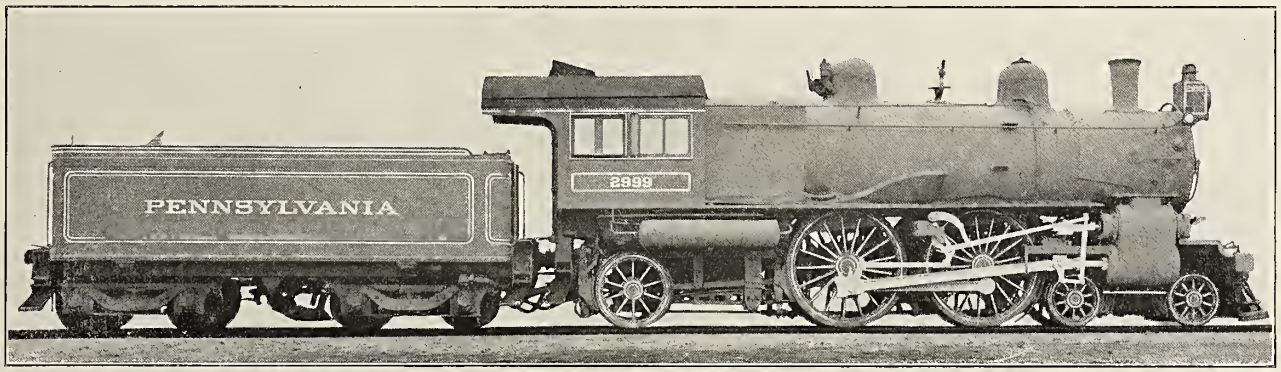

Fig. 52—Atlantic Type (4-4-2) Locomotive for Passenger Service. Built by the Pennsylvania Railroad. Class E3d. Cylinders, 22 in. x 26 in. Working Steam Pressure, 205 lbs. per sq. in. Diameter of Drivers, 80 in. Tractive Effort, 25,797 lbs. Heating Surface—Tubes, 2,474 sq. ft.; Firebox, 166 sq. ft.; Total, 2,640 sq. ft. Grate Area, 55.55 sq. ft. Rigid Wheel Base, 7 ft. 5 in. Total Engine Wheel Base, 30 ft. 9½ in. Weight on Drivers, 124,100 lbs. Total Weight of Engine, 188,600 lbs. Fuel, Soft Coal.

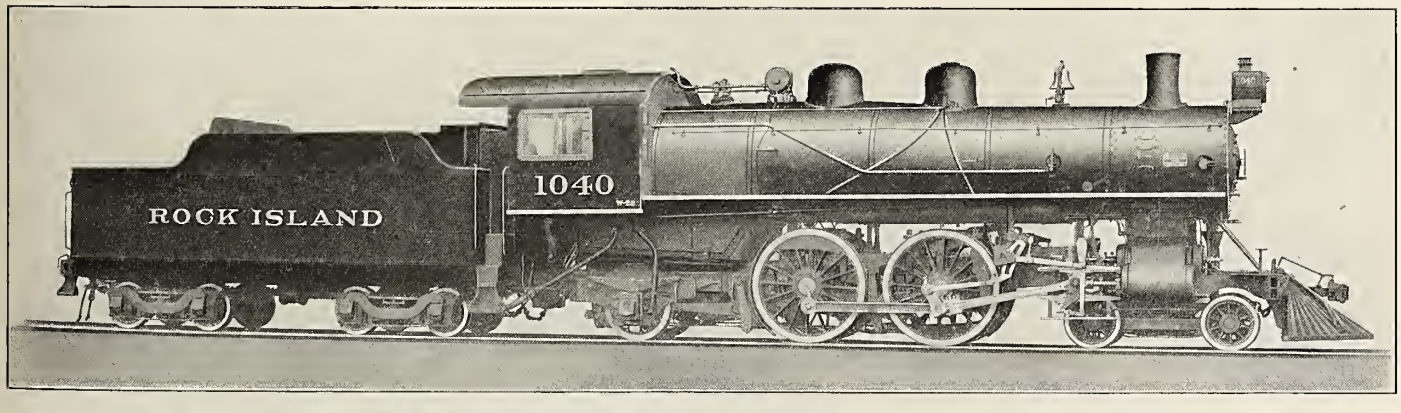

Fig. 53—Atlantic Type (4-4-2) Four Cylinder Balanced Simple Locomotive for Passenger Service. Built for the Chicago, Rock Island & Pacific by the American Locomotive Company. Cylinders, 17½ in. x 26 in. Steam Pressure, 160 lbs. Diameter of Drivers, 73 in. Tractive Effort, 29,600 lbs. Heating Surface—Tubes, 2,521 sq. ft.; Firebox, 194.5 sq. ft.; Total, 2,715.5 sq. ft.; Superheater Surface, 479 sq. ft. Grate Area, 42.8 sq. ft. Rigid Wheel Base, 7 ft. Total Engine Wheel Base, 30 ft. 10 in. Wt. on Drivers, 116,000 lbs. Total Wt. of Eng., 202,000 lbs. Fuel, Soft Coal.

(See Fig. 122 for general drawing.)

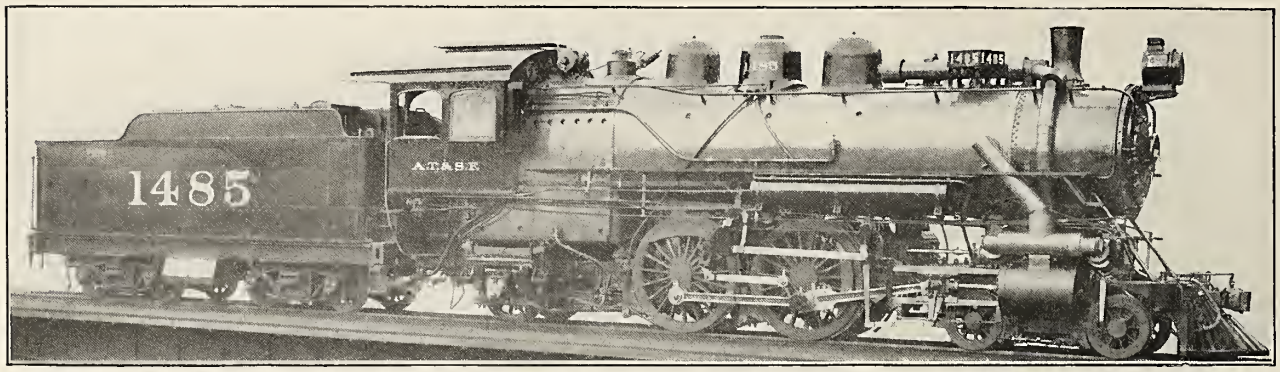

Fig. 54—Atlantic Type (4-4-2) Four Cylinder Balanced Compound Locomotive for Passenger Service. Built for the Atchison, Topeka & Santa Fe by the Baldwin Locomotive Works. Cylinders, 15 in. and 25 in. x 26 in. Steam Pres., 220 lbs. Diameter of Drivers, 73 in. Tractive Effort, 23,880 lbs. Heat. Sur.—Tubes, 2,318 sq. ft.; Firebox, 190 sq. ft.; Total, 2,508 sq. ft.; Reheating Surface, 1,147 sq. ft. Grate Area, 48 sq. ft. Rigid Wheel Base, 6 ft. 10 in. Total Engine Wheel Base, 32 ft. 8 in. Wt. on Drivers, 112,125 lbs. Total Wt. of Eng., 231,675 lbs. Fuel, Oil.

(*See Fig.* 119 *for general drawing.*)

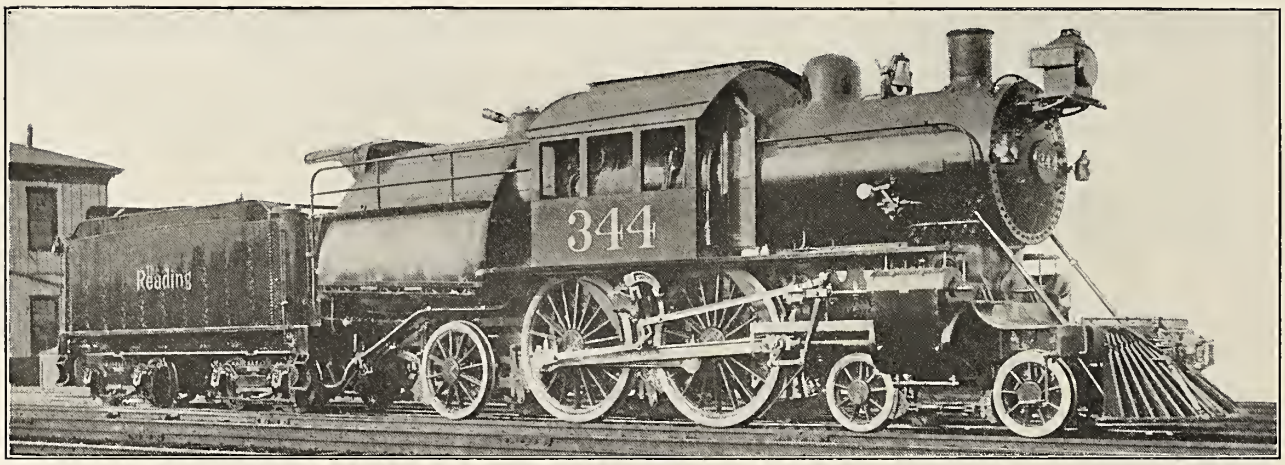

Fig. 55—Atlantic Type (4-4-2) Three Cylinder Simple Locomotive for Passenger Service. Built by the Philadelphia & Reading. Cyls., 19 in. x 24 in. Steam Pres., 230 lbs. Diam. Drivers, 80 in. Trac. Eff., 31,759 lbs. Heat. Sur.—Tubes, 2,204 sq. ft.; Firebox, 266 sq. ft.; Total 2,470 sq. ft.; Sup. Sur., 548 sq. ft. Grate Area, 94.5 sq. ft. Wheel Base—Driving, 7 ft. 9 in.: Total, 29 ft. 3 in. Wt. on Drivers, 124,875 lbs. Total Wt. of Eng., 234,025 lbs. Fuel, Anthracite Coal.

(*See Fig.* 121 *for General Drawing of Similar Engine without Schmidt Superheater.*)

Fig. 56—Atlantic Type (4-4-2) Locomotive for Passenger Service. Built by the Pennsylvania Railroad. Cyls., 23½ in. x 26 in. Steam Pres., 205 lbs. Diam. Drivers, 80 in. Tract. Eff., 29,427 lbs. Heat. Sur. Tubes, 2,660.5 sq. ft.; Firebox, 195.7 sq. ft.; Total, 2,856.2 sq. ft.; Sup. Sur., 721 sq. ft. Grate Area, 55.13 sq. ft. Wheel Base—Driving, 7 ft. 5 in.; Total, 29 ft. 7½ in. Wt. on Drivers, 133,100 lbs. Total Wt. of Eng., 240,000 lbs. Fuel, Soft Coal.

(*See Fig.* 120 *for general drawing.*)

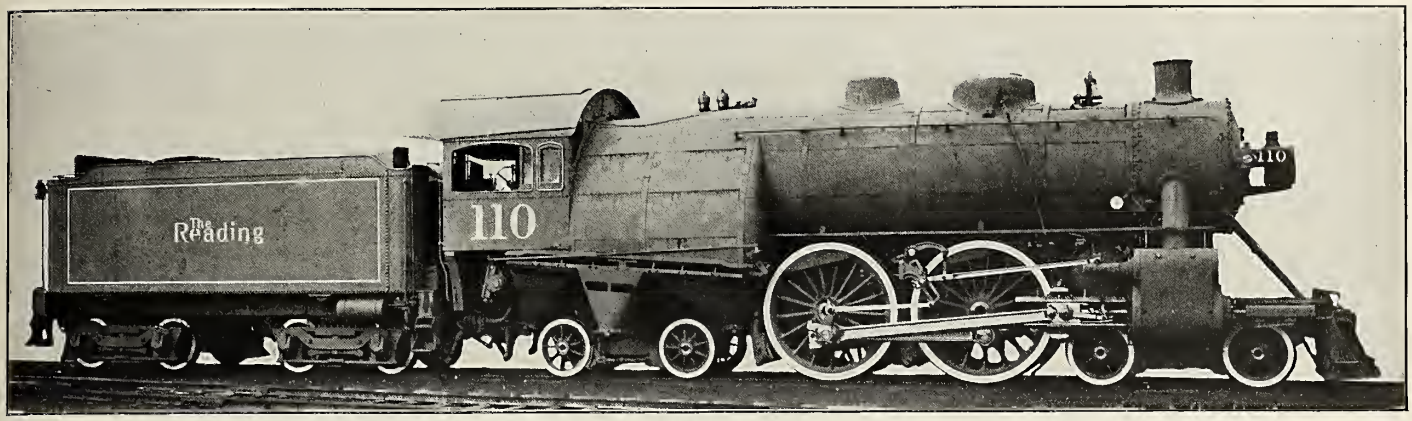

Fig. 57—Reading Type (4-4-4) Locomotive for Passenger Service. Built by the Philadelphia & Reading. Cylinders, 23½ in. x 26 in. Steam Pressure, 240 lbs. Diameter of Drivers, 80 in. Tractive Effort, 36,600 lbs. Heating Surface—Tubes, 2,199 sq. ft.; Firebox, 292 sq. ft.; Total, 2,491 sq. ft.; Superheater Surface, 679 sq. ft. Grate Area, 108 sq. ft. Wheel Base—Driving, 7 ft. 3 in.; Total, 33 ft. 3 in. Weight on Drivers, 146,200 lbs. Total Weight of Engine, 230,800 lbs. Fuel, Anthracite Coal.

(*See Fig.* 123 *for general drawing.*)

Fig. 58—Ten-Wheel (4-6-0) Locomotive for Passenger Service. Built for the Delaware & Hudson by the American Locomotive Company. Cylinders, 21 in. x 26 in. Working Steam Pressure, 200 lbs. per sq. in. Diameter of Drivers, 63 in. Tractive Effort, 30,900 lbs. Heating Surface—Tubes, 2,639 sq. ft.; Firebox, 151 sq. ft.; Total, 2,790 sq. ft. Grate Area, 50.2 sq. ft. Rigid Wheel Base, 15 ft. Total Engine Wheel Base, 26 ft. 7 in. Weight on Drivers, 146,000 lbs. Total Weight of Engine, 193,000 lbs. Fuel, Oil.

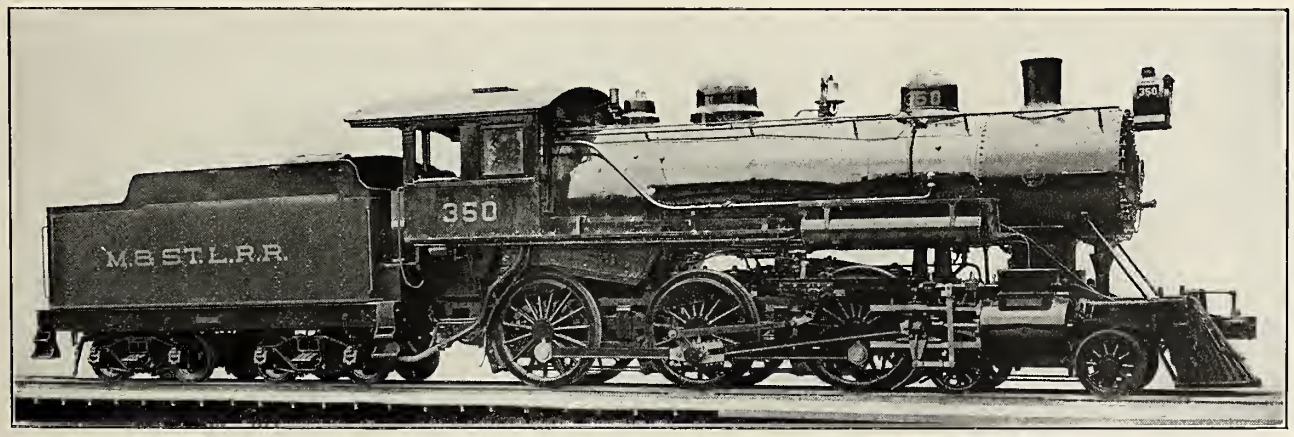

Fig. 59—Ten-Wheel (4-6-0) Locomotive for Passenger Service. Built for the Minneapolis & St. Louis by the Baldwin Locomotive Works. Cylinders, 21 in. x 26 in. Working Steam Pressure, 200 lbs. per sq. in. Diameter of Drivers, 68 in. Tractive Effort, 28,700 lbs. Heating Surface—Tubes, 2,473 sq. ft.; Water Tubes, 24 sq ft.; Firebox, 152 sq. ft.; Total, 2,649 sq. ft. Grate Area, 42.5 sq. ft. Rigid Wheel Base, 15 ft. 10 in. Total Engine Wheel Base, 26 ft. 11 in. Weight on Drivers, 132,900 lbs. Total Weight of Engine, 173,850 lbs. Fuel, Soft Coal.

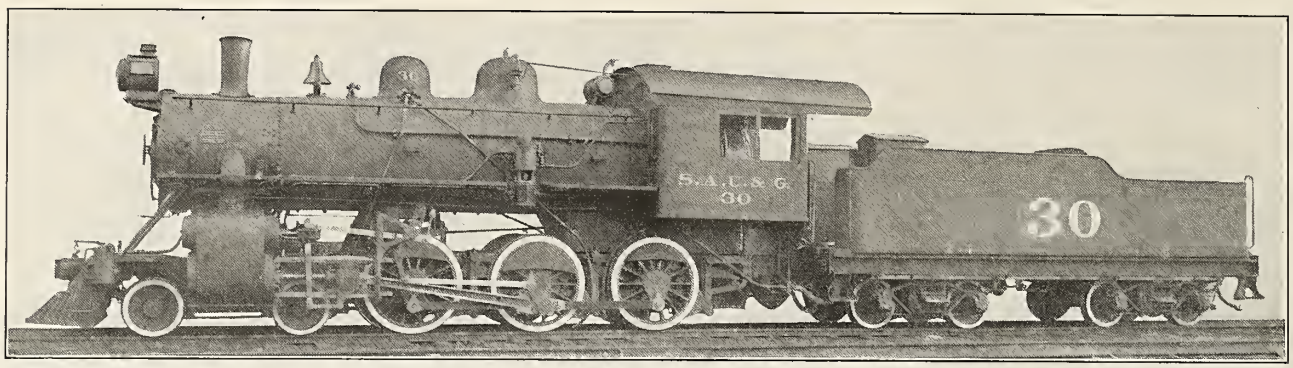

Fig. 60—Ten-Wheel (4-6-0) Locomotive for Freight Service. Built by the American Locomotive Company for the San Antonio, Uvalde & Gulf. Cylinders, 20 in. x 24 in. Steam Pressure, 180 lbs. Diameter of Drivers, 56 in. Tractive Effort, 26,200 lbs. Heating Surface—Tubes, 1,405 sq. ft.; Firebox, 155 sq. ft.; Total, 1,560 sq. ft.; Superheater Surface, 310 sq. ft. Grate Area, 31.5 sq. ft. Wheel Base—Driving, 12 ft.; Total, 23 ft. 1 in. Weight on Drivers, 113,500 lbs. Total Weight of Engine, 147,500 lbs. Fuel, Soft Coal.

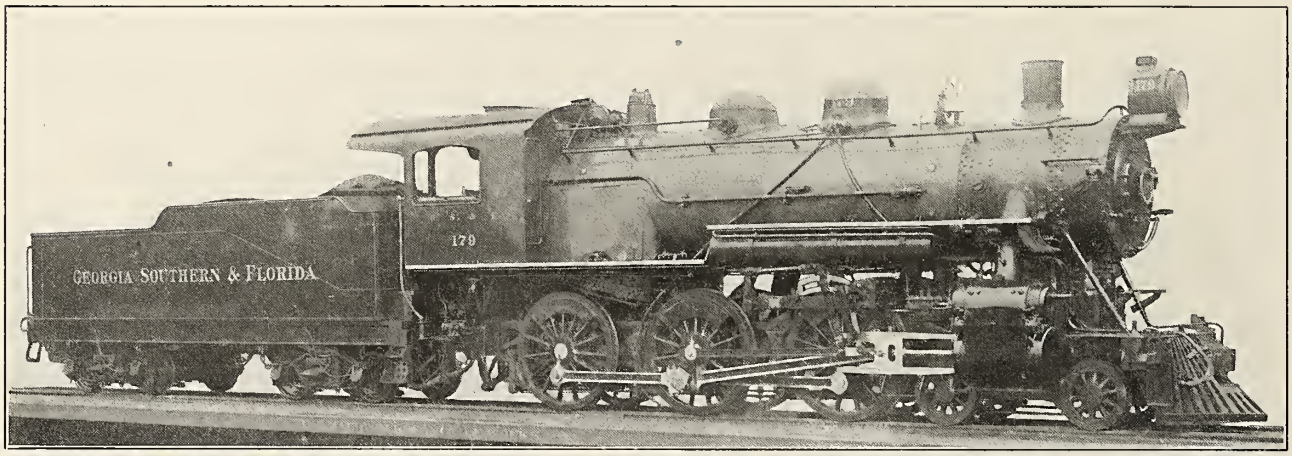

Fig. 61—Ten-Wheel (4-6-0) Locomotive for Passenger Service. Built by the Baldwin Locomotive Works for the Georgia Southern & Florida. Cylinders, 21 in. x 28 in. Steam Pressure, 200 lbs. Diameter of Drivers, 68 in. Tractive Effort, 30,500 lbs. Heating Surface—Tubes, 2,100 sq. ft.; Firebox, 168 sq. ft.; Total, 2,268 sq. ft.; Superheater Surface, 462 sq. ft. Grate Area, 49 sq. ft. Wheel Base—Driving, 15 ft.; Total, 25 ft. 11½ in. Weight on Drivers, 147,200 lbs. Total Weight of Engine, 192,250 lbs. Fuel, Soft Coal.

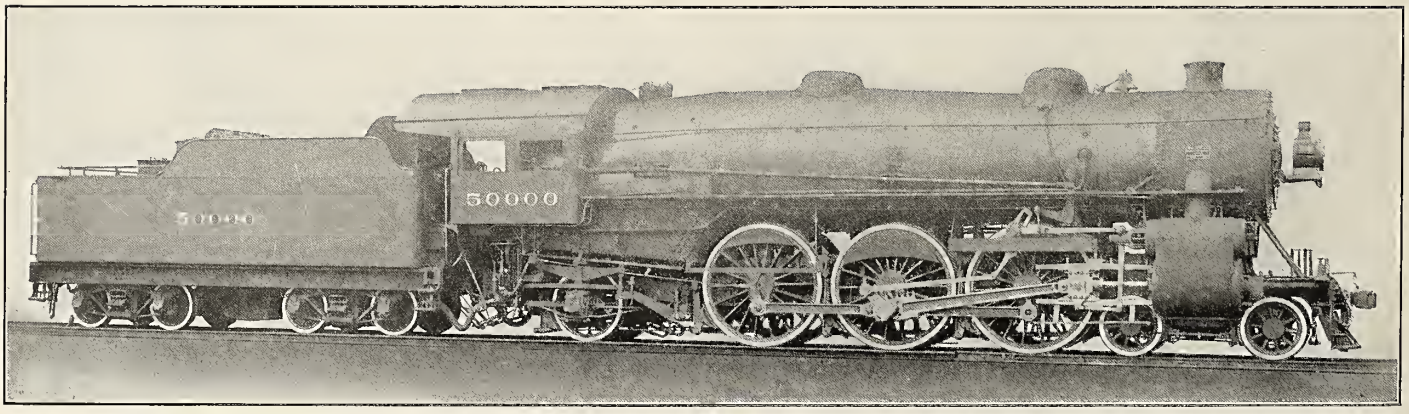

Fig. 62—Pacific Type (4-6-2) Passenger Locomotive. Built for Experimental Purposes by the American Locomotive Co. Cyls., 27 in. x 28 in. Steam Pres., 185 lbs. Dia. of Drivers, 79 in. Tractive Effort, 40,600 lbs. Heat. Sur.—Tubes, 3,800 sq. ft.; Firebox, 248 sq. ft.; Total, 4,048 sq. ft.; Superheater Sur., 897 sq. ft. Grate Area, 59.75 sq. ft. Rigid Wheel Base, 14 ft. Total Eng. Wheel Base, 35 ft. 7 in. Wt. on Drivers, 172,500 lbs. Total Wt. of Eng., 269,000 lbs. Fuel, Soft Coal.

(*See Fig. 126 for general drawing.*)

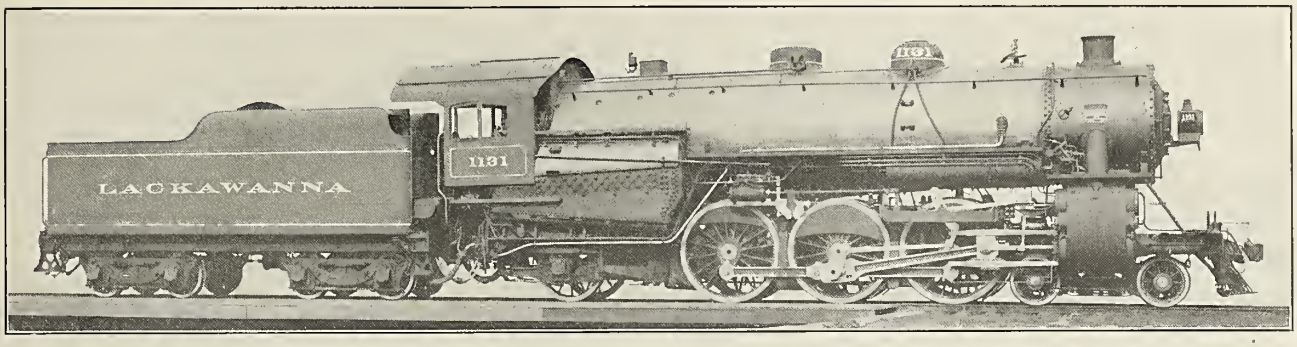

Fig. 63—Pacific Type (4-6-2) Locomotive for Passenger Service. Built by the American Locomotive Company for the Delaware, Lackawanna & Western. Cylinders, 27 in. x 28 in. Steam Pressure, 200 lbs. Diameter of Drivers, 73 in. Tractive Effort, 47,500 lbs. Heating Surface—Tubes, 3,311 sq. ft.; Firebox, 364 sq. ft.; Water Tubes, 260 sq. ft.; Total, 3,935 sq. ft.; Superheater Surface, 760 sq. ft. Grate Area, 91.3 sq. ft. Wheel Base—Driving, 13 ft.; Total, 34 ft. 5 in. Weight on Drivers, 197,300 lbs. Total Weight of Engine, 305,500 lbs. Fuel, Anthracite Coal.

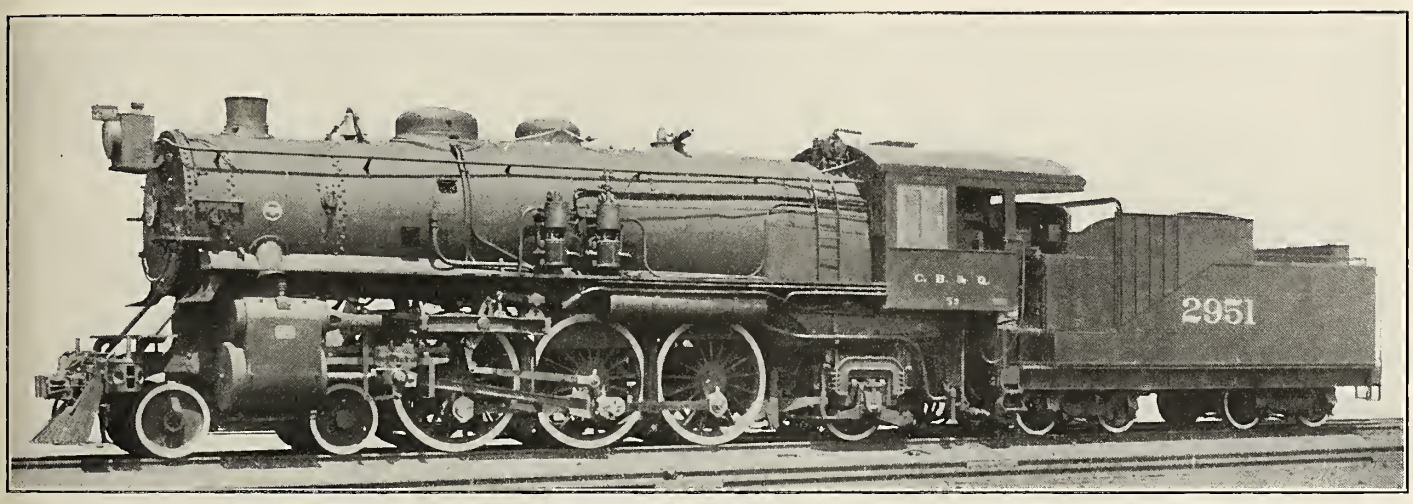

Fig. 64—Pacific Type (4-6-2) Locomotive for Passenger Service. Built by the Baldwin Locomotive Works for the Chicago, Burlington & Quincy. Cylinders, 27 in. x 28 in. Steam Pressure, 180 lbs. Diameter of Drivers, 74 in. Tractive Effort, 42,000 lbs. Heating Surface—Tubes, 3,072 sq. ft.; Firebox, 292 sq. ft.; Total, 3,364 sq. ft.; Superheater Surface, 751 sq. ft. Grate Area, 58.7 sq. ft. Wheel Base—Driving, 13 ft.; Total, 33 ft. 8½ in. Weight on Drivers, 169,700 lbs. Total Weight of Engine, 266,400 lbs. Fuel, Soft Coal.

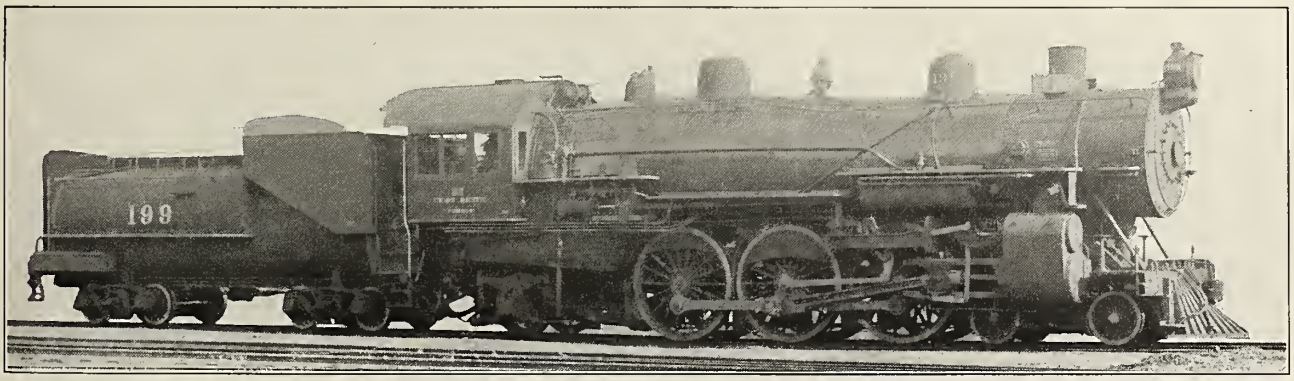

Fig. 65—Pacific Type (4-6-2) Locomotive for Passenger Service. Built by the Lima Locomotive Corporation for the Union Pacific. Cylinders, 25 in. x 28 in. Steam Pressure, 200 lbs. Diameter of Drivers, 77 in. Tractive Effort, 38,600 lbs. Heating Surface—Tubes, 3,731 sq. ft.; Firebox, 235 sq. ft.; Total, 3,966 sq. ft.; Superheater Surface, 815 sq. ft. Grate Area, 70.4 sq. ft. Wheel Base—Driving, 13 ft. 4 in.; Total, 35 ft. 8 in. Weight on Drivers, 164,100 lbs. Total Weight of Engine, 273,500 lbs. Fuel, Soft Coal.

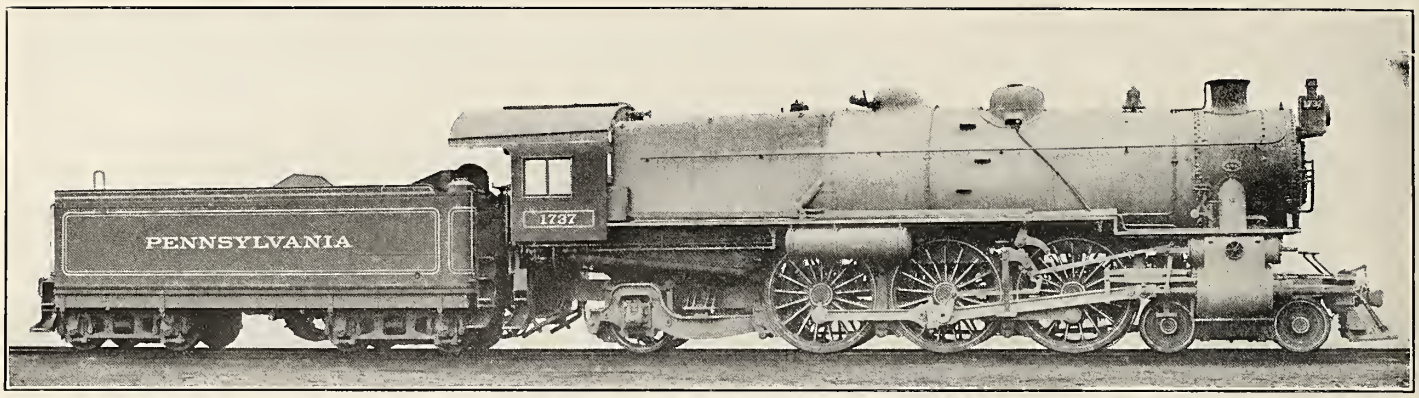

Fig. 66—Pacific Type (4-6-2) Locomotive for Passenger Service. Built by the Pennsylvania Railroad. Cylinders, 27 in. x 28 in. Steam Pressure 205 lbs. Diameter of Drivers, 80 in. Tractive Effort, 41,845 lbs. Heating Surface—Tubes, 3,746 sq ft.; Firebox, 288.6 sq. ft.; Total, 4,035.4 sq. ft.; Superheater Surface, 1,153.9 sq. ft. Grate Area, 70 sq. ft. Wheel Base—Driving, 13 ft. 10 in.; Total, 36 ft. 6 in. Weight on Drivers, 201,800 lbs. Total Weight of Engine, 308,900 lbs. Fuel, Soft Coal.

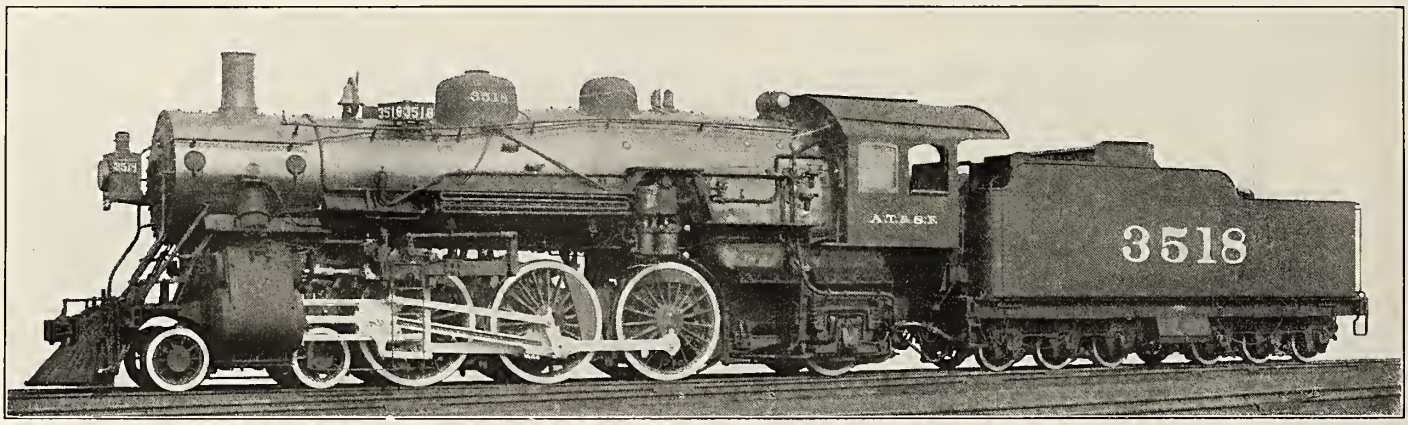

Fig. 67—Pacific Type (4-6-2) Four Cylinder Balanced Compound for Passenger Service. Built by the Baldwin Locomotive Works for the Atchison, Topeka & Santa Fe. Cylinders, 17½ in. and 29 in. x 28 in. Steam Pressure, 210 lbs. Diameter of Drivers, 73 in. Tractive Effort, 34,000 lbs. Heating Surface—Tubes, 3,235 sq. ft.; Firebox, 240 sq. ft.; Total, 3,475 sq. ft.; Superheater Surface, 619 sq. ft. Grate Area, 58 sq. ft. Wheel Base—Driving, 13 ft. 8 in.; Total, 35 ft. 1 in. Weight on Drivers, 165,100 lbs. Total Weight of Engine, 277,700 lbs. Fuel, Soft Coal.

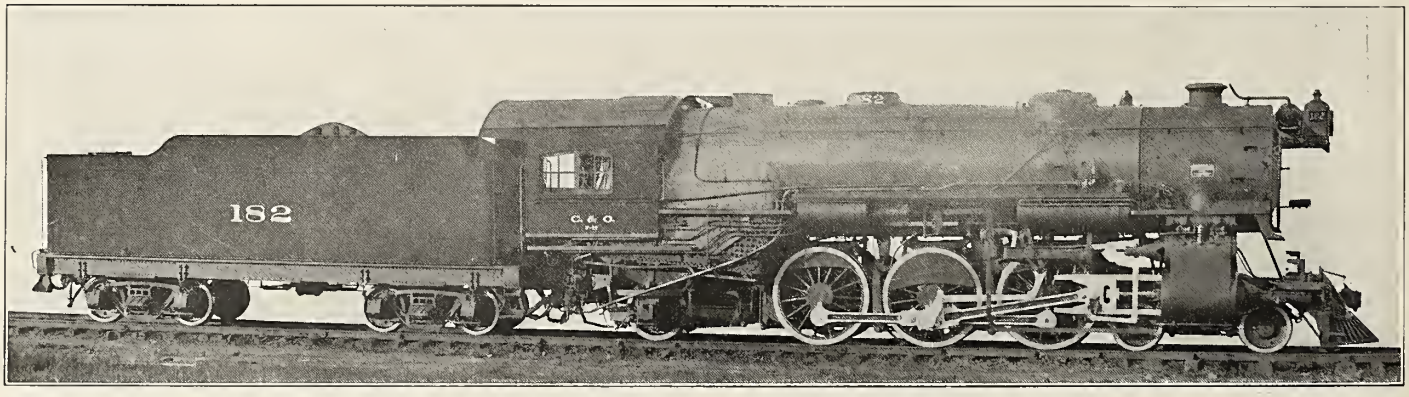

Fig. 68—Pacific Type (4-6-2) Locomotive for Passenger Service. Built by the American Locomotive Company for the Chesapeake & Ohio. Cylinders, 27 in. x 28 in. Steam Pressure, 185 lbs. Diameter of Drivers, 69 in. Tractive Effort, 46,600 lbs. Heating Surface—Tubes, 4,196 sq. ft.; Firebox, 283 sq. ft.; Total, 4,478 sq. ft.; Superheater Surface, 991 sq. ft. Grate Area, 80 sq. ft. Wheel Base—Driving, 13 ft.; Total, 34 ft. 9 in. Weight on Drivers, 191,455 lbs. Total Weight of Engine, 312,605 lbs. Fuel, Soft Coal.

(*See Fig.* 128 *for general drawing.*)

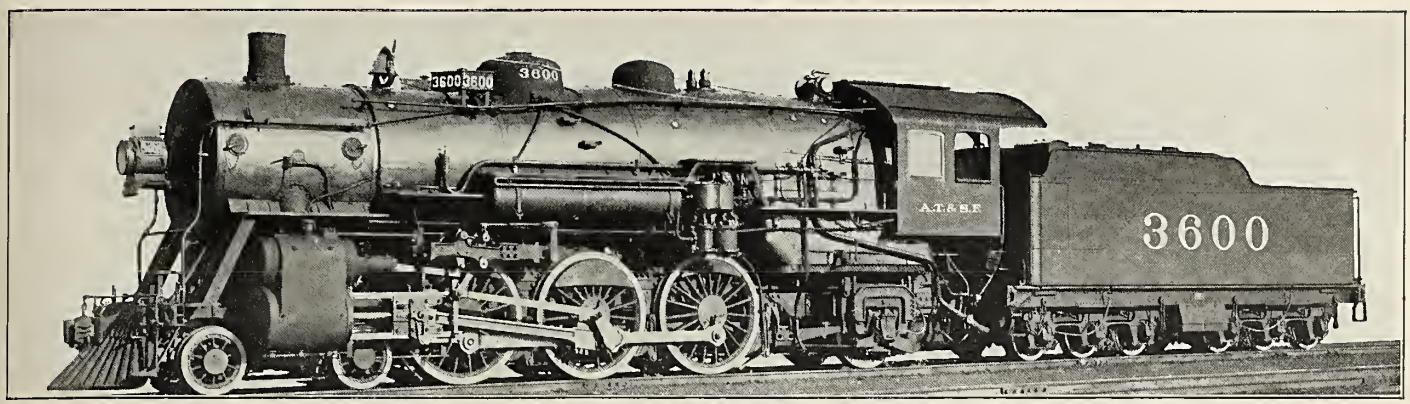

Fig. 69—Pacific Type (4-6-2) Locomotive for Passenger Service. Built for the Atchison, Topeka & Santa Fe by the Baldwin Locomotive Works. Cyls., 26 in. x 26 in. Steam Pres., 200 lbs. Dia. Drivers, 73 in. Tract. Eff., 41,000 lbs. Heat. Sur.—Tubes, 4,211 sq. ft.; Firebox, 232 sq. ft.; Total, 4,443 sq. ft.; Sup. Sur., 980 sq. ft. Grate Area, 66.7 sq. ft. Wheel Base—Driving, 13 ft. 8 in.; Total, 35 ft. 3 in. Wt. on Drivers, 172,550 lbs. Total Wt. of Eng., 288,700 lbs. Fuel, Oil.
(*See Fig.* 129 *for general drawing.*)

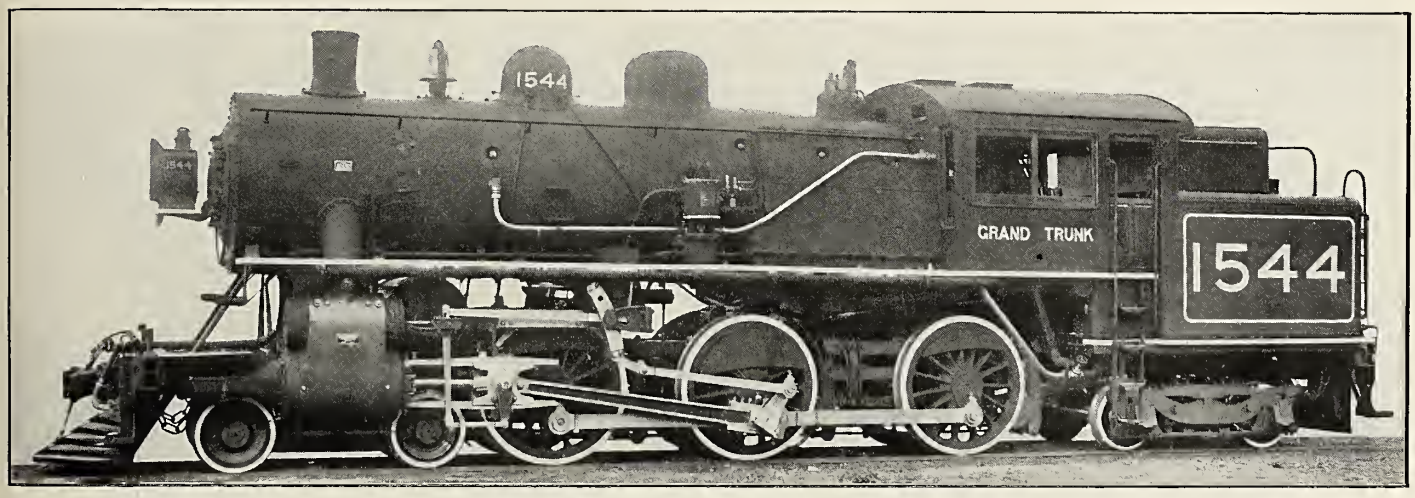

Fig. 70—Suburban Type (4-6-4) Locomotive for Passenger Service. Built by the Montreal Locomotive Works for the Grand Trunk. Cyls., 21 in. x 26 in. Steam Pres., 200 lbs. Diam. Drivers, 63 in. Tract. Eff., 30,940 lbs. Heat. Sur.—Tubes, 1,604 sq. ft.; Firebox, 204 sq. ft.; Total, 1,808 sq. ft.; Sup. Sur., 347 sq. ft. Grate Area, 47 sq. ft. Wheel Base—Driving, 15 ft. 8 in.; Total, 39 ft. 4½ in. Wt. on Drivers, 146,000 lbs. Total Wt. of Eng., 262,000 lbs. Fuel, Soft Coal.
(*See Fig.* 130 *for general drawing.*)

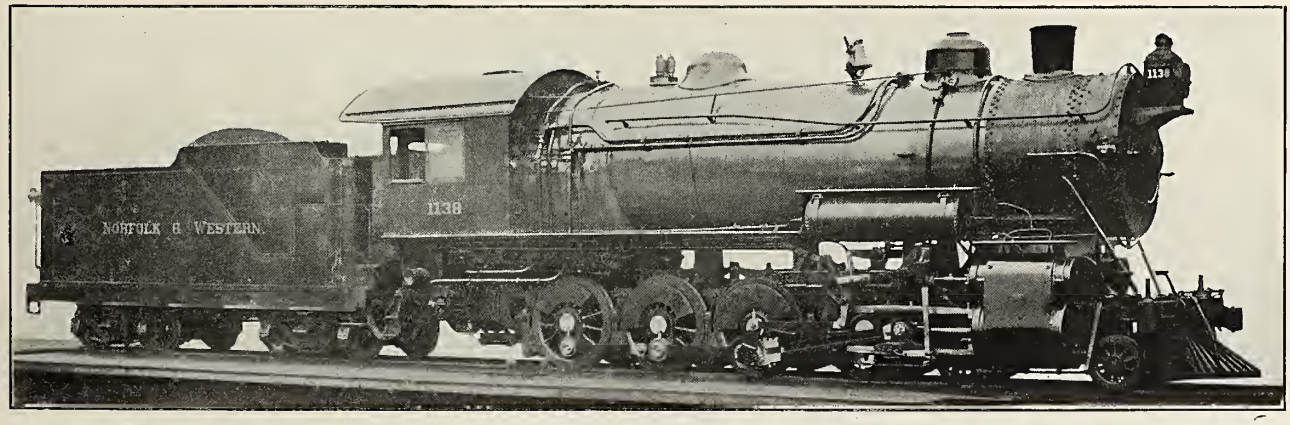

Fig. 71—Twelve-Wheel (4-8-0) Locomotive for Freight Service. Built for the Norfolk & Western by the Baldwin Locomotive Works. Cylinders, 24 in. x 30 in. Steam Pres., 200 lbs. per sq. in. Dia. of Drivers, 56 in. Tractive Effort, 52,400 lbs. Heating Sur.—Tubes, 3,922 sq. ft.; Firebox, 182 sq. ft.; Total, 4,041 sq. ft. Grate Area, 44.7 sq. ft. Rigid Wheel Base, 16 ft. Total Eng. Wheel Base, 27 ft. 1 in. Wt. on Drivers, 213,200 lbs. Total Wt. of Eng., 261,100 lbs. Fuel, Soft Coal.

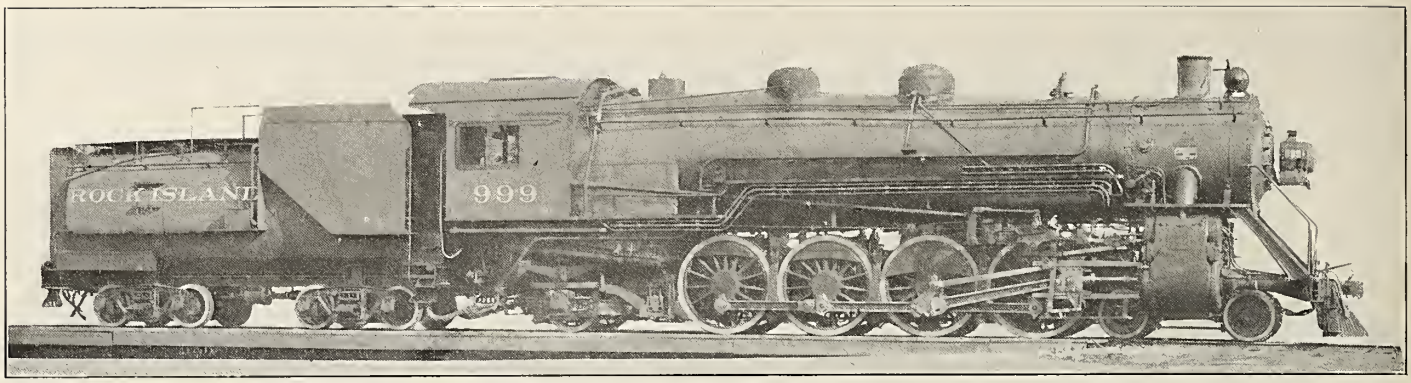

Fig. 72—Mountain Type (4-8-2) Locomotive for Passenger Service. Built for the Chicago, Rock Island & Pacific by the American Locomotive Company. Cylinders, 28 in. x 28 in. Steam Pressure, 185 lbs. Diameter of Drivers, 69 in. Tractive Effort, 50,000 lbs. Heating Surface—Tubes, 3,805 sq. ft.; Firebox, 312 sq. ft.; Total, 4,117 sq. ft.; Superheater Surface, 944 sq. ft. Grate Area, 62.7 sq. ft. Wheel Base—Driving, 18 ft.; Total, 38 ft. 11 in. Weight on Drivers, 224,000 lbs. Total Weight of Engine, 333,000 lbs. Fuel, Soft Coal.

Fig. 73—Mountain Type (4-8-2) Locomotive for Passenger Service. Built for the Great Northern by the Lima Locomotive Corporation. Cylinders, 28 in. x 32 in. Steam Pressure, 180 lbs. Diameter of drivers, 62 in. Tractive Effort, 61,900 lbs. Heating Surface—Tubes, 4,200 sq. ft.; Firebox, 340 sq. ft.; Total, 4,540 sq. ft.; Superheater Surface, 1,075 sq. ft. Grate Area, 78 sq. ft. Wheel Base—Driving, 16 ft. 9 in.; Total, 38 ft. Weight on Drivers, 218,000 lbs. Total Weight of Engine, 326,000 lbs. Fuel, Soft Coal.

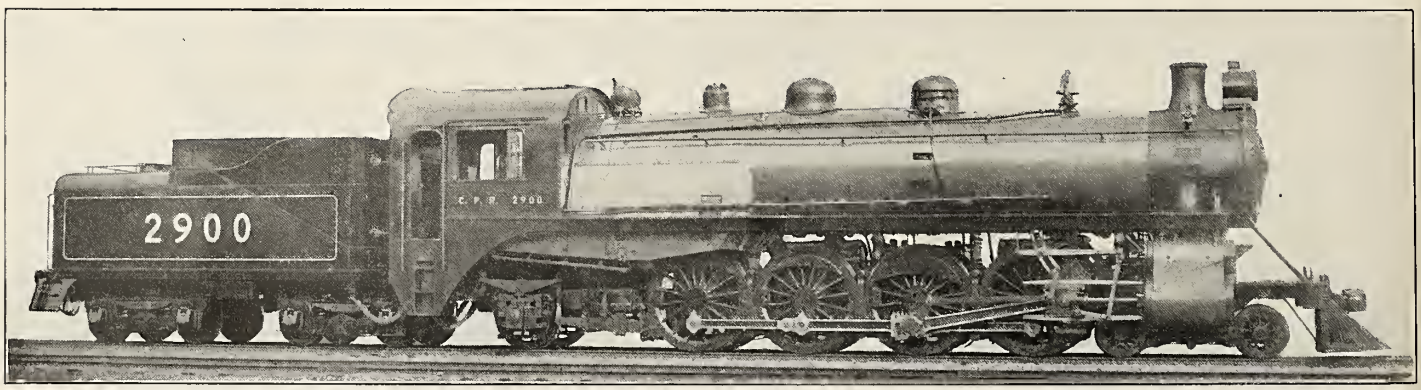

Fig. 74—Mountain Type (4-8-2) Locomotive for Passenger Service. Built by the Canadian Pacific. Cylinders 23½ in. x 32 in. Steam Pressure, 200 lbs. Diameter of Drivers, 70 in. Tractive Effort, 43,000 lbs. Heating Surface—Tubes, 3,402 sq. ft.; Firebox, 309 sq. ft.; Total, 3,711 sq. ft.; Superheater Surface, 760 sq. ft. Grate Area, 59.6 sq. ft. Wheel Base—Driving, 18 ft. 3 in.; Total, 39 ft. 6 in Weight on Drivers, 192,000 lbs. Total Weight of Engine, 286,000 lbs. Fuel, Soft Coal.

Fig. 75—Mallet Articulated (0-6-6-0) Compound Locomotive for Freight Service. Built for the Kansas City Southern by the American Locomotive Company. Cylinders, 22 in. and 35 in. x 32 in. Working Steam Pressure, 225 lbs. per sq. in. Diameter of Drivers, 56 in. Tractive Effort, 81,900 lbs. Heating Surface—Tubes, 4,160 sq. ft.; Firebox, 214 sq. ft.; Total, 4,374 sq. ft.; Superheater Surface, 858 sq. ft. Grate Area. 72.3 sq. ft. Rigid Wheel Base, 10 ft. 2 in. Total Engine Wheel Base, 31 ft. 2 in. Total Weight of Engine, 352,000 lbs. Fuel, Oil.

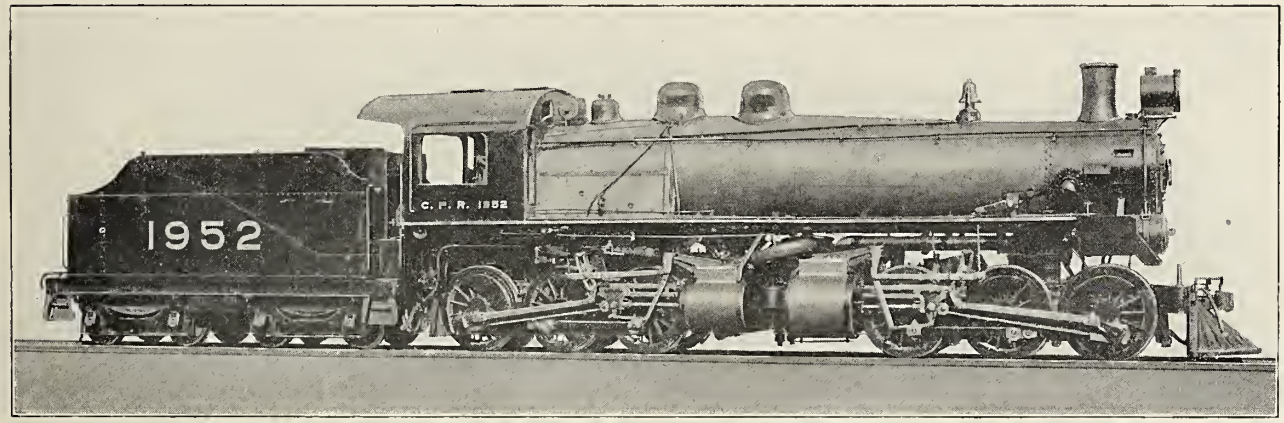

Fig. 76—Mallet Articulated (0-6-6-0) Compound Locomotive for Freight Service. Built by the Canadian Pacific. Cylinders, 23 in. and 34 in. x 26 in. Working Steam Pressure, 200 lbs. per sq. in. Diameter of Drivers, 58 in. Tractive Effort, 57,000 lbs. Heating Surface—Tubes, 2,589 sq. ft.; Firebox, 180 sq. ft.; Total, 2,769 sq. ft.; Superheater Surface, 548 sq. ft. Grate Area, 58 sq. ft. Rigid Wheel Base, 10 ft. 4 in. Total Engine Wheel Base, 35 ft. 2 in. Total Weight of Engine, 259,000 lbs. Fuel, Soft Coal.

Fig. 77—Mallet Articulated (0-6-6-0) Compound Locomotive for Switching Service. Built for the New York Central by the American Locomotive Company. Cylinders, 21½ in. and 34 in. x 30 in. Steam Pressure, 220 lbs. Diameter of Drivers, 51 in. Tractive Effort, 77,800 lbs. Heating Surface —Tubes, 3,980.7 sq. ft.; Firebox, 265 sq. ft.; Total, 4,245.7 sq. ft.; Superheater Surface, 948 sq. ft. Grate Area, 53.6 sq. ft. Wheel Base—Driving, 10 ft. and 10 ft.; Total, 30 ft. 8 in. Weight on Drivers, 348,000 lbs. Total Weight of Engine, 348,000 lbs. Fuel, Soft Coal.

Fig. 78—Mallet Articulated (0-8-8-0) Compound Locomotive for Freight Service. Built for the Delaware & Hudson by the American Locomotive Company. Cylinders, 26 in. and 41 in. x 28 in. Working Steam Pressure, 220 lbs. per sq. in. Diameter of Drivers, 51 in. Tractive Effort, 105,500 lbs. Heating Surface—Tubes, 5,245 sq. ft.; Firebox, 353 sq. ft.; Total, 5,598 sq. ft.; Superheater Surface; 1,106 sq. ft. Grate Area, 100 sq. ft. Rigid Wheel Base, 14 ft. 9 in. Total Engine Wheel Base, 40 ft. 2 in. Total Weight of Engine, 457,000 lbs. Fuel, Soft Coal.

(*See Fig.* 135 *for general drawing.*)

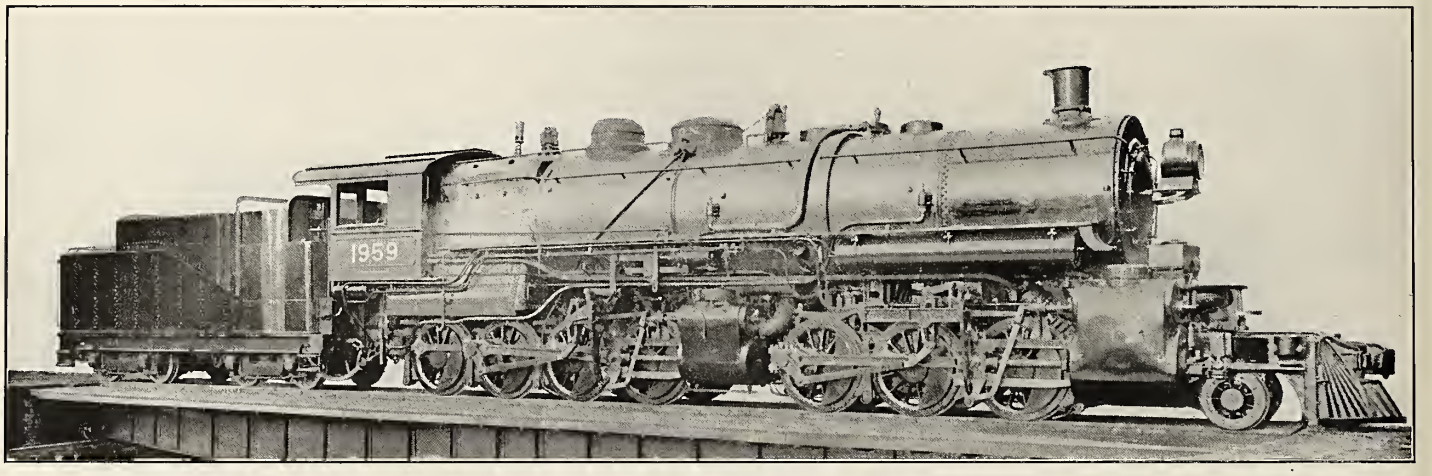

Fig. 79—Mallet Articulated (2-6-8-0) Compound Locomotive for Freight Service. Built for the Great Northern by the Baldwin Locomotive Works. Cylinders, 23 in. and 35 in. x 32 in. Working Steam Pressure, 200 lbs. per sq. in. Diameter of Drivers, 55 in. Tractive Effort, 82,000 lbs. Heating Surface—Tubes, 3,038 sq. ft.; Firebox, 225 sq. ft.; Feed Water Heater, 1,797 sq. ft.; Total, 5,060 sq. ft.; Superheater Surface, 480 sq. ft. Grate Area, 78 sq. ft. Rigid Wheel Base, 15 ft. Total Engine Wheel Base, 43 ft. 11 in. Weight on Drivers, 359,600 lbs. Total Weight of Engine, 378,300 lbs. Fuel, Soft Coal.

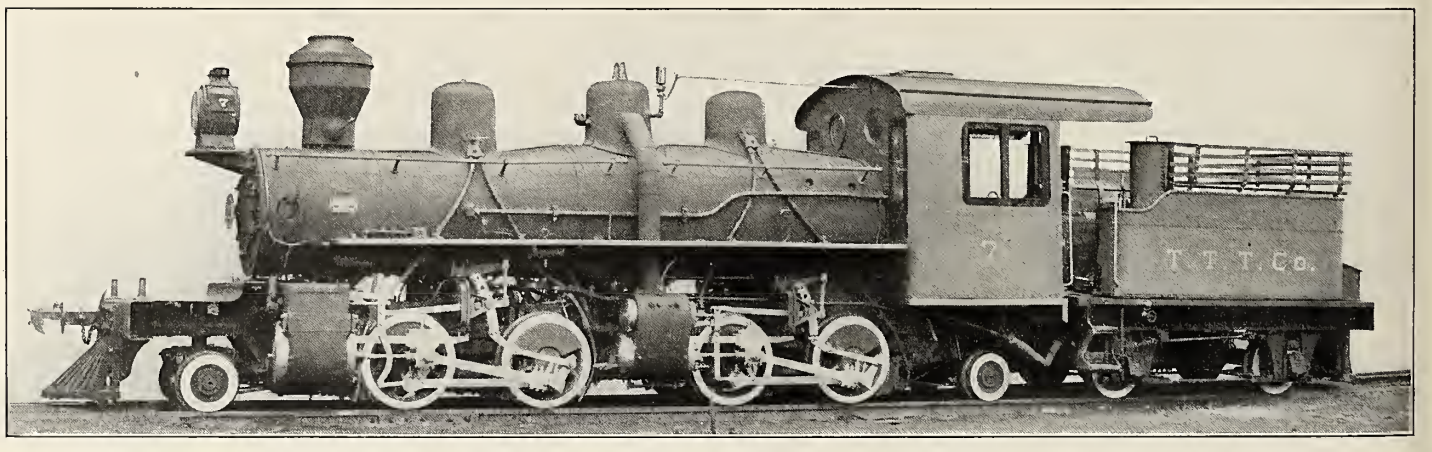

Fig. 80—Mallet Articulated (2-4-4-2) Compound Locomotive for Logging Service. Built by the American Locomotive Company for the Taupo, Totaro Timber Company. Cylinders, 10 in. and 16 in. x 14 in. Steam Pressure, 180 lbs. Diameter of Drivers, 32 in. Tractive Effort, 10,500 lbs. Heating Surface—Tubes, 638 sq. ft.; Firebox, 65 sq. ft.; Total, 693 sq. ft. Grate Area, 15 sq. ft. Rigid Wheel Base, 4 ft.; Total Engine Wheel Base, 24 ft. 1½ in. Weight on Drivers, 55,200 lbs. Total Weight of Engine, 69,000 lbs. Fuel, Wood.

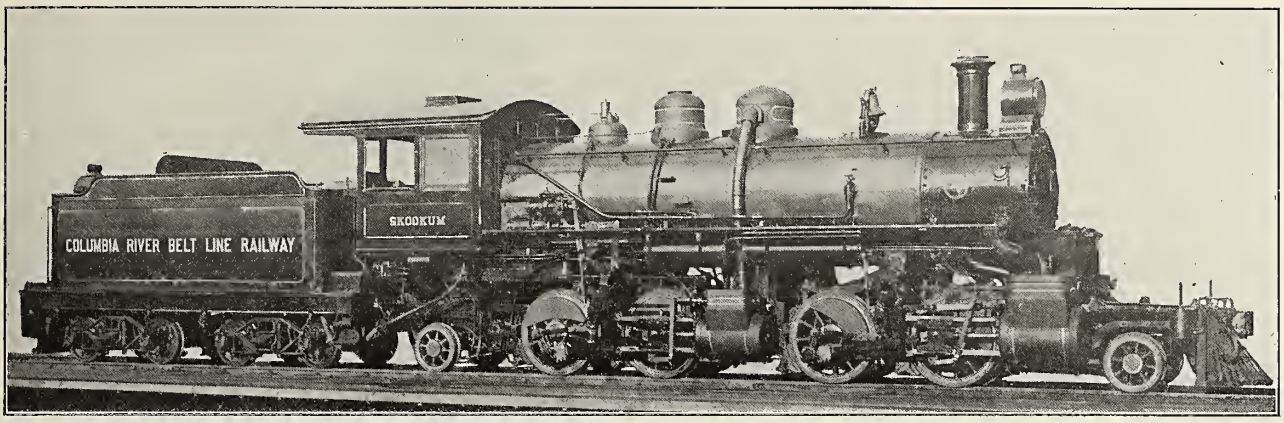

Fig. 81—**Mallet Articulated (2-4-4-2) Locomotive** for Logging Service. Built for the Whitney Company, Ltd. by the Baldwin Locomotive Works. Cylinders, 15 in. and 23 in. x 22 in. Working Steam Pressure, 200 lbs. per sq. in. Diameter of Drivers, 48 in. Tractive Effort, 24,800 lbs. Heating Surface—Tubes, 1,853 sq. ft.; Firebox, 106 sq. ft.; Total, 1,959 sq. ft. Grate Area, 28.2 sq. ft. Rigid Wheel Base, 5 ft. 4 in. Total Engine Wheel Base, 33 ft. Weight on Drivers, 129,850 lbs. Total Weight of Engine, 162,650 lbs. Fuel, Oil.

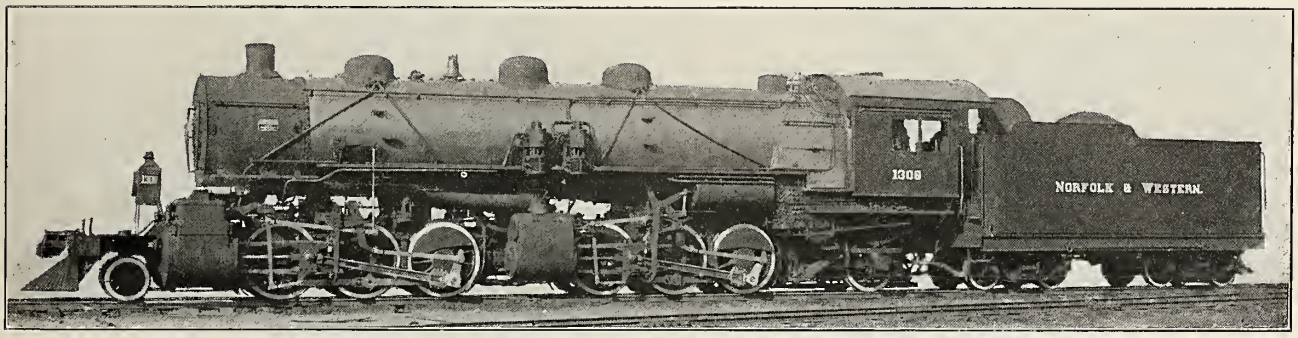

Fig. 82—Mallet Articulated (2-6-6-2) Compound Locomotive for Freight Service. Built for the Norfolk & Western by the American Locomotive Company. Cylinders, 22 in. and 35 in. x 32 in. Steam Pressure, 200 lbs. Diameter of Drivers, 56 in. Tractive Effort, 72,800 lbs. Heating Surface—Tubes, 4,655 sq. ft.; Firebox, 368 sq. ft.; Total, 5,023 sq. ft.; Superheater Surface, 995 sq. ft. Grate Area, 72.2 sq. ft. Wheel Base—Driving, 10 ft. and 10 ft.; Total, 48 ft. 10 in. Weight on Drivers, 337,300 lbs. Total Weight of Engine, 405,000 lbs. Fuel, Soft Coal.

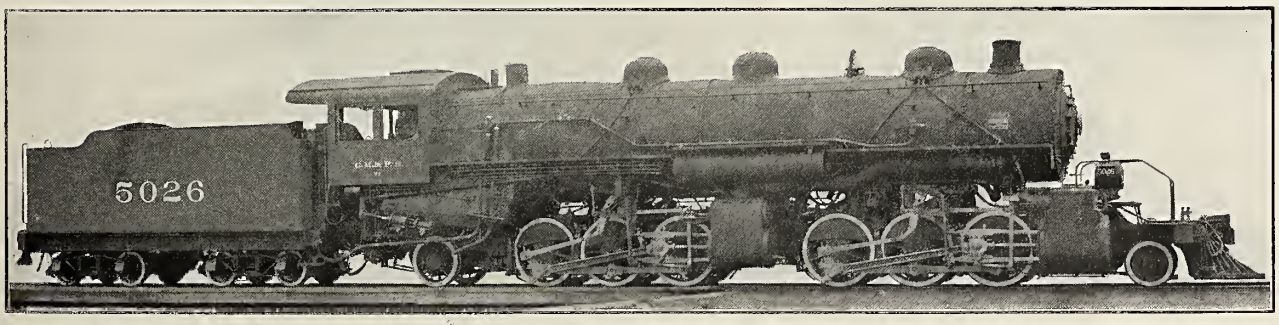

Fig. 83—Mallet Articulated (2-6-6-2) Compound Locomotive for Freight Service. Built for the Chicago, Milwaukee & Puget Sound by the American Locomotive Company. Cyls., 23½ in. and 37 in. x 30 in. Steam Pressure, 200 lbs. Dia. of Drivers, 57 in. Tractive Effort, 75,000 lbs. Heat. Sur.—Tubes, 4,898 sq. ft.; Firebox, 342 sq. ft.; Total, 5,240 sq. ft.; Superheater Surface, 1,068 sq. ft. Grate Area, 72.3 sq. ft. Rigid Wheel Base, 10 ft. Total Engine Wheel Base, 48 ft. Wt. on Drivers, 327,500 lbs. Total Wt. of Eng., 396,000 lbs. Fuel, Soft Coal.

(*See Fig.* 138 *for general drawing.*)

Fig. 84—Mallet Articulated (2-6-6-2) Compound Locomotive with Cab Ahead for Passenger Service. Built for the Southern Pacific by the Baldwin Locomotive Works.

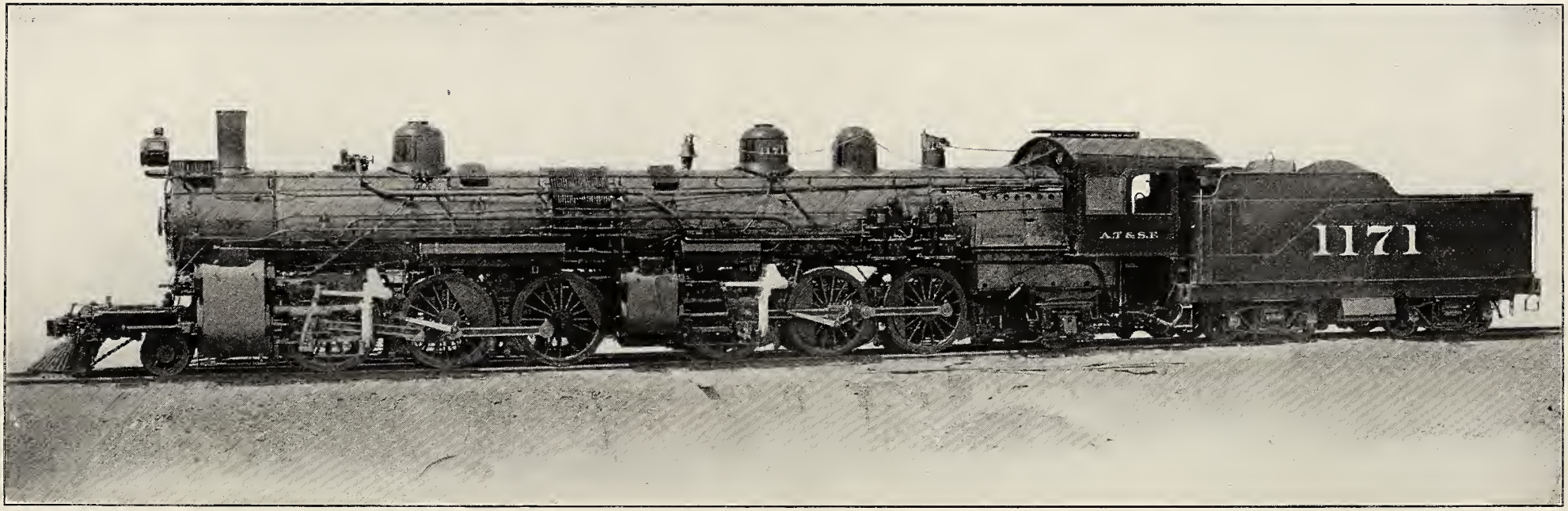

Fig. 85—Mallet Articulated (2-6-6-2) Compound Locomotive with Flexible Boiler for Freight Service. Built for the Atchison, Topeka & Santa Fe by the Baldwin Locomotive Works. Cyls., 24 in. and 38 in. x 28 in. Steam Pres., 220 lbs. Dia. Drivers, 69 in. Tractive Effort, 61,500 lbs. Heat. Sur.—Tubes, 3,376 sq. ft.; Water Tubes, 34 sq. ft.; Firebox, 200 sq. ft.; Feed Water Heater, 1,893 sq. ft.; Total, 5,503 sq. ft.; Reheating Sur., 564 sq. ft.; Superheating Sur., 390 sq. ft. Grate Area, 52.5 sq. ft. Rigid Wheel Base, 13 ft. 8 in. Total Eng. Wheel Base, 56 ft. 5 in. Wt. on Drivers, 317,300 lbs. Total Wt. of Eng., 392,300 lbs. Fuel, Soft Coal.

(See Fig. 136 for general drawing of a similar locomotive.)

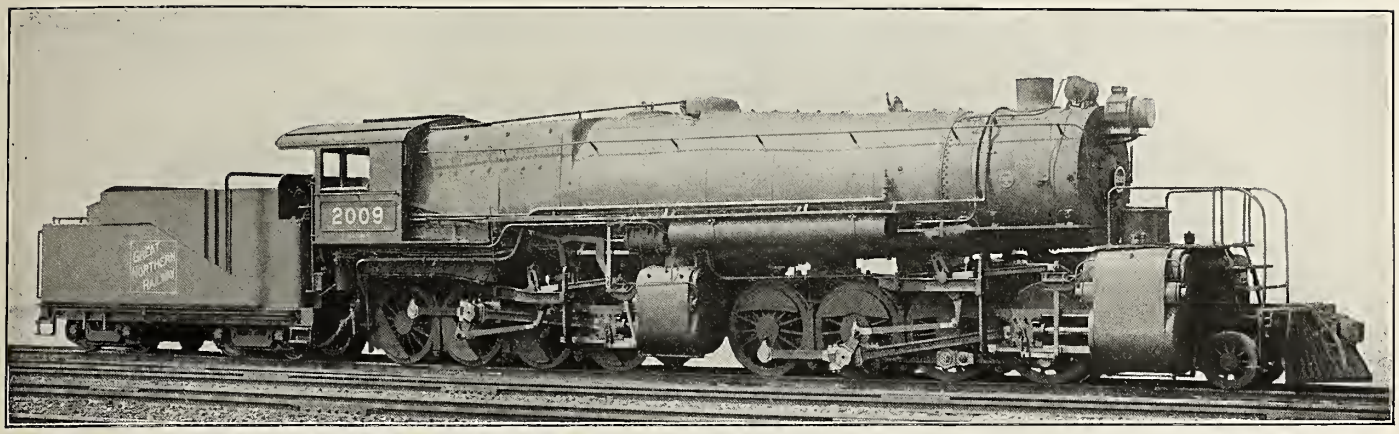

Fig. 86—Mallet Articulated (2-8-8-0) Compound Locomotive for Freight Service. Built by the Baldwin Locomotive Works for the Great Northern. Cylinders 28 in. and 42 in. x 32 in. Steam Pressure, 210 lbs. Diameter of Drivers, 63 in. Tractive Effort, 100,000 lbs. Heating Surface—Tubes, 6,120 sq. ft.; Firebox, 326 sq. ft.; Total, 6,446 sq. ft. Superheater Surface, 1,368 sq. ft. Grate Area, 78.4 sq. ft. Wheel Base—Driving, 16 ft. 6 in. and 16 ft. 6 in.; Total, 52 ft. 6 in. Weight on Drivers, 420,000 lbs. Total Weight of Engine, 450,000 lbs. Fuel, Soft Coal.

(*See Fig.* 139 *for general drawing.*)

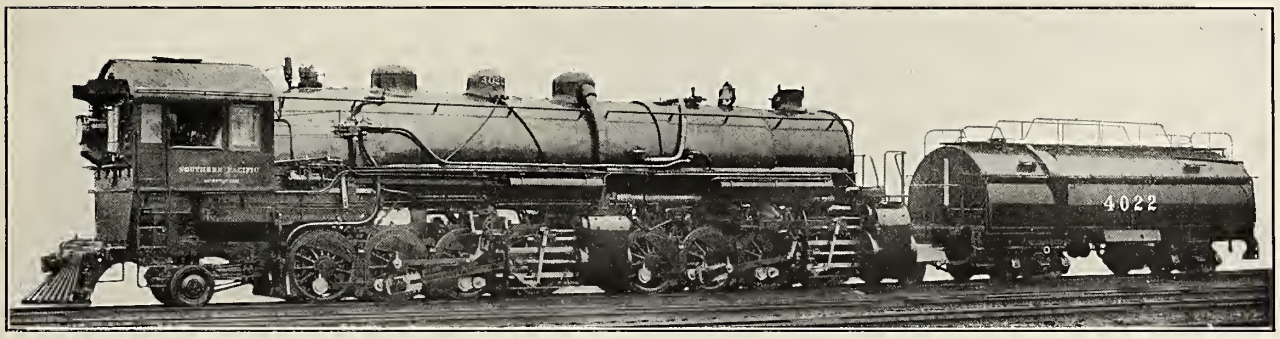

Fig. 87—Mallet Articulated (2-8-8-2) Compound Locomotive with Cab Ahead for Freight Service. Built for the Southern Pacific by the Baldwin Locomotive Works. Cylinders, 26 in. and 40 in. x 30 in. Working Steam Pressure, 200 lbs. per sq. in. Diameter of Drivers, 57 in. Tractive Effort, 85,400 lbs. Heating Surface—Tubes, 4,941 sq. ft.; Firebox, 232 sq. ft.; Feed Water Heater, 1,220 sq. ft.; Total, 6,393 sq. ft.; Reheating Surface, 625 sq. ft. Grate Area, 68.4 sq. ft. Rigid Wheel Base, 15 ft. Total Engine Wheel Base, 56 ft. 7 in. Weight on Drivers, 398,500 lbs. Total Weight of Engine, 432,600 lbs. Fuel, Oil.

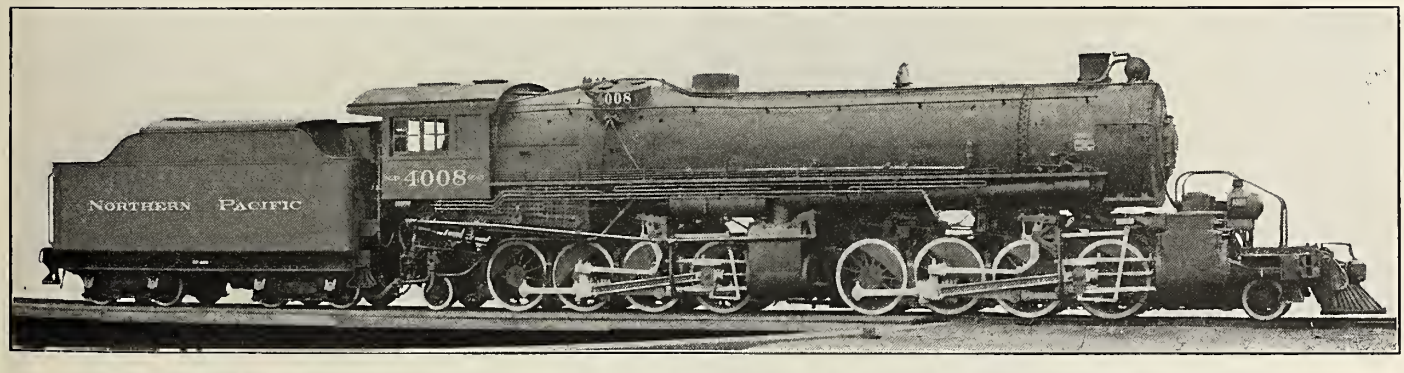

Fig. 88—Mallet Articulated (2-8-8-2) Compound Locomotive for Freight Service. Built for the Northern Pacific by the American Locomotive Company. Cylinders 26 in. and 40 in. x 30 in. Steam Pressure, 200 lbs. Diameter of Drivers, 57 in. Tractive Effort, 87,600 lbs. Heating Surface—Tubes, 5,170 sq. ft.; Firebox, 368 sq. ft.; Total, 5,538 sq. ft.; Superheater Surface 1,249 sq. ft. Grate Area, 84.3 sq. ft. Wheel Base—Driving, 15 ft. and 15 ft.; Total, 55 ft. 2 in. Weight on Drivers, 401,000 lbs. Total Weight of Engine, 462,000 lbs. Fuel, Soft Coal.

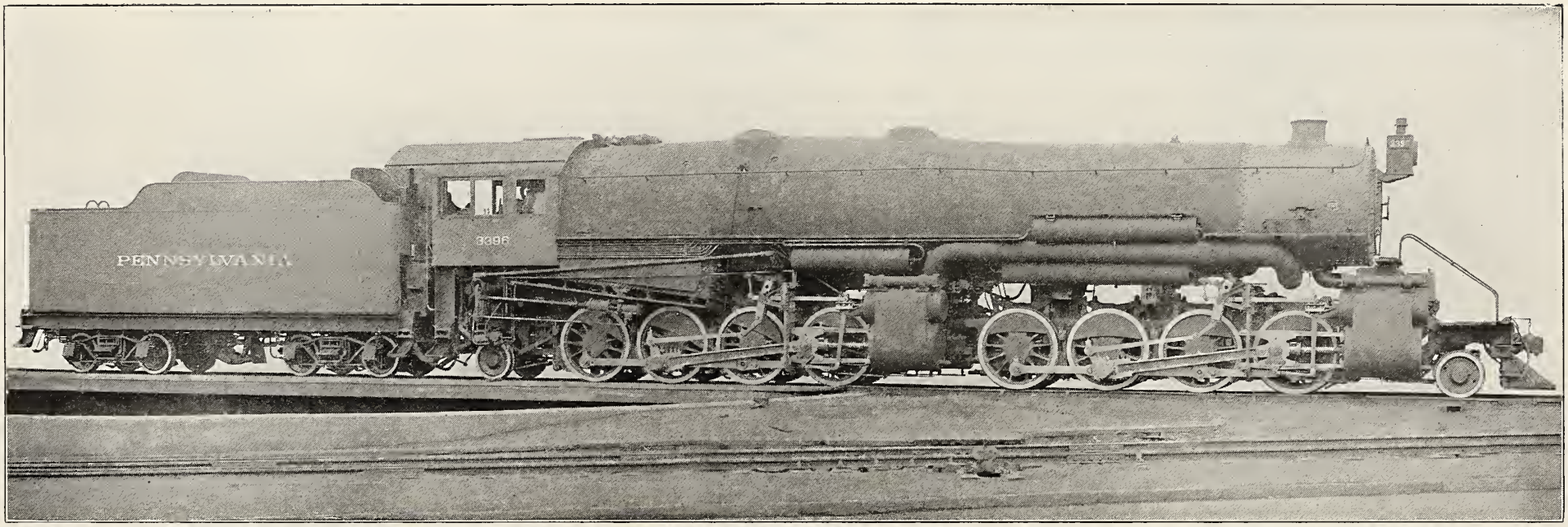

Fig. 89—Mallet Articulated (2-8-8-2) Simple Locomotive for Freight Service. Built for the Pennsylvania by the American Locomotive Co.

GENERAL DATA.

Gauge	4 ft. 8½ in.
Fuel	Soft Coal
Tractive Effort	99,200 lbs.
Weight in Working Order	483,000 lbs.
Weight on Drivers	435,500 lbs.
Weight on Leading Truck	23,500 lbs.
Weight on Trailing Truck	24,000 lbs.
Weight of Engine and Tender in Working Order	669,400 lbs.
Wheel Base, Driving	15 ft. 6 in.
Wheel Base, Total	57 ft. 5 in.
Wheel Base, Engine and Tender	88 ft. 0½ in.

RATIOS.

Weight on Drivers ÷ Tractive Effort	4.39
Total Weight ÷ Tractive Effort	4.87
Tractive Effort × Diameter Drivers ÷ Equivalent Heating Surface	693.00
Equivalent Heating Surface ÷ Grate Area	83.10
Firebox Heating Surface ÷ Equivalent Heating Surface, per cent.	5.32
Weight on Drivers ÷ Equivalent Heating Surface	54.60
Total Weight ÷ Equivalent Heating Surface	60.40
Volume Four Cylinders, cu. ft.	37.08
Equivalent Heating Surface ÷ Volume Cylinders	216.20
Grate Area ÷ Volume Cylinders	2.68

CYLINDERS.

Kind	Simple
Diameter and Stroke	27 in. x 28 in.

VALVES.

Kind	Hollow Piston
Diameter	14 in.
Greatest Travel	6 in.
Outside Lap	1 in.
Inside Lap	Line and Line
Lead in Full Gear	3/16 in.

WHEELS.

Driving, Diameter over Tires	56 in.
Driving, Thickness of Tires	3 in.
Driving Journals, Main, Diameter and Length	10½ in. x 13 in.
Driving Journals, Others, Diameter and Length	10½ in. x 13 in.
Engine Truck Wheels, Diameter	30 in.
Engine Truck, Journals	5½ in. x 12 in.
Trailing Truck Wheels, Diameter	30 in.
Trailing Truck, Journals	5½ in. x 12 in.

BOILER.

Style	Conical
Working Pressure	160 lbs.
Outside Diameter of First Ring	87⅝ in.
Firebox, Length and Width	144⅛ in. x 96¼ in.
Firebox Plates, Thickness	⅜ and ½ in.
Firebox, Water Space	F., 5½ in.; S. and B., 5 in.
Tubes, Number and Outside Diameter	282—2¼ in.
Flues, Number and Outside Diameter	45—5½ in.
Tubes, Length	24 ft. 10 in.
Heating Surface, Tubes and Flues	5,701 sq. ft.
Heating Surface, Firebox and Arch Tubes	424 sq. ft.
Heating Surface, Total	6,125 sq. ft.
Superheater Heating Surface	1,257 sq. ft.
Equivalent Heating Surface*	8,011 sq. ft.
Grate Area	96.5 sq. ft.

TENDER.

Tank	U-shape with gravity fuel slides
Frame	13 in. channels
Wheels, Diameter	33 in.
Journals, Diameter and Length	6 in. x 11 in.
Water Capacity	9,000 gals.
Coal Capacity	15 tons.

*Equivalent Heating Surface equals 6,125 sq. ft. + (1.5 × 1,257 sq. ft.) = 9,188 sq. ft.

(*See Fig.* 140 *for general drawing.*)

Fig. 90—Mallet Articulated (2-8-8-2) Compound Locomotive for Freight Service. Built for the Virginian by the American Locomotive Company.

GENERAL DATA.

Gauge	4 ft. 8½ in.
Fuel	Soft Coal
Tractive Effort	115,000 lbs.
Weight in Working Order (Estimated)	540,000 lbs.
Weight on Drivers (Estimated)	479,200 lbs.
Weight on Trucks (Estimated)	70,800 lbs.
Weight of Engine and Tender in Working Order (Estimated)	752,000 lbs.
Wheel Base, Driving	15 ft. 6 in.
Wheel Base, Total	57 ft. 4 in.

RATIOS.

Weight on Drivers ÷ Tractive Effort	4.16
Total Weight ÷ Tractive Effort	4.69
Tractive Effort × Diameter Drivers ÷ Heating Surface*	738.00
Total Heating Surface* ÷ Grate Area	88.00
Firebox Heating Surface ÷ Total Heating Surface*, per cent.	4.69
Weight on Drivers ÷ Total Heating Surface*	54.90
Total Weight ÷ Total Heating Surface*	61.70
Volume Equivalent Simple Cylinders, cu. ft.	34.44
Total Heating Surface* ÷ Volume Cylinders	254.00
Grate Area ÷ Volume Cylinders	2.89

CYLINDERS.

Kind	Compound
Diameter and Stroke	28 in. and 44 in. x 32 in.

WHEELS.

Driving, Diameter Over Tires	56 in.
Driving Journals, Main, Diameter and Length	11 in. x 13 in.
Driving Journals, Others, Diameter and Length	11 in. x 13 in.
Engine Truck Wheels, Diameter	30 in.
Engine Truck, Journals	6½ in. x 13 in.
Trailing Truck Wheels, Diameter	30 in.
Trailing Truck, Journals	6½ in. x 13 in.

BOILER.

Style	Wagon Top
Working Pressure	200 lbs.
Outside Diameter of First Ring	100 in.
Outside Diameter of Largest Ring	112 in.
Firebox, Length and Width	174 in. x 109 in.
Firebox Plates, Thickness	⅜ in. and 9/16 in.
Firebox, Water Space	F., 5½ in.; S. and B., 5 in
Tubes, Number and Outside Diameter	334—2¼ in.
Flues, Number and Outside Diameter	48—5½ in.
Tubes, Length	24 ft.
Heating Surface, Tubes and Flues	6,350 sq. ft.
Heating Surface, Firebox	410 sq. ft.
Heating Surface, Total	6,760 sq. ft.
Superheater Heating Surface	1,310 sq. ft.
Equivalent Heating Surface*	8,720 sq. ft.
Grate Area	99.2 sq. ft.
Smoke Stack, Height Above Rail	16 ft. 5⅛ in.
Centre of Boiler Above Rail	10 ft. 7½ in.

TENDER.

Wheels, Diameter	33 in.
Journals, Diameter and Length	6 in. x 11 in.
Water Capacity	12,000 gals.
Coal Capacity	15 tons

*Equivalent Heating Surface Equals 6,760 sq. ft. + (1.5 × 1,310 sq. ft.) = 8,720 sq. ft.

(*See Fig.* 141 *for general drawing.*)

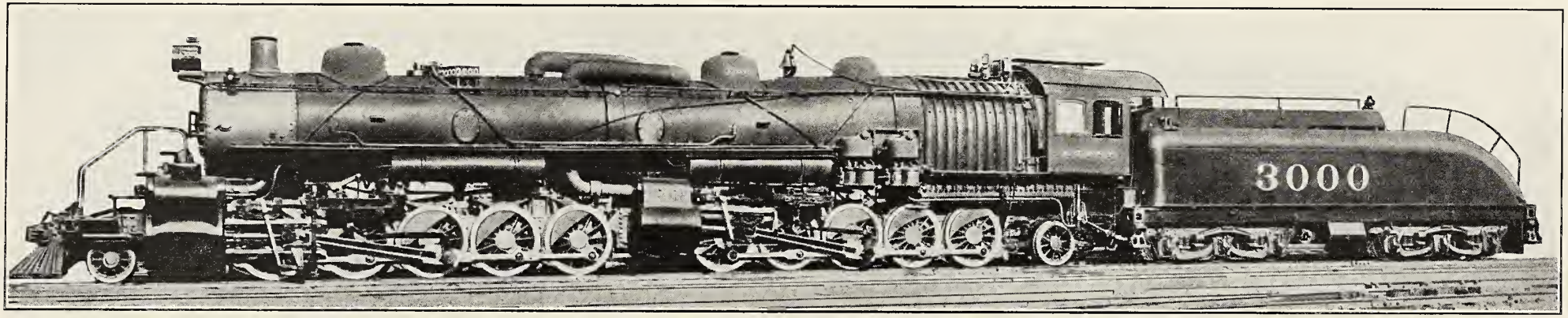

Fig. 91—Mallet Articulated (2-10-10-2) Compound Locomotive for Freight Service. Built by the Atchison, Topeka & Santa Fe and the Baldwin Locomotive Works.

GENERAL DATA.

Gage	4 ft. 8½ in.
Service	Freight
Fuel	Oil
Tractive Effort	111,000 lbs.
Weight in Working Order	616,000 lbs.
Weight on Drivers	550,000 lbs.
Weight of Engine and Tender in Working Order	850,000 lbs.
Wheel Base, Driving	49 ft. 11 in.
Wheel Base, Total	66 ft. 5 in.
Wheel Base, Engine and Tender	108 ft. 1⅝ in.

RATIOS.

Weight on Drivers ÷ Tractive Effort	4.95
Total Weight ÷ Tractive Effort	5.55
Tractive Effort × Diameter Drivers ÷ Heating Surface	963.00
Total Heating Surface ÷ Grate Area	80.40
Firebox Heating Surface ÷ Total Heating Surface, per cent.	4.48
Weight on Drivers ÷ Total Heating Surface	83.60
Total Weight ÷ Total Heating Surface	93.70
Volume Equivalent Simple Cylinders, cu. ft	30.10
Total Heating Surface ÷ Volume Cylinders	219.0
Grate Area ÷ Volume Cylinders	2.72

CYLINDERS.

Kind	Compound
Diameter	28 in. and 38 in.
Stroke	32 in.

VALVES.

Kind	Piston
Diameter	13 in. and 15 in.

WHEELS.

Driving, Diameter Over Tires	57 in.
Driving Journals, Main, Diameter and Length	11 in. x 12 in.
Driving Journals, Others, Diameter and Length	10 in. x 12 in.
Engine Truck, Journals	6½ in. x 10½ in.
Trailing Truck, Journals	7½ in. x 11⅞ in.

BOILER.

Style	Ext. Wagon Top
Working Pressure	225 lbs.
Firebox, Length and Width	149⅝ in. x 78¾ in.
Tubes, Number and Outside Diameter	377—2¼ in.
Tubes, Length	16 ft. 5 in.
Heating Surface, Tubes	3,625 sq. ft.
Heating Surface, Firebox	294.50 sq. ft.
Heating Surface, Feedwater Heater	2,659.50 sq. ft.
Heating Surface, Total	6,579 sq. ft.
Superheater Heating Surface	2,328 sq. ft.
Heating Surface, Equivalent*	8,907 sq. ft.
Grate Area	81.90 sq. ft.

TENDER.

Tank	Water Bottom
Frame	12 in. and 15 in. chan.
Wheels, Diameter	34¼ in.
Journals, Diameter and Length	5½ in. x 10 in.
Water Capacity	12,000 gals.
Oil Capacity	4,000 gals.

*Total Heating Surface plus the Superheating and Re-heating Surface.

(*See Fig.* 142 *for general drawing.*)

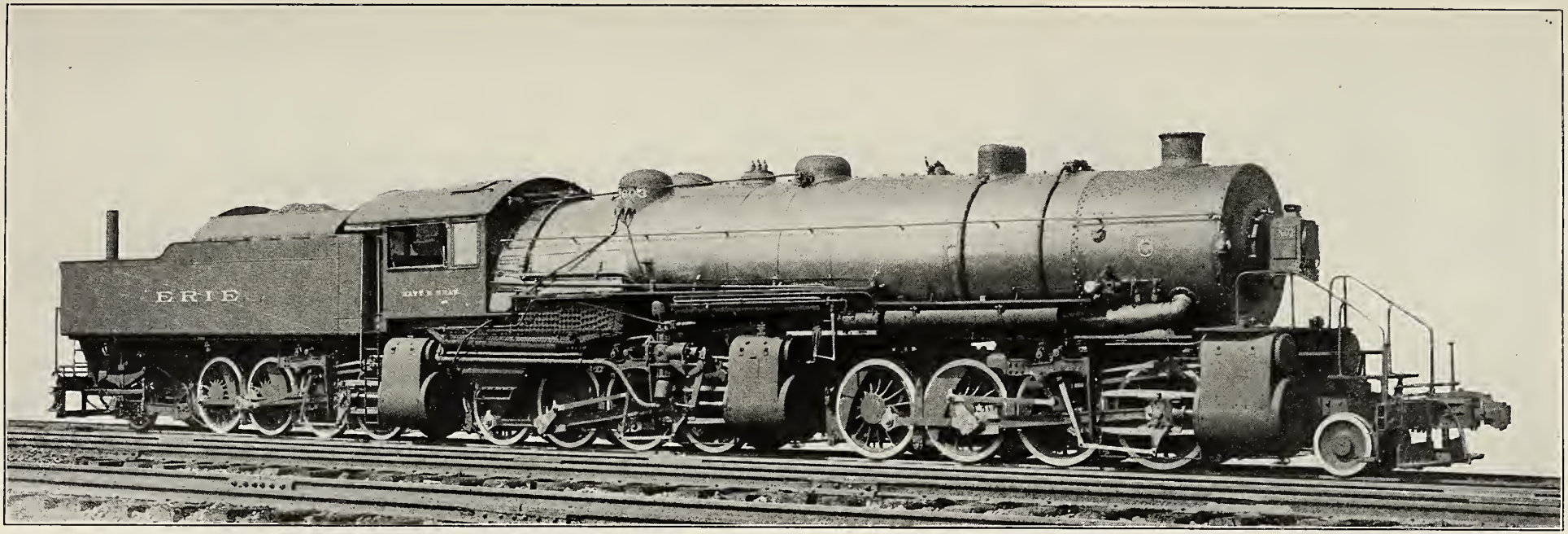

Fig. 92—Mallet Articulated Triplex (2-8-8-8-2) Compound Locomotive for Freight Service. Built for the Erie by the Baldwin Locomotive Works.

GENERAL DATA.

Gage	4 ft. 8½ in.
Fuel	Soft Coal
Tractive Effort	160,000 lb.
Weight in Working Order	853,050 lb.
Weight on Drivers	761,600 lb.
Weight on Leading Truck	32,050 lb.
Weight on Trailing Truck	59,400 lb.
Weight of Engine and Tender in Working Order	853,050 lb.
Wheel Base, Driving	71 ft. 6 in.
Wheel Base, Total	90 ft. 0 in.
Wheel Base, Engine and Tender	90 ft. 0 in.

RATIOS.

Weight on Drivers ÷ Tractive Effort	4.76
Total Weight ÷ Tractive Effort	5.33
Tractive Effort × Diameter Drivers ÷ Equivalent Heating Surface*	1,088.30
Equivalent Heating Surface* ÷ Grate Area	102.90
Firebox Heating Surface ÷ Equivalent Heating Surface,* per cent.	5.07
Weight on Drivers ÷ Equivalent Heating Surface*	82.20
Total Weight ÷ Equivalent Heating Surface*	92.10
Volume Equivalent Simple Cylinders	51.30 cu. ft.
Equivalent Heating Surface* ÷ Volume Cylinders	180.50
Grate Area ÷ Volume Cylinders	1.75

CYLINDERS.

Kind	2 h.p. and 4 l.p.-Compound
Diameter and Stroke	36 in. x 32 in.

VALVES.

Kind	Piston
Diameter	16 in.

WHEELS.

Driving, Diameter Over Tires	63 in.
Driving, Thickness of Tires	3½ in.
Driving Journals, Main, Diameter and Length	11 in. x 13 1/16 in.
Engine Truck Wheels, Diameter	33½ in.
Engine Truck, Journals	6 in. x 12 in.
Trailing Truck Wheels, Diameter	42 in.
Trailing Truck, Journals	9 in. x 14 in.

BOILER.

Style	Conical
Working Pressure	210 lbs. per sq. in.
Outside Diameter of First Ring	94 in.
Firebox, Length and Width	162 in. x 108 in.
Firebox Plates, Thickness	⅜ in. and ⅝ in.
Firebox, Water Space	5 in. and 6 in.
Tubes, Number and Outside Diameter	326—2¼ in.
Flues, Number and Outside Diameter	53—5½ in.
Tubes and Flues, Length	24 ft.
Heating Surface, Tubes and Flues	6,418 sq. ft.
Heating Surface, Firebox	468 sq. ft.
Heating Surface, Total	6,886 sq. ft.
Superheater Heating Surface	1,584 sq. ft.
Equivalent Heating Surface*	9,262 sq. ft.
Grate Area	90 sq. ft.

TENDER.

Water Capacity	10,000 gal.
Coal Capacity	16 tons

*Equivalent Heating Surface equals total evaporative heating surface plus 1.5 times the superheating surface.

(*See Fig.* 137 *for general drawing*)

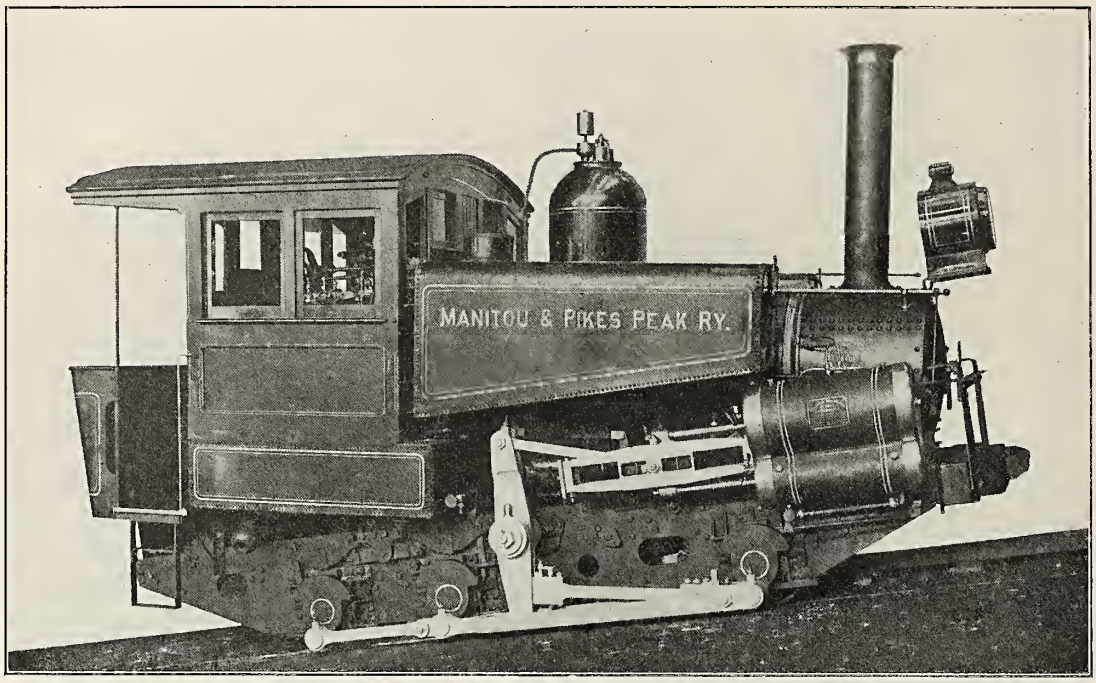

Fig. 93—Vauclain Compound Rack Locomotive for Mountain Service. Built for the Manitou & Pikes Peak by the Baldwin Locomotive Works. Cylinders, 10 in. and 15 in. x 24 in. Working Steam Pressure, 210 lbs. per sq. in. Diameter of Drivers on Pitch Line, 22 468/1000 in. Tractive Effort, 25,284 lbs. Heating Surface—Tubes, 547 sq. ft.; Firebox, 58 sq. ft.; Total, 605 sq. ft. Grate Area, 19.7 sq. ft. Rigid Wheel Base, 10 ft. 3 59/64 in. Total Wt. of Eng., 60,000 lbs. Fuel, Oil.

(*See Fig.* 144 *for general drawing.*)

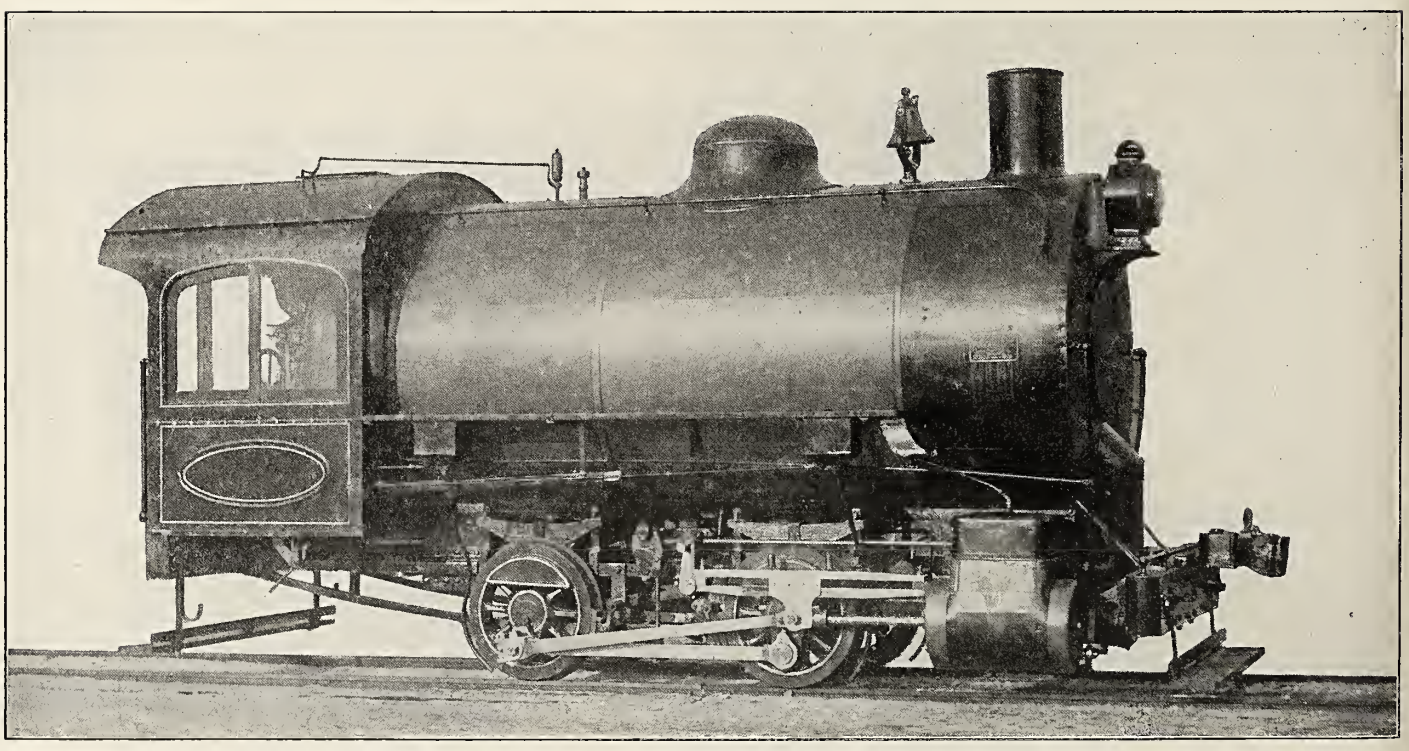

Fig. 94—Four-Wheel (0-4-0) Fireless, or Steam Storage, Locomotive for Switching Service. Built for the National Cash Register Company by the Lima Locomotive Corporation. Cylinders, 18 in. x 18 in. Steam Storage Pressure, 155 lbs. per sq. in. Working Steam Pressure, 60 lbs. per sq. in. Diameter of Drivers, 36 in. Tractive Effort, 9,720 lbs. Boiler—Diameter, 84 in.; Length, 16 ft.; Capacity, 530 cu. ft. Rigid Wheel Base, 6 ft. Total Length Over-All, 22 ft. 6½ in. Weight on Drivers, 77,100 lbs. Factor of Adhesion, 7.94 to 5.60.

(*See Fig.* 145 *for general drawing.*)

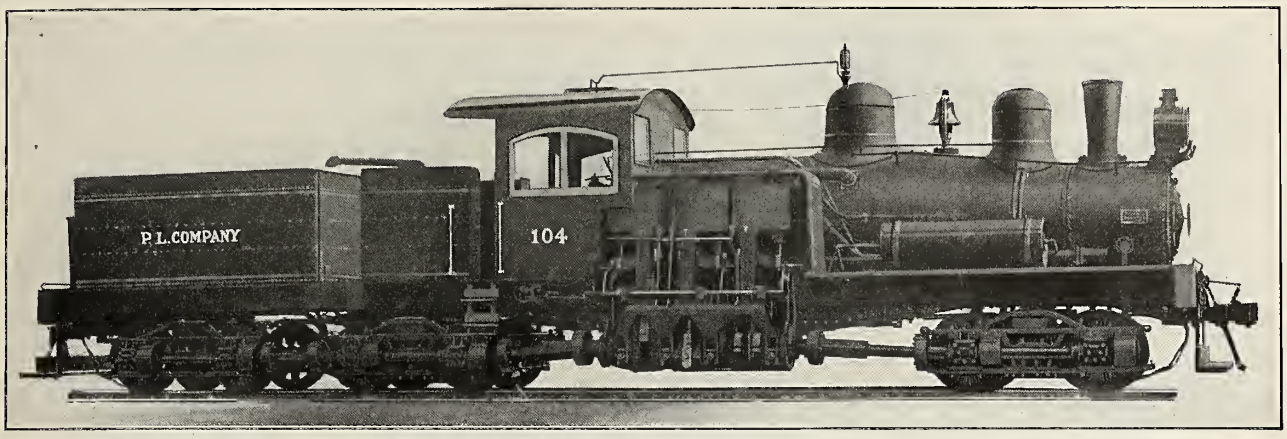

Fig. 95—Twelve-Wheel Shay Geared Locomotive for Logging Service. Built for the Potlach Lumber Company by the Lima Locomotive Corporation. Three Cylinders, 12 in. x 14 in. Working Steam Pressure, 200 lbs. per sq. in. Diameter of Drivers, 36 in. Tractive Effort, 30,350 lbs. Heating Surface—Tubes, 886 sq. ft.; Firebox, 93 sq. ft.; Total, 989 sq. ft. Grate Area, 27.1 sq. ft. Rigid Wheel Base, 4 ft. 9 in. Total Engine Wheel Base, 40 ft. 11 in. Weight on Drivers, 150,000 lbs. Total Weight of Engine 150,000 lbs. Fuel, Soft Coal.

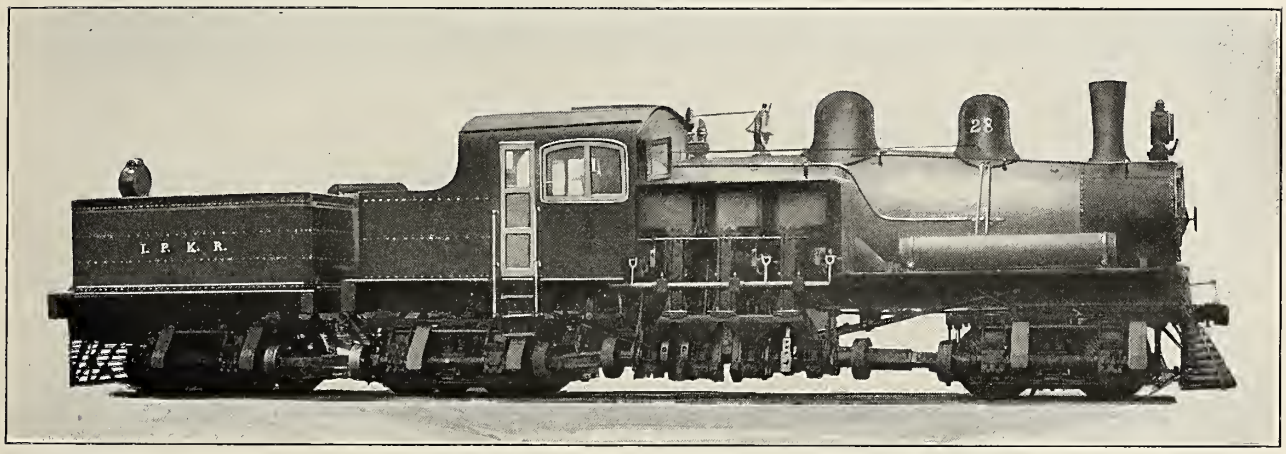

Fig. 96—Twelve-Wheel Shay Geared Locomotive for Freight Service. Built for the Imperial-Kalgan Railway by the Lima Locomotive Corporation. Three Cylinders, 15 in. x 17 in. Working Steam Pressure, 200 lbs. per sq. in. Diameter of Drivers, 40 in. Tractive Effort, 44,100 lbs. Heating Surface—Tubes, 1,720 sq. ft.; Firebox, 145 sq. ft.; Total, 1,865 sq. ft. Grate Area, 38.82 sq. ft. Rigid Wheel Base, 45 ft. 6. in. Weight on Drivers, 215,000 lbs. Total Weight of Engine, 215,000 lbs. Fuel, Soft Coal.

(*See Fig.* 143 *for general drawing.*)

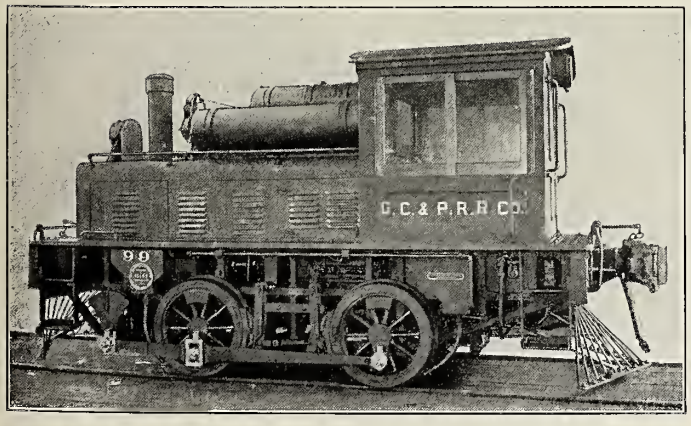

Fig. 97—Gasolene Locomotive for Switching Service. Built for the Georgia Coast & Piedmont by the Baldwin Locomotive Works. Gage, 4 ft. 8½ in. Weight, 14,000 lbs.

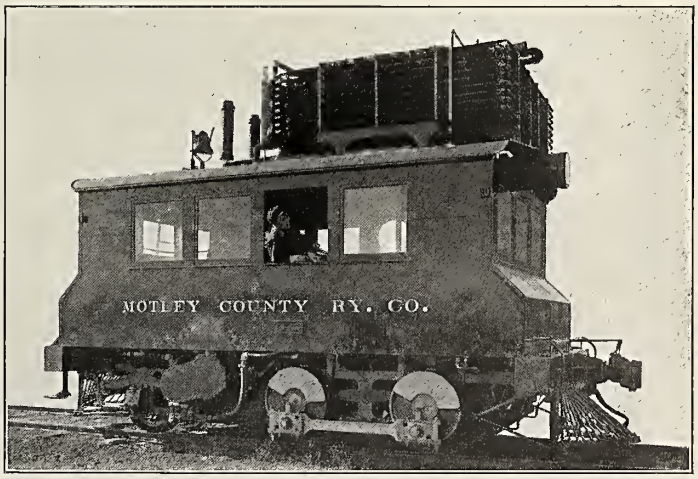

Fig. 98—Gasolene Locomotive for Switching Service. Built for the Motley County Railway by the McKeen Motor Car Company. Gage 4 ft. 8½ in. Tractive Effort, 12,000 lbs.

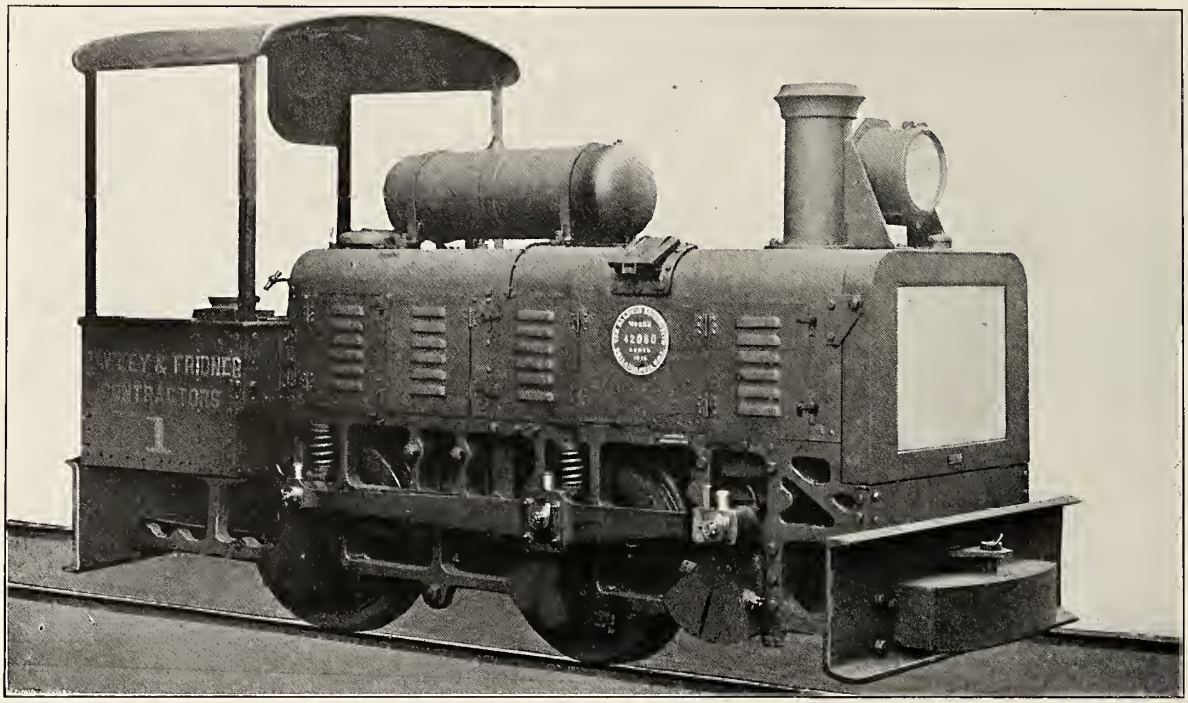

Fig. 99—Gasolene Industrial Locomotive. Built for Hawley & Fridner, Contractors, by the Baldwin Locomotive Works. Gage, 24 in. Weight, 10,000 lbs. Motor, 35 Horse Power, Four Cylinder and Four Cycle. Cylinders, 5 in. x 6 in.

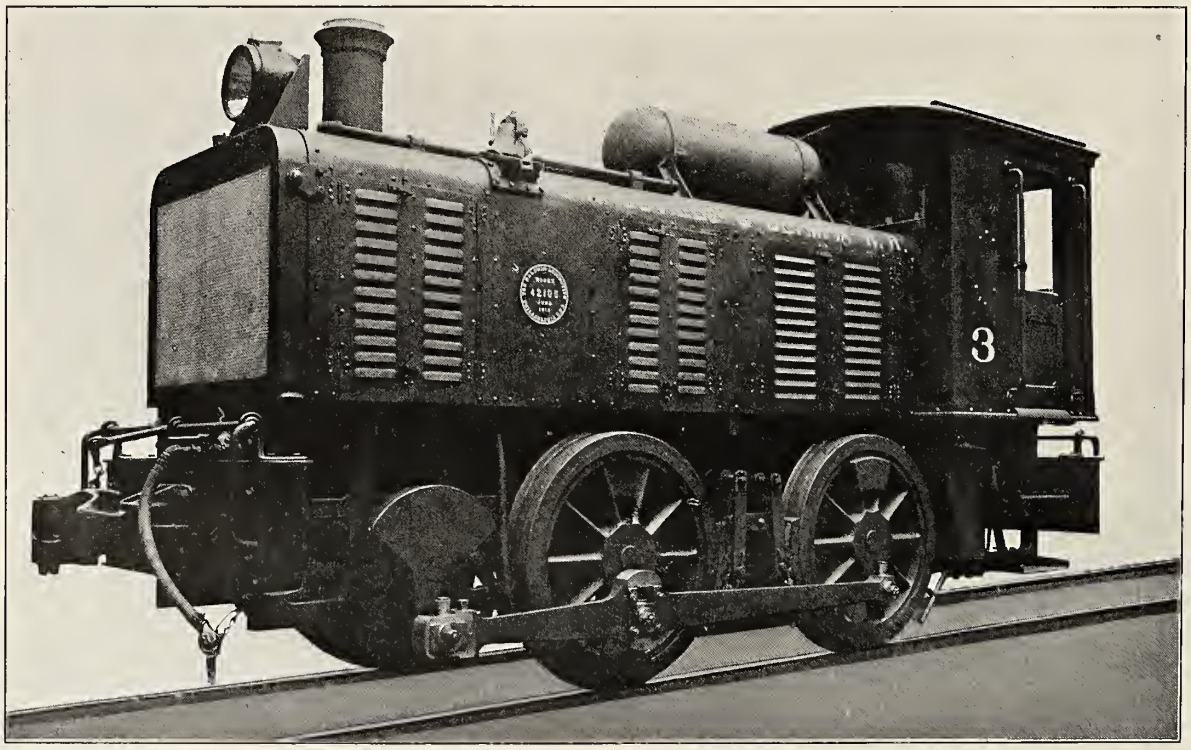

Fig. 100—Gasolene Industrial Locomotive. Built for the Owingsville & Olympia R. R., by the Baldwin Locomotive Works. Gage, 3 ft. Weight, 18,000 lbs. Motor, 65 Horse Power, Four Cylinder and Four Cycle. Cylinders, 6½ in. x 8 in.

Names of Parts of Locomotives.

1 *Headlight*
2 *Headlight Dynamo and Turbine*
3 *Headlight Bracket*
4 *Smoke Stack*
5 *Smokebox Front*
6 *Handrail*
7 *Smokebox Cleaning Hole Cover*
8 *Cinder Valve and Pipe or Chute*
9 *Steam Pipe*
10 *Cylinder Saddle*
11 *Steam Chest or Valve Chamber*
12 *Steam Chest Head or Cover*
13 *Cylinder*
14 *Cylinder Head Casing*
15 *Bumper*
16 *Bumper Channel*
17 *Front Frame*
18 *Front Truck Wheel*
19 *Front Truck Frame*
20 *Front Truck Pedestal*
21 *Front Truck Journal Box*
23 *Front Truck Axle*
24 *Front Truck Pedestal Tie Bar*
25 *Front Truck Frame Cross Tie*
26 *Front Truck Equalizer*
27 *Front Truck Spring*
28 *Front Truck Spring Hanger*
30 *Valve Stem*
31 *Valve Rod*
32 *Valve Stem Gland*
33 *Valve Rod Pin*
34 *Piston Rod*
35 *Crosshead*
36 *Crosshead Shoe or Gib*
37 *Rocker*
38 *Rocker Pin*
39 *Guide Yoke*
40 *Guide Yoke Knee or Angle*
41 *Waist Sheet or Buckle Plate*
42 *Waist Sheet Angle*
43 *Cylinder Cock Bell Crank*
45 *Running Board*
46 *Sandbox*
47 *Sandbox Cap*
48 *Sandbox Step*
49 *Boiler Check Valve*
50 *Injector Delivery or Boiler Feed Pipe*
51 *Injector Delivery Pipe Bracket*
52 *Hand Rail Post or Bracket*
53 *Front Tube Sheet*
54 *Dry Pipe*
55 *Boiler Lagging*
56 *Boiler Jacket*
57 *Bell*
58 *Bell Stand*
59 *Bell Yoke*
60 *Driver Brake Cylinder*
61 *Transmission Bar*
62 *Transmission Bar Hanger*
64 *Link*
65 *Link Hanger*
66 *Reverse Shaft Arm*
67 *Reverse Shaft Lever*
68 *Reverse, Tumbling or Lifting Shaft*
69 *Reverse Shaft Bearing*
70 *Driving Box*
71 *Driving Box Brass*
72 *Driving Axle*
73 *Driving Box Cellar*
74 *Frame Pedestal*
75 *Pedestal Brace or Binder*
76 *Frame Brace or Filling*
77 *Top Frame Rail*
78 *Bottom Frame Rail*
79 *Driving Spring Hanger Stirrup*
80 *Driving Spring*
81 *Driving Spring Seat*
82 *Driving Spring Hanger*
83 *Driving Spring Hanger Bracket*
84 *Driver Equalizer*
85 *Driver Equalizer Bracket, Post or Fulcrum*
87 *Reverse Shaft Counterbalance Spring Rod*
88 *Reverse Shaft Counterbalance Spring Case*
89 *Dry Pipe Hanger*
90 *Dome*
91 *Dome Lagging*
92 *Dome Casing*
93 *Dome Casing Cap*
94 *Dome Cover or Lid*
95 *Throttle Stand Pipe*
96 *Throttle Valve Casing*
97 *Throttle Valve*
98 *Throttle Valve Stem*
99 *Throttle Bell Crank*
100 *Turret Dry Pipe*
102 *Safety Valve or Auxilliary Dome*
103 *Back Tube Sheet*
104 *Air Pump or Compressor*
105 *Throat Sheet*
106 *Washout Plug Hole*
107 *Driver and Trailing Truck Equalizer*
108 *Driver and Trailing Truck Equalizer Bracket*
109 *Ashpan*
110 *Ashpan Hopper*
111 *Ashpan Hopper Slide*
112 *Ashpan Hopper Slide Hanger*
113 *Ashpan Hopper Slide Arm*
114 *Driving Wheel*
115 *Trailing Truck Wheel*
116 *Trailing Truck Journal Box*
117 *Trailing Truck Pedestal*
118 *Trailing Truck Spring*
119 *Trailing Truck Spring Hanger*
120 *Trailing Truck Spring Hanger Bracket*
121 *Rear Frame*
122 *Tail Piece*
123 *Chafing Plate or Block*
124 *Reverse Lever Bracket*
125 *Reverse Lever*
126 *Reach Rod*
127 *Crownsheet*
128 *Doorsheet or Backsheet of Firebox*
129 *Backhead of Boiler*
130 *Firedoor Opening*
131 *Foot Board*
132 *Reverse Lever Quadrant*
133 *Reverse Lever Quadrant Bracket*
134 *Cab*
135 *Cab Window Sash*
136 *Cab Ventilator*
137 *Turret, Fountain or Combination Stand*
138 *Number Plate*
139 *Headlight Step*
140 *Smokebox Cleaning Hole*
141 *Steam Chest Relief Valve*
142 *Low Pressure Cylinder*
143 *High Pressure Cylinder*
144 *Pilot*
145 *Bumper Brace*
146 *Pilot Bracket*
147 *Front Truck Radius Bar*
148 *Front Driver and Truck Equalizer*
149 *Guide*
150 *Manhole Cover*
151 *Driving Box Saddle*
152 *Driving Box Yoke*

Names of Parts of Locomotives (continued).

153 *Safety Valve*
154 *Whistle*
155 *Intermediate Driving Spring*
156 *Main Air Reservoir or Drum*
157 *Expansion Bracket or Pad*
158 *Ashpan Slide Connection*
159 *Cab Hand Hold*
160 *Steam Gage Plate or Stand*
161 *Cab Window Opening*
162 *Cab Roof*
163 *Cab Roof Water Gutter*
164 *Ashpan Bell Crank*
165 *Smokebox Crane*
166 *Smokebox Crane Bracket*
167 *Smokebox Crane Traveler*
168 *Exhaust Nozzle*
169 *Exhaust Nozzle Damper*
170 *Back Pressure Brake Exhaust Pipe*
171 *Cylinder Cock Lever*
172 *Running Board Bracket*
173 *Driver and Truck Equalizer Fulcrum*
174 *Driver and Truck Equalizer Pin*
175 *Smokebox*
176 *Boiler*
177 *Side Rod Crankpin*
178 *Main Crankpin*
179 *Eccentric*
180 *Main Reservoir Hanger*
181 *Cab Front Window*
182 *Cab Back Window*
183 *Throttle Lever*
184 *Suction or Feed Pipe Bracket or Support*
185 *Suction or Feed Pipe*
186 *Injector*
187 *Injector Overflow Pipe*
188 *Sander*
189 *Sand Pipe*
190 *Pilot Coupler*
192 *Coupler Release Rod or Unlocking Lever*
193 *Coupler Pocket*
194 *Flag Staff*
195 *Flag Staff Base*
196 *Pilot Brace*
197 *Front Step*
199 *Fireman's or Rear Cab*
203 *Front Boiler Brace*
204 *Driver Brake Lever*
208 *Driving Spring Hanger Gib*
209 *Transverse Equalizer*
210 *Engine Step or Cab Step*
211 *Cab Apron*
212 *Cab Apron Hinge*
213 *Tee Head or Nigger Head*
216 *Front Truck Box Yoke*
217 *Front Truck Pivot Pin or Center Pin*
218 *Front Truck Center Casting or Bumper Casting*
219 *Driving Box Shoe*
220 *Equalizer Safety Strap*
222 *Foot Plate or Deck Plate*
223 *Gage Cock Hole*
224 *Blow-off Cock*
225 *Handhold*
226 *Buffer*
229 *Cab Step*
230 *Cab Overhang*
231 *Whistle Lever*
232 *Whistle Lever Connection*
233 *Vertical Shaft for Ashpan Slide*
234 *Cab Brace*
236 *Firedoor Frame*
237 *Cylinder Cock Shaft*
238 *Smokebox or Front End Door*
239 *Rocker Box*
240 *Cab Roof Carline*
248 *Injector Steam Pipe*
250 *Blower Pipe*
254 *Top Cab Bracket*
255 *Bottom Cab Bracket*
256 *Saddle Tank*
257 *Eccentric Crank*
258 *Eccentric Rod*
259 *Link Support*
260 *Radius Rod*
261 *Combination Lever*
262 *Union Link*
263 *Crosshead Arm*
264 *Bell Ringer Bracket*
265 *Petticoat Pipe*
266 *Tank Filling Hole*
267 *Coal Bunker*
268 *Expansion Crosstie*
269 *Sander Lever*
270 *Cylinder Cock Operating Lever*
271 *Eccentric Strap*
272 *Superheater Damper Cylinder*
273 *Dry Pipe Elbow*
274 *Air Pump or Compressor Bracket*
275 *Arm Rest*
276 *Reach Rod Guide*
277 *Tool Box*
278 *Valve Rod Guide*
279 *Valve Rod Crosshead*
280 *Tank Equalizing Pipe*
281 *Reverse Screw*
282 *Reverse Screw Wheel*
283 *Reverse Screw Support*
284 *Lubricator Dry Pipe*
285 *Grate Shaft*
286 *Trailing Truck Adjusting Spring Case*
287 *Drop or Dump Grate Catch*
288 *Driving Box Wedge*
289 *Piston Rod Extension Guide*
290 *Power Reverse Reach Rod*
291 *Power Reverse Cylinder*
292 *Exhaust Pipe Base*
293 *Receiver Pipe*
294 *Low Pressure Exhaust Pipe*
295 *Exhaust Pipe Expansion or Slip Joint*
296 *High Pressure Exhaust Pipe*
297 *High Pressure Steam Pipe Expansion or Slip Joint*
298 *Steam Pipe Support*
299 *Receiver Pipe Connection*
300 *Bottom Draw Casting*
301 *Main Boiler Bearing Saddle*
302 *Boiler Bearing Plate*
303 *Boiler Centering Device*
304 *Front Boiler Bearing Saddle*
305 *Front Boiler Bearing*
306 *Combustion Chamber*
307 *Line Check Valve*
308 *Smoke Stack Extension*
309 *Pneumatic Cylinder Cock Operating Cylinder*
310 *Ashpan Dump Cylinder*
311 *Steam Grate Shaker Cylinder*
312 *Grate Shaker Shaft*
313 *Stoker Elevator Pipe*
314 *Stoker Distributor Pipe*
315 *Stoker Distributor*
316 *Stoker Lower Hopper*
317 *By-Pass or Drifting Valve Case*
318 *Slipping Throttle*
319 *Slipping Throttle Reach Rod*
320 *Slipping Throttle Lever*
321 *Radius Rod Hanger*

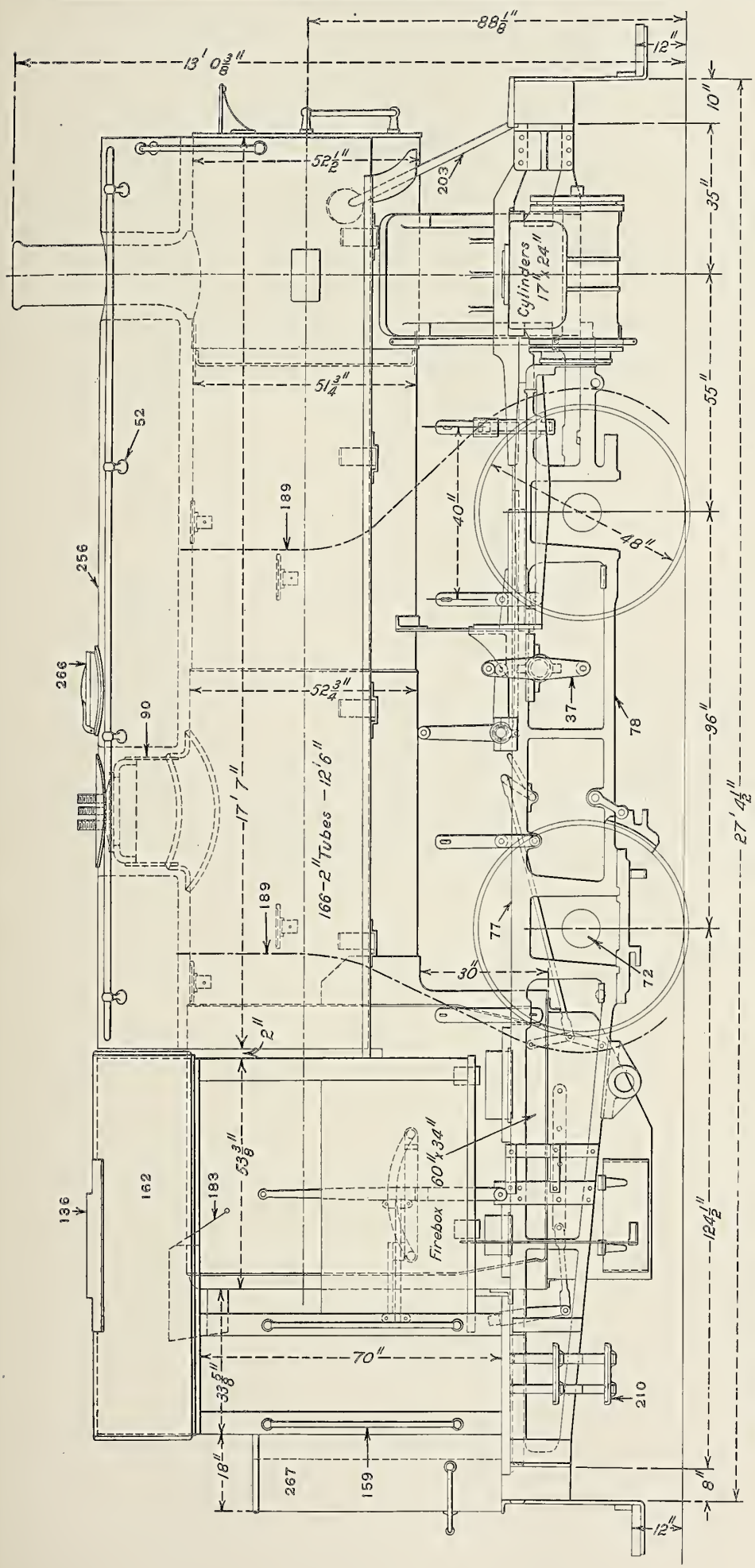

Fig. 101—Four-Wheel (0-4-0) Locomotive for Switching Service. Built for the Andrews Steel Company by the Lima Locomotive Corporation.

GENERAL DATA.

Gage	4 ft. 8½ in.
Fuel	Soft Coal
Tractive Effort	22,110 lbs.
Weight in Working Order	102,800 lbs.
Weight on Drivers	102,800 lbs.
Wheel Base, Total	8 ft.

RATIOS.

Weight on Drivers ÷ Tractive Effort	4.64
Tractive Effort × Diameter Drivers ÷ Heating Surface	886.00
Total Heating Surface ÷ Grat Area	53.90
Firebox Heating Surface ÷ Total Heating Surface, per cent.	12.00
Weight on Drivers ÷ Total Heating Surface	88.30
Volume Both Cylinders, cu. ft.	6.34
Total Heating Surface ÷ Volume Cylinders	184.17
Grate Area ÷ Volume Cylinders	2.20

CYLINDERS.

Kind	Simple
Diameter and Stroke	17 in. x 24 in.

VALVES.

Kind	Balanced Slide
Greatest Travel	5⅜ in.

WHEELS.

Driving, Diameter Over Tires	48 in.
Driving Journals, Diameter and Length	9 in. x 9 in.

BOILER.

Style	Straight Top
Working Pressure	180 lbs.
Outside Diameter of First Ring	51¾ in.
Firebox, Length and Width	60 in. x 34 in.
Heating Surface, Tubes	1,079.7 sq. ft.
Heating Surface, Firebox	88.0 sq. ft.
Heating Surface, Total	1,167.7 sq. ft.
Grate Area	14 sq. ft.
Water Capacity, Tank	2,000 gals.
Coal Capacity, Bunker	2 tons

Numbers Refer to Names of Parts on Pages 191-192.

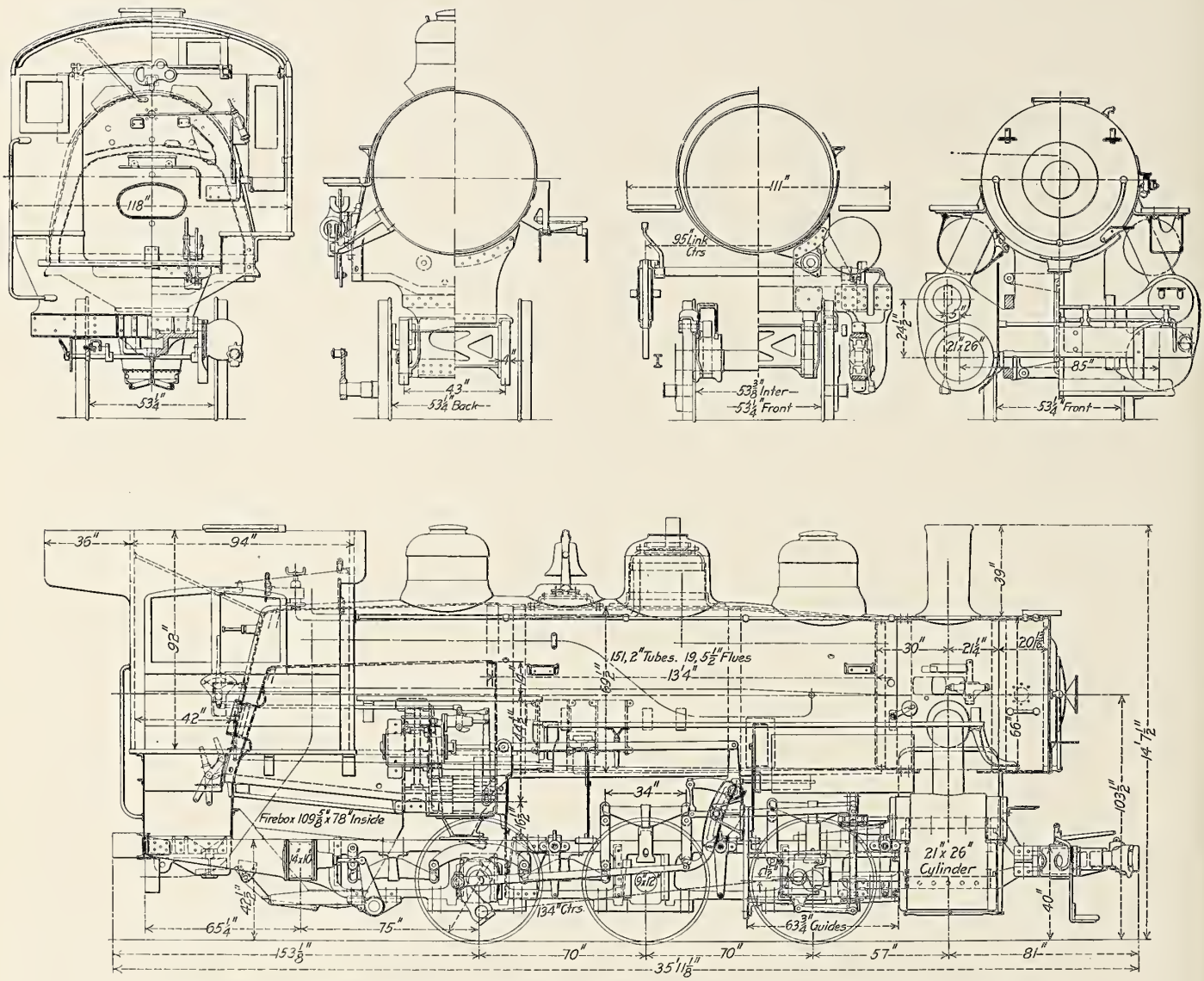

Fig. 102—Six-Wheel (0-6-0) Switching Locomotive. Built for the Illinois Central by American Locomotive Company

GENERAL DATA.

Gage	4 ft. 8½ in.
Service	Switching
Fuel	Soft Coal
Tractive Effort	32,450 lbs.
Weight in Working Order	166,000 lbs.
Weight on Drivers	166,000 lbs.
Wheel Base, Driving	11 ft. 8 in.
Wheel Base, Total	11 ft. 8 in.

RATIOS.

Weight on Drivers ÷ Tractive Effort	5.12
Total weight ÷ Tractive Effort	5.12
Tractive Effort × Diameter Drivers ÷ Equivalent Heating Surface*	845.00
Equivalent Heating Surface* ÷ Grate Area	50.50
Weight on Drivers ÷ Equivalent Heating Surface*	84.70
Total Weight ÷ Equivalent Heating Surface*	84.70
Volume Both Cylinders	10.40 cu. ft
Equivalent Heating Surface* ÷ Volume Cylinders	188.30
Grate Area ÷ Volume Cylinders	3.74

CYLINDERS.

Kind	Simple
Diameter and Stroke	21 in. x 26 in.

VALVES.

Kind	Piston

WHEELS.

Driving, Diameter Over Tires	51 in.
Driving Journals, Main, Diameter and Length	9 in. x 12 in.

BOILER.

Style	E. W. T.
Working Pressure	170 lbs. per sq. in.
Outside Diameter of First Ring	63 in.
Firebox, Length and Width	109⅝ in. x 78 in.
Tubes, Number and Outside Diameter	151—2 in.
Flues, Number and Outside Diameter	19—5½ in.
Tubes and Flues, Length	13 ft. 4 in.
Heating Surface, Tubes and Flues	1,409 sq. ft.
Heating Surface, Firebox	150.5 sq. ft.
Heating Surface, Total	1,559.5 sq. ft.
Superheater Heating Surface	266.6 sq. ft.
Equivalent Heating Surface*	1,959.4 sq. ft.
Grate Area	38.8 sq. ft.

TENDER

Water Capacity	5,500 gal.
Coal Capacity	6½ tons

* Equivalent heating surface = total evaporative heating surface + 1.5 times the superheating surface.

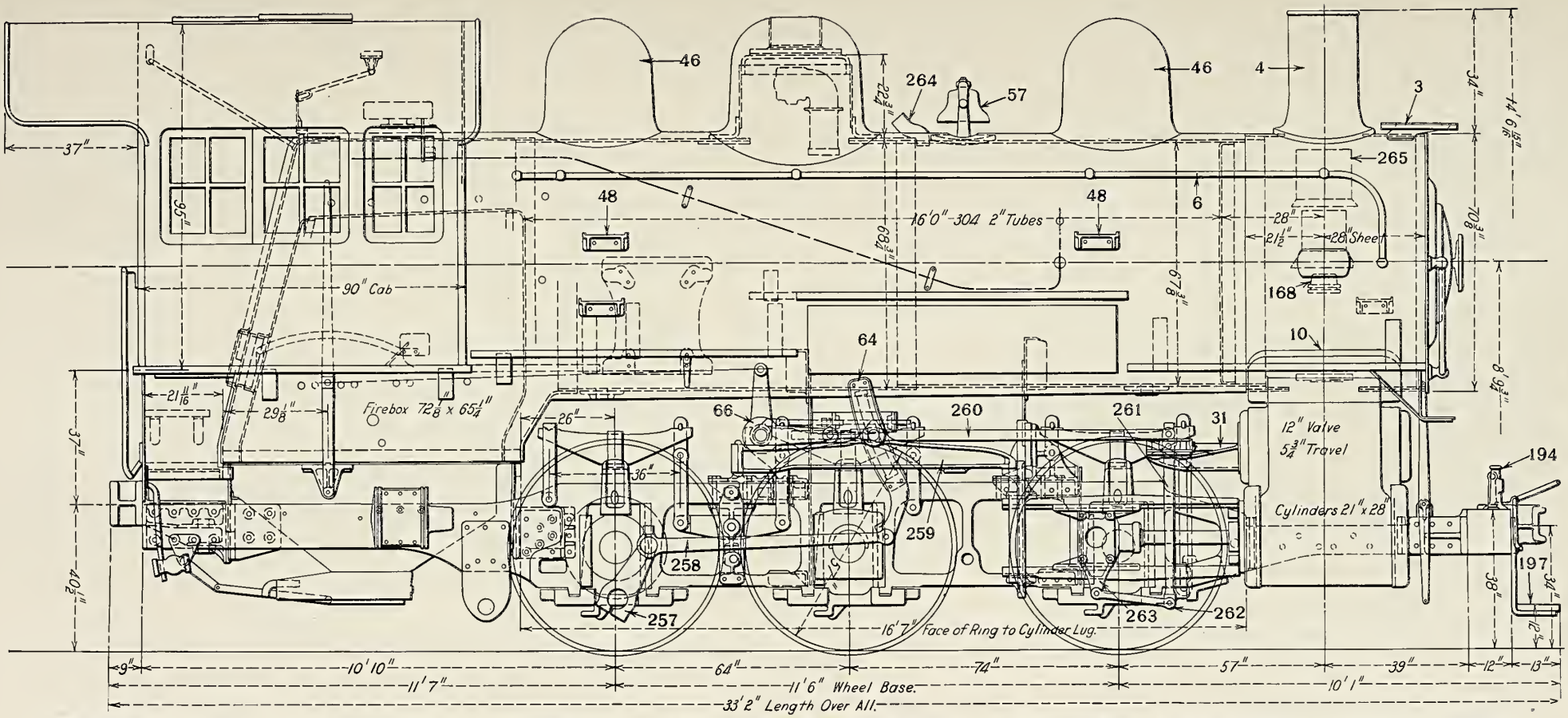

Fig. 103—Six-Wheel (0-6-0) Locomotive for Switching Service. Built for the New York Central & Hudson River by the American Locomotive Company.

GENERAL DATA.

Gage	4 ft. 8½ in.
Fuel	Soft Coal
Tractive Effort	33,140 lbs.
Weight in Working Order	166,400 lbs.
Weight on Drivers	166,400 lbs.
Weight of Engine and Tender in Working Order	270,700 lbs.
Wheel Base, Total	11 ft.
Wheel Base, Engine and Tender	42 ft. 6 in.

RATIOS.

Weight on Drivers ÷ Tractive Effort	5.02
Total Weight ÷ Tractive Effort	5.02
Tractive Effort × Diameter Drivers ÷ Heating Surface	705.00
Total Heating Surface ÷ Grate Area	82.10
Firebox Heating Surface ÷ Total Heating Surface, per cent.	5.38
Weight on Drivers ÷ Total Heating Surface	62.20
Volume Both Cylinders, cu. ft.	11.20
Total Heating Surface ÷ Volume Cylinders	238.50
Grate Area ÷ Volume Cylinders	2.80

CYLINDERS.

Kind	Simple
Diameter and Stroke	21 in. x 28 in.

VALVES.

Kind	Piston
Diameter	12 in.
Greatest Travel	5¾ in.

WHEELS.

Driving, Diameter Over Tires	57 in.

BOILER.

Style	Straight Top
Working Pressure	180 lbs.
Outside Diameter of First Ring	67⅜ in.
Firebox, Length and Width	72⅛ in. x 65¼ in.
Heating Surface, Tubes	2,535 sq. ft.
Heating Surface, Firebox and Arch Tubes	144 sq. ft.
Heating Surface, Total	2,679 sq. ft.
Grate Area	32.6 sq. ft.

TENDER.

Water Capacity	5,100 gals.
Coal Capacity	7½ tons

Numbers Refer to Names of Parts on Pages 191-192.

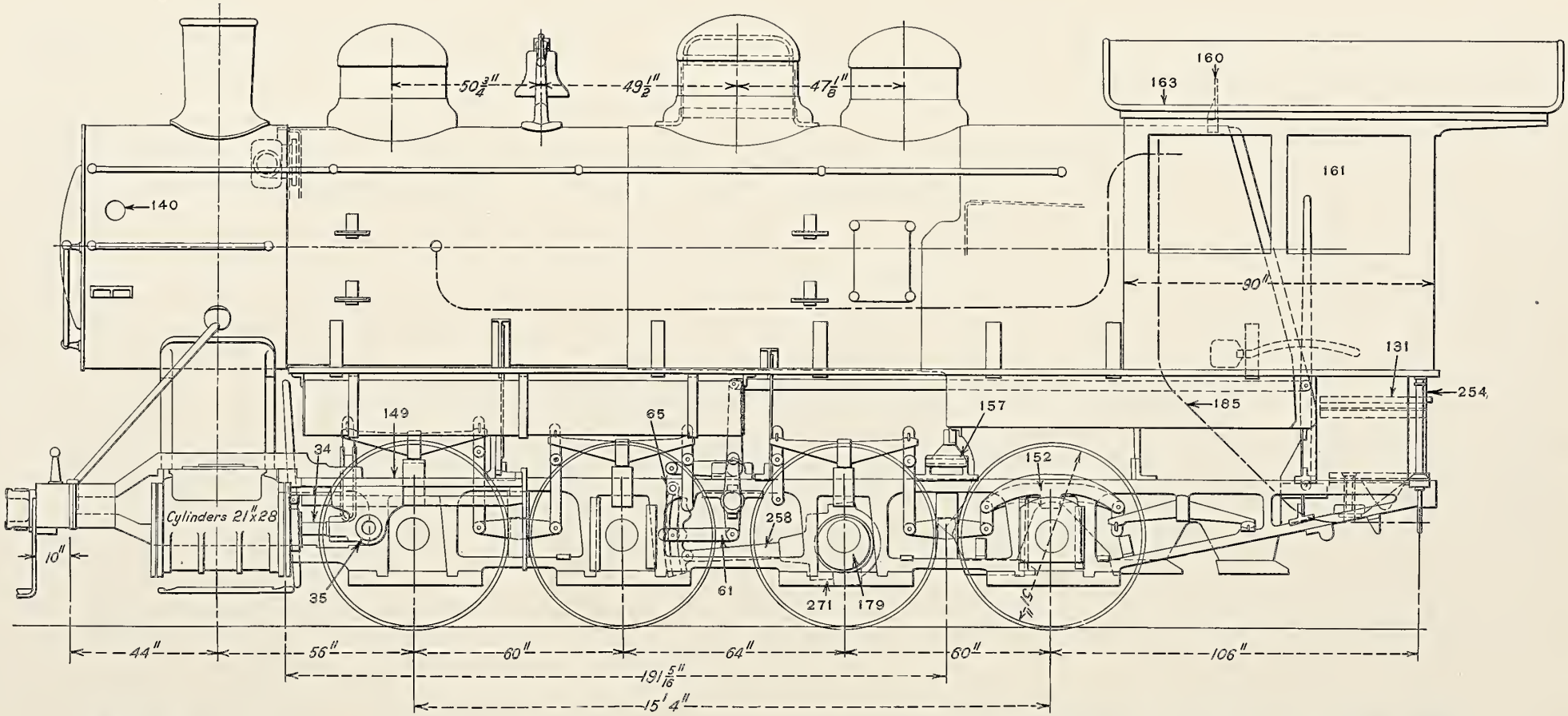

Fig. 104—Eight-Wheel (0-8-0) Locomotive for Switching Service. Built for the Ashland Coal & Iron Railway by the Baldwin Locomotive Works.

GENERAL DATA.

Gage	4 ft. 8½ in.
Fuel	Soft Coal
Tractive Effort	41,160 lbs.
Weight in Working Order	165,000 lbs.
Weight of Engine and Tender in Working Order	265,000 lbs.
Wheel Base, Total	15 ft. 4 in.
Wheel Base, Engine and Tender	45 ft. 7½ in.

RATIOS.

Weight on Drivers ÷ Tractive Effort	4.00
Tractive Effort × Diameter Drivers ÷ Heating Surface	861.00
Total Heating Surface ÷ Grate Area	55.40
Firebox Heating Surface ÷ Total Heating Surface, per cent.	5.70
Weight on Drivers ÷ Total Heating Surface	67.90
Volume Both Cylinders, cu. ft.	11.20
Total Heating Surface ÷ Volume Cylinders	216.90
Grate Area ÷ Volume Cylinders	3.92

CYLINDERS.

Kind	Simple
Diameter and Stroke	21 in. x 28 in.

VALVES.

Kind	Balanced Slide

WHEELS.

Driving, Diameter Over Tires	51 in.
Driving, Thickness of Tires	3½ in.
Driving Journals, Main, Diameter and Length	9½ in. x 12 in.
Driving Journals, Others, Diameter and Length	9 in. x 12 in.

BOILER.

Style	Straight Top
Working Pressure	200 lbs.
Outside Diameter of First Ring	68 in.
Firebox, Length and Width	96⅛ in. x 66 in.
Heating Surface, Tubes	2,300 sq. ft.
Heating Surface, Firebox	139 sq. ft.
Heating Surface, Total	2,439 sq. ft.
Grate Area	44 sq. ft.

TENDER.

Wheels, Diameter	33 in.
Journals, Diameter and Length	5 in. x 9 in.
Water Capacity	5,000 gals.
Coal Capacity	11 tons

Numbers Refer to Names of Parts on Pages 191-192.

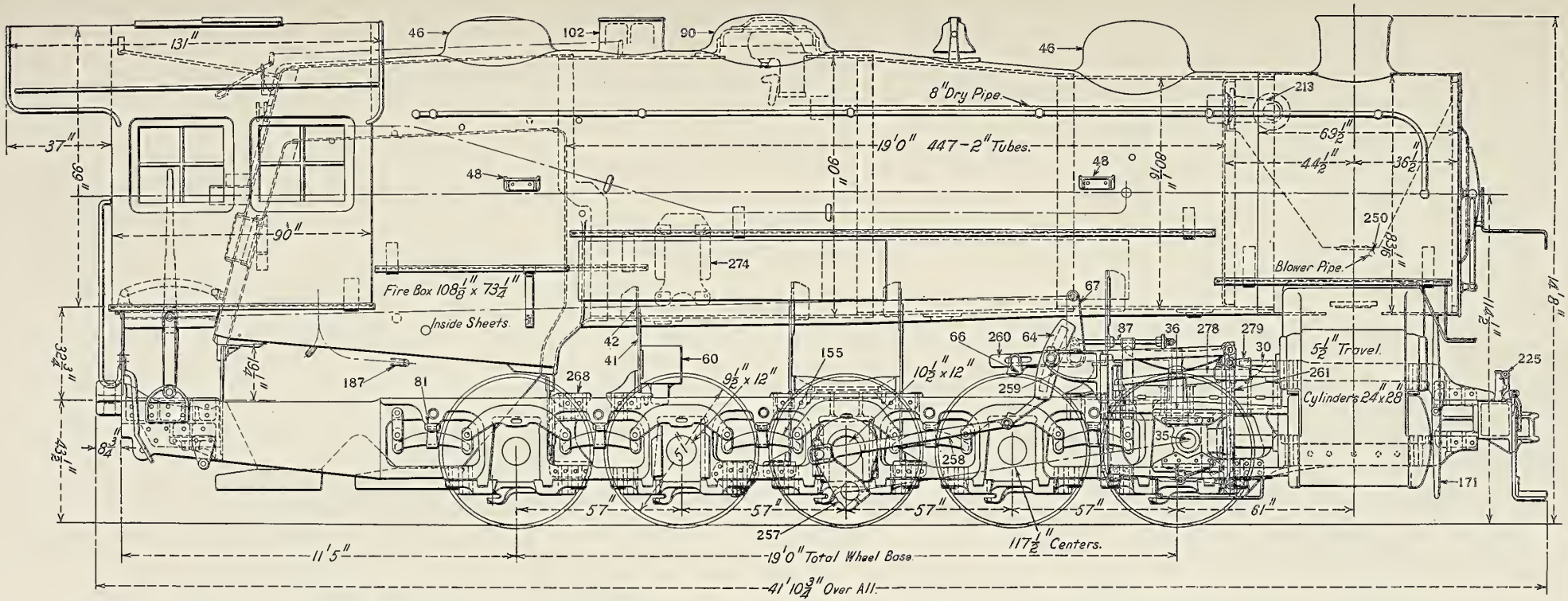

Fig. 105—Ten-Wheel (0-10-0) Locomotive for Switching Service. Built for the New York Central Lines by the American Locomotive Company.

GENERAL DATA.

Gage	4 ft. 8½ in.
Fuel	Soft Coal
Tractive Effort	56,500 lbs.
Weight in Working Order	274,000 lbs.
Weight on Drivers	274,000 lbs.
Weight of Engine and Tender in Working Order	425,700 lbs.
Wheel Base, Driving	19 ft.
Wheel Base, Total	19 ft.
Wheel Base, Engine and Tender	54 ft. 7½ in.

RATIOS.

Weight on Drivers ÷ Tractive Effort	4.85
Total Weight ÷ Tractive Effort	4.85
Tractive Effort × Diameter Drivers ÷ Heating Surface	627.00
Total Heating Surface ÷ Grate Area	83.80
Firebox Heating Surface ÷ Total Heating Surface, per cent.	4.04
Weight on Drivers ÷ Total Heating Surface	48.50
Total Weight ÷ Total Heating Surface	48.50
Volume Both Cylinders, cu. ft.	14.62
Total Heating Surface ÷ Volume Cylinders	314.50
Grate Area ÷ Volume Cylinders	3.78

CYLINDERS.

Kind	Simple
Diameter and Stroke	24 in. x 28 in.

VALVES.

Kind	Piston
Diameter	12 in.
Greatest Travel	5½ in.

WHEELS.

Driving, Diameter Over Tires	51 in.
Driving Journals, Main, Diameter and Length	10½ in. x 12 in.
Driving Journals, Others, Diameter and Length	9½ in. x 12 in.

BOILER.

Style	Conical
Working Pressure	210 lbs.
Outside Diameter of First Ring	80 1/16 in.
Firebox, Length and Width	108⅛ in. x 73¼ in.
Tubes, Number and Outside Diameter	447—2 in.
Tubes, Length	19 ft.
Heating Surface, Tubes	4,416 sq. ft.
Heating Surface, Firebox	186 sq. ft.
Heating Surface, Total	4,602 sq. ft.
Grate Area	55 sq. ft.
Smoke Stack, Height Above Rail	14 ft. 8 in.
Center of Boiler Above Rail	9 ft. 6½ in.

TENDER.

Tank	Water Bottom
Frame	Channels
Weight	151,700 lbs.
Water Capacity	8,000 gals.
Coal Capacity	12 tons

Numbers Refer to Names of Parts on Pages 191-192.

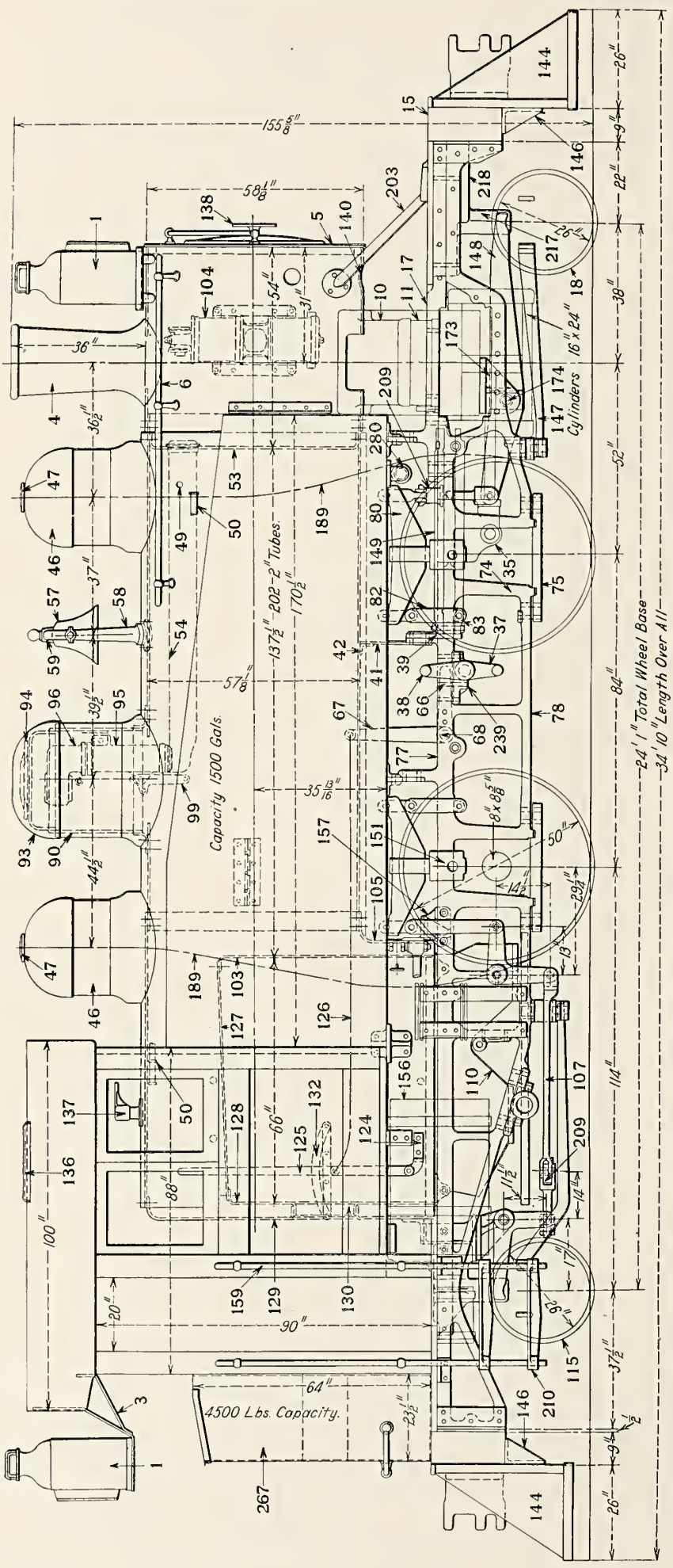

Fig. 106—Four-Coupled Double Ender (2-4-2) Locomotive for Switching Service. Built for the Ray Consolidated Copper Co. by the H. K. Porter Company.

GENERAL DATA.

Gage	4 ft. 8½ in.
Fuel	Soft Coal
Tractive Effort	18,800 lbs.
Weight in Working Order	124,200 lbs.
Weight on Drivers	99,300 lbs.
Weight on Leading Truck	12,500 lbs.
Weight on Trailing Truck	12,400 lbs.
Wheel Base, Driving	7 ft.
Wheel Base, Total	24 ft.

RATIOS.

Weight on Drivers ÷ Tractive Effort	5.27
Total Weight ÷ Tractive Effort	6.62
Tractive Effort × Diameter Drivers ÷ Heating Surface	722.00
Total Heating Surface ÷ Grate Area	66.80
Firebox Heating Surface ÷ Total Heating Surface, per cent.	7.26
Weight on Drivers ÷ Total Heating Surface	76.25
Total Weight ÷ Total Heating Surface	95.50
Volume Both Cylinders, cu. ft.	6.87
Total Heating Surface ÷ Volume Cylinders	189.70
Grate Area ÷ Volume Cylinders	2.84

CYLINDERS.

Kind	Simple
Diameter and Stroke	16 in. x 24 in.

VALVES.

Kind	Balanced Slide
Greatest Travel	4.9 in.
Outside Lap	¾ in.
Inside Lap	None
Lead in Full Gear	1/16 in.

WHEELS.

Driving, Diameter Over Tires	50 in.
Driving, Thickness of Tires	3 in.
Driving Journals, Diameter and Length	8 in. x 8⅝ in.
Engine Truck Wheels, Diameter	26 in.
Engine Truck, Journals	4¼ in. x 6 in.
Trailing Truck Wheels, Diameter	26 in.
Trailing Truck, Journals	4¼ in. x 6 in.

BOILER.

Style	Straight Top
Working Pressure	180 lbs.
Outside Diameter of First Ring	57 in.
Firebox, Length and Width	66 in. x 48 in. top, 42½ in. bottom
Tubes, Number and Outside Diameter	202—2 in.
Tubes, Length	11 ft. 6 in.
Heating Surface, Tubes	1,207.4 sq. ft.
Heating Surface, Firebox	94.6 sq. ft.
Heating Surface, Total	1,302.0 sq. ft.
Grate Area	19.5 sq. ft.
Water Capacity, Tank	1,500 gals.
Coal Capacity, Bunkers	2¼ tons

Numbers Refer to Names of Parts on Pages 191-192.

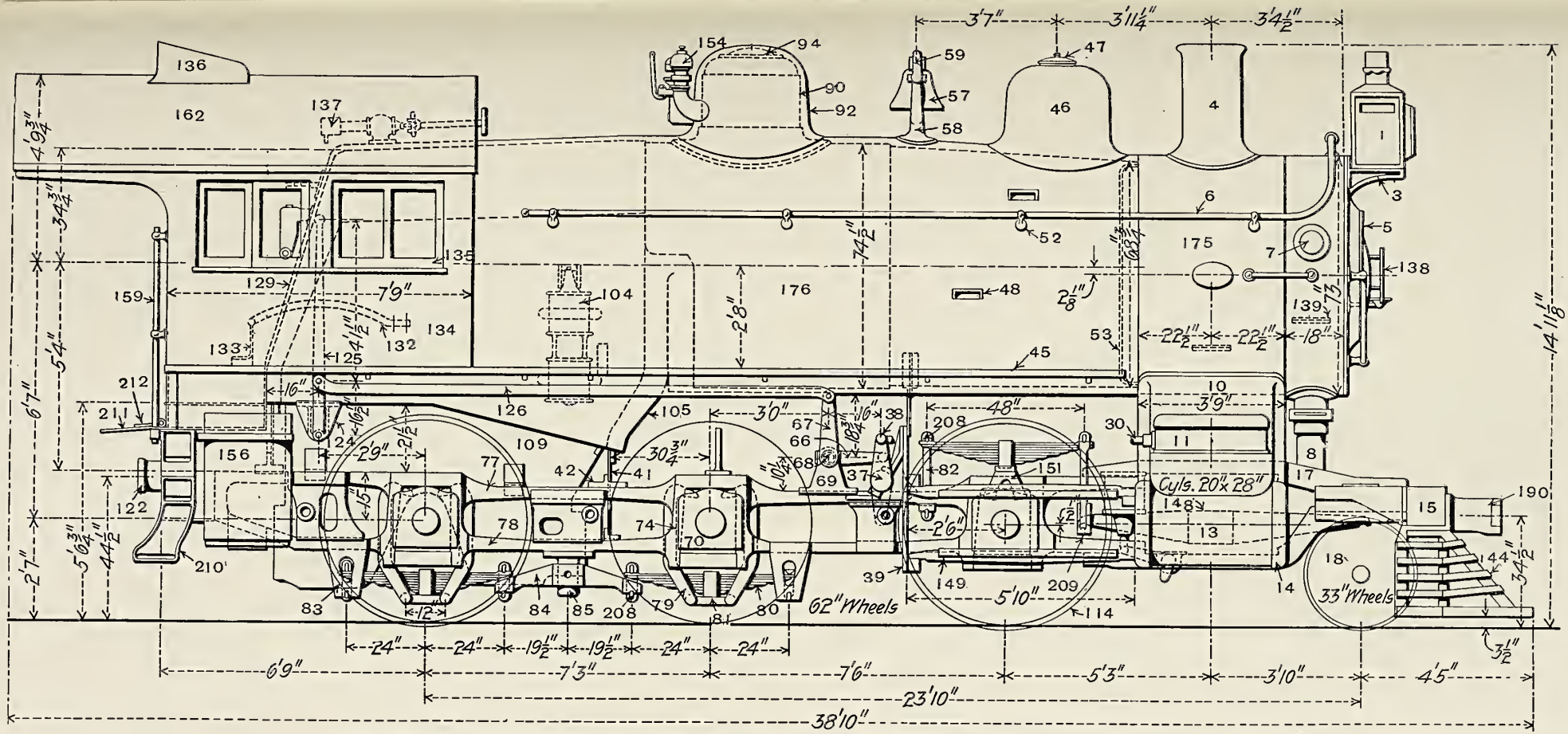

Fig. 107—Mogul (2-6-0) Locomotive for Freight Service. Built by the Pennsylvania Railroad.

GENERAL DATA.

Gage	4 ft. 8½ in.
Class	F3c
Fuel	Soft Coal
Tractive Effort	29,627 lbs.
Weight in Working Order	165,900 lbs.
Weight on Drivers	142,900 lbs.
Weight on Leading Truck	23,000 lbs.
Weight of Engine and Tender in Working Order	308,900 lbs.
Wheel Base, Driving	14 ft. 9 in.
Wheel Base, Total	23 ft. 10 in.
Wheel Base, Engine and Tender	55 ft. 10¼ in.

RATIOS.

Weight on Drivers ÷ Tractive Effort	4.83
Total Weight ÷ Tractive Effort	5.59
Tractive Effort × Diameter Drivers ÷ Heating Surface	743.00
Total Heating Surface ÷ Grate Area	52.45
Firebox Heating Surface ÷ Total Heating Surface, per cent.	6.25
Weight on Drivers ÷ Total Heating Surface	52.80
Total Weight ÷ Total Heating Surface	67.10
Volume Both Cylinders, cu. ft.	10.20
Total Heating Surface ÷ Volume Cylinders	242.00
Grate Area ÷ Volume Cylinders	4.11

CYLINDERS.

Kind	Simple
Diameter and Stroke	20 in. x 28 in.

VALVES.

Kind	D Slide
Greatest Travel	6 in.

WHEELS.

Driving, Diameter Over Tires	62 in.
Driving Journals, Main, Diameter and Length	9¼ in. x 12 in.
Driving Journals, Others, Diameter and Length	8½ in. x 12 in.
Engine Truck Wheels, Diameter	33 in.
Engine Truck, Journals	5½ in. x 10 in.

BOILER.

Style	Ext. Wagon Top, Belpaire Firebox
Working Pressure	205 lbs.
Outside Diameter of First Ring	67¼ in.
Firebox, Length and Width	102.7 in. x 66 in.
Tubes, Number and Outside Diameter	364—2 in.
Tubes, Length	12 ft. 1¾ in.
Heating Surface, Tubes	2,315 sq. ft.
Heating Surface, Firebox	154 sq. ft.
Heating Surface, Total	2,469 sq. ft.
Grate Area	47 sq. ft.

Numbers Refer to Names of Parts on Pages 191-192.

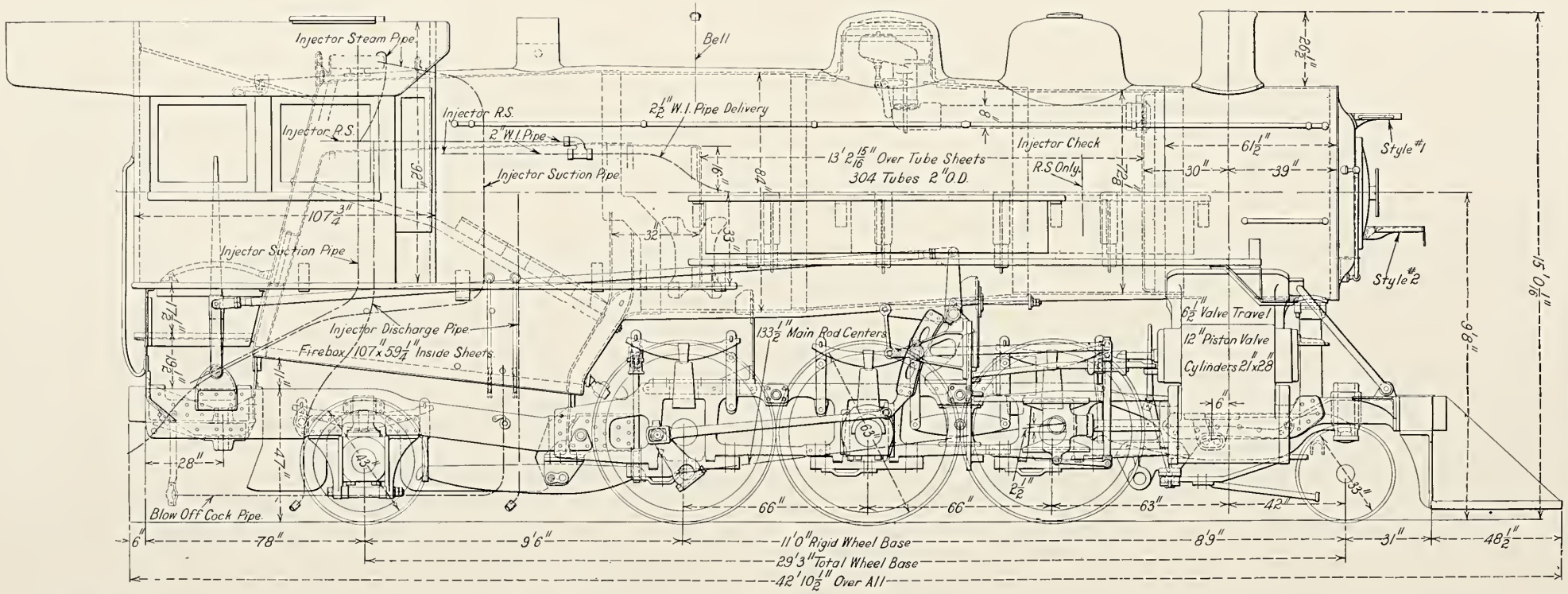

Fig 108—Prairie Type (2-6-2) Locomotive for Freight Service. Built for the Chicago, Milwaukee & Puget Sound by the American Locomotive Company.

GENERAL DATA.

Gage	4 ft. 8½ in.
Fuel	Soft Coal
Tractive Effort	33,300 lbs.
Weight in Working Order	208,000 lbs.
Weight on Drivers	151,500 lbs.
Weight on Leading Truck	23,000 lbs.
Weight on Trailing Truck	33,500 lbs.
Weight of Engine and Tender in Working Order	363,300 lbs.
Wheel Base, Driving	11 ft.
Wheel Base, Total	29 ft. 3 in.
Wheel Base, Engine and Tender	59 ft. 9¼ in.

RATIOS.

Weight on Drivers ÷ Tractive Effort	4.54
Total Weight ÷ Tractive Effort	6.25
Tractive Effort × Diameter Drivers ÷ Heating Surface	886.00
Total Heating Surface ÷ Grate Area	53.90
Firebox Heating Surface ÷ Total Heating Surface, per cent.	12.00
Weight on Drivers ÷ Total Heating Surface	64.50
Total Weight ÷ Total Heating Surface	90.70
Volume Both Cylinders, cu. ft.	11.20
Total Heating Surface ÷ Volume Cylinders	212.00
Grate Area ÷ Volume Cylinders	3.82

CYLINDERS.

Kind	Simple
Diameter and Stroke	21 in. x 28 in.

VALVES.

Kind	Piston
Diameter	12 in.
Greatest Travel	6½ in.

WHEELS.

Driving, Diameter Over Tires	63 in.
Driving Journals, Diameter and Length	9½ in. x 12 in.
Engine Truck Wheels, Diameter	33 in.
Engine Truck, Journals	6½ in. x 12 in.
Trailing Truck Wheels, Diameter	43 in.
Trailing Truck, Journals	8½ in. x 12 in.

BOILER.

Style	Conical
Working Pressure	200 lbs.
Outside Diameter of First Ring	72½ in.
Firebox, Length and Width	107 in. x 59¼ in.
Tubes, Number and Outside Diameter	304—2 in.
Tubes, Length	13 ft. 2 15/16 in.
Heating Surface, Tubes	2,082 sq. ft.
Heating Surface, Firebox and Arch Tubes	285 sq. ft.
Heating Surface, Total	2,367 sq. ft.
Grate Area	44 sq. ft.

TENDER.

Tank	Water Bottom
Frame	Channels
Weight	155,300 lbs.
Water Capacity	8,000 gals.
Coal Capacity	14 tons

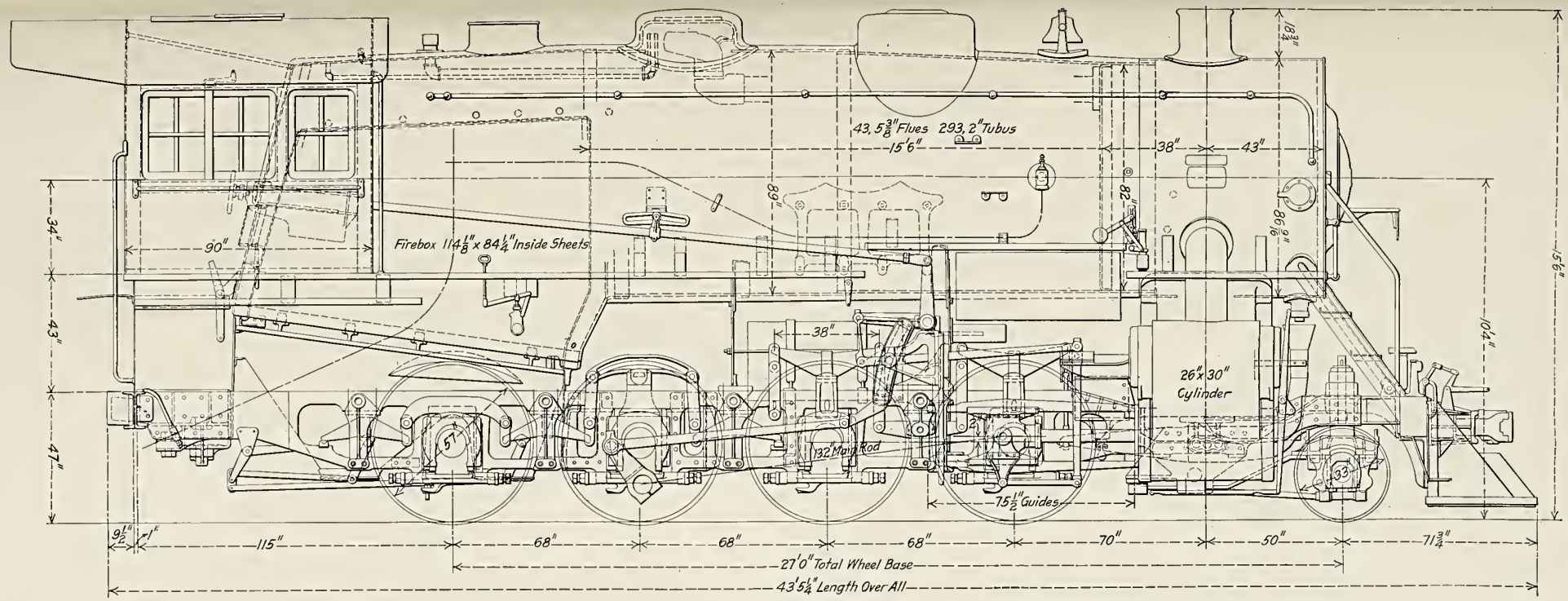

Fig. 109—Consolidation (2-8-0) Locomotive for Freight Service. Built for the Wheeling & Lake Erie by the American Locomotive Company.

GENERAL DATA.

Gage	4 ft. 8½ ins
Service	Freight
Fuel	Soft Coal
Tractive Effort	55,900 lbs.
Weight in Working Order	266,500 lbs.
Weight on Drivers	236,000 lbs.
Weight on Leading Truck	30,500 lbs.
Weight of Engine and Tender in Working Order	443,800 lbs.
Wheel Base, Driving	17 ft.
Wheel Base, Total	27 ft. 0 in.
Wheel Base, Engine and Tender	62 ft. 3 in.

RATIOS.

Weight on Drivers ÷ Tractive Effort	4.23
Total Weight ÷ Tractive Effort	4.77
Tractive Effort × Diameter Drivers ÷ Equivalent Heating Surface*	680.00
Equivalent Heating Surface* ÷ Grate Area	70.20
Firebox Heating Surface ÷ Equivalent Heating Surface,* per cent	4.80
Weight on Drivers ÷ Equivalent Heating Surface*	50.30
Total Weight ÷ Equivalent Heating Surface*	57.00
Volume Both Cylinders	18.50 cu. ft.
Equivalent Heating Surface* ÷ Volume Cylinders	253.00
Grate Area ÷ Volume Cylinders	3.60

CYLINDERS.

Kind	Simple
Diameter and Stroke	26 in. x 30 in.

VALVES.

Kind	Piston
Diameter	14 in.
Greatest travel	6½ in.
Outside lap	1 1/16 in.
Inside Clearance	0 in.
Lead in Full Gear	⅛ in.

WHEELS.

Driving, Diameter Over Tires	57 in.
Driving, Thickness of Tires	3½ in.
Driving Journals, Main, Diameter and Length	11 in. x 22 in.
Driving Journals, Others, Diameter and Length	10½ in. x 13 in.
Engine Truck Wheels, Diameter	33 in.
Engine Truck, Journals	6½ in. x 12 in.

BOILER.

Style	E. W. T.
Working Pressure	185 lb. per sq. in.
Outside Diameter of First Ring	83 9/16 in.
Firebox, Length and Width	114 in. x 84¼ in.
Firebox Plates, Thickness	⅜ in. and ½ in.
Firebox, Water Space	5 in.
Tubes, Number and Outside Diameter	293—2 in.
Flues, Number and Outside Diameter	43—5⅜ in.
Tubes and Flues, Length	15 ft. 6 in.
Heating Surface, Tubes	3,293.4 sq. ft.
Heating Surface, Firebox	223.7 sq. ft.
Heating Surface, Total	3,517.1 sq. ft.
Superheater Heating Surface	774 sq. ft.
Equivalent Heating Surface*	4,678.1 sq. ft.
Grate Area	66.75 sq. ft.

TENDER.

Frame	13 in. and 10 in. Channels
Weight	177,300 lbs.
Wheels, Diameter	33 in.
Journals, Diameter and Length	6 in. x 11 in.
Water Capacity	9,000 gal.
Coal Capacity	15 tons

*Equivalent Heating Surface = total evaporative heating surface + 1.5 times the superheating surface.

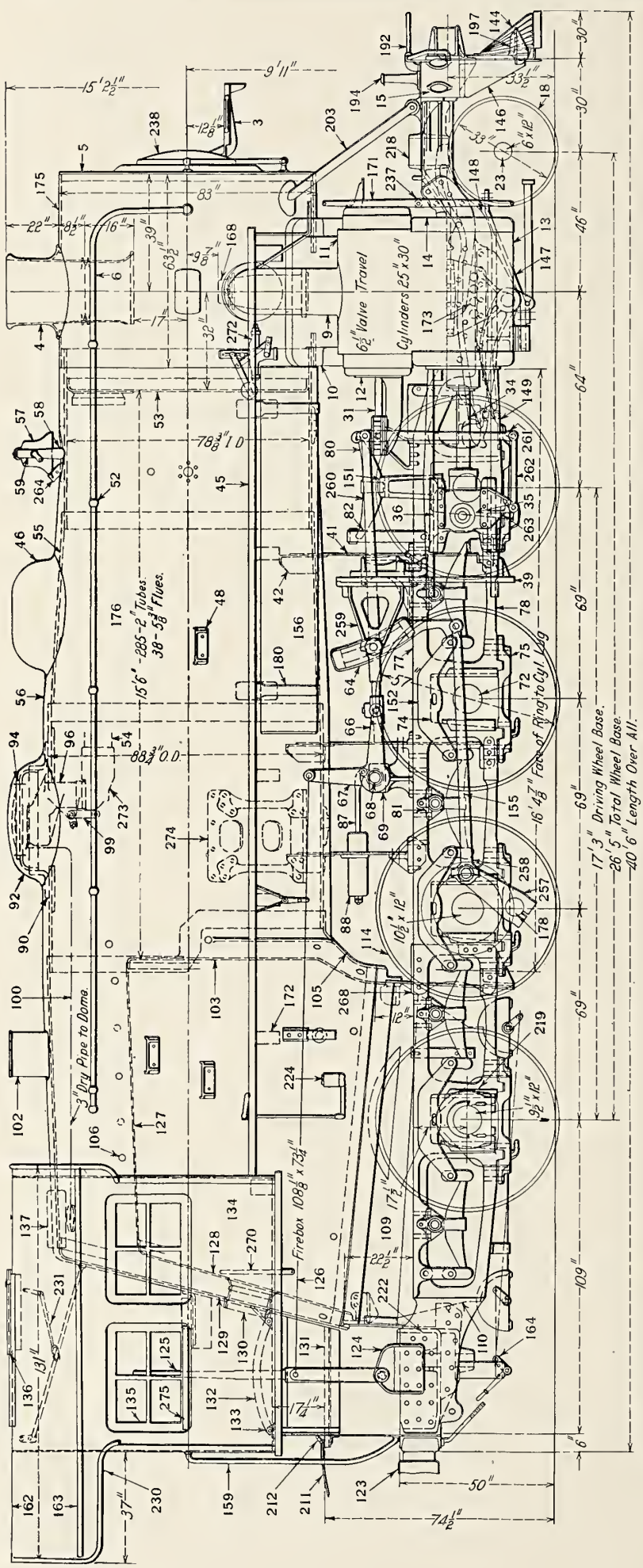

Fig. 110—Consolidation (2-8-0) Locomotive for Freight Service. Built for the Toledo & Ohio Central by the American Locomotive Company.

GENERAL DATA.

Gage	4 ft. 8½ in.
Fuel	Soft Coal
Tractive Effort	50,200 lbs.
Weight in Working Order	253,000 lbs.
Weight on Drivers	223,500 lbs.
Weight on Leading Truck	29,500 lbs.
Weight of Engine and Tender in Working Order	400,300 lbs.
Wheel Base, Driving	17 ft. 3 in.
Wheel Base, Total	26 ft. 5 in.
Wheel Base, Engine and Tender	58 ft. 2¾ in.

RATIOS.

Weight on Drivers ÷ Tractive Effort	4.45
Total Weight ÷ Tractive Effort	5.04
Tractive Effort × Dimeter Drivers ÷ Equivalent Surface,* per cent	657.00
Equivalent Heating Surface* ÷ Grate Area	79.40
Firebox Heating Surface ÷ Equivalent Heating Surface*	5.30
Weight on Drivers ÷ Equivalent Heating Surface*	51.00
Total Weight ÷ Equivalent Heating Surface*	58.00
Volume Both Cylinders, cu. ft.	17.04
Equivalent Heating Surface* ÷ Volume Cylinders	254.90
Grate Area ÷ Volume Cylinders	3.22

CYLINDERS.

Kind	Simple
Diameter and Stroke	25 in. x 30 in.

VALVES.

Kind	Piston
Greatest Travel	6½ in.

WHEELS.

Driving, Diameter Over Tires	57 in.
Driving Journals, Main, Diameter and Length	10½ in. x 12 in.
Driving Journals, Others, Diameter and Length	9½ in. x 12 in.
Engine Truck Wheels, Diameter	33 in.
Engine Truck, Journals	6 in. x 12 in.

BOILER.

Style	Conical
Working Pressure	180 lbs.
Outside Diameter of First Ring	80 in.
Firebox, Length and Width	108⅛ in. x 73¼ in.
Tubes, Number and Outside Diameter	285—2 in.
Flues, Number and Outside Diameter	38—5⅜ in.
Tubes, Length	15 ft. 6 in.
Heating Surface, Tubes and Flues	3,120 sq. ft.
Heating Surface, Firebox and Arch Tubes	231 sq. ft.
Heating Surface, Total	3,351 sq. ft.
Equivalent Heating Surface*	4,368 sq. ft.
Superheater Heating Surface	678 sq. ft.
Grate Area	55 sq. ft.

*Equivalent Heating Surface Equals 3,351 + (1.5 × 678) = 4,368 sq. ft.

Numbers Refer to Names of Parts on Pages 191-192.

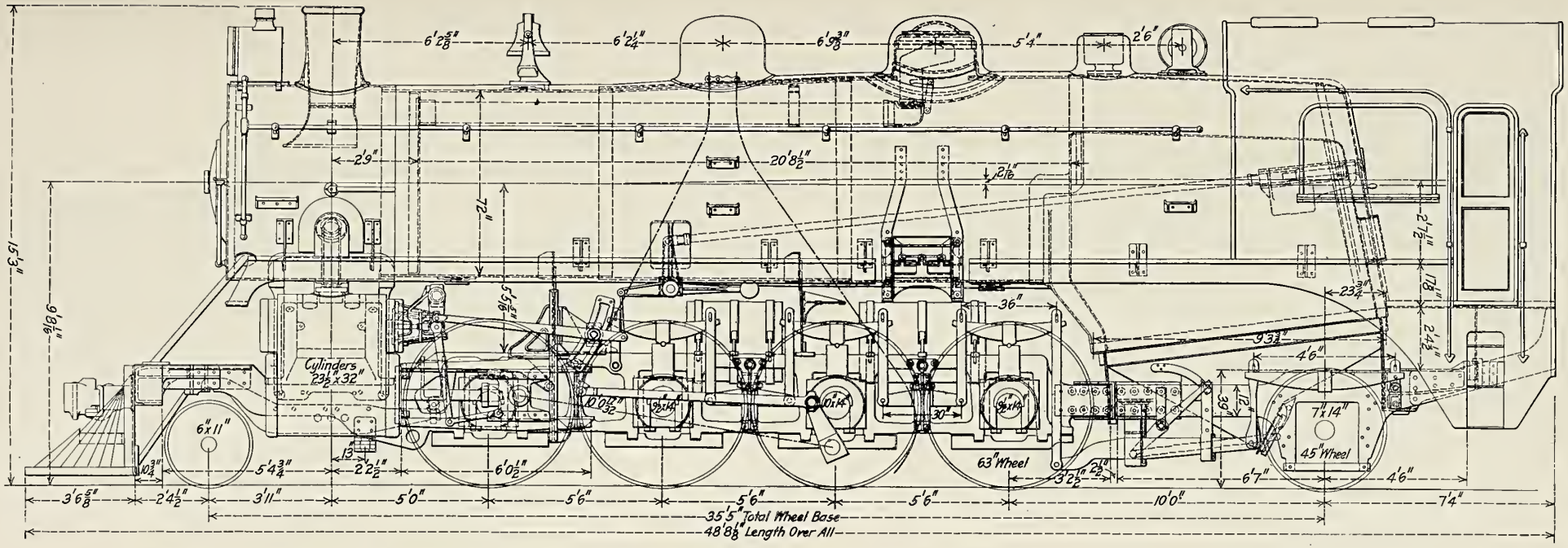

Fig. 111—Mikado (2-8-2) Locomotive for Freight and Passenger Service. Built for the Canadian Pacific by the Montreal Locomotive Works.

GENERAL DATA.

Gage	4 ft. 8½ in.
Service	Freight and Passenger
Fuel	Soft Coal
Tractive Effort	42,000 lbs.
Weight in Working Order	258,000 lbs.
Weight on Drivers	198,000 lbs.
Weight on Leading Truck	25,000 lbs.
Weight on Trailing Truck	35,000 lbs.
Weight of Engine and Tender in Working Order	428,000 lbs.
Wheel Base, Driving	16 ft. 6 in.
Wheel Base, Total	35 ft. 5 in.
Wheel Base, Engine and Tender	66 ft. 5 in.

RATIOS.

Weight on Drivers ÷ Tractive Effort	4.70
Total Weight ÷ Tractive Effort	6.14
Tractive Effort × Diameter Drivers ÷ Equivalent Heating Surface*	560.00
Equivalent Heating Surface* ÷ Grate Area	94.70
Firebox Heating Surface ÷ Equivalent Heating Surface,* per cent	3.97
Weight on Drivers ÷ Equivalent Heating Surface*	41.80
Total Weight ÷ Equivalent Heating Surface*	54.50
Equivalent Heating Surface* ÷ Volume Cylinders	294.00
Grate Area ÷ Volume Cylinders	3.11

CYLINDERS.

Kind	Simple
Diameter and Stroke	23½ in. x 32 in.

VALVES.

Kind	Piston
Diameter	12 in.
Greatest Travel	6 in.
Outside Lap	1 in.
Lead in Full Gear	¼ in.

WHEELS.

Driving, Diameter Over Tires	63 in.
Driving, Thickness of Tires	3½ in.
Driving Journals, Main, Diameter and Length	10 in. x 14 in.
Driving Journals, Others, Diameter and Length	9½ in. x 14 in.
Engine Truck Wheels, Diameter	31 in.
Engine Truck, Journals	6 in. x 11 in.
Trailing Truck Wheels, Diameter	45 in.
Trailing Truck, Journals	7 in. x 14 in.

BOILER.

Style	E. W. T.
Working Pressure	180 lbs. per sq. in.
Outside Diameter of First Ring	72 in.
Firebox, Length and Width	103¼ in. x 69⅞ in.
Firebox Plates, Thickness	½ in., 5/16 in. and ⅜ in.
Firebox, Water Space	5 in., 4½ in. and 3½ in.
Tubes, Number and Outside Diameter	210—2¼ in.
Flues, Number and Outside Diameter	30—5¼ in.
Tubes and Flues, Length	20 ft. 8½ in.
Heating Surface, Tubes and Flues	3,410 sq. ft.
Heating Surface, Firebox	188 sq. ft.
Heating Surface, Total	3,598 sq. ft.
Superheater Heating Surface	760 sq. ft.
Equivalent Heating Surface*	4,738 sq. ft.
Grate Area	50 sq. ft.
Center of Boiler Above Rail	116 in.

TENDER.

Weight	170,000 lbs.
Wheels, Diameter	36¼ in.
Journals, Diameter and Length	6 in. x 11 in.
Water Capacity	8,500 gal.
Coal Capacity	16 tons

* Equivalent Heating Surface = Total Evaporative Heating Surface + 1.5 times the Superheating Surface.

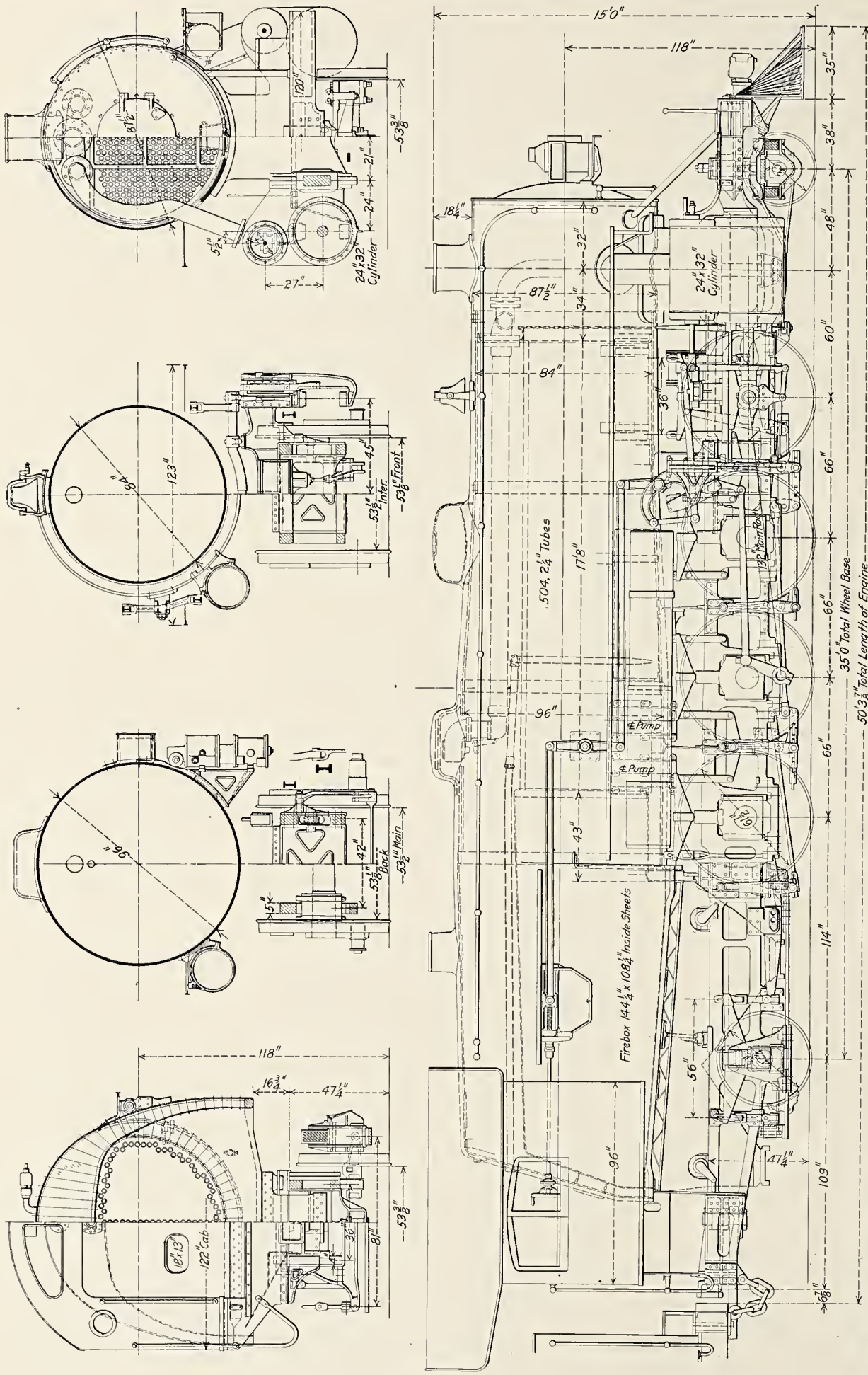

Fig. 112—Mikado (2-8-2) Locomotive for Freight Service. Built by the Philadelphia & Reading. Cylinders, 24 in. x 32 in. Steam Pressure, 225 lbs. Diameter of Drivers, 61½ in. Tractive Effort, 57,319 lbs. Heating Surface—Tubes, 5,210 sq. ft.; Firebox, 298 sq. ft.; Total, 5,508 sq. ft. Grate Area, 108 sq. ft. Wheel Base—Driving, 16 ft. 6 in.; Total, 35 ft. Weight on Drivers, 249,000 lbs. Total Weight of Engine, 331,000 lbs. Fuel, Anthracite Coal.

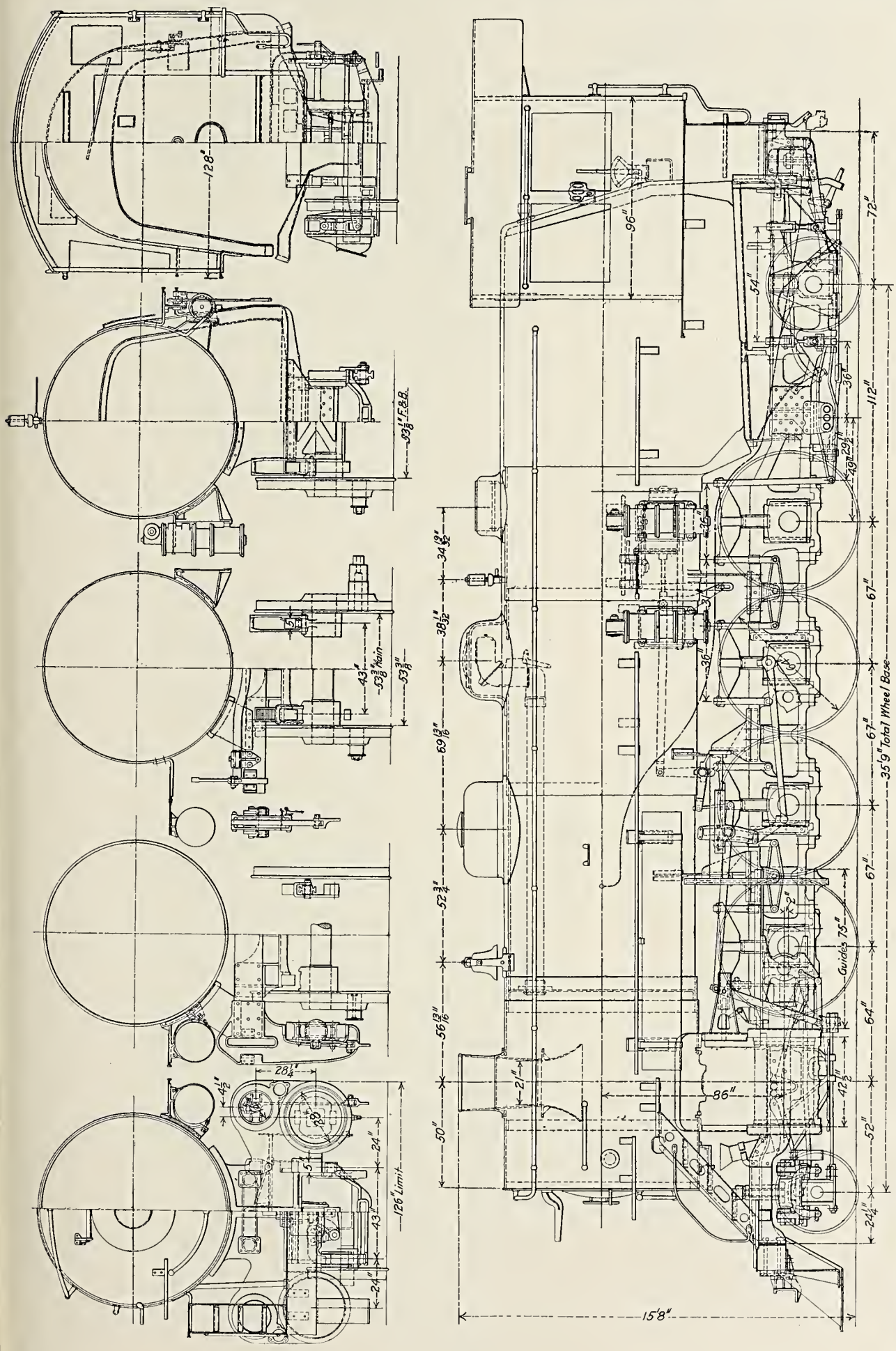

Fig. 113—Mikado (2-8-2) Locomotive for Freight Service. Built for the Chicago, Burlington & Quincy by the Baldwin Locomotive Works. Cylinders, 28 in. x 32 in. Steam Pressure, 180 lbs.. Diameter of Drivers, 64 in. Tractive Effort, 60,000 lbs. Heating Surface—Tubes, 4,373 sq. ft.; Firebox, 254 sq. ft.; Total, 4,627 sq. ft.; Superheater Surface, 961 sq. ft. Grate Area, 78 sq. ft. Wheel Base—Driving, 16 ft. 9 in.; Total, 35 ft. 9 in. Weight on Drivers, 231,000 lbs. Total Weight of Engine, 303,400 lbs. Fuel, Soft Coal.

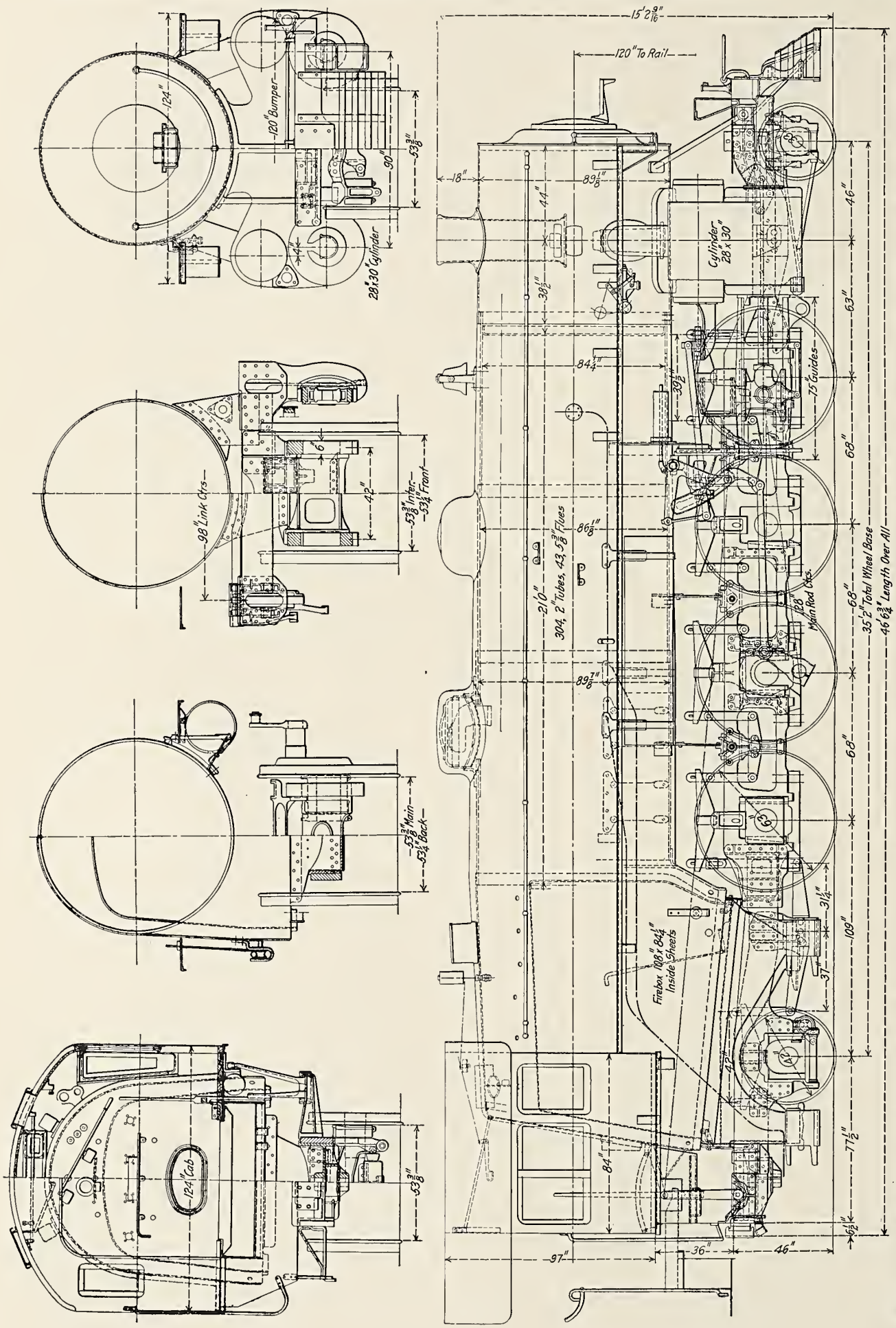

Fig. 114—Mikado (2-8-2) Locomotive for Freight Service. Built for the Lackawanna by the American Locomotive Company. Cyls., 28 in. x 30 in. Steam Pres., 180 lbs. Dia. of Drivers, 63 in. Tractive Effort, 57,000 lbs. Heat. Sur.—Tubes, 4,593 sq. ft.; Firebox, 261 sq. ft.; Total, 4,859 sq. ft. Superheater Surface, 1,065 sq. ft. Grate Area, 63.1 sq. ft. Rigid Wheel Base, 17 ft. Total Eng. Wheel Base, 53 ft. 5 in. Wt. on Drivers, 236,500 lbs. Total Wt. of Eng., 312,000 lbs. Fuel, Soft Coal.

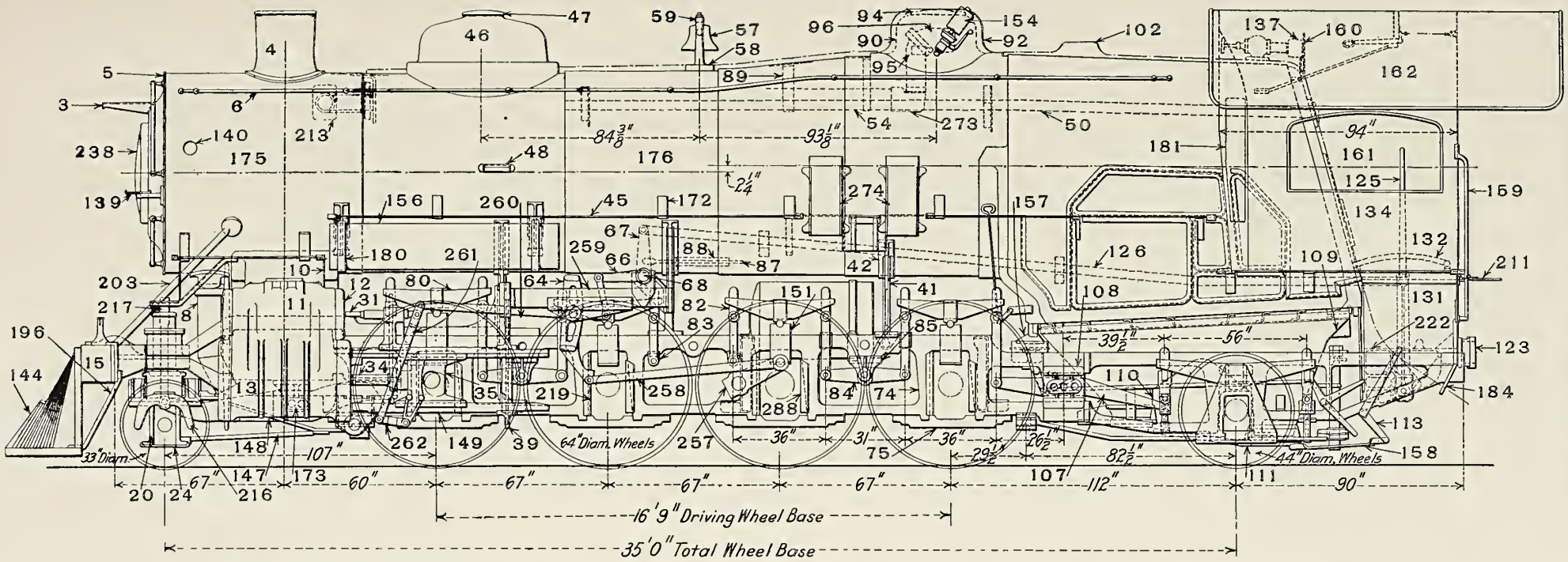

Fig. 115—Mikado (2-8-2) Locomotive for Freight Service. Built for the Baltimore & Ohio by the Baldwin Locomotive Works.

GENERAL DATA.

Gage	4 ft. 8½ in.
Fuel	Soft Coal
Tractive Effort	50,200 lbs.
Weight in Working Order	274,600 lbs.
Weight on Drivers	219,000 lbs.
Weight on Leading Truck	19,500 lbs.
Weight on Trailing Truck	36,100 lbs.
Weight of Engine and Tender in Working Order	450,000 lbs.
Wheel Base, Driving	16 ft. 9 in.
Wheel Base, Total	35 ft.
Wheel Base, Engine and Tender	71 ft. 2¾ in.

RATIOS.

Weight on Drivers ÷ Tractive Effort	4.36
Total Weight ÷ Tractive Effort	5.45
Tractive Effort × Diameter Drivers ÷ Heating Surface	640.00
Total Heating Surface ÷ Grate Area	71.70
Firebox Heating Surface ÷ Total Heating Surface, per cent.	4.55
Weight on Drivers ÷ Total Heating Surface	43.65
Total Weight ÷ Total Heating Surface	54.70
Volume Both Cylinders, cu. ft.	16.76
Total Heating Surface ÷ Volume Cylinders	299.50
Grate Area ÷ Volume Cylinders	4.18

CYLINDERS.

Kind	Simple
Diameter and Stroke	24 in. x 32 in.

VALVES.

Kind	Piston

WHEELS.

Driving, Diameter Over Tires	64 in.
Driving, Thickness of Tires	4 in.
Driving Journals, Main, Diameter and Length	11 in. x 13 in.
Driving Journals, Others, Diameter and Length	9½ in. x 13 in.
Engine Truck Wheels, Diameter	33 in.
Engine Truck, Journals	6 in. x 10 in.
Trailing Truck Wheels, Diameter	44 in.
Trailing Truck, Journals	8 in. x 14 in.

BOILER.

Style	Ext. Wagon Top
Working Pressure	205 lbs.
Outside Diameter of First Ring	78 in.
Firebox, Length and Width	120 in. x 84 in.
Tubes, Number and Outside Diameter	389—2¼ in.
Tubes, Length	21 ft.
Heating Surface, Tubes	4,789 sq. ft.
Heating Surface, Firebox	228 sq. ft.
Heating Surface, Total	5,017 sq. ft.
Grate Area	70 sq. ft.

TENDER.

Tank	Water Bottom
Wheels, Diameter	33 in.
Journals, Diameter and Length	6 in. x 11 in.
Water Capacity	9,500 gals.
Coal Capacity	16 tons

Numbers Refer to Names of Parts on Pages 191-192.

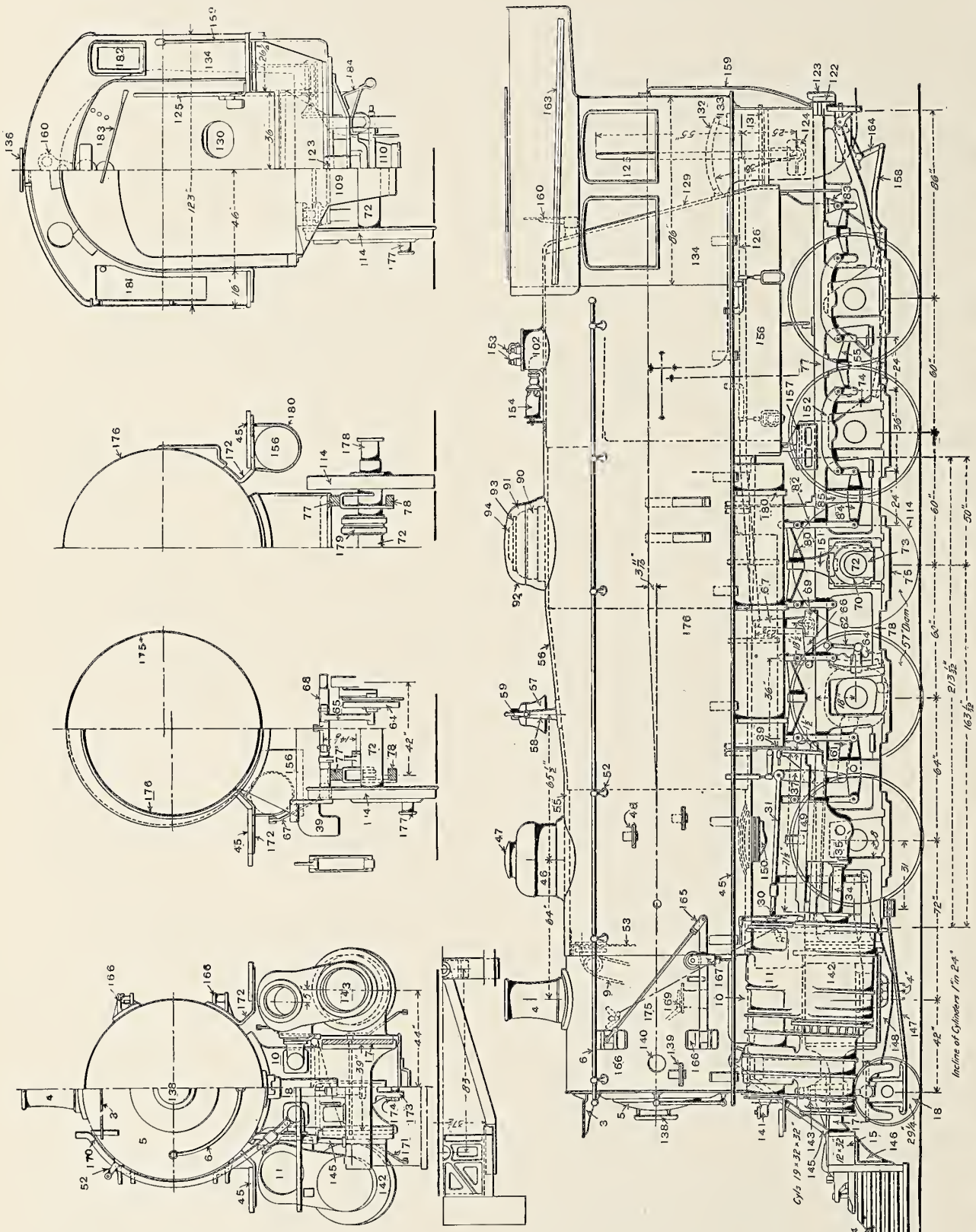

Fig. 116—Decapod (2-10-0) Tandem Compound Locomotive for Freight Service. Built for the Atchison, Topeka & Santa Fe by the Baldwin Locomotive Works. Cylinders, 19 in. and 32 in. x 32 in. Steam Pressure, 225 lbs. Diameter of Drivers, 57 in. Tractive Effort, 62,700 lbs. Heating Surface—Tubes, 5,156 sq. ft.; Firebox, 234 sq. ft.; Total, 5,390 sq. ft. Grate Area, 58.5 sq. ft. Rigid Wheel Base, 20 ft. 4 in. Weight on Drivers, 237,800 lbs. Total Weight of Engine, 267,800 lbs. Fuel. Soft Coal.

Numbers Refer to Names of Parts on Pages 191-192.

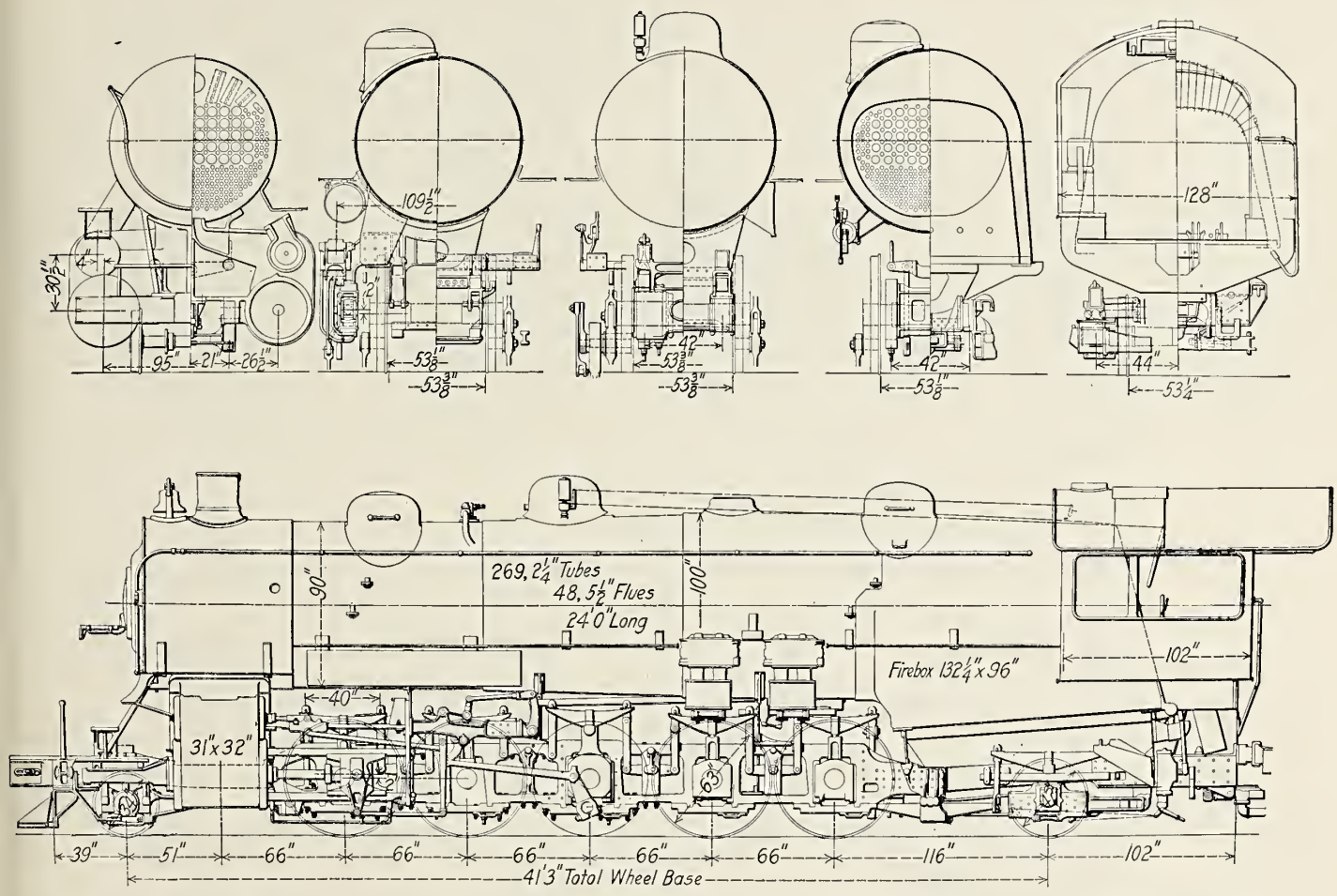

Fig. 117—Santa Fe Type (2-10-2) Locomotive for Freight Service. Built for the Erie by the Baldwin Locomotive Works.

GENERAL DATA.

Gage	4 ft. 8½ in.
Service	Freight
Fuel	Soft Coal
Tractive Effort	83,000 lbs.
Weight in Working Order	407,700 lbs.
Weight on Drivers	327,250 lbs.
Weight on Leading Truck	24,450 lbs.
Weight on Trailing Truck	56,000 lbs.
Weight of Engine and Tender in Working Order	586,300 lbs.
Wheel Base, Driving	22 ft.
Wheel Base, Total	41 ft. 3 in.
Wheel Base, Engine and Tender	77 ft. 4½ in.

RATIOS.

Weight on Drivers ÷ Tractive Effort	3.94
Total Weight ÷ Tractive Effort	4.90
Tractive Effort × Diameter Drivers ÷ Equivalent Heating Surface*	664.72
Equivalent Heating Surface* ÷ Grate Area	89.29
Firebox Heating Surface ÷ Equivalent Heating Surface,* per cent	4.57
Weight on Drivers ÷ Equivalent Heating Surface*	41.60
Total Weight ÷ Equivalent Heating Surface*	51.83
Volume Both Cylinders	27.95 cu. ft.
Equivalent Heating Surface* ÷ Volume Cylinders	281.45
Grate Area ÷ Volume Cylinders	3.15

CYLINDERS.

Kind	Simple
Diameter and Stroke	31 in. x 32 in.

VALVES.

Kind	Piston
Diameter	16 in.

WHEELS.

Driving, Diameter Over Tires	63 in.
Driving, Thickness of Tires	3½ in.
Driving Journals, Main, Diameter and Length	13 in. x 22 in.
Driving Journals, Others, Diameter and Length	11 in. x 13 in.
Engine Truck Wheels, Diameter	34 in.
Engine Truck, Journals	6 in. x 12 in.
Trailing Truck Wheels, Diameter	42 in.
Trailing Truck, Journals	9 in. x 14 in.

BOILER.

Style	Conical
Working Pressure	200 lbs. per sq. in.
Outside Diameter of First Ring	90 in.
Firebox, Length and Width	132¼ in. x 96 in.
Firebox Plates, Thickness	⅜ in. and ⅝ in.
Firebox, Water Space	6 in.
Tubes, Number and Outside Diameter	269—2¼ in.
Flues, Number and Outside Diameter	48—5½ in.
Tubes and Flues, Length	24 ft.
Heating Surface, Tubes and Flues	5,443 sq. ft.
Heating Surface, Firebox	358 sq. ft.
Heating Surface, Total	5,801 sq. ft.
Superheater Heating Surface	1,377 sq. ft.
Equivalent Heating Surface*	7,866.5 sq. ft.
Grate Area	88 sq. ft.

TENDER.

Weight	178,600 lbs.
Wheels, Diameter	33 in.
Journals, Diameter and Length	6 in. x 11 in.
Water Capacity	10,000 gals.
Coal Capacity	16 tons

* Equivalent Heating Surface = Total Evaporative Heating Surface + 1.5 Times the Superheating Surface.

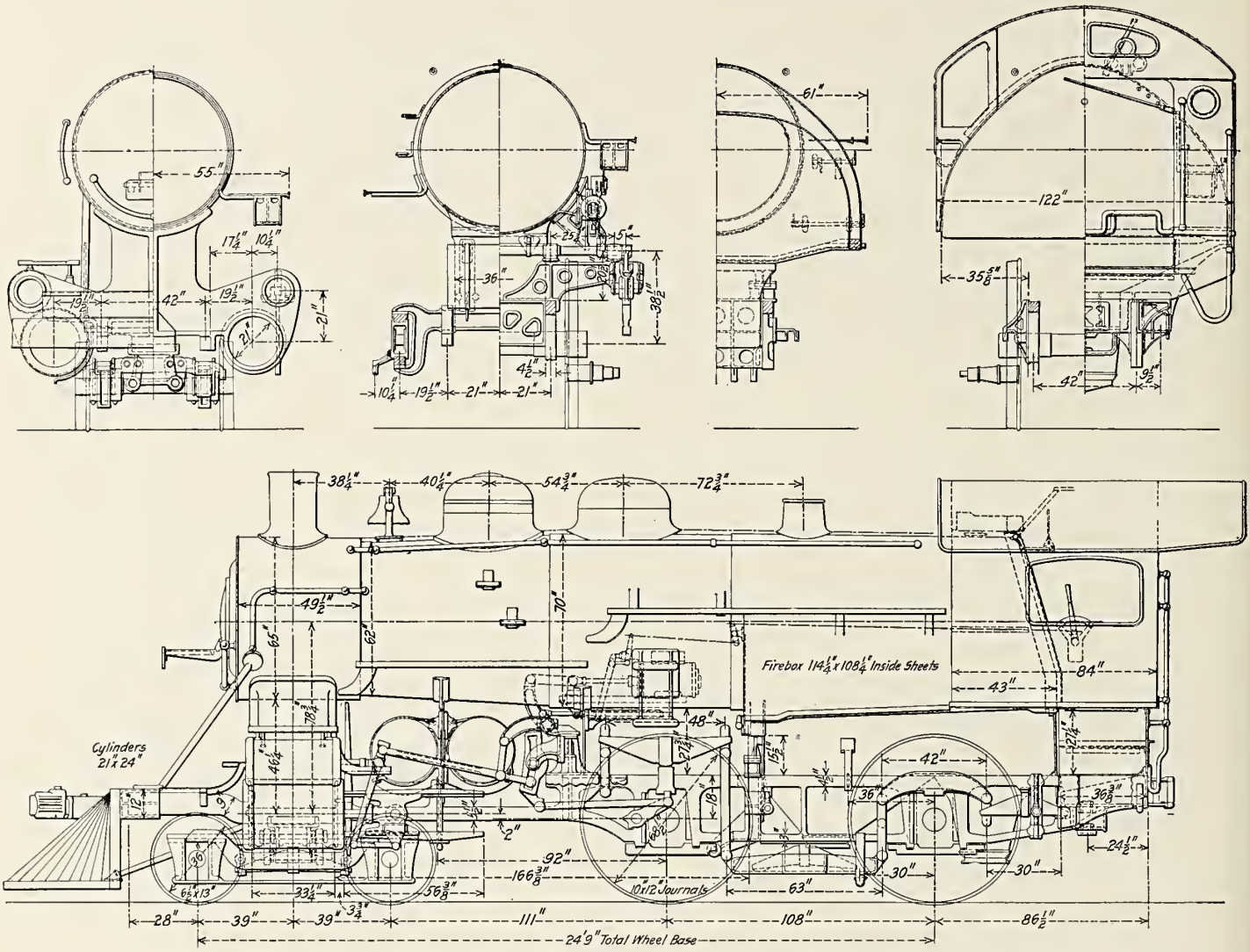

Fig. 118—American Type (4-4-0) Locomotive for Passenger Service. Built for the Philadelphia & Reading by the Baldwin Locomotive Works.

GENERAL DATA.

Gage	4 ft. 8½ in.
Service	Passenger
Fuel	Anthracite Coal
Tractive Effort	27,850 lbs.
Weight in Working Order	173,490 lbs.
Weight on Drivers	120,530 lbs.
Weight on Leading Truck	52,960 lbs.
Weight of Engine and Tender in Working Order	320,000 lbs.
Wheel Base, Driving	9 ft.
Wheel Base, Total	24 ft. 9 in.
Wheel Base, Engine and Tender	56 ft. 11⅜ in.

RATIOS.

Weight on Drivers ÷ Tractive Effort	4.32
Total Weight ÷ Tractive Effort	6.23
Tractive Effort × Diameter Drivers ÷ Equivalent Heating Surface*	1,003.00
Equivalent Heating Surface* ÷ Grate Area	22.10
Weight on Drivers ÷ Equivalent Heating Surface*	63.40
Total Weight ÷ Equivalent Heating Surface*	91.30

CYLINDERS.

Kind	Simple
Diameter and Stroke	21 in. x 24 in.

VALVES.

Kind	Piston
Diameter	11 in.
Greatest travel	7 in.
Outside Lap	1¼ in.
Inside Clearance	¼ in.
Lead in Full Gear	¼ in.

WHEELS.

Driving, Diameter Over Tires	68½ in.
Driving Journals, Main, Diameter and Length	10 in. x 12 in.
Driving Journals, Others, Diameter and Length	10 in. x 12 in.
Engine Truck Wheels, Diameter	36 in.
Engine Truck, Journals	6½ in. x 13 in.

BOILER.

Style	Conical
Working Pressure	210 lbs. per sq. in.
Outside Diameter of First Ring	62 in.
Firebox, Length and Width	114¼ in. x 108¼ in.
Firebox Plates, Thickness	⅝ in.
Firebox, Water Space	4 in. and 5 in.
Tubes, Number and Outside Diameter	208—1¾ in.
Flues, Number and Outside Diameter	22—5¼ in.
Tubes and Flues, Length	10 ft. 5 in.
Heating Surface, Tubes and Flues	1,297 sq. ft.
Heating Surface, Firebox	220 sq. ft.
Heating Surface, Total	1,517 sq. ft.
Superheater Heating Surface	257 sq. ft.
Equivalent Heating Surface*	1,902 sq. ft.
Grate Area	86 sq. ft.

TENDER.

Weight	146,510 lbs.
Wheels, Diameter	36 in.
Journals, Diameter and Length	5¾ in. x 10½ in.
Water Capacity,	7,000 gal.
Coal Capacity	10½ tons

* Equivalent Heating Surface = Total Evaporative Heating Surface + 1.5 Times the Superheating Surface.

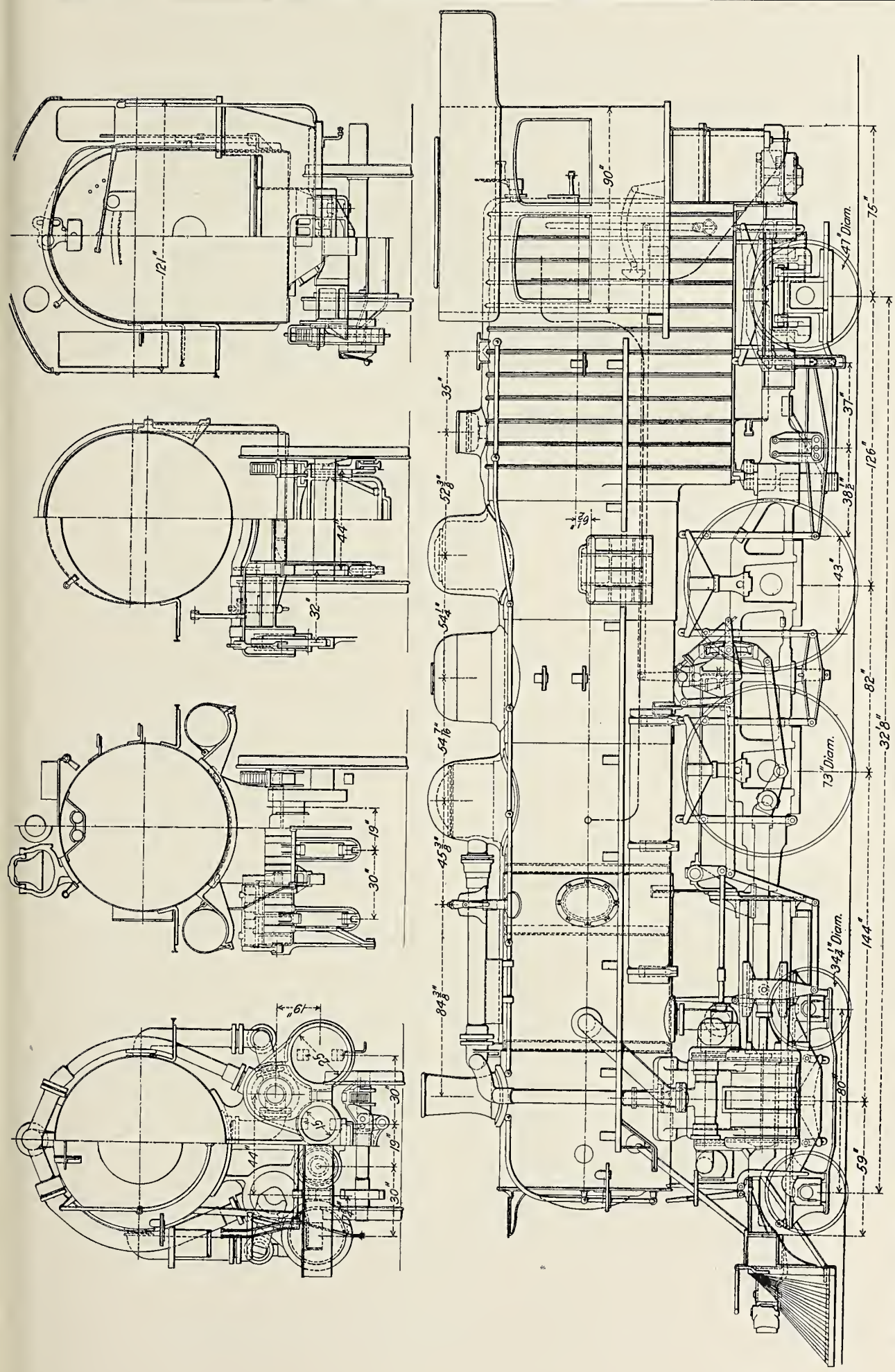

Fig 119—Atlantic Type (4-4-2) Four-Cylinder Balanced Compound Locomotive for Passenger Service. Built for the Atchison, Topeka & Santa Fe by the Baldwin Locomotive Works. Cylinders, 15 in. and 25 in. x 26 in. Steam Pressure, 220 lbs. Diameter of Drivers, 73 in. Tractive Effort, 23,880 lbs. Heating Surface—Tubes, 2,318 sq. ft.; Firebox, 190 sq. ft.; Total, 2,508 sq. ft.; Reheating Surface, 1,147 sq. ft. Grate Area, 48 sq. ft. Rigid Wheel Base, 6 ft. 10 in. Weight on Drivers, 112,125 lbs. Total Weight of Engine, 231,675 lbs. Fuel, Oil.

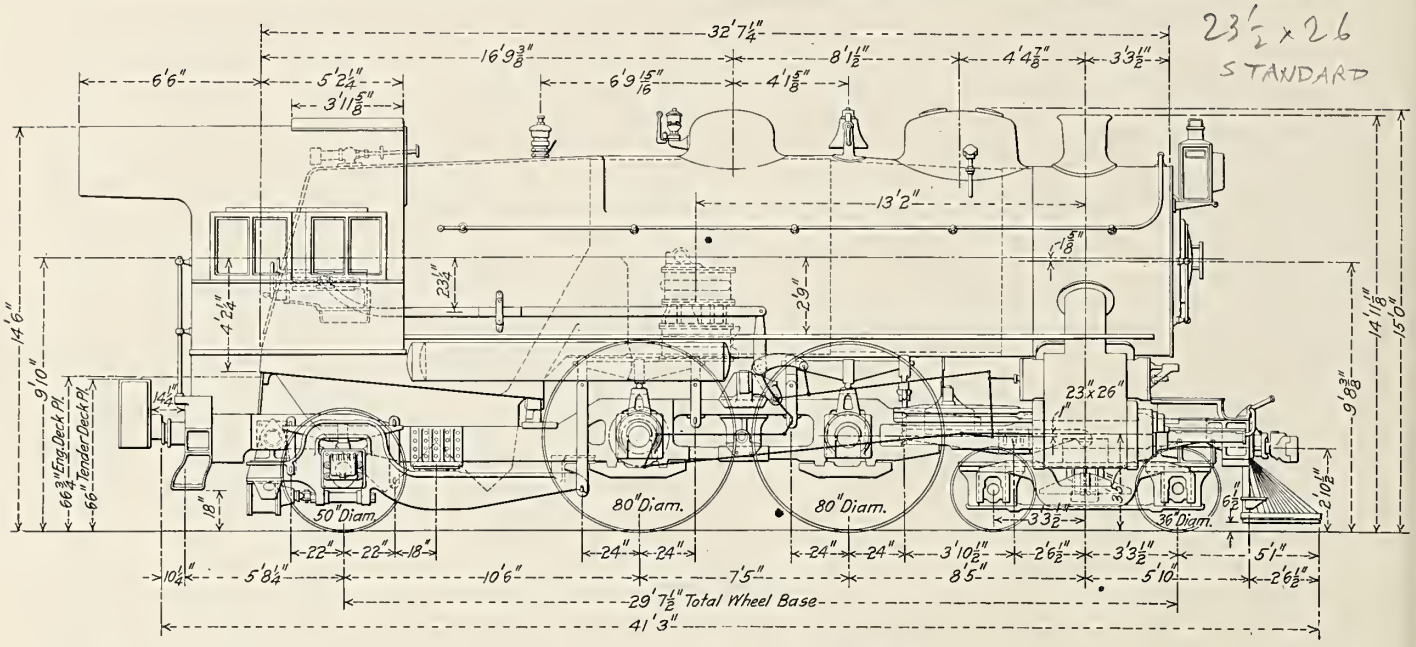

Fig. 120—Atlantic Type (4-4-2) Locomotive for Passenger Service. Built by the Pennsylvania Railroad.

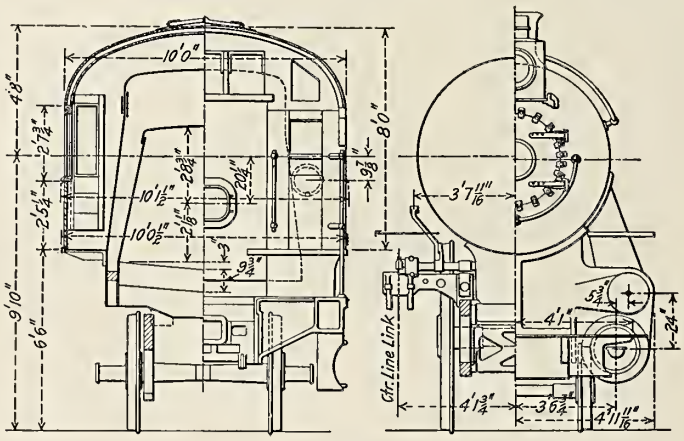

GENERAL DATA.

Gage	4 ft. 9 in.
Service	Passenger
Fuel	Soft Coal
Tractive Effort	29,427 lbs.
Weight in Working Order	240,000 lbs.
Weight on Drivers	133,100 lbs.
Weight on Leading Truck	55,000 lbs.
Weight on Trailing Truck	51,900 lbs.
Weight of Engine and Tender in Working Order	398,000 lbs.
Wheel Base, Driving	7 ft. 5 in.
Wheel Base, Total	29 ft. 7½ in.
Wheel Base, Engine and Tender	63 ft. 10½ in.

RATIOS.

Weight on Drivers ÷ Tractive Effort	4.52
Total Weight ÷ Tractive Effort	8.15
Tractive Effort × Diameter Drivers ÷ Equivalent Heating Surface*	599.00
Equivalent Heating Surface* ÷ Grate Area	71.30
Firebox Heating Surface ÷ Equivalent Heating Surface,* per cent	4.93
Weight on Drivers ÷ Equivalent Heating Surface*	33.80
Total Weight ÷ Equivalent Heating Surface*	61.00
Volume Both Cylinders	13.10 cu. ft.
Equivalent Heating Surface* ÷ Volume Cylinders	300.00
Grate Area ÷ Volume Cylinders	4.21

WHEELS.

Driving, Diameter Over Tires	80 in.
Driving, Thickness of Tires	4 in.
Driving Journals, Main, Diameter and Length	9½ in. x 13 in.
Engine Truck Wheels, Diameter	36 in.
Engine Truck, Journals	5½ in. x 10 in.
Trailing Truck Wheels, Diameter	50 in.

VALVES.

Kind	Piston
Diameter	12 in.
Greatest travel	7 in.
Outside Lap	1 5/16 in.

CYLINDERS.

Kind	Simple
Diameter and Stroke	23½ in. x 26 in.

BOILER.

Style	E. W. T.
Working Pressure	205 lbs. per sq. in.
Outside Diameter of First Ring	78½ in.
Firebox, Length and Width	110½ in. by 72 in.
Firebox Plates, Thickness	5/16 in. and ⅜ in.
Firebox, Water Space	5 in.
Tubes, Number and Outside Diameter	242—2 in.
Flues, Number and Outside Diameter	36—5⅜ in.
Tubes and Flues, Length	15 ft.
Heating Surface, Tubes and Flues	2,660.5 sq. ft.
Heating Surface, Firebox	195.7 sq. ft.
Heating Surface, Total	2,856.2 sq. ft.
Superheater Heating Surface	721 sq. ft.
Equivalent Heating Surface*	3,937.7 sq. ft.
Grate Area	55.13 sq. ft.
Center of Boiler Above Rail	118 in.

TENDER.

Tank	Water Bottom
Weight	158,000 lbs.
Wheels, Diameter	36 in.
Journals, Diameter and Length	5½ in. x 10 in.
Water Capacity	7,000 gal.
Coal Capacity	13 tons

* Equivalent Heating Surface = Total Evaporative Heating Surface + 1.5 Times the Superheating Surface.

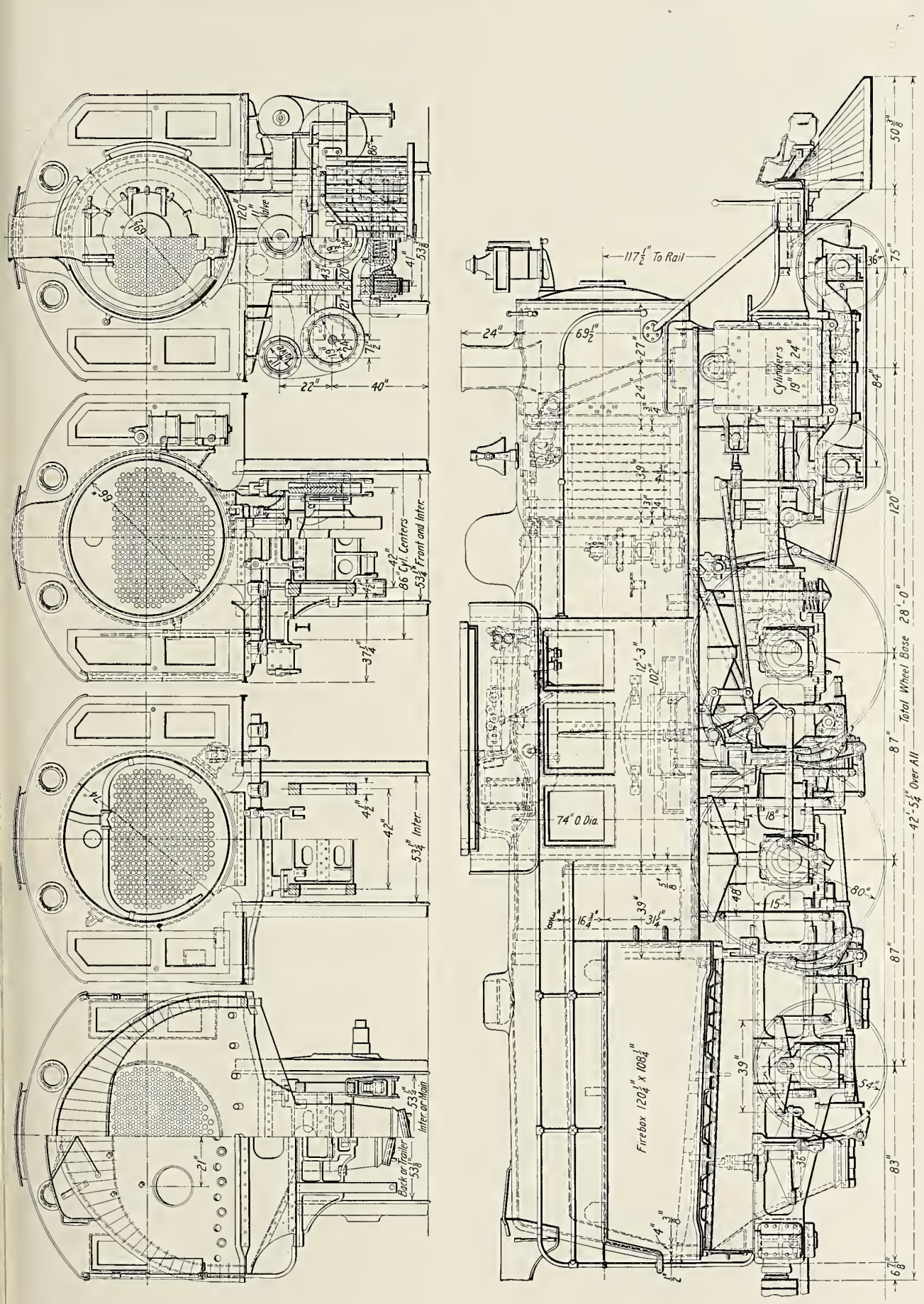

Fig. 121—Atlantic Type (4-4-2) Three-Cylinder Simple Locomotive for Passenger Service. Built by the Philadelphia & Reading. Cylinders, 19 in. x 24 in. Steam Pressure, 240 lbs. Diameter of Drivers, 80 in. Tractive Effort, 33,140 lbs. Heating Surface—Tubes, 3,085 sq. ft.; Firebox, 260 sq. ft.; Total, 3,345 sq. ft. Grate Area, 90 sq. ft. Wheel Base—Driving, 7 ft. 3 in.; Total, 28 ft. Weight on Drivers, 126,925 lbs. Total Weight of Engine, 223,750 lbs. Fuel, Anthracite Coal.

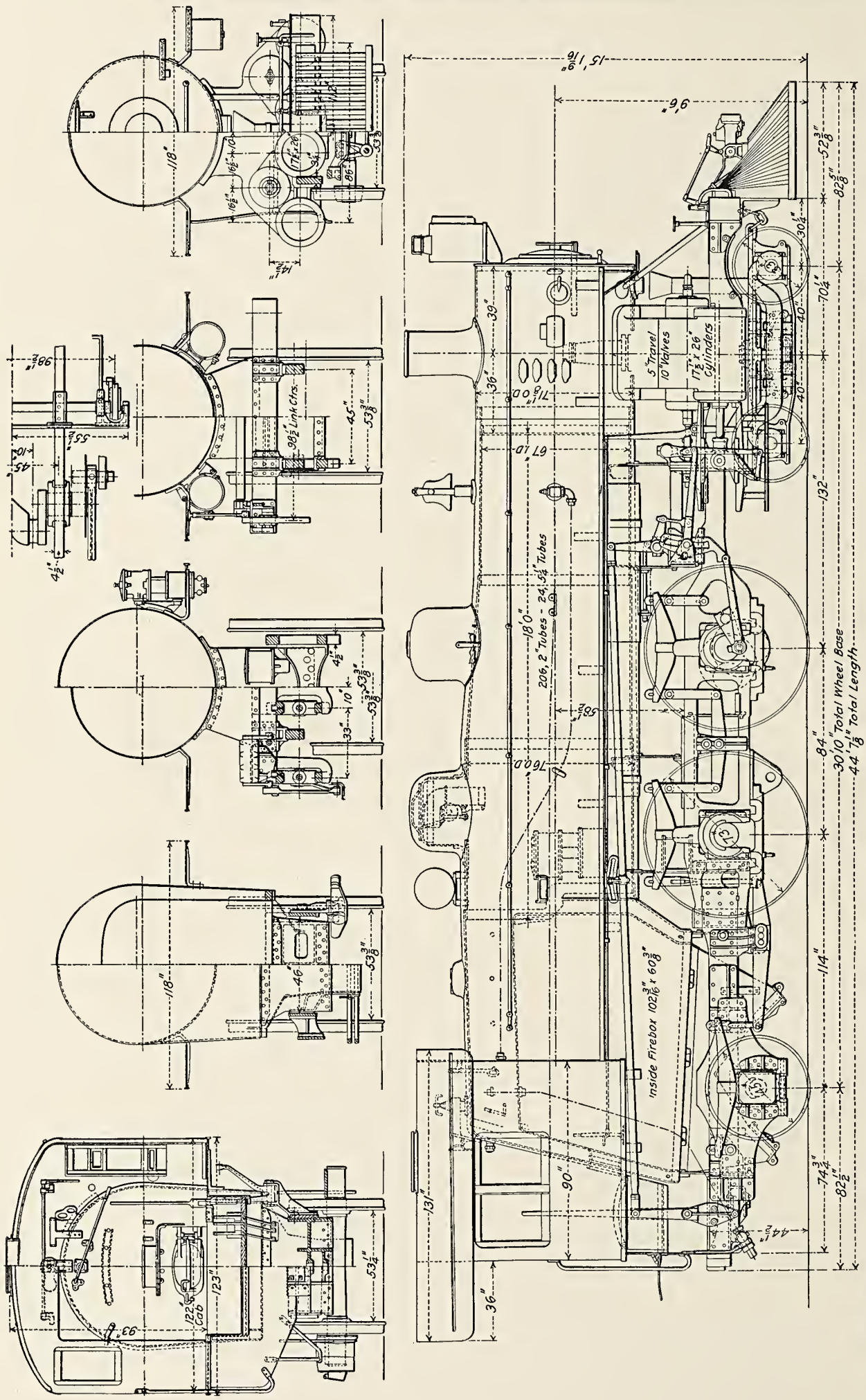

Fig. 122—Atlantic Type (4-4-2) Four-Cylinder Balanced Simple Locomotive for Passenger Service. Built for the Chicago, Rock Island & Pacific by the American Locomotive Company. Cylinders, 17½ in. x 26 in. Steam Pressure, 160 lbs. Diameter of Drivers, 73 in. Tractive Effort, 29,600 lbs. Heating Surface—Tubes, 2,521 sq. ft.; Firebox, 194.5 sq. ft.; Total, 2,715.5 sq. ft.; Superheater Surface, 479 sq. ft. Grate Area, 42.8 sq. ft. Rigid Wheel Base, 7 ft. Weight on Drivers, 116,000 lbs. Total Weight of Engine, 202,000 lbs. Fuel, Soft Coal.

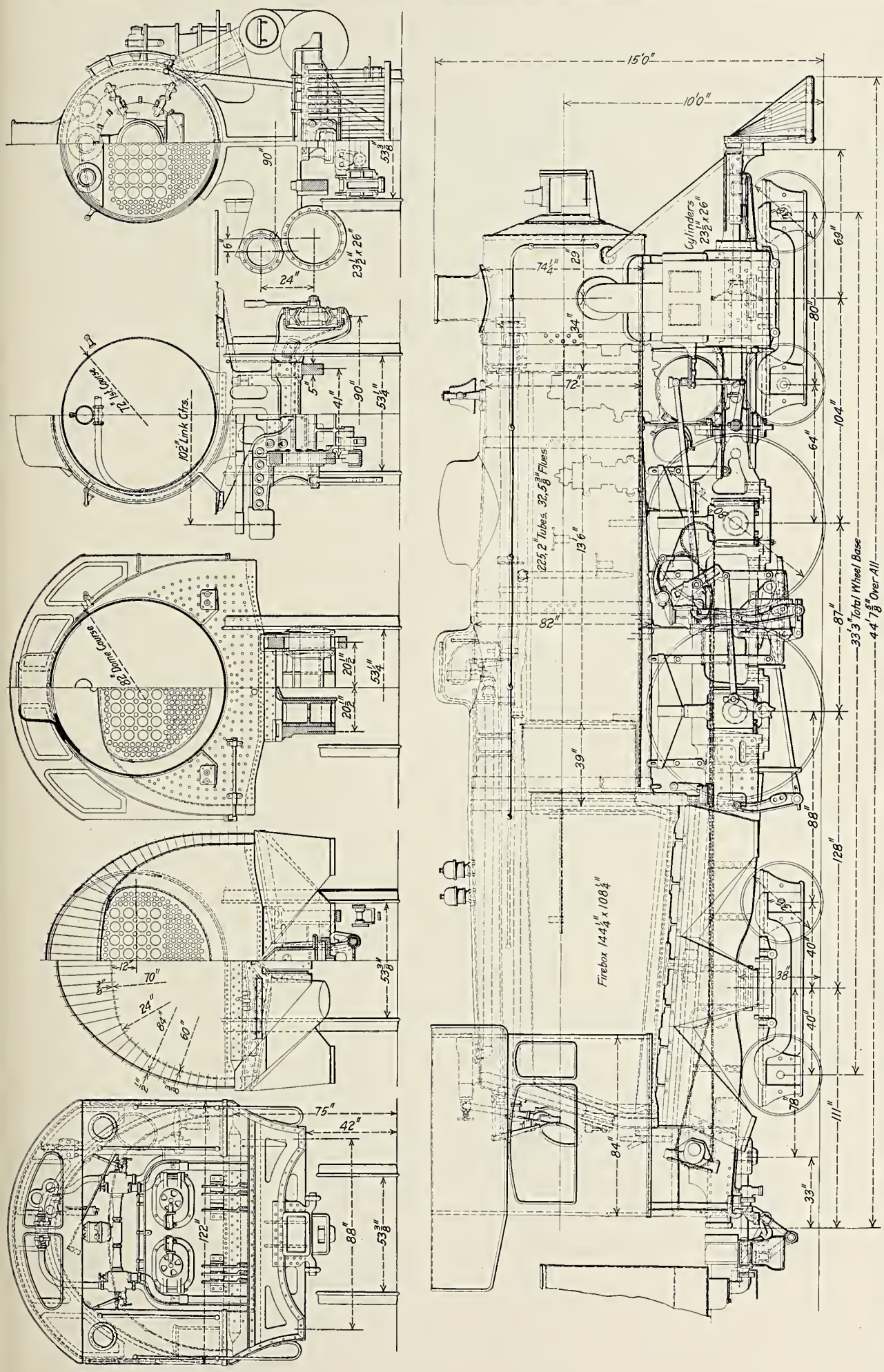

Fig. 123—Reading Type (4-4-4) Locomotive for Passenger Service. Built by the Philadelphia & Reading. Cylinders, 23½ in x 26 in. Steam Pressure, 240 lbs. Diameter of Drivers, 80 in. Tractive Effort, 36,600 lbs. Heating Surface—Tubes, 2,199 sq. ft.; Firebox, 292 sq. ft.; Total, 2,491 sq. ft.; Superheater Surface, 679 sq. ft. Grate Area, 108 sq. ft. Wheel Base—Driving, 7 ft. 3 in.; Total, 33 ft. 3 in. Weight on Drivers, 146,200 lbs. Total Weight of Engine, 230,800 lbs. Fuel, Anthracite Coal.

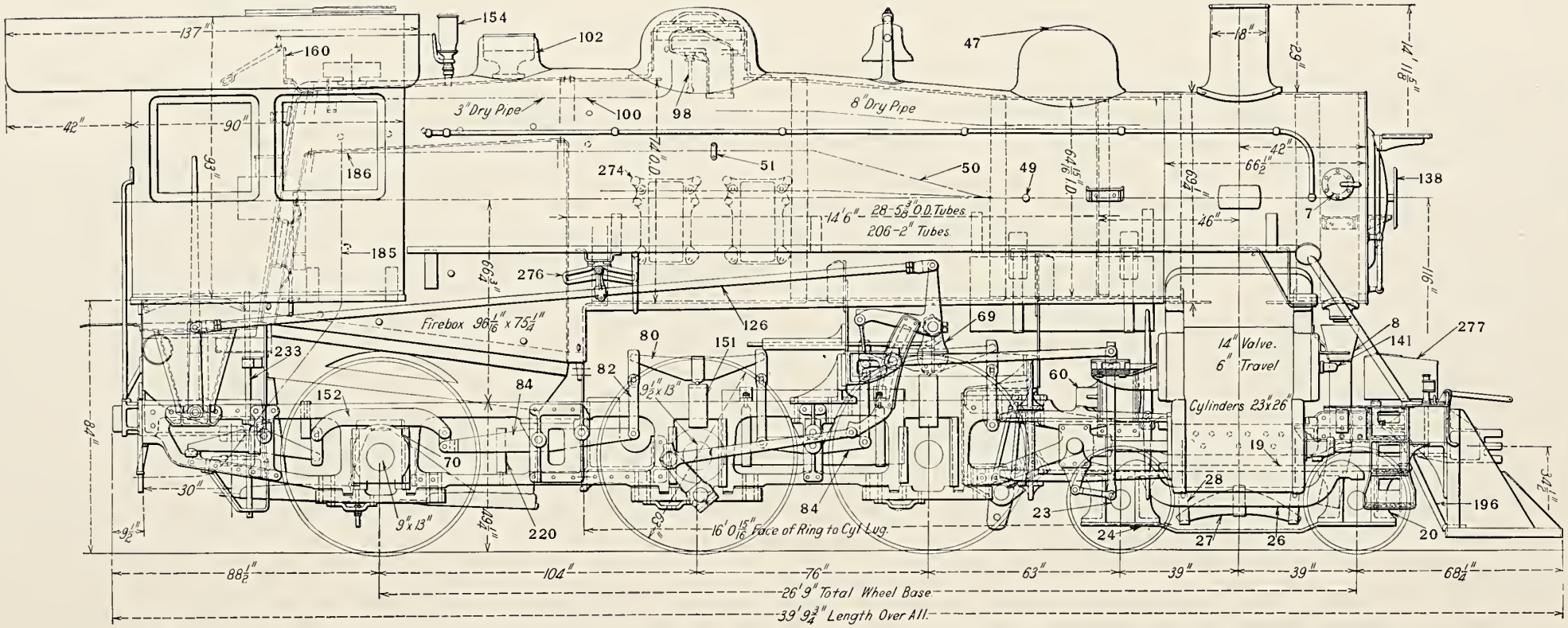

Fig. 124—Ten-Wheel (4-6-0) Locomotive for Passenger Service. Built for the Delaware & Hudson by the American Locomotive Company.

GENERAL DATA.

Gage	4 ft. 8½ in.
Fuel	Soft Coal
Tractive Effort	31,500 lbs.
Weight in Working Order	199,000 lbs.
Weight on Drivers	147,500 lbs.
Weight on Leading Truck	51,500 lbs.
Weight of Engine and Tender in Working Order	344,500 lbs.
Wheel Base, Driving	15 ft.
Wheel Base, Total	26 ft. 9 in.
Wheel Base, Engine and Tender	58 ft. 0½ in.

RATIOS.

Weight on Drivers ÷ Tractive Effort	4.68
Total Weight ÷ Tractive Effort	6.33
Tractive Effort × Diameter Drivers ÷ Equivalent Heating Surface*	685.00
Equivalent Heating Surface* ÷ Grate Area	57.70
Firebox Heating Surface ÷ Equivalent Heating Surface,* per cent.	5.22
Weight on Drivers ÷ Equivalent Heating Surface*	51.00
Total Weight ÷ Equivalent Heating Surface*	68.80
Volume Both Cylinders, cu. ft.	12.48
Equivalent Heating Surface* ÷ Volume Cylinders	232.00
Grate Area ÷ Volume Cylinders	4.02

CYLINDERS.

Kind	Simple
Diameter and Stroke	23 in. x 26 in.

VALVES.

Kind	Piston
Diameter	14 in.
Greatest Travel	6 in.

WHEELS.

Driving, Diameter Over Tires	63 in.
Driving Journals, Main, Diameter and Length	9½ in. x 13 in.
Driving Journals, Others, Diameter and Length	9 in. x 13 in.

BOILER.

Style	Conical
Working Pressure	170 lbs.
Outside Diameter of First Ring	66¼ in.
Firebox, Length and Width	96 1/16 in. x 75¼ in.
Tubes, Number and Outside Diameter	206—2 in.
Flues, Number and Outside Diameter	28—5⅜ in.
Tubes, Length	14 ft. 6 in.
Heating Surface, Tubes and Flues	2,120 sq. ft.
Heating Surface, Firebox	151 sq. ft.
Heating Surface, Total	2,271 sq. ft.
Equivalent Heating Surface*	2,895 sq. ft.
Superheater Heating Surface	416 sq. ft.
Grate Area	50.2 sq. ft.

TENDER.

Water Capacity	6,800 gals.
Coal Capacity	14 tons

*Equivalent Heating Surface Equals 2,271 + (1.5 × 416) = 2,895 sq. ft.

Numbers Refer to Names of Parts on Pages 191-192.

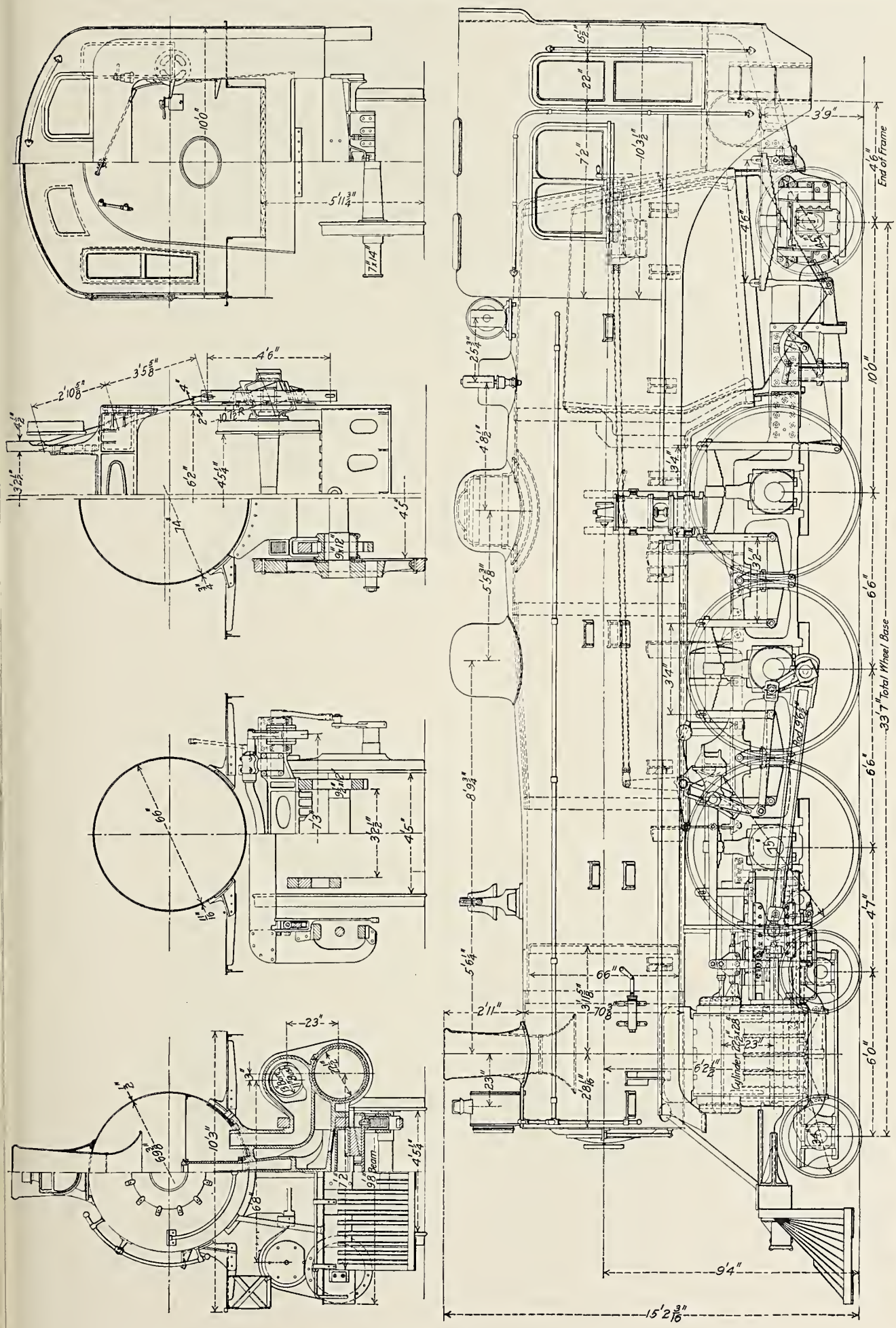

Fig. 125—Pacific Type (4-6-2) Locomotive for Passenger Service. Built by the Canadian Pacific. Cylinders, 22½ in. x 28 in. Steam Pressure, 200 lbs. Diameter of Drivers, 75 in. Tractive Effort, 32,100 lbs. Heating Surface—Tubes, 2,770 sq. ft.; Firebox, 175 sq. ft.; Total, 2,945 sq. ft.; Superheater Surface, 539 sq. ft. Grate Area, 45.6 sq. ft. Wheelbase—Driving, 13 ft.; Total, 33 ft. 7 in. Weight on Drivers, 147,000 lbs. Total Weight of Engine, 224,500 lbs. Fuel, Soft Coal.

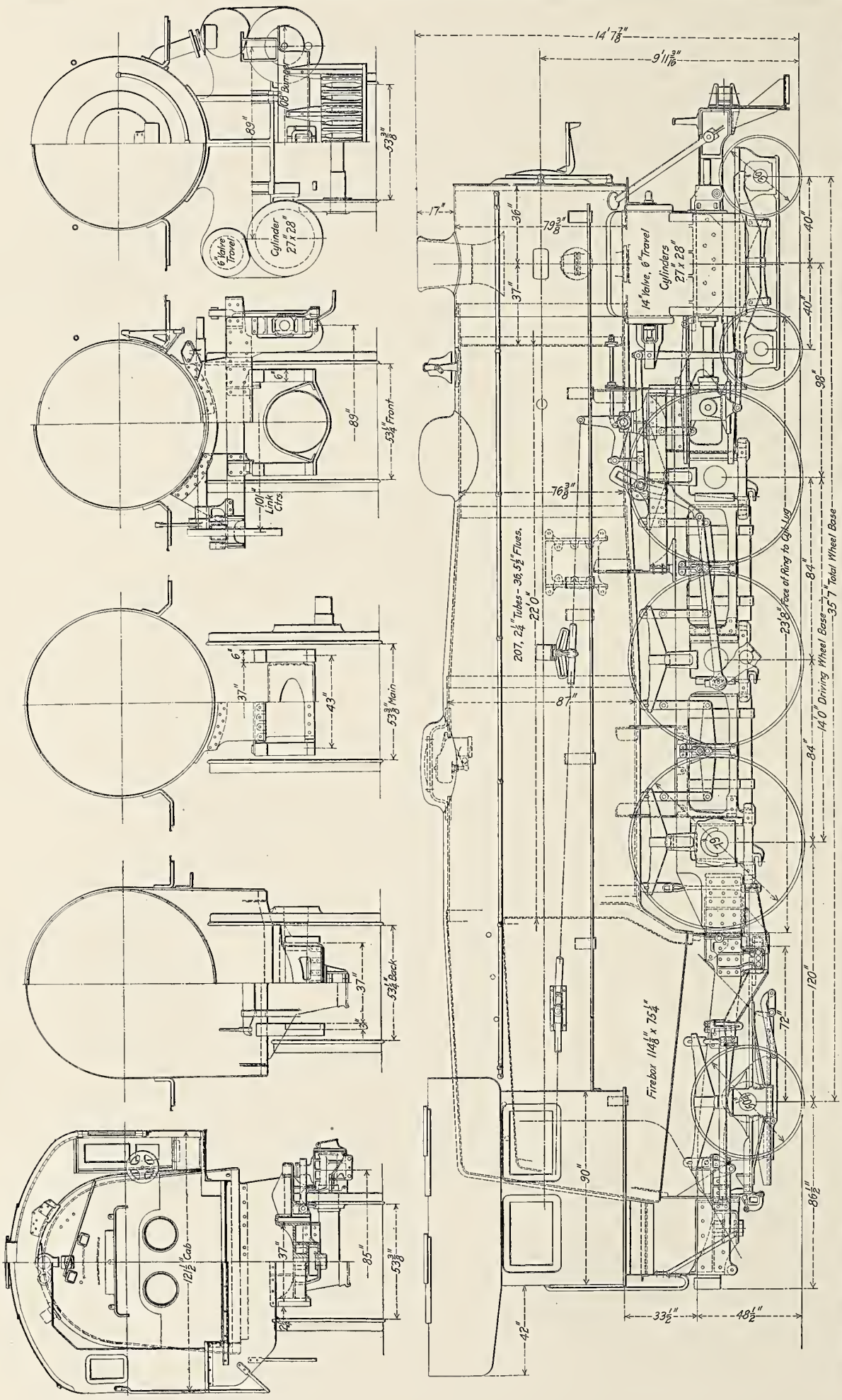

Fig. 126—Pacific Type (4-6-2) Locomotive for Passenger Service. Built for Experimental Purposes by the American Locomotive Company. Cyls., 27 in. x 28 in. Steam Pres., 185 lbs. Dia. of Drivers, 79 in. Tractive Effort, 40,800 lbs. Heat. Sur.—Tubes, 3,800 sq. ft.; Firebox, 248 sq. ft.; Total, 4,048 sq. ft. Superheater Surface, 897 sq. ft. Grate Area, 59.75 sq. ft. Rigid Wheel Base, 14 ft. Wt. on Drivers, 172,500 lbs. Total Wt. of Eng., 269,000 lbs. Fuel, Soft Coal.

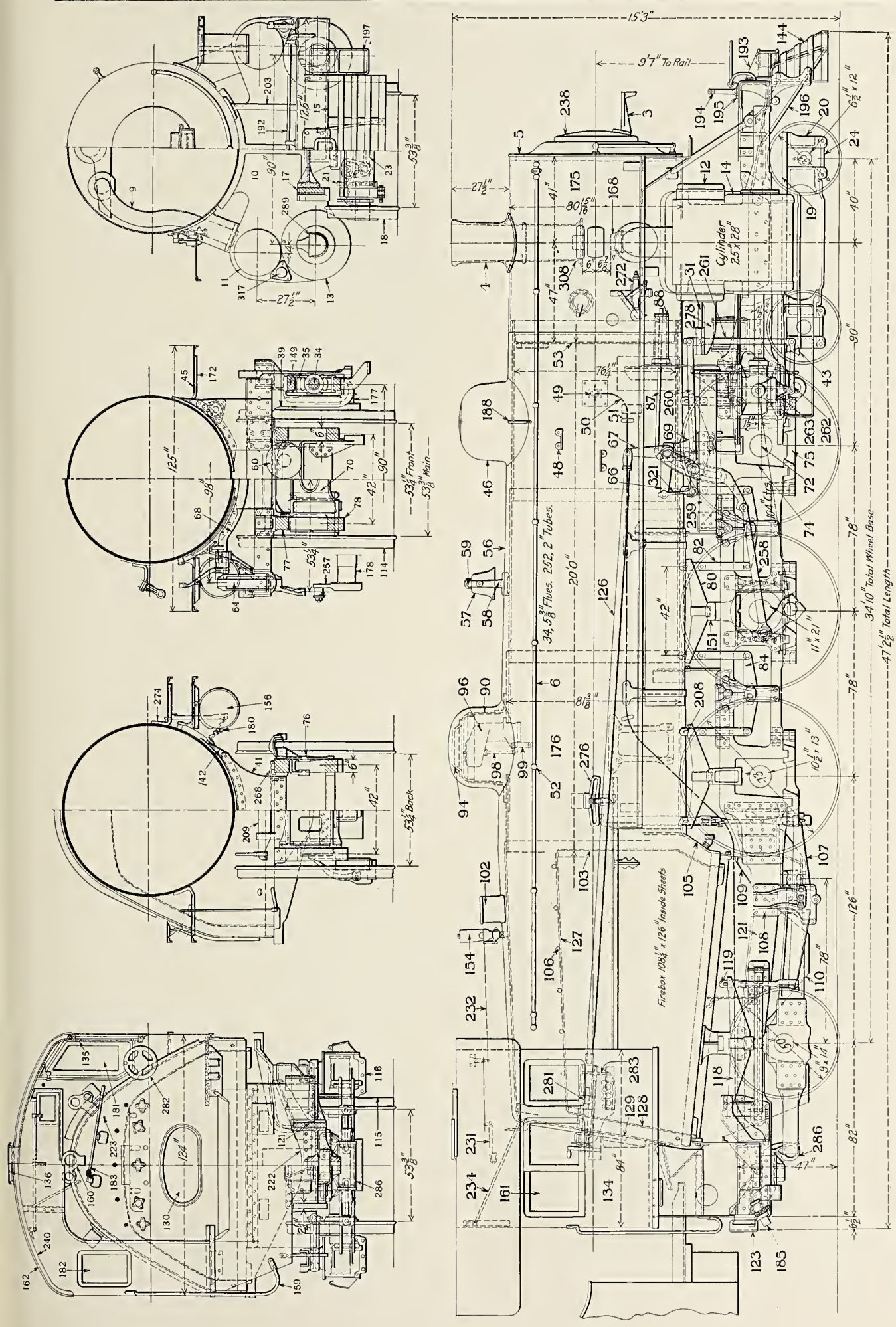

Fig. 127—Pacific Type (4-6-2) Locomotive for Passenger Service. Built for the Lackawanna by the American Locomotive Company. Cyls., 25 in. x 28 in. Steam Pres., 200 lbs. Dia. of Drivers, 73 in. Tractive Effort, 40,800 lbs. Heat. Sur.—Tubes, 3,579 sq. ft.; Firebox, 239 sq. ft.; Total, 3,818 sq. ft.; Superheater Surface, 821 sq. ft. Grate Area, 94.8 sq. ft. Rigid Wheel Base, 13 ft. Wt. on Drivers, 179,500 lbs. Total Wt. of Eng., 284,000 lbs. Fuel, Anthracite Coal.

Numbers Refer to Names of Parts on Pages 191-192.

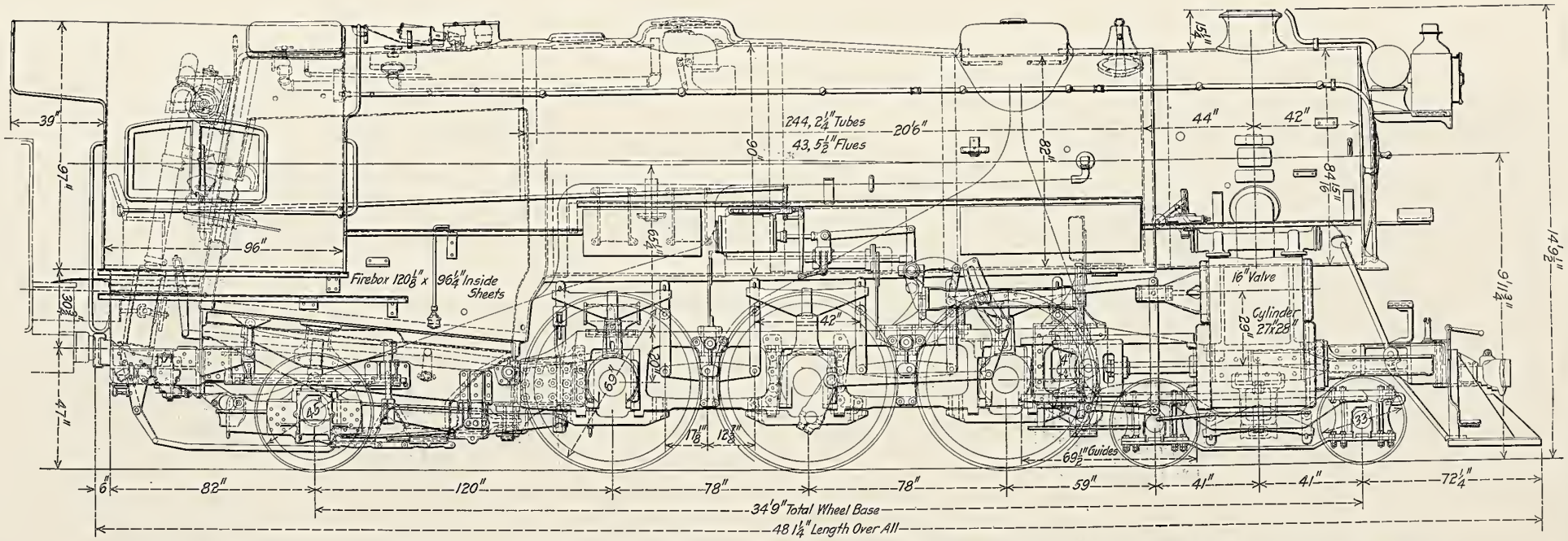

Fig. 128—Pacific Type (4-6-2) Locomotive for Passenger Service. Built for the Chesapeake & Ohio by the American Locomotive Company.

GENERAL DATA.

Gage	4 ft. 8½ in.
Service	Passenger
Fuel	Soft Coal
Tractive Effort	46,600 lbs.
Weight in Working Order	312,605 lbs.
Weight on Drivers	191,455 lbs.
Weight on Leading Truck	56,675 lbs.
Weight on Trailing Truck	64,475 lbs.
Weight of Engine and Tender in Working Order	497,100 lbs.
Wheel Base, Driving	13 ft. 8 in.
Wheel Base, Total	35 ft. 3 in.
Wheel Base, Engine and Tender	71 ft. 5¼ in.

RATIOS.

Weight on Drivers ÷ Tractive Effort	4.12
Total Weight ÷ Tractive Effort	6.72
Tractive Effort × Diameter Drivers ÷ Equivalent Heating Surface*	538.00
Equivalent Heating Surface* ÷ Grate Area	74.30
Firebox Heating Surface ÷ Equivalent Heating Surface,* per cent	4.74
Weight on Drivers ÷ Equivalent Heating Surface*	32.25
Total Weight ÷ Equivalent Heating Surface*	52.30
Volume Both Cylinders	18.55 cu. ft.
Equivalent Heating Surface* ÷ Volume Cylinders	322.00
Grate Area ÷ Volume Cylinders	4.33

CYLINDERS.

Kind	Simple
Diameter and Stroke	27 in. x 28 in.

VALVES.

Kind	Piston
Diameter	16 in.
Greatest Travel	6 in.
Outside Lap	1 in.
Inside Clearance	⅛ in.
Lead in Full Gear	3/16 in.

WHEELS.

Driving, Diameter Over Tires	69 in.
Driving, Thickness of Tires	3½ in.
Driving Journals, Main, Diameter and Length	11½ in. x 23 in.
Driving Journals, Others, Diameter and Length	10½ in. x 14 in.
Engine Truck Wheels, Diameter	33 in.
Engine Truck, Journals	7 in. x 12 in.
Trailing Truck Wheels, Diameter	45 in.
Trailing Truck, Journals	9½ in. x 16 in.

BOILER.

Style	E. W. T.
Working Pressure	185 lbs. per sq. in.
Outside Diameter of First Ring	83 11/16 in.
Firebox, Length and Width	120⅛ in. by 96¼ in.
Firebox Plates, Thickness	⅜ in. and ½ in.
Firebox, Water Space	4½ in. and 5 in.
Tubes, Number and Outside Diameter	244—2¼ in.
Flues, Number and Outside Diameter	43—5½ in.
Tubes and Flues, Length	20 ft. 6 in.
Heating Surface, Tubes and Flues	4,196 sq. ft.
Heating Surface, Firebox	283 sq. ft.
Heating Surface, Total	4,478 sq. ft.
Superheater Heating Surface	991 sq. ft.
Equivalent Heating Surface*	5,965 sq. ft.
Grate Area	80 sq. ft.
Smokestack, Diameter	20 in.
Smokestack, Height Above Rail	177½ in.
Center of Boiler Above Rail	119¾ in.

TENDER.

Tank	Water Bottom
Frame	13 in. Steel Channels
Weight	184,495 lbs.
Wheels, Diameter	36 in.
Journals, Diameter and Length	6 in. x 11 in.
Water Capacity	9,500 gal.
Coal Capacity	14 tons

* Equivalent Heating Surface = Total Evaporative Heating Surface + 1.5 Times the Superheating Surface.

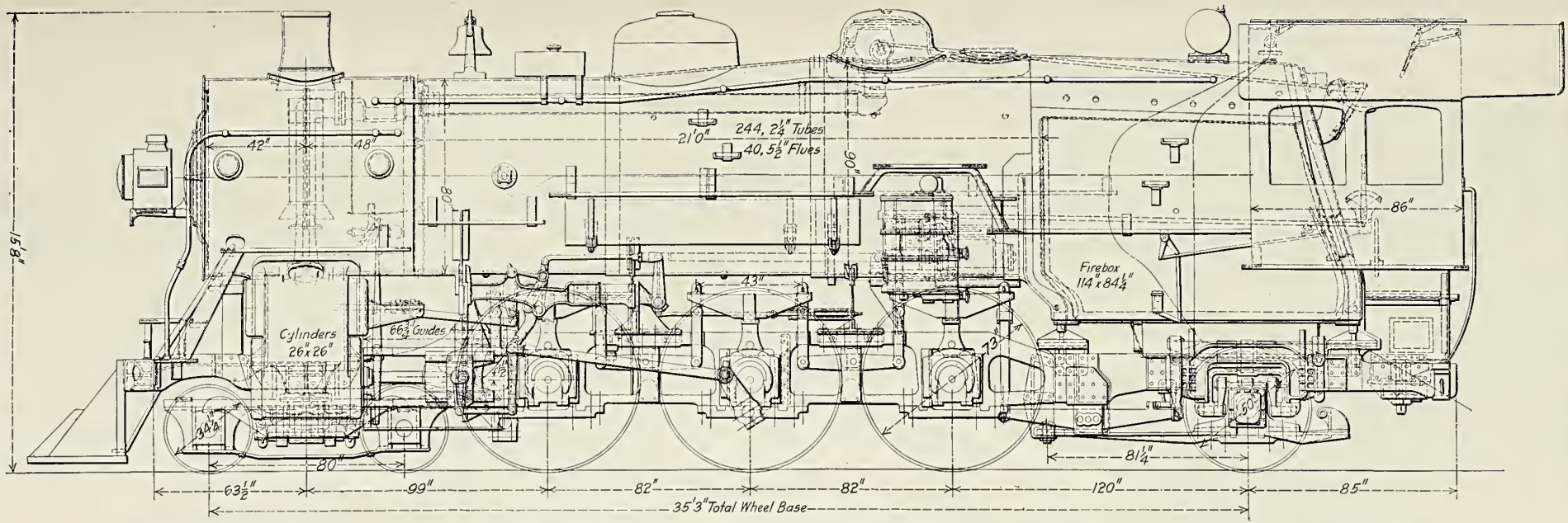

Fig. 129—Pacific Type (4-6-2) Locomotive for Passenger Service. Built for the Atchison, Topeka & Santa Fe by the Baldwin Locomotive Works.

GENERAL DATA.

Gage	4 ft. 8½ in.
Service	Passenger
Fuel	Oil
Tractive Effort	41,000 lbs.
Weight in Working Order	288,700 lbs.
Weight on Drivers	172,550 lbs.
Weight on Leading Truck	59,950 lbs.
Weight on Trailing Truck	56,200 lbs.
Weight of Engine and Tender in Working Order	506,000 lbs.
Wheel Base, Driving	13 ft. 8 in.
Wheel Ease, Total	35 ft. 3 in.
Wheel Base, Engine and Tender	71 ft. 5¼ in.

RATIOS.

Weight on Drivers ÷ Tractive Effort	4.21
Total Weight ÷ Tractive Effort	7.04
Tractive Effort × Diameter Drivers ÷ Equivalent Heating Surface*	506.17
Equivalent Heating Surface* ÷ Grate Area	88.65
Firebox Heating Surface ÷ Equivalent Heating Surface,* per cent	3.92
Weight on Drivers ÷ Equivalent Heating Surface*	29.18
Total Weight ÷ Equivalent Heating Surface*	48.82
Volume Both Cylinders	15.98 cu. ft.
Equivalent Heating Surface* ÷ Volume Cylinders	370.02
Grate Area ÷ Volume Cylinders	4.17

CYLINDERS.

Kind	Simple
Diameter and Stroke	26 in. x 26 in.

VALVES.

Kind	Piston
Diameter	16 in.
Lead in Full Gear	¼ in.

WHEELS.

Driving, Diameter Over Tires	73 in.
Driving, Thickness of Tires	3½ in.
Driving Journals, Main, Diameter and Length	11 in. x 13 in.
Driving Journals, Others, Diameter and Length	11 in. x 13 in.
Engine Truck Wheels, Diameter	34¼ in.
Engine Truck, Journals	7 in. x 12 in.
Trailing Truck Wheels, Diameter	50 in.
Trailing Truck, Journals	8 in. x 14 in.

BOILER

Style	E. W. T.
Working Pressure	200 lbs. per sq. in.
Outside Diameter of First Ring	80 in.
Firebox, Length and Width	114 in. x 84¼ in.
Firebox Plates, Thickness	⅜ in., ½ in.
Forebox, Water Space	4½ in., 5 in.
Tubes, Number and Outside Diameter	244—2¼ in.
Flues, Number and Outside Diameter	40—5½ in.
Tubes and Flues, Length	21 ft.
Heating Surface, Tubes and Flues	4,211 sq. ft.
Heating Surface, Firebox	232 sq. ft.
Heating Surface, Total	4,443 sq. ft.
Superheater Heating Surface	980 sq. ft.
Equivalent Heating Surface*	5,913 sq. ft.
Grate Area	66.70 sq. ft.

TENDER.

Weight	217,300lbs.
Journals, Diameter and Length	5½ in. x 10 in.
Water Capacity	10,000 gal.
Oil Capacity	3,300 gal.

* Equivalent Heating Surface = Total Evaporative Heating Surface + 1.5 times the Superheating Surface.

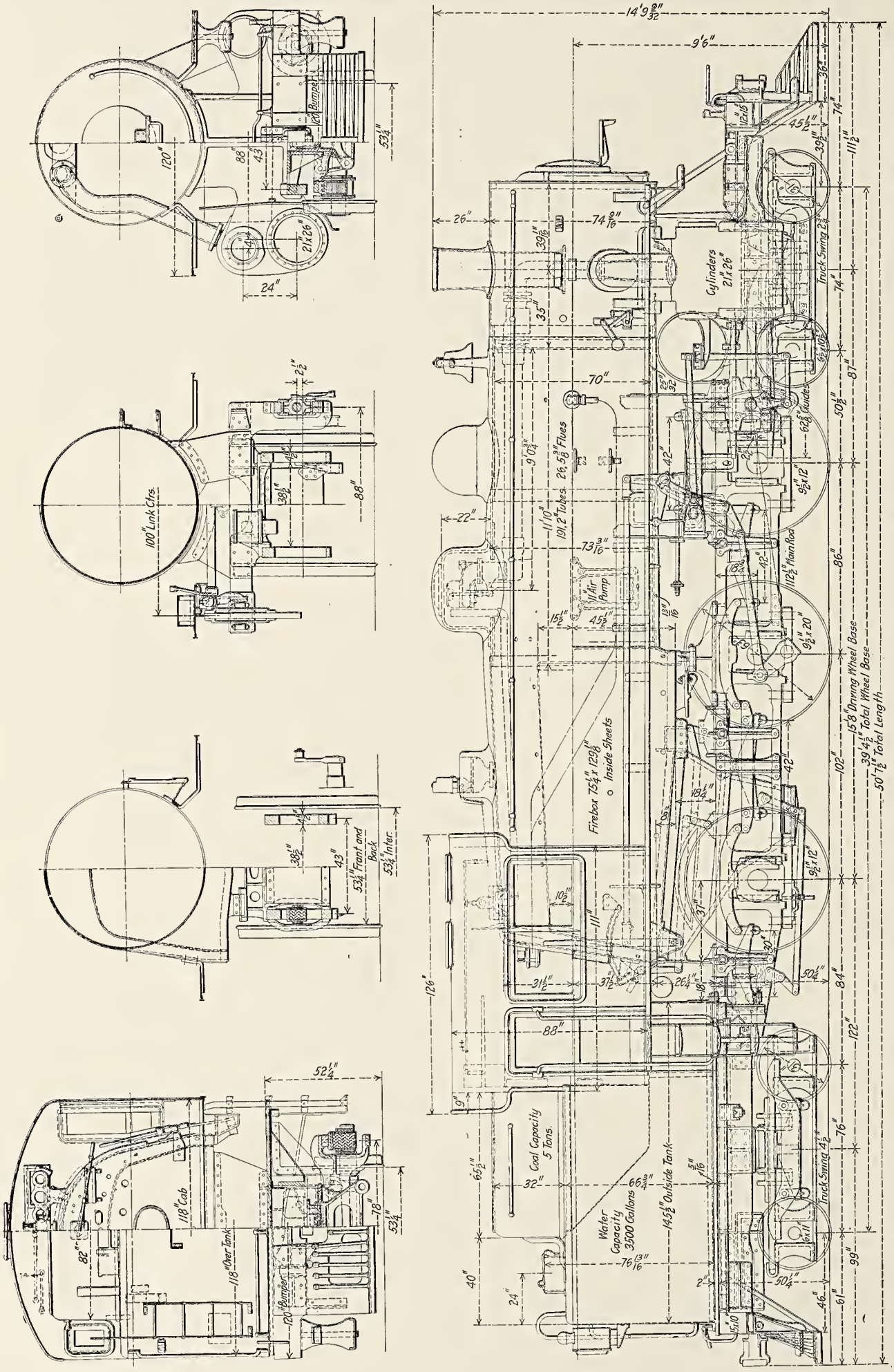

Fig. 130—Suburban Type (4-6-4) Locomotive for Passenger Service. Built by the Montreal Locomotive Works for the Grand Trunk. Cylinders, 21 in. x 26 in. Steam Pressure, 200 lbs. Diameter of Drivers, 63 in. Tractive Effort, 30,940 lbs. Heating Surface—Tubes, 1,604 sq. ft.; Firebox, 204 sq. ft.; Superheater Surface, 347 sq. ft. Grate Area, 47 sq. ft. Wheel Base—Driving, 15 ft. 8 in.; Total, 39 ft. 4½ in. Weight on Drivers, 146,000 lbs. Total Weight of Engine, 262,000 lbs. Fuel, Soft Coal.

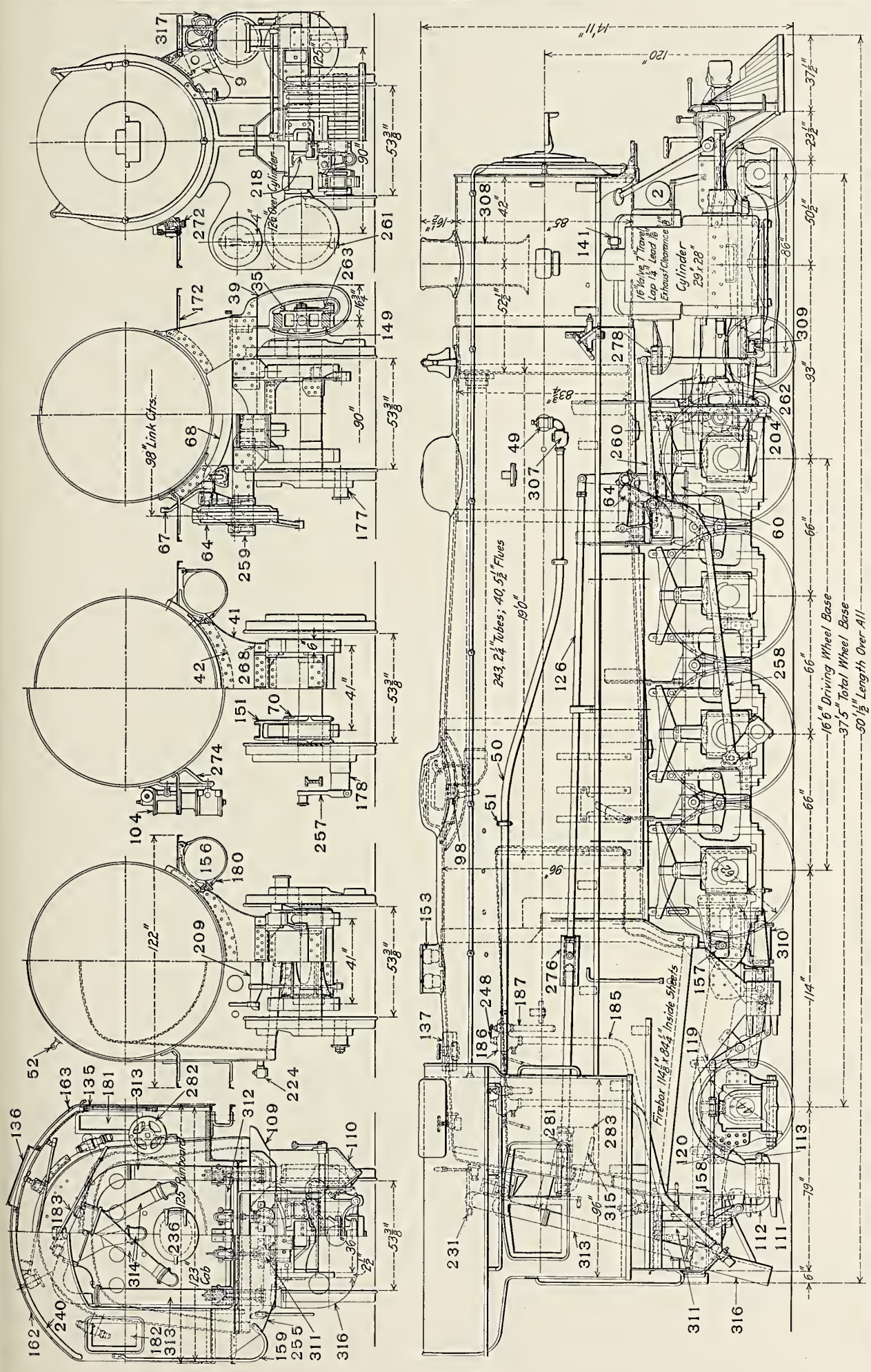

Fig. 131—Mountain Type (4-8-2) Locomotive for Passenger Service. Built for the Chesapeake & Ohio by the American Locomotive Company. Cyls., 29 in. x 28 in. Steam Pres., 180 lbs. Dia. of Drivers, 62 in. Tractive Effort, 58,000 lbs. Heat. Sur.—Tubes, 3,795 sq. ft.; Firebox, 337 sq. ft.; Total, 4,132 sq. ft.; Superheater Surface, 845 sq. ft. Grate Area, 66.7 sq. ft. Rigid Wheel Base, 16 ft. 6 in. Wt. on Drivers, 239,000 lbs. Total Wt. of Eng., 330,000 lbs. Fuel, Soft Coal.

Numbers Refer to Names of Parts on Pages 191-192.

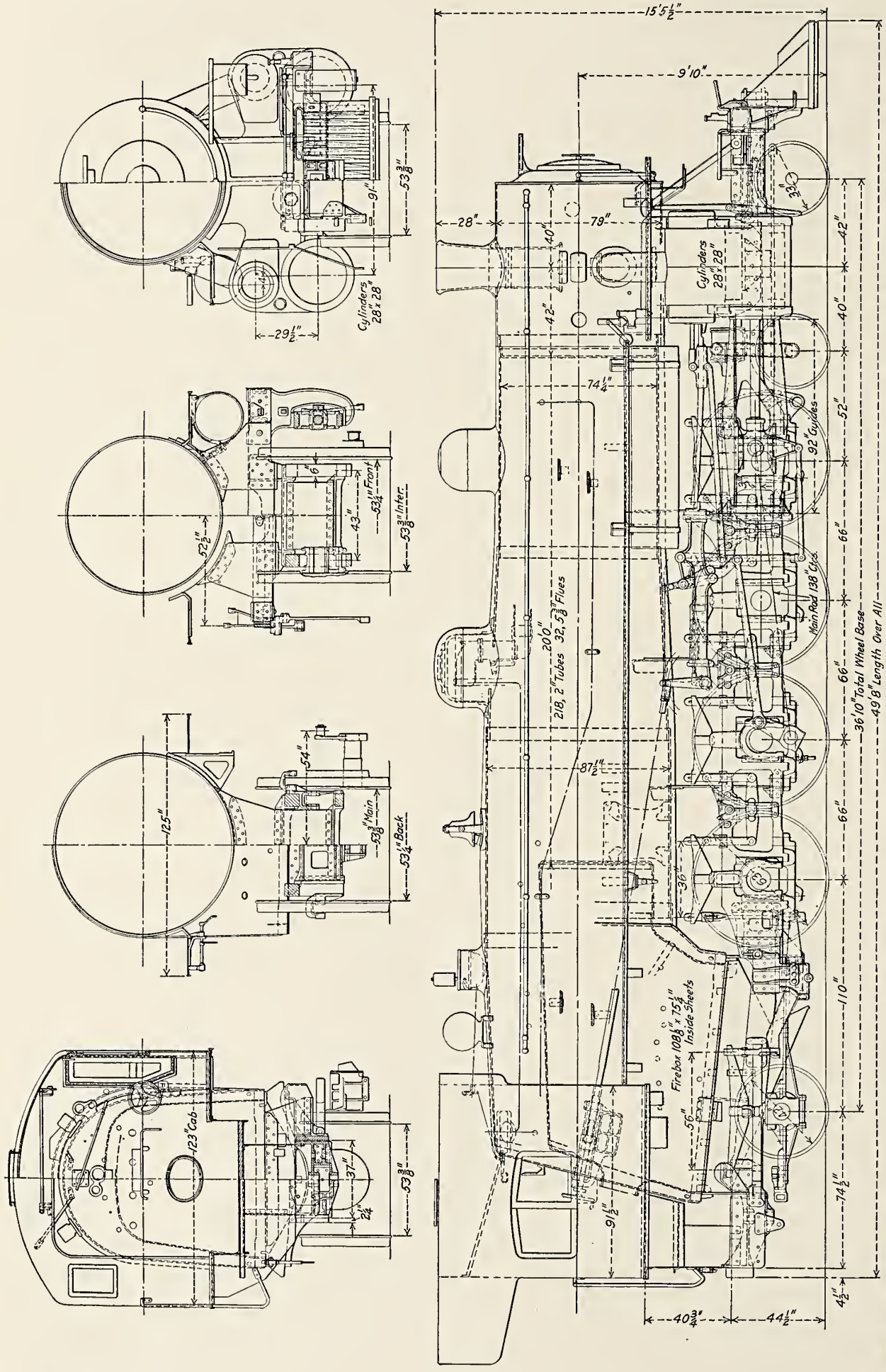

Fig. 132—Mountain Type (4-8-2) Locomotive for Passenger Service. Built by the American Locomotive Company for the Missouri Pacific. Cylinders, 28 in. x 28 in. Steam Pressure, 170 lbs. Diameter of Drivers, 63 in. Tractive Effort, 50,400 lbs. Heating Surface—Tubes, 3,165 sq. ft.; Firebox, 285 sq. ft.; Total, 3,450 sq. ft.; Superheater Surface, 761 sq. ft. Grate Area, 56.5 sq. ft. Wheel Base—Driving, 16 ft. 6 in.; Total, 36 ft. 5 in. Weight on Drivers, 208,000 lbs. Total Weight of Engine, 296,000 lbs. Fuel, Soft Coal.

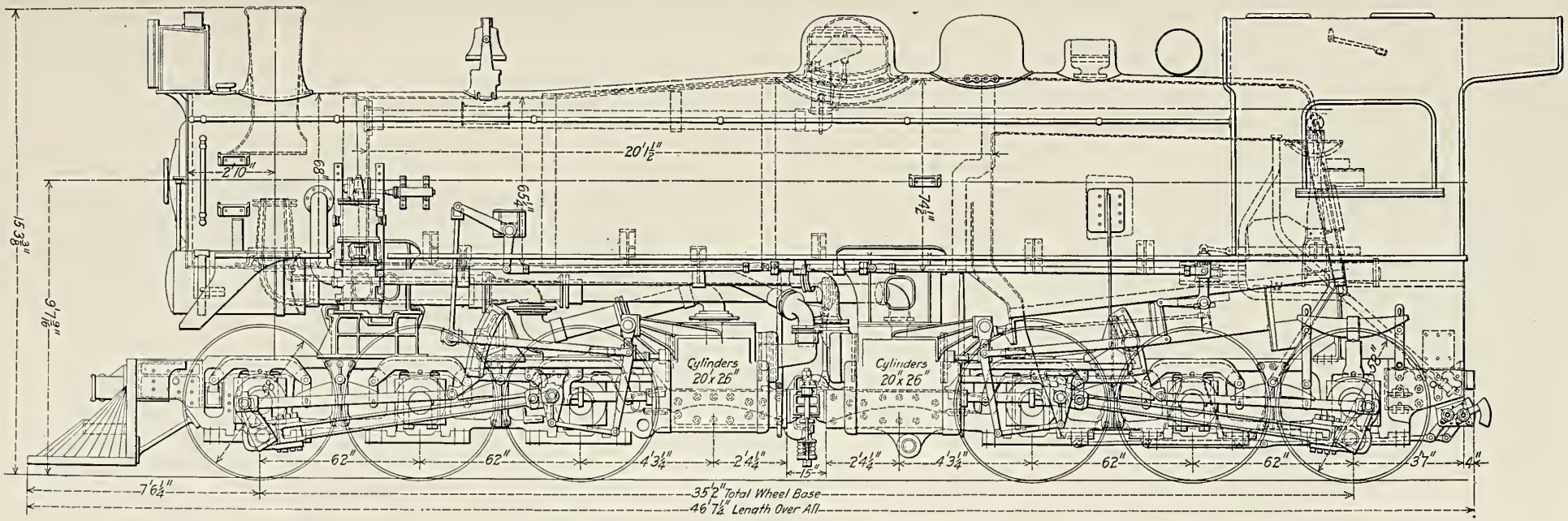

Fig. 133—Mallet Articulated (0-6-6-0) Simple Locomotive for Freight Service. Built by the Canadian Pacific.

GENERAL DATA.

Gage	4 ft. 8½ in.
Fuel	Soft Coal
Tractive Effort	57,500 lbs.
Weight in Working Order	262,000 lbs.
Weight on Drivers	262,000 lbs.
Weight of Engine and Tender in Working Order	395,000 lbs.
Wheel Base, Driving	10 ft. 4 in. and 10 ft. 4 in.
Wheel Base, Total	35 ft. 2 in.
Wheel Base, Engine and Tender	60 ft. 9½ in.

RATIOS.

Weight on Drivers ÷ Tractive Effort	4.55
Total Weight ÷ Tractive Effort	4.55
Tractive Effort × Diameter Drivers ÷ Equivalent Heating Surface*	884.00
Equivalent Heating Surface* ÷ Grate Area	64.00
Firebox Heating Surface ÷ Equivalent Heating Surface,* per cent.	4.90
Weight on Drivers ÷ Equivalent Heating Surface*	69.50
Total Weight ÷ Equivalent Heating Surface*	69.50
Volume all Cylinders, cu. ft.	19.02
Equivalent Heating Surface* ÷ Volume Cylinders	198.00
Grate Area ÷ Volume Cylinders	3.10

CYLINDERS.

Kind	Simple
Number	4
Diameter and Stroke	20 in. x 26 in.

VALVES.

Kind	Piston
Diameter	11 in.
Greatest Travel	6½ in.
Outside Lap	1 in.
Inside Clearance	1/16 in.
Lead in Full Gear	¼ in.

WHEELS.

Driving, Diameter Over Tires	58 in.
Driving Journals, Main, Diameter and Length	9½ in. x 12 in.
Driving Journals, Others, Diameter and Length	9 in. x 12 in.

BOILER.

Style	Ext. Wagon Top
Working Pressure	200 lbs.
Outside Diameter of First Ring	65¼ in.
Firebox, Length and Width	120 in. x 70⅞ in.
Firebox Plates, Thickness	T., ½ in.; B., 7/16 in.; S. & C., ⅜ in.
Firebox, Water Space	S., 4½ in.; F., 5 in.; B., 3½ in.
Tubes, Number and Outside Diameter	167—2¼ in.; 18—2 in.
Flues, Number and Outside Diameter	22—5¼ in.
Tubes, Length	20 ft. 0⅜ in.
Heating Surface, Tubes	2,765 sq. ft.
Heating Surface, Firebox	185 sq. ft.
Heating Surface, Total	2,949 sq. ft.
Equivalent Heating Surface*	3,771 sq. ft.
Superheater Heating Surface	548 sq. ft.
Grate Area	59 sq. ft.

TENDER.

Tank	Semi Water Bottom
Frame	13 in. and 10 in. channels
Wheels, Diameter	36¼ in.
Journals, Diameter and Length	5½ in. x 10 in.
Water Capacity	5,900 gals.
Coal Capacity	12 tons

*Equivalent Heating Surface Equals 2,949 + (1.5 × 548) = 3,771 sq. ft.

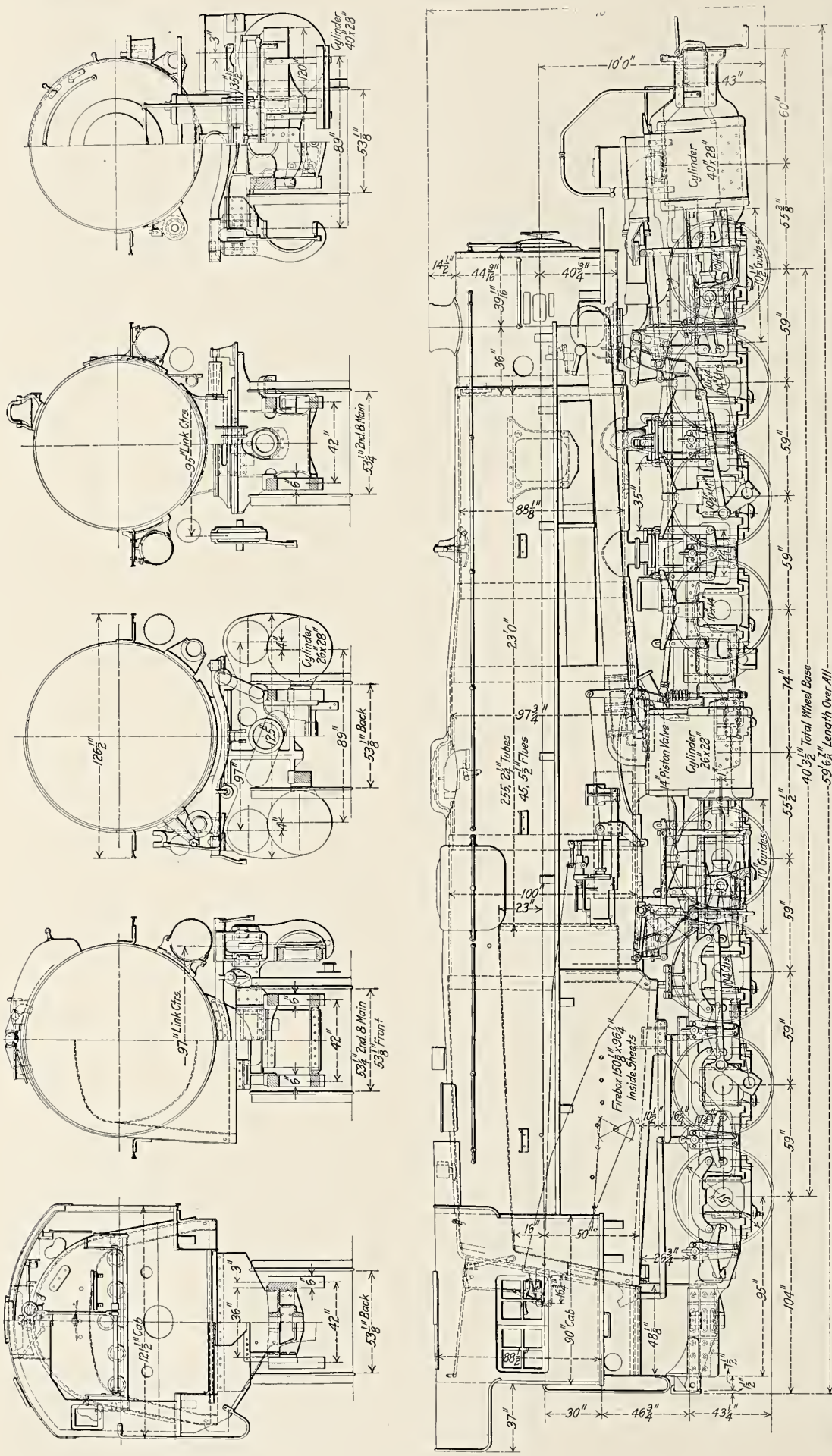

Fig. 134—Mallet Articulated (0-8-8-0) Compound Locomotive for Switching Service. Built by the American Locomotive Company for the Lake Shore & Michigan Southern. Cylinders, 26 in. and 40 in. x 28 in. Steam Pressure, 220 lbs. Diameter of Drivers, 51 in. Tractive Effort, 105,800 lbs. Heating Surface—Tubes, 4,294 sq. ft.; Firebox, 311 sq. ft.; Total, 5,289 sq. ft.; Superheater Surface, 1,235 sq. ft. Grate Area, 81 sq. ft. Wheel Base—Driving, 14 ft. 9 in. and 14 ft. 9 in.; Total, 40 ft. 3½ in. Total Weight of Engine, 466,000 lbs. Fuel, Soft Coal.

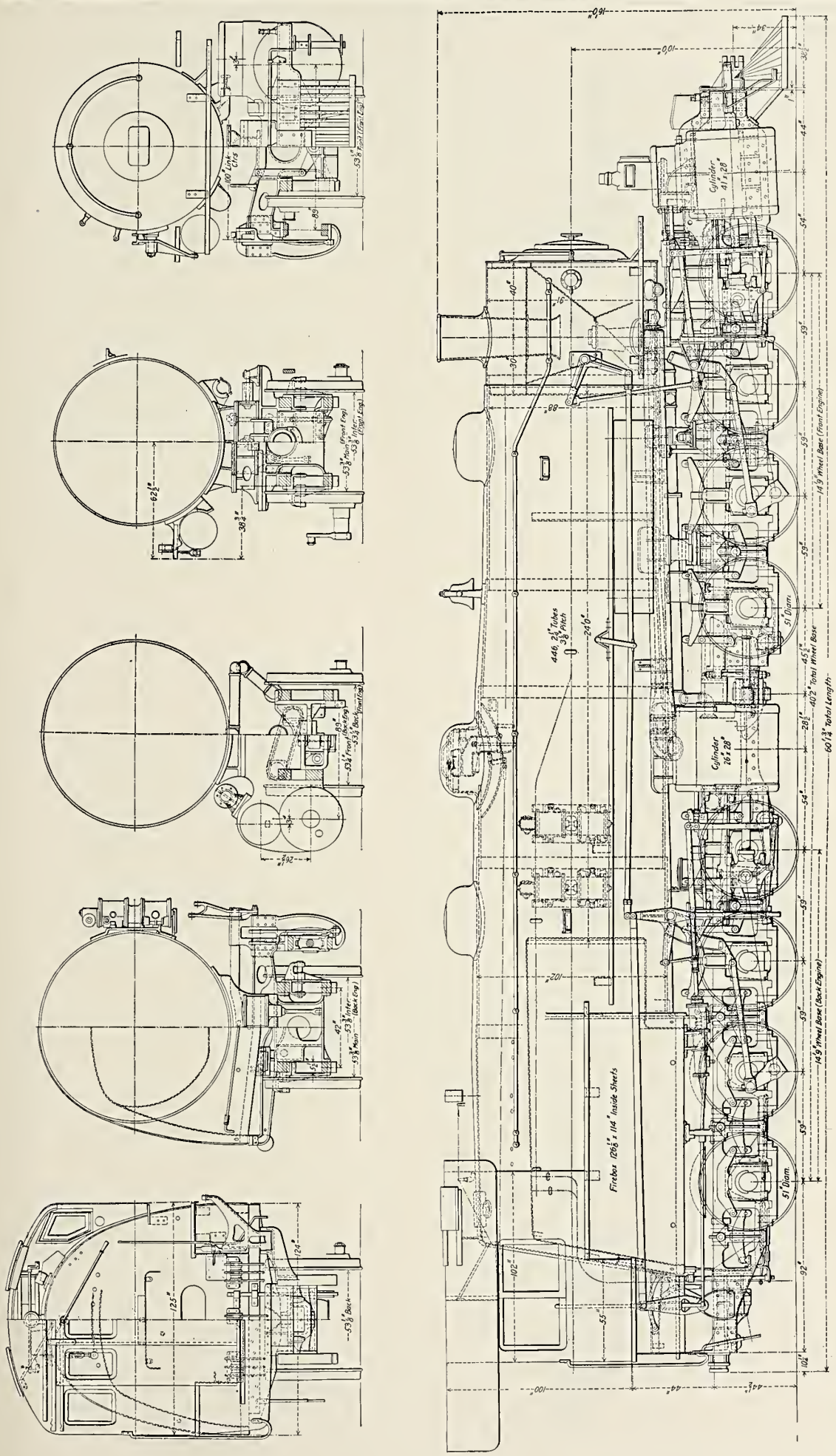

Fig. 135—Mallet Articulated (0-8-8-0) Compound Locomotive for Freight Service. Built for the Delaware & Hudson by the American Locomotive Company. Cylinders, 26 in. and 41 in. x 28 in. Working Steam Pressure, 220 lbs. per sq. in. Diameter of Drivers, 51 in. Tractive Effort, 105,500 lbs. Heating Surface—Tubes, 5,245 sq. ft.; Firebox, 353 sq. ft.; Total, 5,598 sq. ft.; Superheater Surface, 1,106 sq. ft. Grate Area, 100 sq. ft. Rigid Wheel Base, 14 ft. 9 in. Weight on Drivers, 457,000 lbs. Total Weight of Engine, 457,000 lbs. Fuel, Soft Coal.

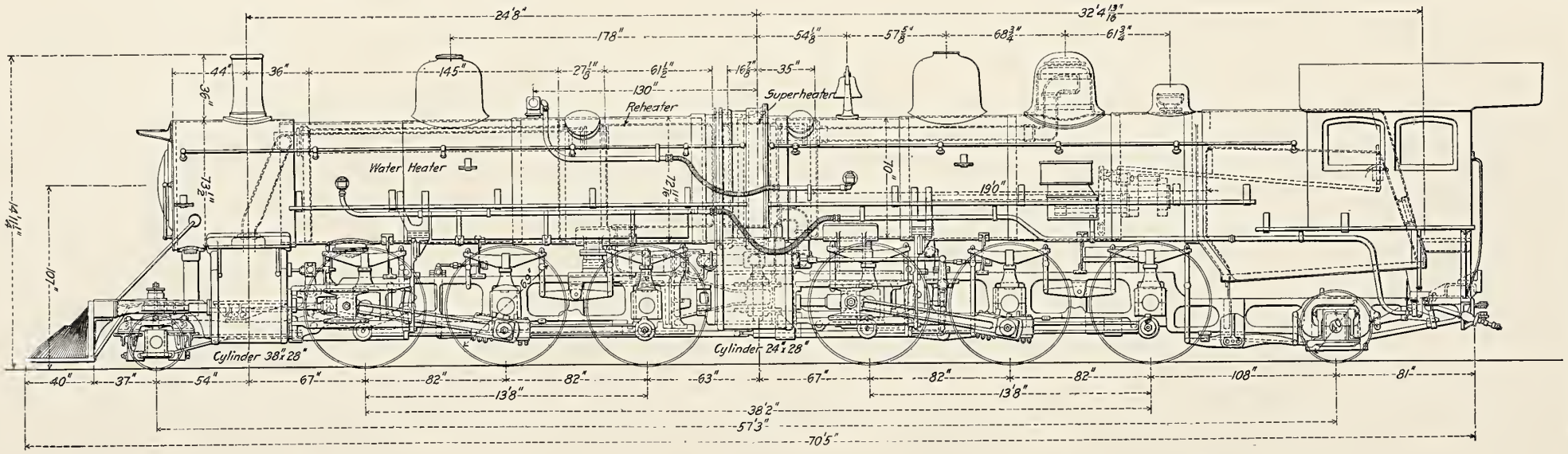

Fig. 136—Mallet Articulated (2-6-6-2) Compound Locomotive with Flexible Boiler for Freight Service. Built by the Atchison, Topeka & Santa Fe and the Baldwin Locomotive Works.

GENERAL DATA.

Gage	4 ft. 8½ in.
Fuel	Soft Coal
Tractive Effort	68,000 lbs.
Weight in Working Order	358,250 lbs.
Weight on Drivers	290,000 lbs.
Weight of Engine and Tender in Working Order	527,950 lbs.
Wheel Base, Driving	13 ft. 8 in. and 13 ft. 8 in.
Wheel Base, Total	57 ft. 3 in.
Wheel Base, Engine and Tender	90 ft. 1 in.

RATIOS.

Weight on Drivers ÷ Tractive Effort	4.26
Total Weight ÷ Tractive Effort	5.20
Tractive Effort × Diameter Drivers ÷ Total Heating Surface	625.00
Total Heating Surface ÷ Grate Area	139.00
Firebox Heating Surface ÷ Total Heating Surface, per cent.	2.60
Weight on Drivers ÷ Total Heating Surface	38.63
Total Weight ÷ Total Heating Surface	47.70
Volume Equivalent Simple Cylinders, cu. ft.	20.60
Total Heating Surface ÷ Volume Cylinders	369.20
Grate Area ÷ Volume Cylinders	2.60

CYLINDERS.

Kind	Compound
Diameter and Stroke	24 in. and 38 in. x 28 in.

VALVES.

Kind	Piston
Diameter	H. P., 13 in.; L. P., 16 in.

WHEELS.

Driving, Diameter Over Tires	69 in.
Driving, Thickness of Tires	3½ in.
Driving Journals, Main, Diameter and Length	10 in. x 12 in.
Driving Journals, Others, Diameter and Length	9 in. x 12 in.
Engine Truck Wheels, Diameter	31¼ in.
Engine Truck, Journals	6½ in. x 12 in.
Trailing Truck Wheels, Diameter	40 in.
Trailing Truck, Journals	8 in. x 14 in.

BOILER.

Style	Flexible Straight Top
Working Pressure	220 lbs.
Outside Diameter of First Ring	70 in.
Firebox, Length and Width	117⅜ in. x 97 in.
Firebox Plates, Thickness	⅜ in. and 9/16 in.
Firebox, Water Space	4½ in. and 4 in.
Tubes, Number and Outside Diameter	318—2¼ in.
Tubes, Length	18 ft. 11 in.
Heating Surface, Tubes	3,546 sq. ft.
Heating Surface, Firebox	195 sq. ft.
Heating Surface, Feed Water Heater	2,216 sq. ft.
Heating Surface, Total	7,507 sq. ft.
Grate Area	54 sq. ft.

TENDER.

Wheels, Diameter	34¼ in.
Journals, Diameter and Length	5½ in. x 10 in.
Water Capacity	9,000 gals.
Coal Capacity	12 tons

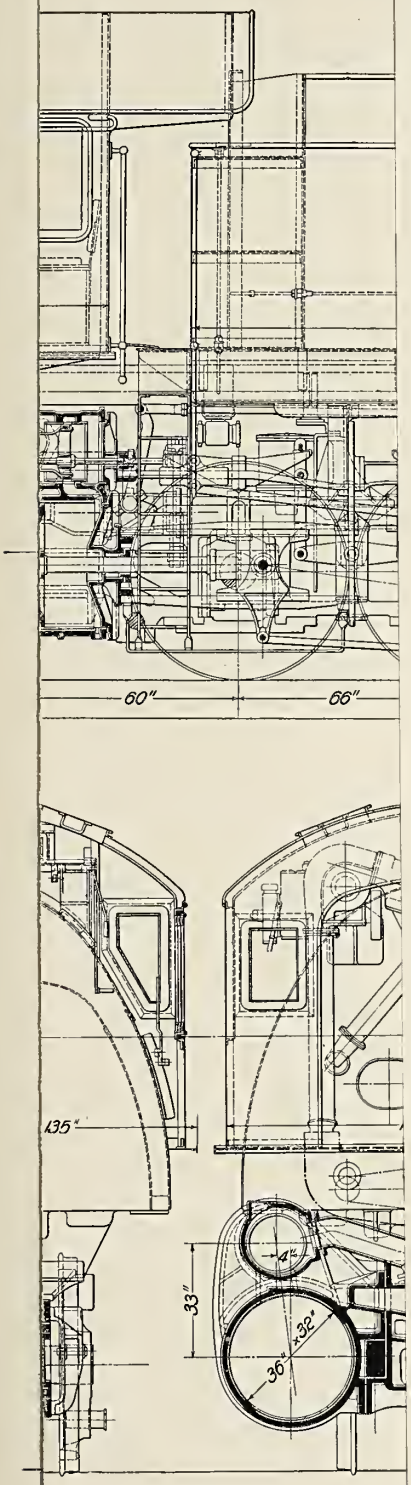

Steam Pres., 210 lbs. D
Wt. on Drivers, 761,600 lbs.

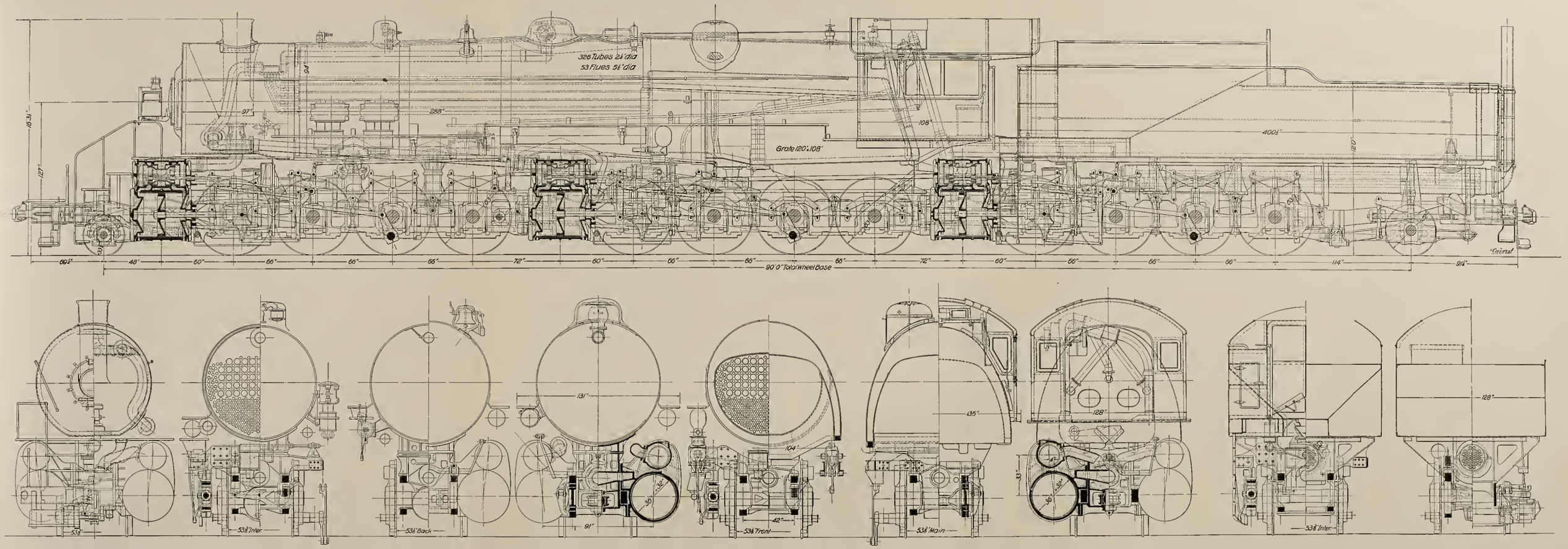

Fig. 137—Mallet Articulated-Triplex (2-8-8-8-2) Compound Locomotive for Freight Service. Built by the Baldwin Locomotive Works for the Erie. Cyls., 36 in. x 32 in. Steam Pres., 210 lbs. Diam. Drivers, 63 in. Tract. Eff., 160,000 lbs. Heat. Sur.-Tubes, 6,418 sq. ft.; Firebox, 468 sq. ft.; Total, 6,886 sq. ft. Sup. Sur., 1,584 sq. ft. Grate Area, 90 sq. ft. Wheel Base—Driving, 71 ft. 6 in.; Total, 90 ft. Wt. on Drivers, 761,600 lbs. Total Wt. of Eng., 853,050 lbs. Fuel, Soft Coal.

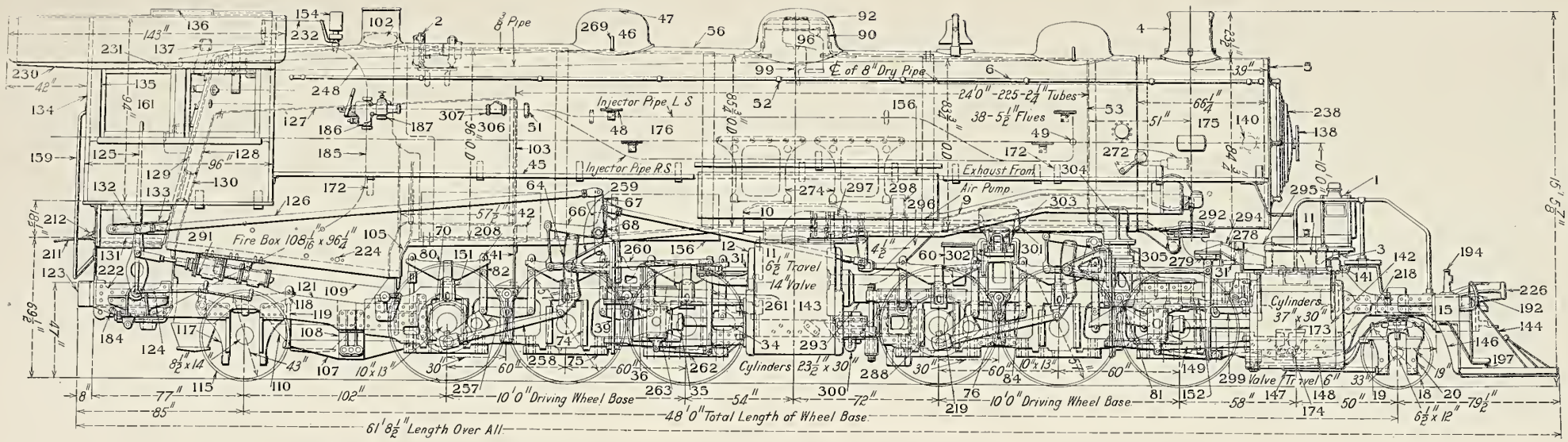

Fig. 138—Mallet Articulated (2-6-6-2) Compound Locomotive for Freight Service. Built for the Chicago, Milwaukee & Puget Sound by the American Locomotive Company.

GENERAL DATA.

Gage	4 ft. 8½ in.
Fuel	Soft Coal
Tractive Effort	75,000 lbs.
Weight in Working Order	396,000 lbs.
Weight on Drivers	327,500 lbs.
Weight on Leading Truck	21,000 lbs.
Weight on Trailing Truck	47,500 lbs.
Weight of Engine and Tender in Working Order	562,900 lbs.
Wheel Base, Driving	10 ft. and 10 ft.
Wheel Base, Total	48 ft.
Wheel Base, Engine and Tender	79 ft. 8¼ in.

RATIOS.

Weight on Drivers ÷ Tractive Effort	4.37
Total Weight ÷ Tractive Effort	5.28
Tractive Effort × Diameter Drivers ÷ Equivalent Heating Surface*	625.00
Equivalent Heating Surface* ÷ Grate Area	94.50
Firebox Heating Surface ÷ Equivalent Heating Surface,* per cent.	5.00
Weight on Drivers ÷ Equivalent Heating Surface*	47.80
Total Weight ÷ Equivalent Heating Surface*	58.00
Volume Equivalent Simple Cylinders, cu. ft.	22.85
Equivalent Heating Surface* ÷ Volume Cylinders	298.00
Grate Area ÷ Volume Cylinders	3.16

CYLINDERS.

Kind	Compound
Diameter and Stroke	23½ in. and 37 in. x 30 in.

VALVES.

Kind	Piston and Slide
Diameter	Piston, 14 in.
Greatest Travel	Piston, 6½ in.; Slide, 6 in.

WHEELS.

Driving, Diameter Over Tires	57 in.
Driving Journals, Main, Diameter and Length	10 in. x 13 in.
Driving Journals, Others, Diameter and Length	10 in. x 13 in.
Engine Truck Wheels, Diameter	33 in.
Engine Truck, Journals	6½ in. x 12 in.
Trailing Truck Wheels, Diameter	43 in.
Trailing Truck, Journals	8½ in. x 14 in.

BOILER.

Style	Conical
Working Pressure	200 lbs.
Outside Diameter of First Ring	83¾ in.
Firebox, Length and Width	108 1/16 in. x 96¼ in.
Tubes, Number and Outside Diameter	225—2¼ in.
Flues, Number and Outside Diameter	38—5½ in.
Tubes, Length	24 ft.
Heating Surface, Tubes and Flues	4,898 sq. ft.
Heating Surface, Firebox and Arch Tubes	342 sq. ft.
Heating Surface, Total	5,240 sq. ft.
Equivalent Heating Surface*	6,842 sq. ft.
Superheater Heating Surface	1,068 sq. ft.
Grate Area	72.3 sq. ft.

TENDER.

Frame	Channels
Weight	166,900 lbs.
Water Capacity	9,000 gals.
Coal Capacity	14 tons

*Equivalent Heating Surface Equals 5.240 + (1.5 × 1,068) = 6,842 sq. ft.

Numbers Refer to Names of Parts on Pages 191-192.

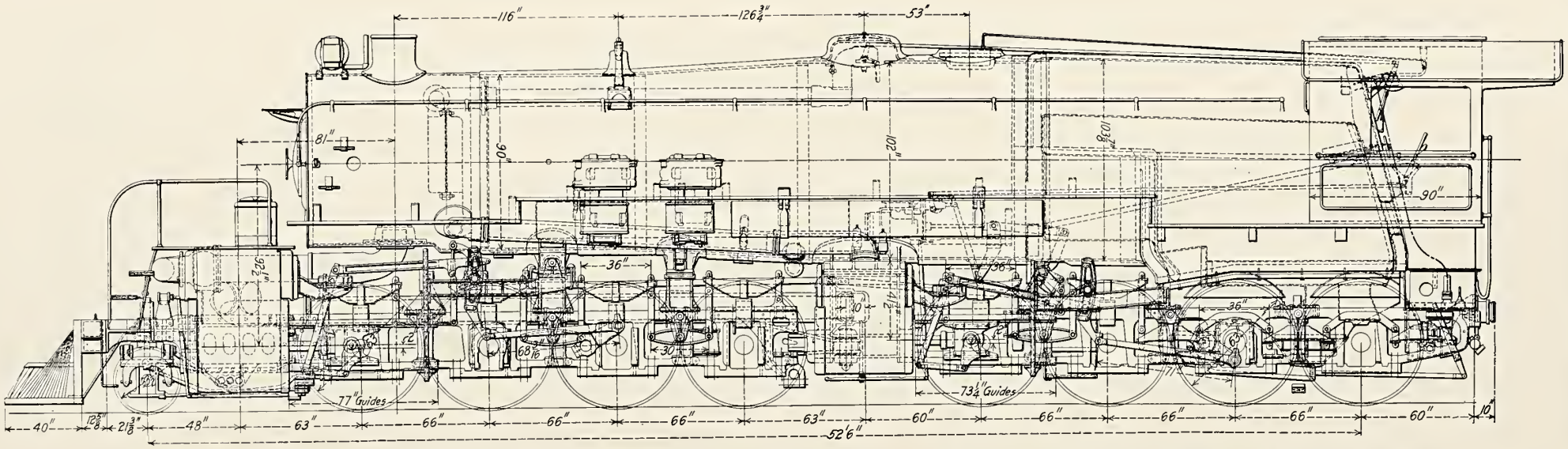

Fig. 139—Mallet Articulated (2-8-8-0) Compound Locomotive for Freight Service. Built for the Great Northern by the Baldwin Locomotive Works.

GENERAL DATA.

Gage	4 ft. 8½ in.
Service	Freight
Fuel	Soft Coal
Tractive Effort	100,000 lbs.
Weight in Working Order	450,000 lbs.
Weight on Drivers	420,000 lbs.
Weight on Leading Truck	30,000 lbs.
Weight of Engine and Tender in Working Order	600,000 lbs.
Wheel Base, Driving	16 ft. 6 in. and 16 ft. 6 in.
Wheel Base, Total	52 ft. 6 in.
Wheel Base, Engine and Tender	83 ft. 1 in.

RATIOS.

Weight on Drivers ÷ Tractive Effort	4.20
Total Weight ÷ Tractive Effort	4.50
Tractive Effort × Diameter Drivers ÷ Equivalent Heating Surface*	740.00
Equivalent Heating Surface* ÷ Grate Area	108.20
Firebox Heating Surface ÷ Equivalent Heating Surface,* per cent	3.84
Weight on Drivers ÷ Equivalent Heating Surface*	49.40
Total Weight ÷ Equivalent Heating Surface*	53.00
Volume Equivalent Simple Cylinders	32.2 cu. ft.
Equivalent Heating Surface* ÷ Volume Cylinders	263.00
Grate Area ÷ Volume Cylinders	2.43

CYLINDERS.

Kind	Compound
Diameter and Stroke	28 in. and 42 in. by 32 in.

VALVES.

Kind	Piston
Diameter	15 in.

WHEELS.

Driving, Diameter Over Tires	63 in.
Driving, Thickness of Tires	3½ in.
Driving Journal, Main, Diameter and Length	11 in. x 12 in.
Driving Journals, Others, Diameter and Length	10 in. x 12 in.
Engine Truck Wheels, Diameter	33½ in.
Engine Truck, Journals	6 in. x 12 in.

BOILER.

Style	Conical
Working Pressure	210 lbs. per sq. in.
Outside Diameter of First Ring	90 in.
Firebox, Length and Width	117¼ in. x 96¼ in.
Firebox Plates, Thickness	⅜ in. and ⅝ in.
Firebox, Water Space	6 in. and 5 in.
Tubes, Number and Outside Diameter	332—2¼ in.
Flues, Number and Outside Diameter	42—5½ in.
Tubes and Flues, Length	24 ft.
Heating Surface, Tubes and Flues	6,120 sq. ft.
Heating Surface, Firebox	326 sq. ft.
Heating Surface, Total	6,446 sq. ft.
Superheater Heating Surface	1,368 sq. ft.
Equivalent Heating Surface*	8,498 sq. ft.
Grate Area	78.4 sq. ft.

TENDER.

Frame	12 in. Channels
Weight	150,000 lb.
Wheels, Diameter	36 in.
Journals, Diameter and Length	5½ in. x 10 in.
Water Capacity	8,000 gal.
Coal Capacity	13 tons

* Equivalent Heating Surface = Total Evaporative Heating Surface + 1.5 times the Superheating Surface.

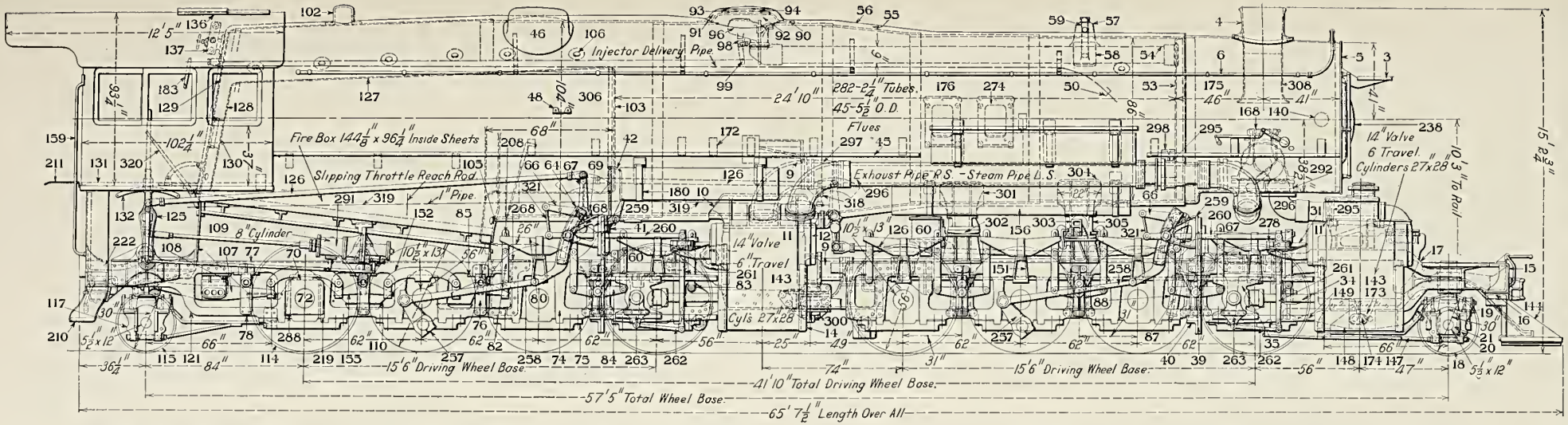

Fig. 140—Mallet Articulated (2-8-8-2) Simple Locomotive for Freight Service. Built for the Pennsylvania by the American Locomotive Company.

GENERAL DATA.

Gage	4 ft. 8½ in.
Class	HH1s
Fuel	Soft Coal
Tractive Effort	99,200 lbs.
Weight in Working Order	483,000 lbs.
Weight on Drivers	435,500 lbs.
Weight on Leading Truck	23,500 lbs.
Weight on Trailing Truck	24,000 lbs.
Weight of Engine and Tender in Working Order	669,400 lbs.
Wheel Base, Driving	15 ft. 6 in. and 15 ft. 6 in.
Wheel Base, Total	57 ft. 5 in.
Wheel Base, Engine and Tender	88 ft. 0½ in.

RATIOS.

Weight on Drivers ÷ Tractive Effort	4.39
Total Weight ÷ Tractive Effort	4.86
Tractive Effort × Diameter Drivers ÷ Equivalent Heating Surface*	790.0
Equivalent Heating Surface* ÷ Grate Area	72.70
Firebox Heating Surface ÷ Equivalent Heating Surface,* per cent.	6.04
Weight on Drivers ÷ Equivalent Heating Surface*	62.10
Total Weight ÷ Equivalent Heating Surface*	69.00
Volume All Cylinders, cu. ft.	37.88
Equivalent Heating Surface* ÷ Volume Cylinders	185.00
Grate Area ÷ Volume Cylinders	2.54

CYLINDERS.

Kind	Simple
Number	4
Diameter and Stroke	27 in. x 28 in.

VALVES.

Kind	Piston
Diameter	14 in.
Greatest Travel	6 in.
Outside Lap	1 in.
Inside Clearance	None
Lead in Full Gear	3/16 in.

WHEELS.

Driving, Diameter Over Tires	56 in.
Driving, Thickness of Tires	3 in.
Driving Journals, Main, Diameter and Length	10½ in. x 13 in.
Driving Journals, Others, Diameter and Length	10½ in. x 13 in.
Engine Truck Wheels, Diameter	30 in.
Engine Truck, Journals	5½ in. x 12 in.
Trailing Truck Wheels, Diameter	30 in.
Trailing Truck, Journals	5½ in. x 12 in.

BOILER.

Style	Conical
Working Pressure	160 lbs.
Outside Diameter of First Ring	87⅝ in.
Firebox, Length and Width	144⅛ in. x 96¼ in.
Firebox Plates, Thickness	⅜ in. and ½ in.
Firebox, Water Space	F., 5½ in.; S. and B., 5 in.
Tubes, Number and Outside Diameter	282—2¼ in.
Flues, Number and Outside Diameter	45—5½ in.
Tubes, Length	24 ft. 10 in.
Heating Surface, Tubes and Flues	5,701 sq. ft.
Heating Surface, Firebox and Arch Tubes	424 sq. ft.
Heating Surface, Total	6,125 sq. ft.
Equivalent Heating Surface*	7,020 sq. ft.
Superheater Heating Surface	1,257 sq. ft.
Grate Area	96.5 sq. ft.
Smoke Stack, Diameter	20 in.
Smoke Stack, Height Above Rail	15 ft. 2¾ in.
Center of Boiler Above Rail	10 ft. 3 in.

TENDER.

Tank	U-shape
Frame	13 in. channels
Weight	186,400 lbs.
Wheels, Diameter	33 in.
Journals, Diameter and Length	6 in. x 11 in.
Water Capacity	9,000 gals.
Coal Capacity	15 tons

*Equivalent Heating Surface Equals 6,125 + (1.5 × 1,257) = 7.020 sq. ft.

Numbers Refer to Names of Parts on Pages 191-192.

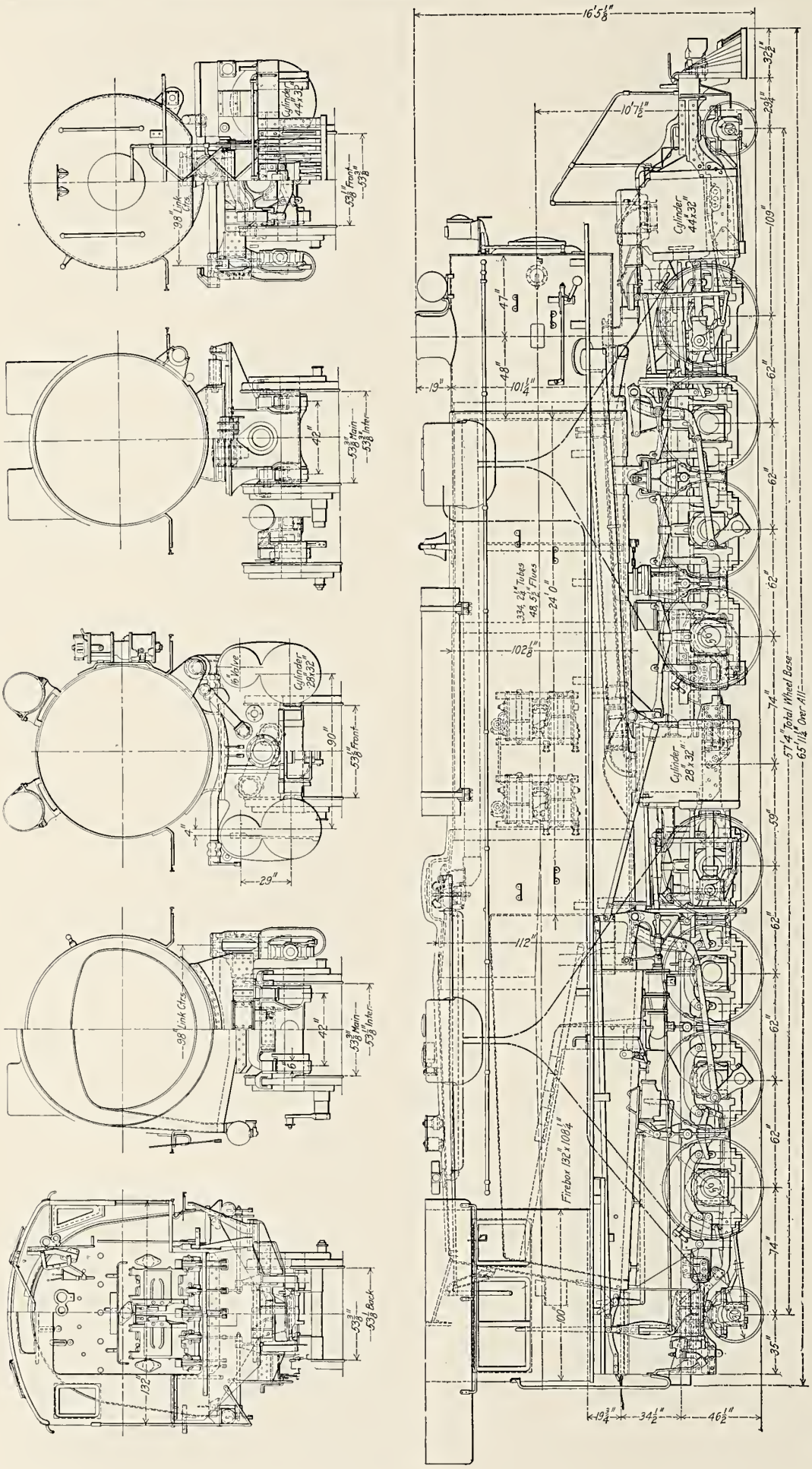

Fig. 141—Mallet Articulated (2-8-8-2) Compound Locomotive for Freight Service. Built for the Virginian by the American Locomotive Company. Cylinders, 28 in. and 44 in. x 32 in. Working Steam Pressure, 200 lbs. per sq. in. Diameter of Drivers, 56 in. Tractive Effort, 115,000 lbs. Heating Surface—Tubes, 6,350 sq. ft.; Firebox, 410 sq. ft.; Total, 6,760 sq. ft.; Superheater Surface, 1,310 sq. ft. Grate Area, 99.2 sq. ft. Rigid Wheel Base, 15 ft. 6 in. Total Engine Wheel Base, 57 ft. 4 in. Weight on Drivers, 479,200 lbs. Total Weight of Engine, 540,000 lbs. Fuel, Soft Coal.

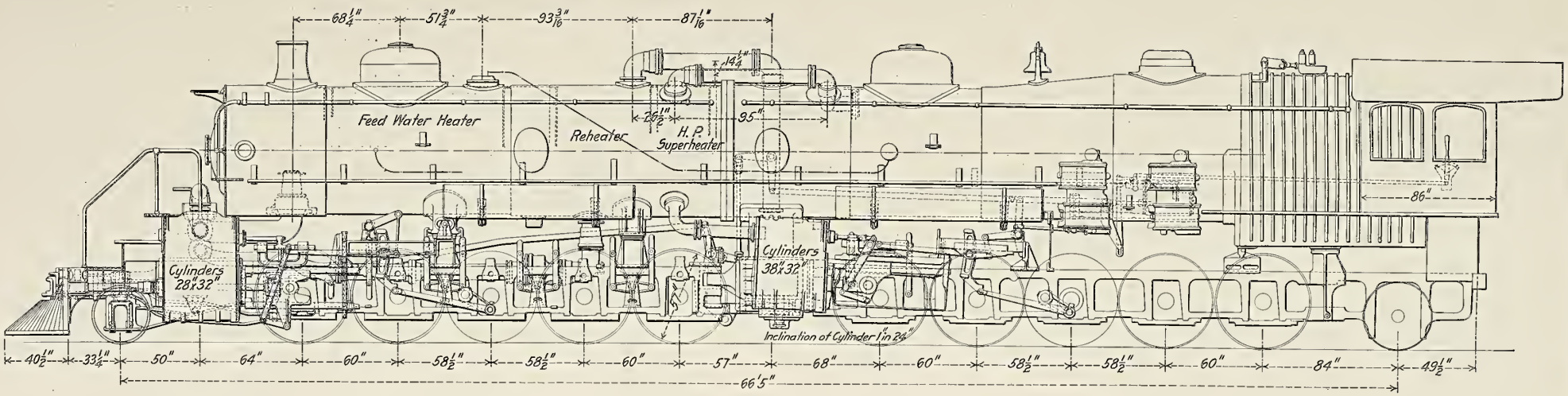

Fig. 142—Mallet Articulated (2-10-10-2) Compound Locomotive. Built by the Atchison, Topeka & Santa Fe and the Baldwin Locomotive Works.

GENERAL DATA.

Gage	4 ft. 8½ in.
Fuel	Oil
Tractive Effort	111,000 lbs.
Weight in Working Order	616.000 lbs.
Weight on Drivers	550,000 lbs.
Weight of Engine and Tender in Working Order	850 000 lbs.
Wheel Base, Driving	19 ft. 9 in. and 19 ft. 9 in.
Wheel Base, Total	66 ft. 5 in.
Wheel Base, Engine and Tender	108 ft. 1⅝ in.

RATIOS.

Weight on Drivers ÷ Tractive Effort	4.95
Total Weight ÷ Tractive Effort	5.55
Tractive Effort × Diameter Drivers ÷ Heating Surface	963.00
Tractive Effort × Diameter Drivers ÷ Equivalent Heating Surface*	710.00
Total Heating Surface ÷ Grate Area	80.40
Total Equivalent Heating Surface* ÷ Grate Area	109.00
Firebox Heating Surface ÷ Equivalent Heating Surface,* per cent.	3.30
Weight on Drivers ÷ Total Heating Surface	83.60
Weight on Drivers ÷ Equivalent Heating Surface*	61.70
Total Weight ÷ Total Heating Surface	93.70
Total Weight ÷ Equivalent Heating Surface*	69.10
Volume Both Cylinders, cu. ft.	30.10
Total Heating Surface ÷ Volume Cylinders	219.00
Equivalent Heating Surface* ÷ Volume Cylinders	296.00
Grate Area ÷ Volume Cylinders	2.72

CYLINDERS.

Kind	Compound
Diameter and Stroke	28 in. and 38 in. x 32 in.

VALVES.

Kind	Piston
Diameter	13 in. and 15 in.

WHEELS.

Driving, Diameter Over Tires	57 in.
Driving Journals, Main, Diameter and Length	11 in. x 12 in.
Driving Journals, Others, Diameter and Length	10 in. x 12 in.
Engine Truck, Journals	6½ in. x 10½ in.
Trailing Truck, Journals	7½ in. x 11⅞ in.

BOILER.

Style	Ext. Wagon Top
Working Pressure	225 lbs.
Firebox, Length and Width	149⅝ in. x 78¾ in.
Tubes, Number and Outside Diameter	377—2¼ in.
Tubes, Length	16 ft. 5 in.
Heating Surface, Tubes	3,625 sq. ft.
Heating Surface, Firebox	295 sq. ft.
Heating Surface, Feed Water Heater	2,659 sq. ft.
Heating Surface, Total	6,579 sq. ft.
Superheater Heating Surface	2,328 sq. ft.
Equivalent Heating Surface*	8,907 sq. ft.
Grate Area	81.9 sq. ft.

TENDER.

Tank	Water Bottom
Frame	12 in. and 15 in. channels
Wheels, Number	12
Wheels, Diameter	34¼ in.
Journals, Diameter and Length	5½ in. x 10 in.
Water Capacity	12,000 gals.
Oil Capacity	4,000 gals.

*Equivalent Heating Surface Equals Total Heating Surface plus Reheating and Superheater Heating Surface.

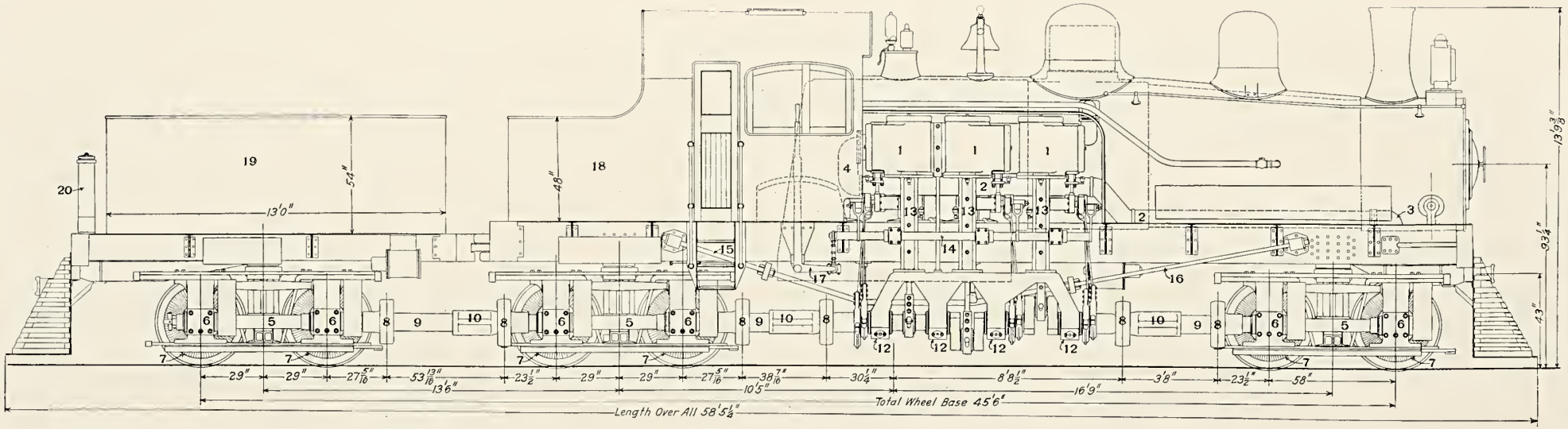

Fig. 143.—Twelve-Wheel Shay Geared Locomotive for Freight Service. Built for the Imperial Pekin Kalgan Railway by the Lima Locomotive Corporation.

Names of Parts of Shay Geared Locomotive, Fig. 143.

1 *Cylinder*
2 *Exhaust Steam Pipe*
3 *Exhaust Steam Pipe Elbow*
4 *Exhaust Steam Pipe Reducer*
5 *Line Shaft*
6 *Right Truck Box Cap*
7 *Gear*
8 *Coupling Ring*
9 *Square Shaft*
10 *Sleeve Coupling*
11 *Crank Shaft*
12 *Crank Box Cap*
13 *Cylinder Frame*
14 *Tumbling Shaft*
15 *Truss Rod End, Back*
16 *Truss Rod End, Front*
17 *Reverse Lever Shaft Arm*
18 *Coal Bunker*
19 *Water Tank*
20 *Rear Sand Box*

GENERAL DATA.

Fuel	Soft Coal
Tractive Effort	44,100 lbs.
Weight in Working Order	215,000 lbs.
Weight on Drivers	215,000 lbs.
Weight of Engine and Tender in Working Order	215,000 lbs.
Wheel Base, Driving	4 ft. 10 in.
Wheel Base, Total	45 ft. 6 in.

RATIOS.

Weight on Drivers ÷ Tractive Effort	4.87
Total Weight ÷ Tractive Effort	4.87
Tractive Effort × Diameter Drivers ÷ Heating Surface	948.00
Total Heating Surface ÷ Grate Area	48.00
Firebox Heating Surface ÷ Total Heating Surface, per cent.	7.78
Weight on Drivers ÷ Total Heating Surface	115.00
Total Weight ÷ Total Heating Surface	115.00
Volume All Cylinders, cu. ft.	5.21
Total Heating Surface ÷ Volume Cylinders	358.00
Grate Area ÷ Volume Cylinders	7.45

CYLINDERS.

Kind	Simple
Number	3
Diameter and Stroke	15 in. x 17 in.

VALVES.

Kind	Slide
Greatest Travel	4½ in.
Lead in Full Gear	1/32 in.

WHEELS.

Driving, Diameter Over Tires	40 in.
Driving Journals, Diameter and Length	6 in. x 8 in.
Number of Teeth in Gear	41
Number of Teeth in Pinion	20

BOILER.

Style	Ext. Wagon Top
Working Pressure	200 lbs.
Outside Diameter of First Ring	58½ in.
Firebox, Length and Width	96 in. x 58¼ in.
Firebox Plates, Thickness	⅜ and ½ in.
Firebox, Water Space	F., 4½; S. and B., 4 in.
Tubes, Number and Outside Diameter	246—2 in.
Tubes, Length	13 ft. 6 in.
Heating Surface, Tubes	1,720 sq. ft.
Heating Surface, Firebox	145 sq. ft.
Heating Surface, Total	1,865 sq. ft.
Grate Area	38.82 sq. ft.
Water Capacity, Tanks	4,000 gals.
Coal Capacity	6 tons

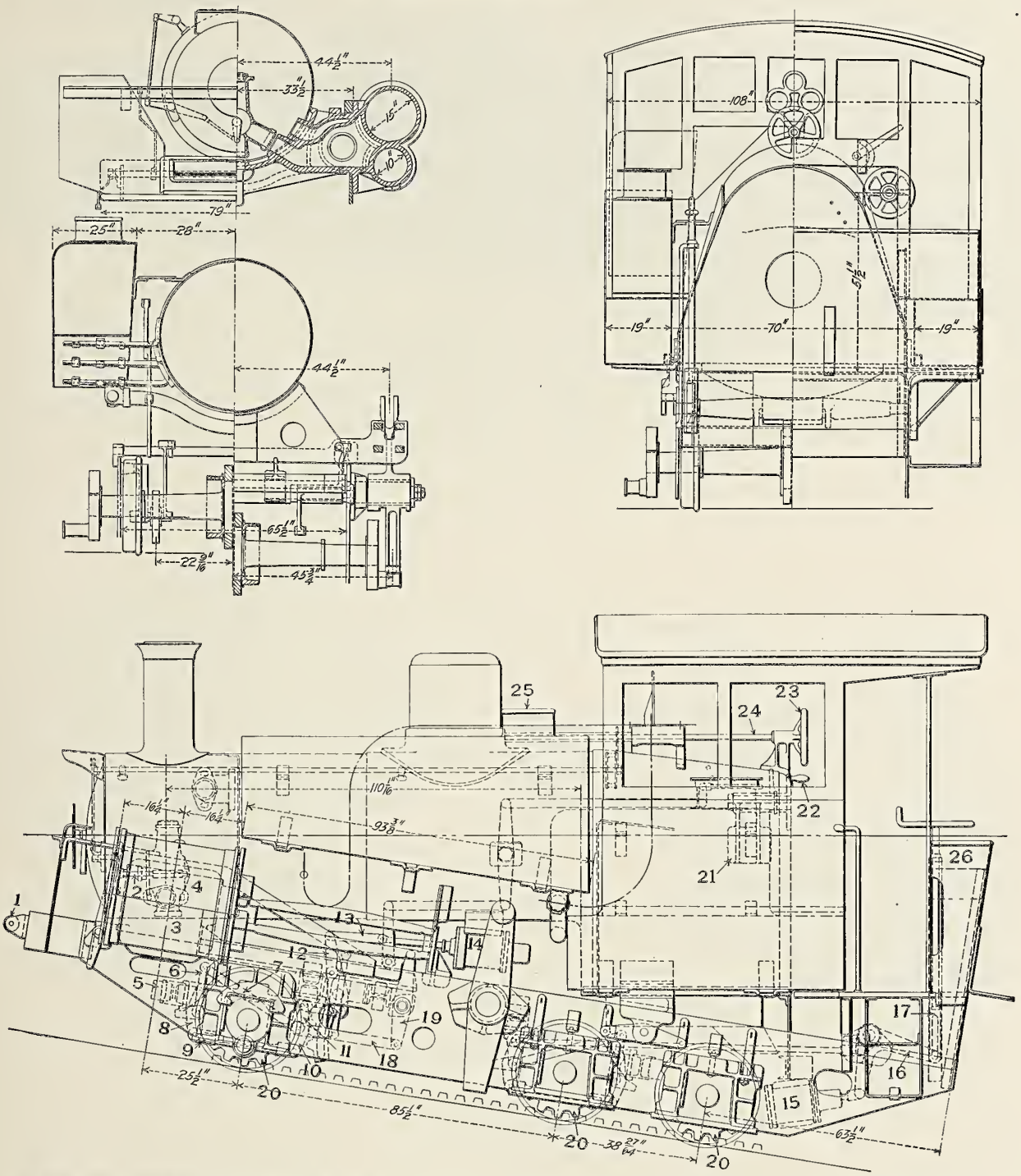

Fig. 144—Vauclain Compound Rack Locomotive for Mountain Service. Built for the Manitou & Pike's Peak by the Baldwin Locomotive Works. Cylinders, 10 in. and 15 in. x 24 in. Working Steam Pressure, 210 lbs. per sq. in. Diameter of Drivers on Pitch Line, 22 468/1000 in. Tractive Effort, 25,284 lbs. Heating Surface—Tubes, 547 sq. ft.; Firebox, 58 sq. ft.; Total, 605 sq. ft. Grate Area, 19.7 sq. ft. Rigid Wheel Base, 10 ft. 3 59/64 in. Total Weight of Engine, 60,000 lbs. Fuel, Oil.

Names of Parts of Rack Locomotive, Fig. 144

1 *Bumper Roller*
2 *Butterfly Valve*
3 *High Pressure Cylinder*
4 *Low Pressure Cylinder*
5 *Brake Crosstie, Front*
6 *Steam Brake Lever Link*
7 *Steam Brake Lever Connecting Rod*
8 *Front Steam Brake Lever*
9 *Steam Brake Jaw*
10 *Steam Brake Lever Rod*
11 *Back Steam Brake Lever*
12 *Steam Brake Shaft and Arm*
13 *Steam Brake Links*
14 *Rocking Lever*
15 *Steam Brake Cylinder, Back*
16 *Hand Brake Bell Crank*
17 *Hand Brake Shaft Jaw*
18 *Reverse Link Radius Rod*
19 *Rock Shaft*
20 *Rack Pinions*
21 *Reverse Screw Bearing*
22 *Reverse Screw Wheel*
23 *Throttle Valve Wheel*
24 *Throttle Valve Rod*
25 *Tank Funnel*
26 *Fender*

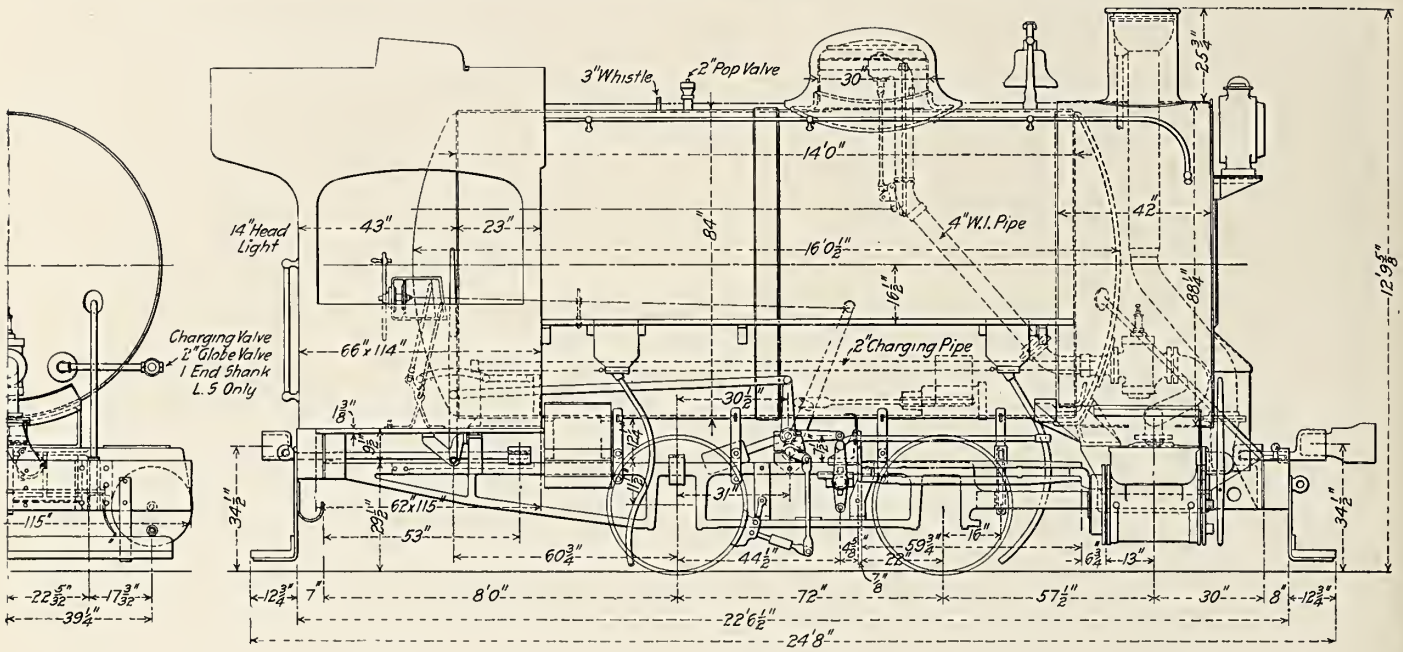

Fig. 145—Four-Wheel (0-4-0) Fireless, or Steam Storage, Locomotive for Switching Service. Built for the National Cash Register Company by the Lima Locomotive Corporation. Cylinders, 18 in. x 18 in. Steam Storage Pressure, 155 lbs. per sq. in. Working Steam Pressure, 60 lbs. per sq. in. Diameter of Drivers, 36 in. Tractive Effort, 9,720 lbs. Boiler—Diameter, 84 in.; Length, 16 ft.; Capacity, 530 cu. ft. Rigid Wheel Base, 6 ft. Weight on Drivers, 77,100 lbs. Factor of Adhesion, 7.94 to 5.60.

Names of Parts of Boilers.

1 *Foundation or Mud Ring*
2 *Blow-off Cock Hole*
3 *Back Water Space*
4 *Back Head*
5 *Back Head Brace Angle*
6 *Back or Door Sheet of Firebox*
7 *Crownsheet*
8 *Outside Firebox Sheet*
9 *Back Head Brace*
10 *Front Tube Sheet*
11 *Front Tube Sheet Brace*
12 *Radial Stay*
13 *Stiffening or Tube Sheet Ring*
14 *Sling Stay*
15 *Sling Stay Tee*
16 *Crownbar*
17 *Crownbar Bolt*
18 *Smokebox Cleaning Hole*
19 *Dome Base, Flange or Collar*
20 *Dome*
21 *Dome Shell*
22 *Dome Cap*
23 *Dome Cover*
23A *Dome Casing*
24 *Firebox*
25 *Side Water Space*
26 *Front Water Space*
27 *Waist Sheet Angle*
28 *Common Short Stay Bolt*
29 *Flexible Staybolt*
30 *Throat Sheet*
31 *Inside or Firebox Throat Sheet*
32 *Back Tube Sheet*
33 *Combustion Chamber*
34 *Throat or Belly Brace*
35 *Tube*
36 *Flue for Superheater Unit*
37 *First Course*
38 *Second Course*
39 *Conical or Gusset Course*
40 *Dome Course*
41 *Roof Sheet*
42 *Smokebox Shell*
43 *Smokebox*
44 *Smoke Stack Opening*
45 *Steam Pipe Opening*
46 *Smokebox Bottom Liner*
47 *Smokebox Front Ring*
48 *Smokebox and Shell Ring*
49 *Longitudinal Seam*
50 *Inside Welt*
51 *Outside Welt*
52 *Shell Plate*
53 *Boiler Check Valve Hole*
54 *Boiler Check Valve Hole Pad or Liner*
55 *Dome Liner*
56 *Fire Door Hole*
57 *Fire Door Hole Ring*
58 *Arch or Water Tube*
59 *Arch Tube Plug*
60 *Brick Arch*
61 *Wash Out Plug Hole*
62 *Cinder Valve Hole*
63 *Grate Bar Thimble*
64 *Dash Plate*
65 *Dry Pipe Hanger*
66 *Grate Water Tubes*
67 *Wash Out Plug Hole Flange*
68 *Firebox Side Sheet*
69 *Combustion Chamber Course*
70 *Safety Valve Dome or Turret*
71 *Safety Valve Turret Swash Plate*
72 *Injector Delivery Pipe Hanger*
73 *Combustion Chamber Brace*
74 *Belly Wash Out Hole*
75 *Belly Wash Out Hole Flange*
76 *Boiler Brace Foot*
77 *Smoke Box Joint Ring*
78 *Waist Sheet Angle Liner*
79 *Water Gauge Cock Hole*
80 *Whistle Flange*
81 *Gusset Stay*
82 *Crow Foot*
83 *Boiler Cross Brace*

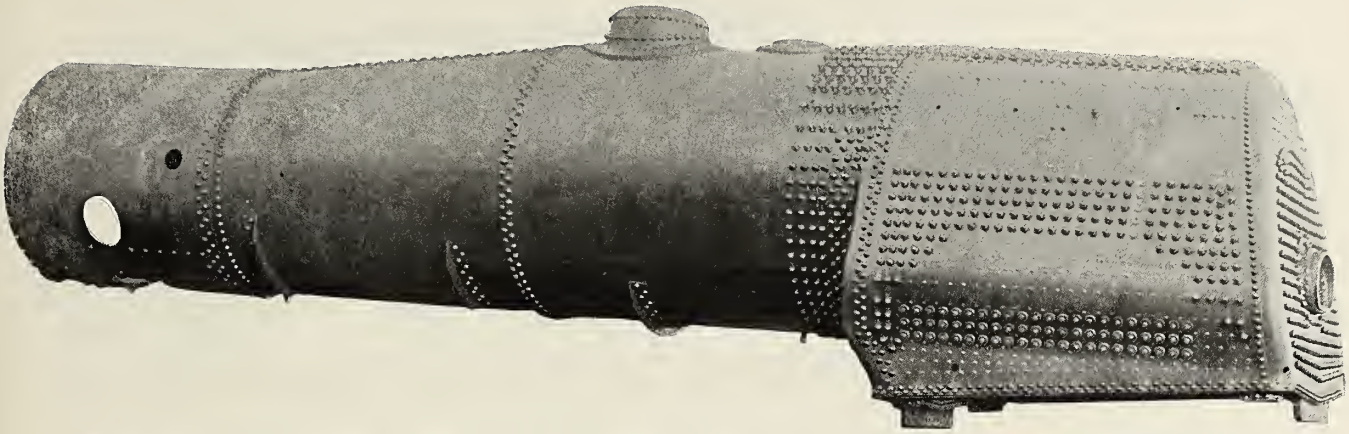

Fig. 146—Extended Wagon Top Boiler with Riegel Firebox for Pacific Type Locomotive. Built for the Delaware, Lackawanna & Western by the Lima Locomotive Corporation.

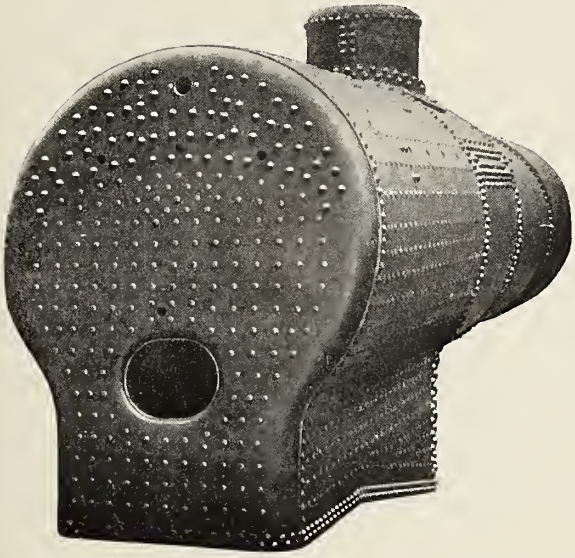

Fig. 147—Rear End View of Extended Wagon Top Boiler with Narrow Firebox.

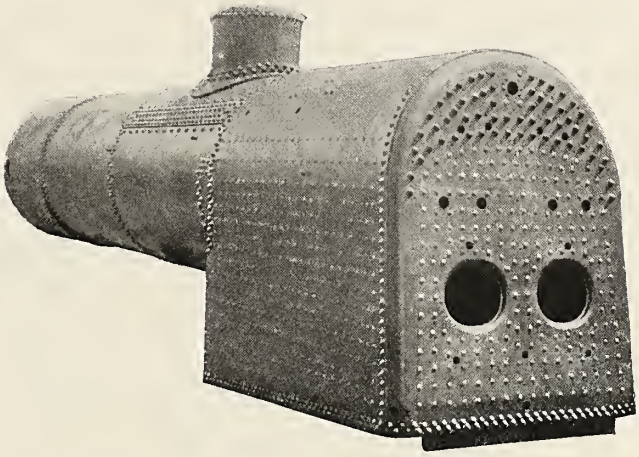

Fig. 148—Rear End View of Extended Wagon Top Boiler with Wide Firebox.

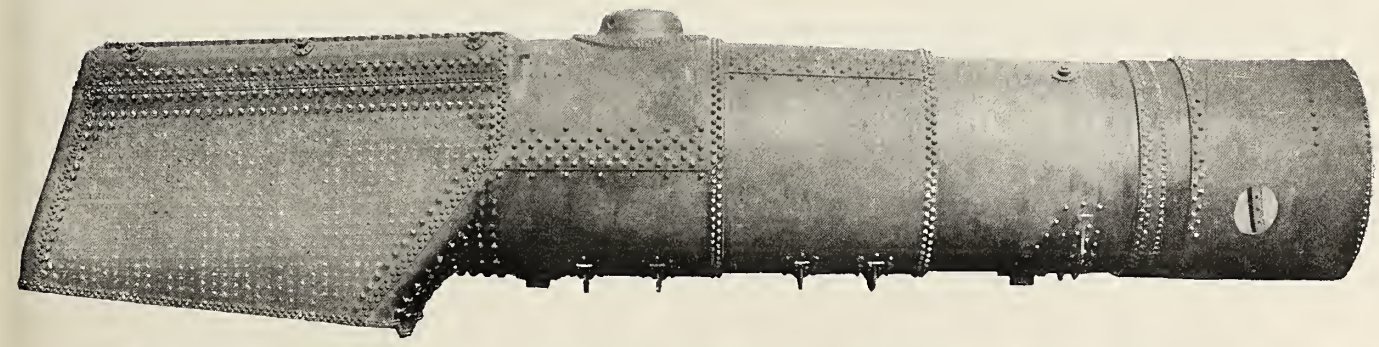

Fig. 149—Extended Wagon Top Boiler with Belpaire Firebox for Mikado and Pacific Type Locomotives. Built by the Pennsylvania Railroad.

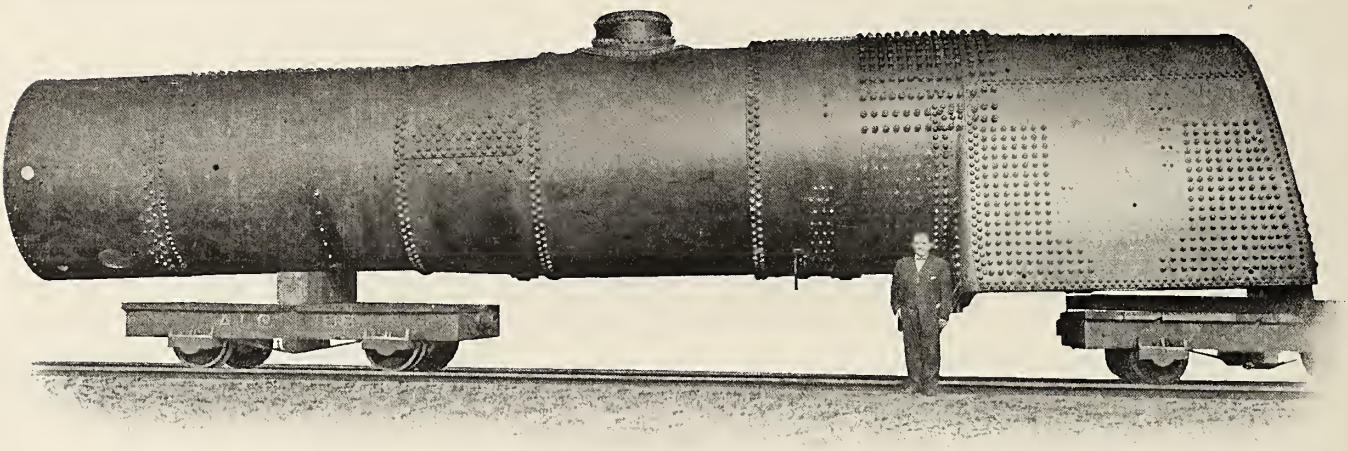

Fig. 150—Conical Type Boiler with Wide Firebox for Mallet Articulated (0-8-8-0) Compound Locomotive. Built for the Delaware & Hudson by the American Locomotive Company.

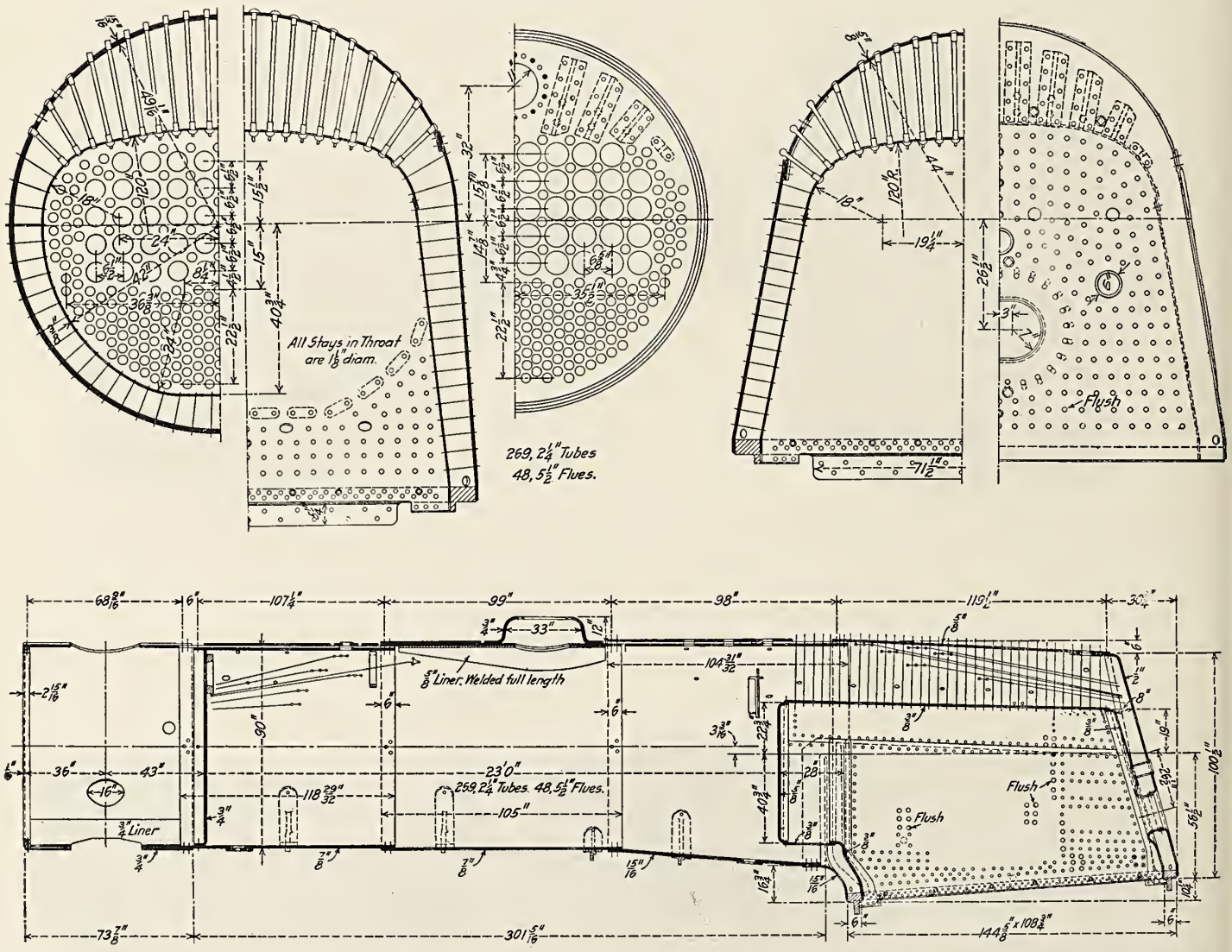

Fig. 151—Straight Top Boiler with Wide Firebox and Combustion Chamber for Santa Fe Type (2-10-2) Locomotive Built for the Baltimore & Ohio by the Baldwin Locomotive Works. Cylinders, 30 in. x 32 in. Steam Pressure, 200 lbs. Heating Surface—Tubes, 5,215 sq. ft.; Water Tubes, 35 sq. ft.; Firebox, 258 sq. ft.; Combustion Chamber, 65 sq. ft.; Total, 5,573 sq. ft.; Superheater Surface, 1,329 sq. ft. Grate Area, 88 sq. ft. Fuel, Soft Coal.

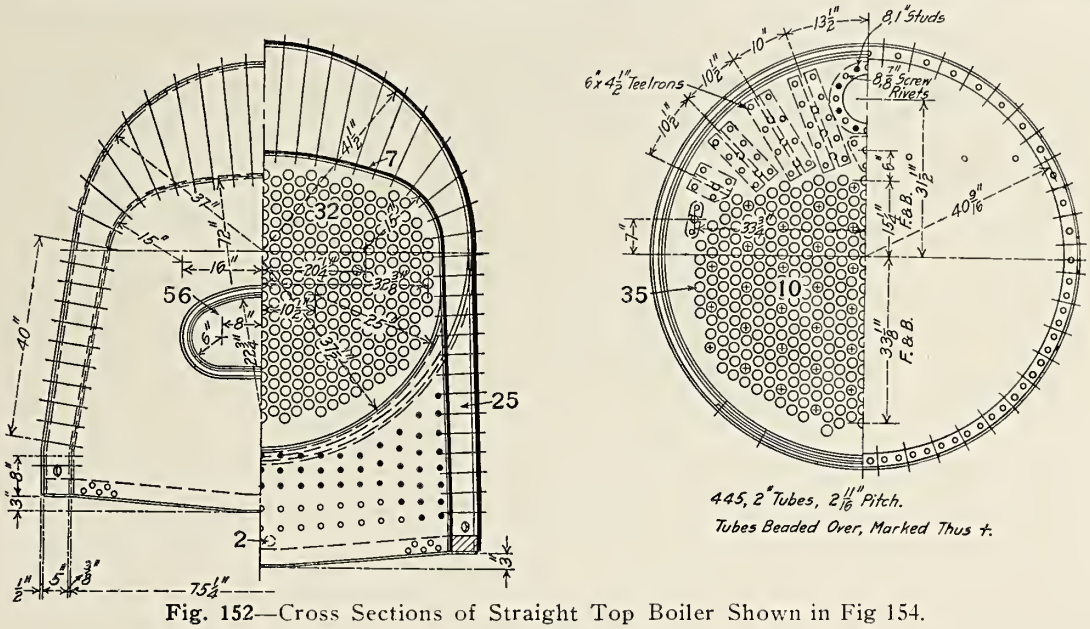

Fig. 152—Cross Sections of Straight Top Boiler Shown in Fig 154.

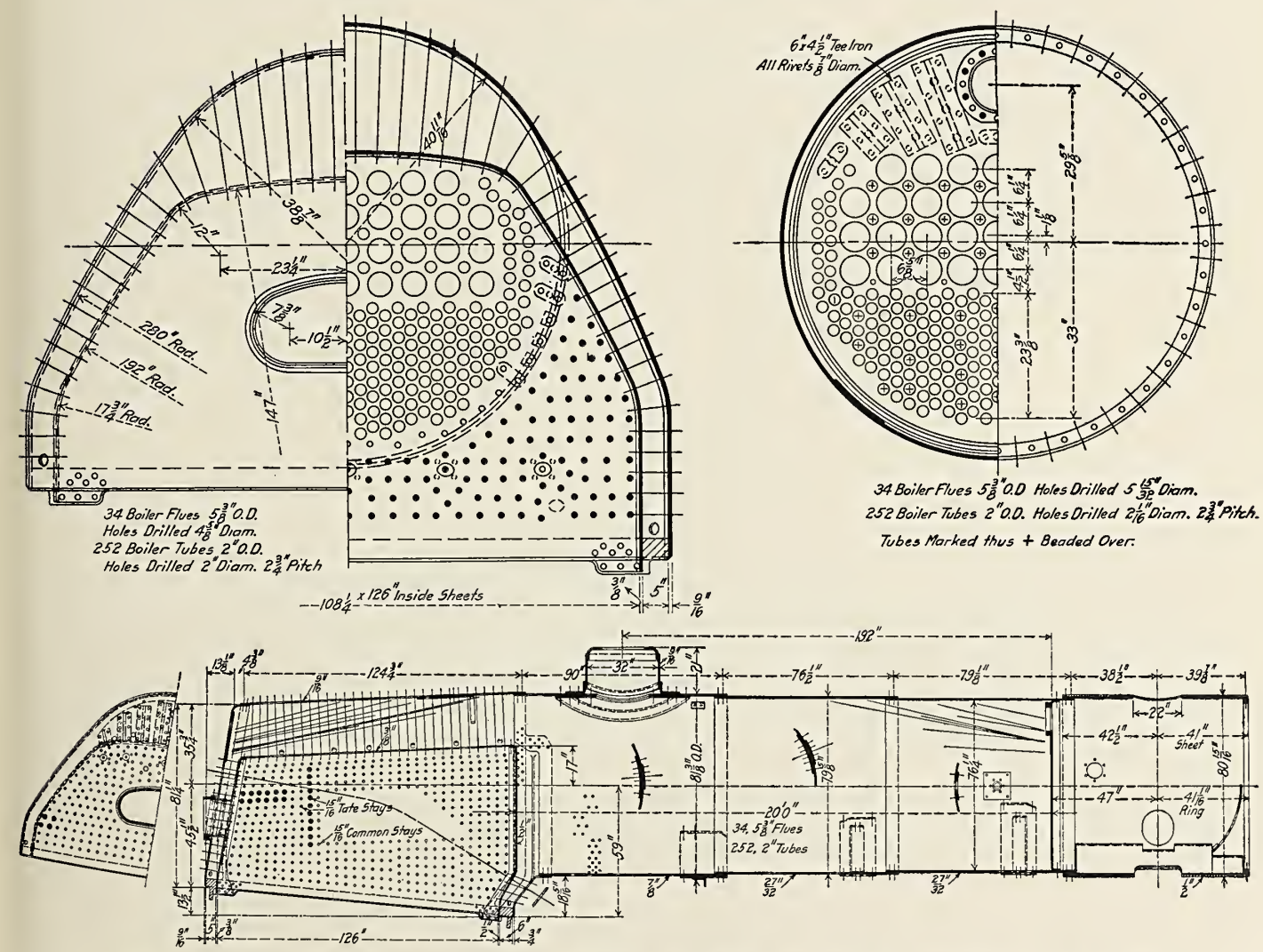

Fig. 153—Straight Top Boiler with Wootten Firebox for Pacific Type (4-6-2) Locomotive. Built for the Lackawanna by the American Locomotive Company. Cylinders, 25 in. x 28 in. Working Steam Pressure, 200 lbs. per sq. in. Heating Surface—Tubes, 3,568 sq. ft.; Firebox, 220 sq. ft.; Total, 3,788 sq. ft.; Superheater Surface, 810 sq. ft. Grate Area, 94.5 sq. ft. Fuel, Anthracite Coal.

Numbers Refer to Names of Parts on Page 236.

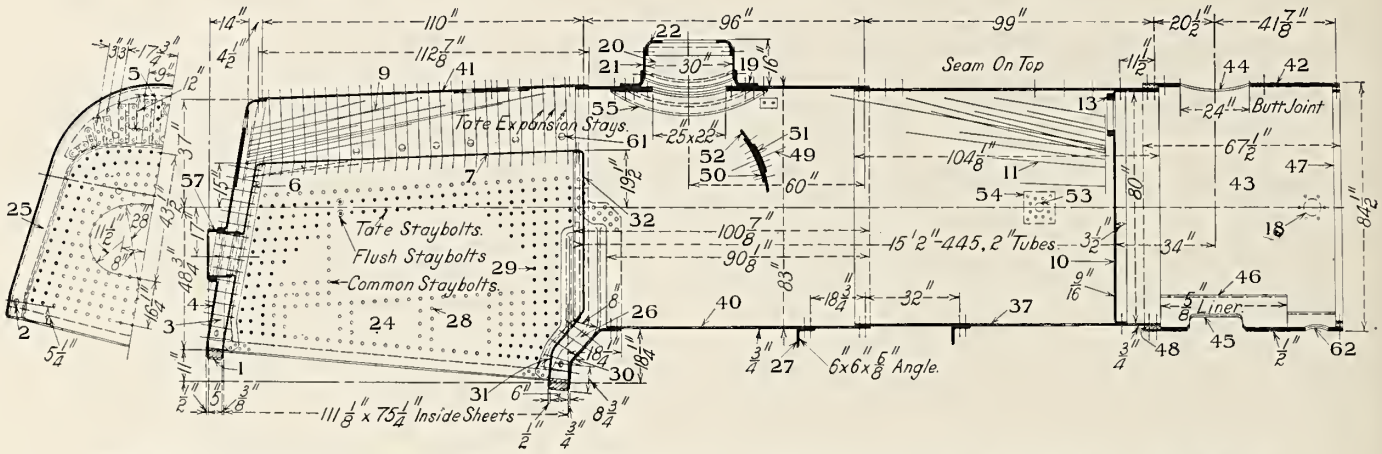

Fig. 154—Straight Top Boiler with Wide Firebox for Consolidation (2-8-0) Locomotive. Built for the Lackawanna by the American Locomotive Company. Cylinders, 26 in. x 30 in. Working Steam Pressure, 170 lbs. per sq. in. Heating Surface—Tubes, 3,513 sq. ft.; Firebox, 202 sq. ft.; Total, 3,715 sq. ft. Grate Area, 58.2 sq. ft. Fuel, Soft Coal.

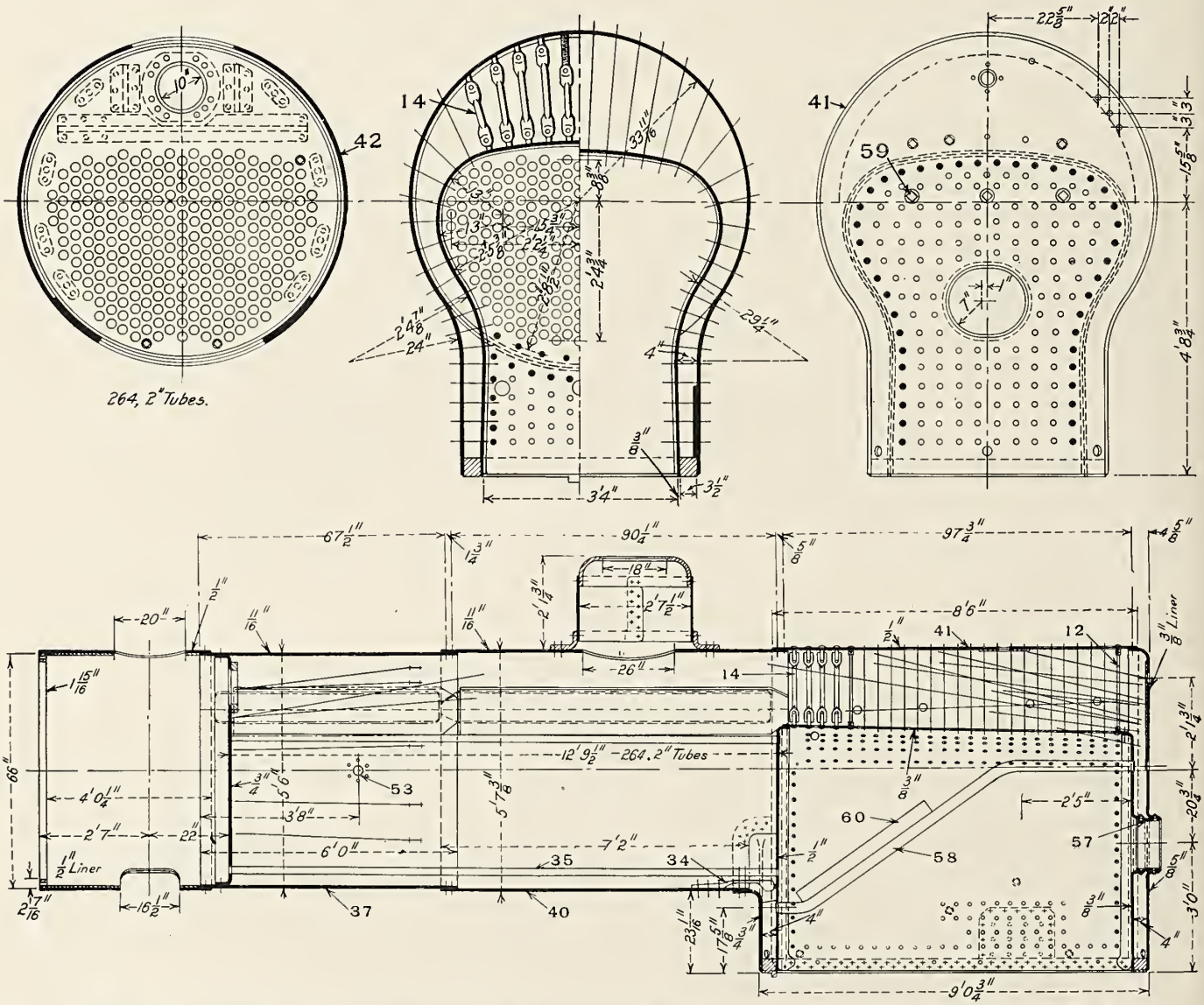

Fig. 155—Straight Top Boiler with Narrow Firebox for Six-Wheel (0-6-0) Switching Locomotive. Built for the Grand Trunk by the Lima Locomotive Corporation. Cylinders, 20 in. x 26 in. Working Steam Pressure, 190 lbs. per sq. in. Heating Surface—Tubes, 1,772 sq. ft.; Water Tubes, 21.5 sq. ft.; Firebox, 148 sq. ft.; Total, 1,941.5 sq. ft. Grate Area, 27.3 sq. ft. Fuel, Soft Coal.

Numbers Refer to Names of Parts on Page 236.

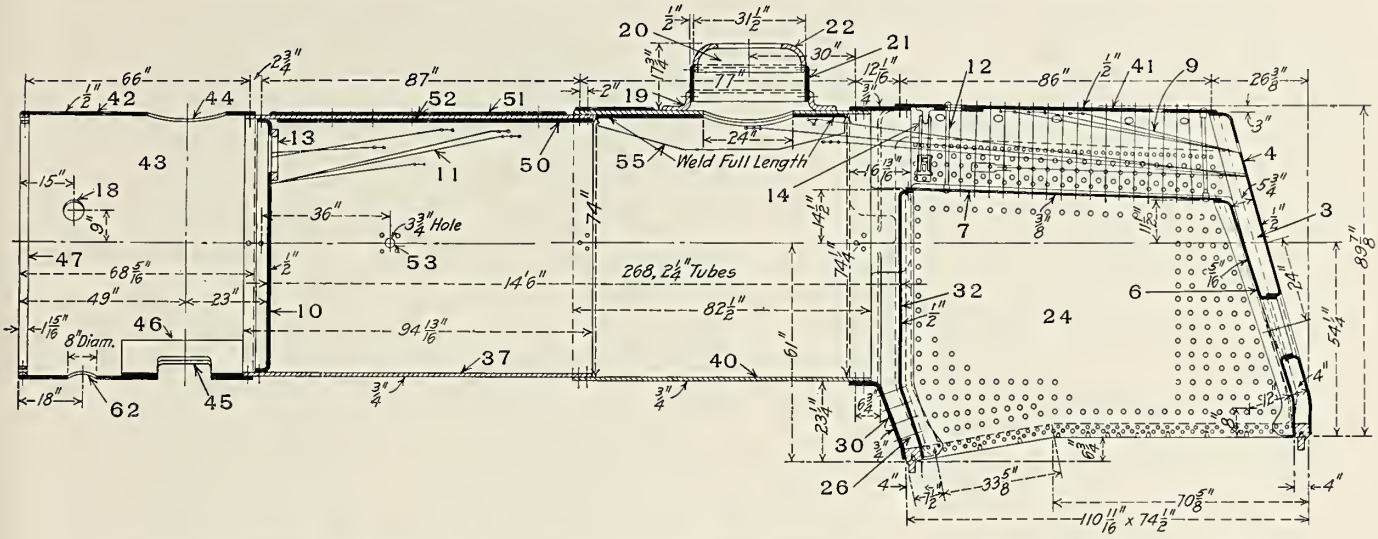

Fig. 156—Straight Top Boiler with Belpaire Firebox for Consolidation (2-8-0) Locomotive. Built for the Toledo, Peoria & Western by the Baldwin Locomotive Works. Cylinders, 21 in. x 28 in. Working Steam Pressure, 200 lbs. per sq. in. Heating Surface—Tubes, 2,276 sq. ft.; Firebox, 173 sq. ft.; Total, 2,449 sq. ft. Grate Area, 46.6 sq. ft. Fuel, Soft Coal.

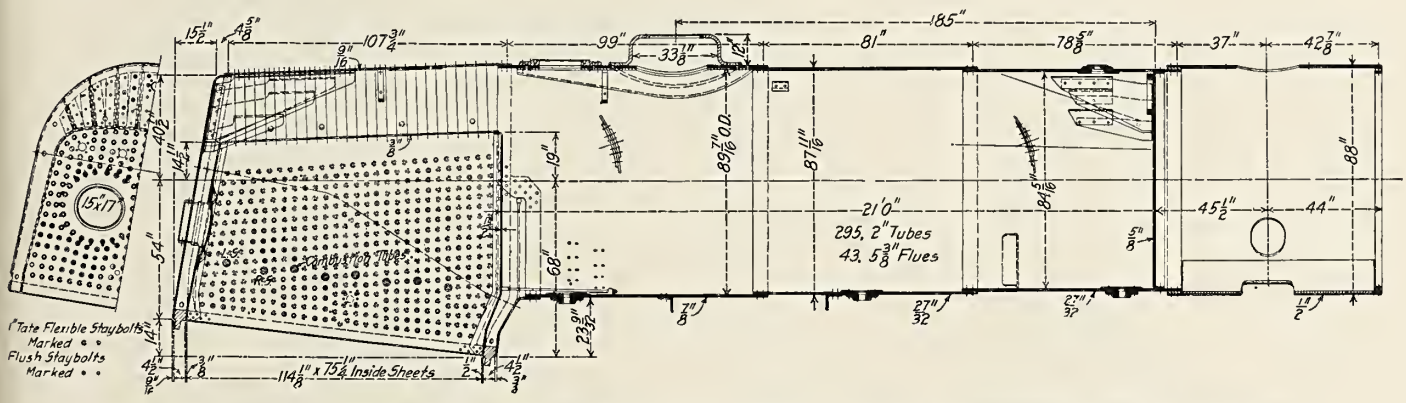

Fig. 157—Straight Top Boiler with Wide Firebox for Mikado (2-8-2) Locomotive Built for the Lake Shore & Michigan Southern by the American Locomotive Company. Cylinders, 27 in. x 30 in. Steam Pressure, 190 lbs. Heating Surface—Tubes, 4,494 sq. ft.; Firebox, 246 sq. ft.; Total, 4,730 sq. ft.; Superheater Surface, 1,065 sq. ft. Grate Area, 59.6 sq. ft. Fuel, Soft Coal.

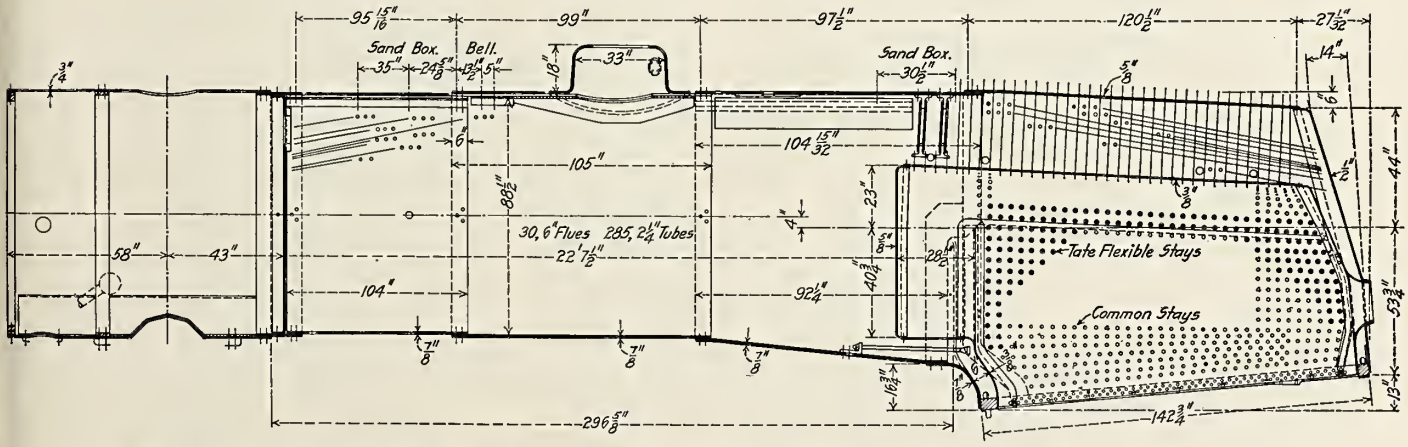

Fig. 158—Straight Top Boiler with Wide Firebox and Combustion Chamber for Santa Fe Type (2-10-2) Locomotive. Built for the Chicago, Burlington & Quincy by the Baldwin Locomotive Works. Cylinders, 30 in. x 32 in. Working Steam Pressure, 175 lbs. per sq. in. Heating Surface—Tubes, 4,841 sq. ft.; Firebox, 320 sq. ft.; Total, 5,161 sq. ft. Superheater Surface, 970 sq. ft. Grate Area, 188 sq. ft. Fuel, Soft Coal.

Numbers Refer to Names of Parts on Page 236.

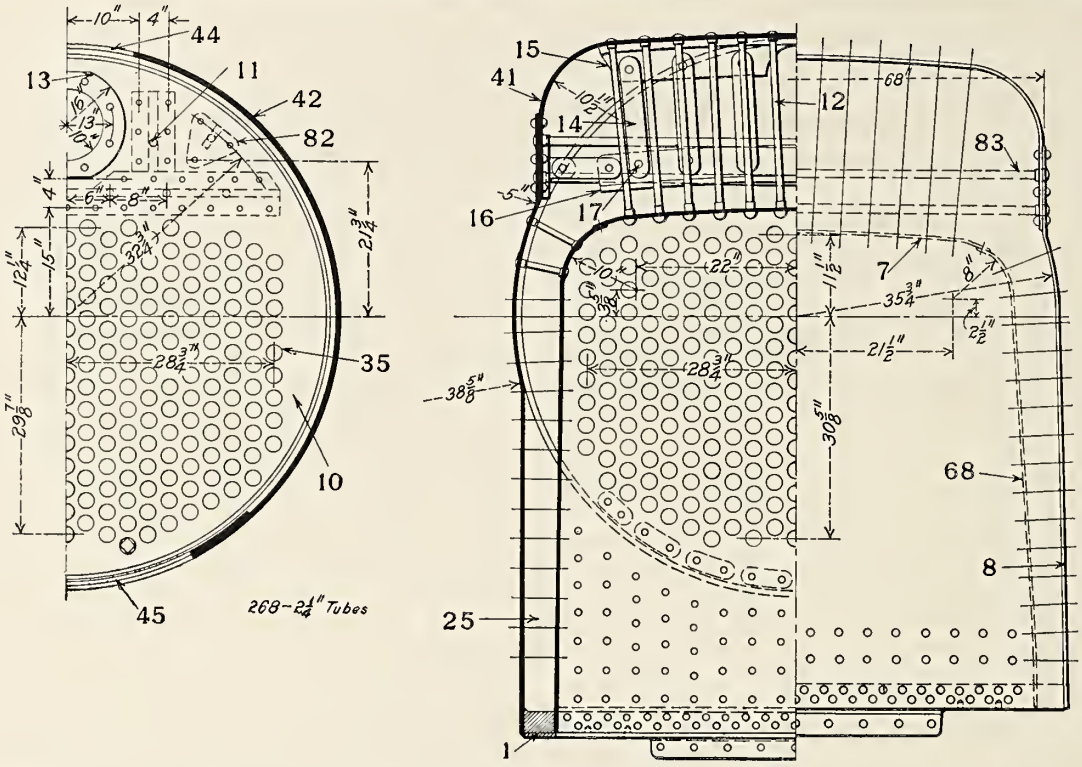

Fig. 159—Cross Sections of Straight Top Boiler with Belpaire Firebox Shown in Fig. 156.

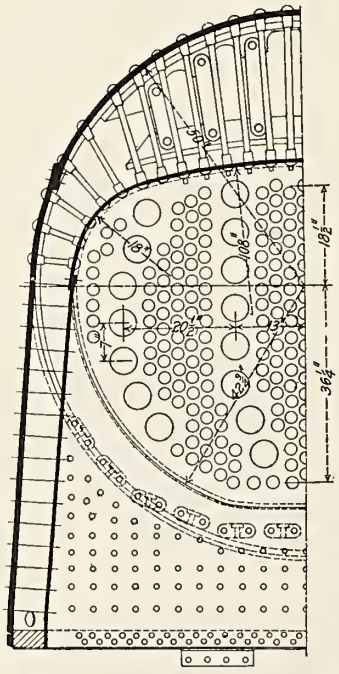

Fig. 160—Section Through Firebox of Straight Top Boiler Shown in Fig. 158, Showing Arrangement of Flues for Emerson Superheater Units.

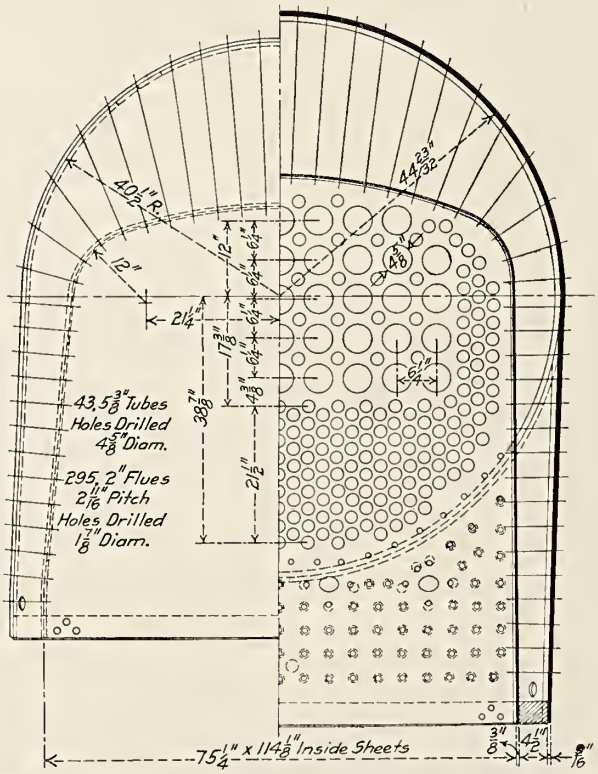

Fig. 161—Cross Sections of Straight Top Boiler Shown in Fig. 157.

Numbers Refer to Names of Parts on Page 236.

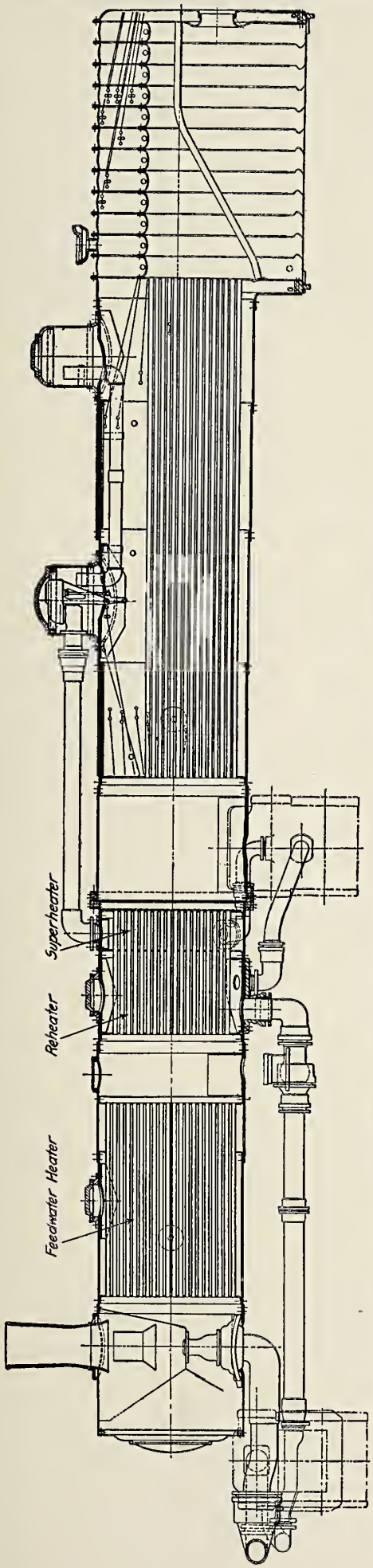

Fig. 162—Straight Top Boiler with Jacobs-Shupert Firebox and Separable Joint for Mallet Articulated (2-6-6-2) Compound Locomotive. Built by the Atchison, Topeka and Santa Fe. Cylinders, 24 in. and 38 in. x 28 in. Working Steam Pressure, 220 lbs. per sq. in. Heating Surface—Tubes, 3,376 sq. ft.; Firebox, 284 sq. ft.; Feed Water Heater, 1,893 sq. ft.; Total, 5,503 sq. ft.; Superheater Surface, 300 sq. ft.; Reheater Surface, 650 sq. ft. Grate Area, 52.5 sq. ft. Fuel, Soft Coal.

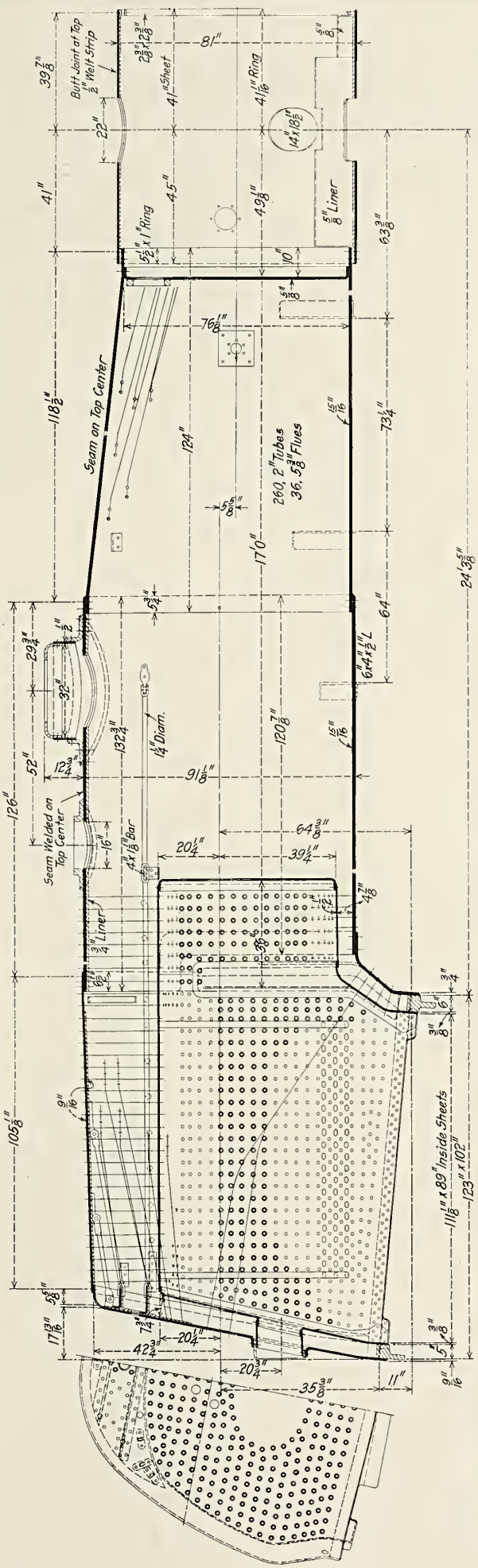

Fig. 163—Extended Wagon Top Boiler with Riegel Firebox and Combustion Chamber for Pacific Type (4-6-2) Locomotive Built by the Lima Locomotive Corporation for the Delaware, Lackawanna & Western. Cylinders, 25 in. x 28 in. Steam Pressure, 200 lbs. Heating Surface—Firebox and Combustion Chamber, 288 sq. ft.; Water Tubes, 471 sq. ft.; Arch Tubes, 24 sq. ft.; Total Firebox, 783 sq. ft.; Tubes, 3,177 sq. ft.; Total, 3,960 sq. ft.; Superheater Surface, 740 sq. ft. Grate Area, 69 sq. ft. Fuel, Anthracite Coal.

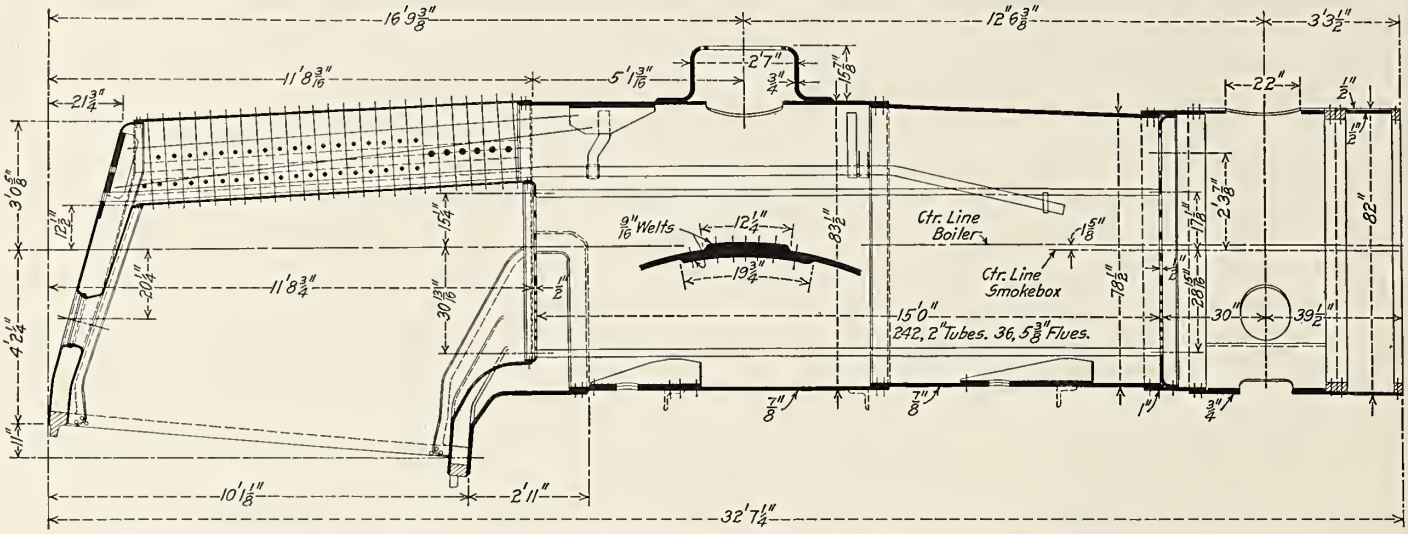

Fig. 164—Extended Wagon Top Boiler with Belpaire Firebox and Combustion Chamber for Atlantic Type (4-4-2) Locomotive built by the Pennsylvania Railroad. Cylinders, 23½ ins. x 26 in. Steam Pressure, 205 lbs. Heating Surface—Tubes, 2,660 sq. ft.; Firebox, 195 sq. ft.; Total, 2,855 sq. ft.; Superheater Surface, 721 sq. ft. Grate Area, 55.1 sq. ft. Fuel, Soft Coal.

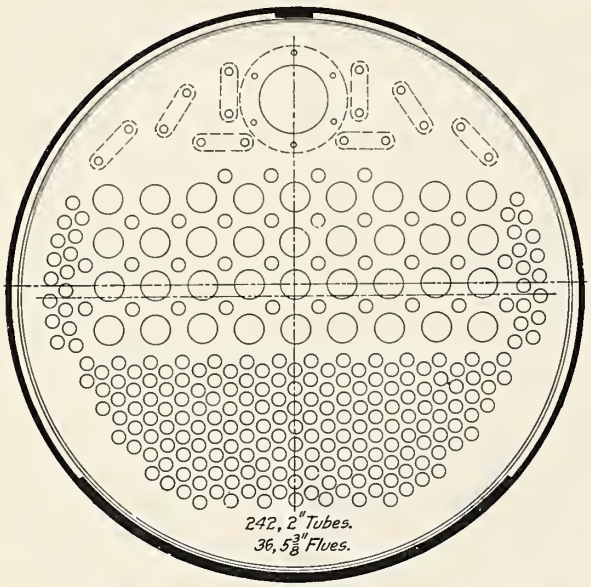

Fig. 165—Cross Sections of Boiler Shown in Fig. 164.

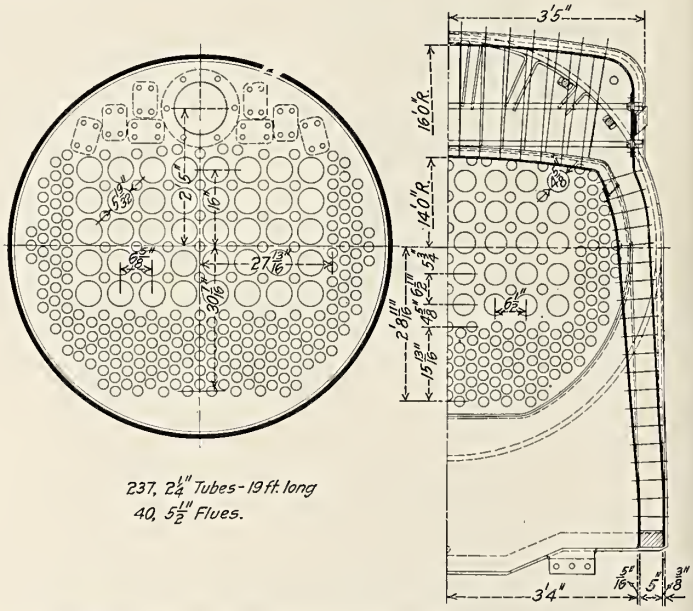

Fig. 166—Cross Sections of Boiler Shown in Fig. 167

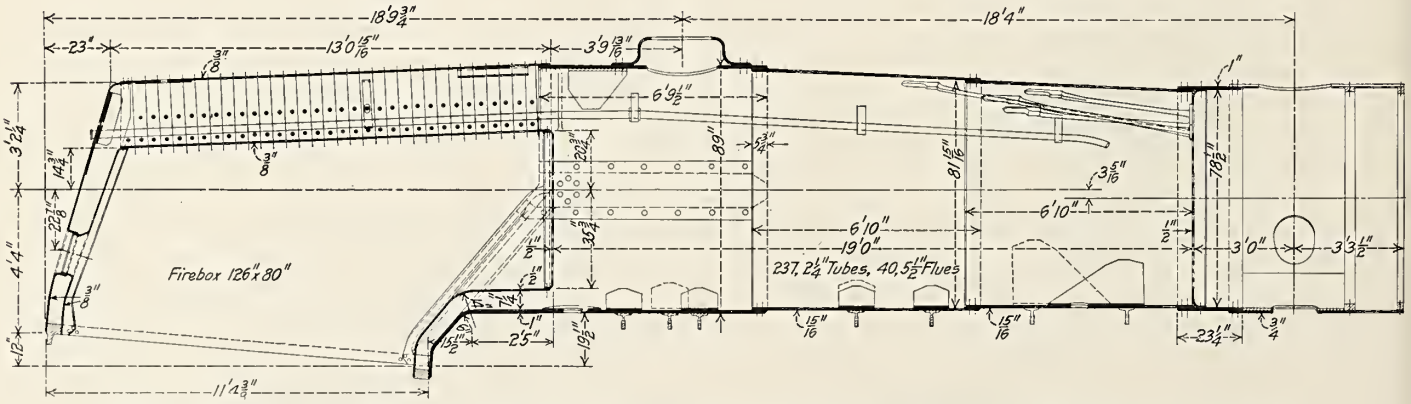

Fig. 167—Extended Wagon Top Boiler with Belpaire Firebox and Combustion Chamber for 2-8-2 and 4-6-2 Type Locomotives built by the Pennsylvania Railroad. Steam Pressure, 205 lbs. Heating Surface—Tubes, 3,746 sq. ft.; Firebox, 288 sq. ft.; Total, 4,034 sq. ft.; Superheater Surface, 1,154 sq. ft. Grate Area, 70 sq. ft. Fuel, Soft Coal.

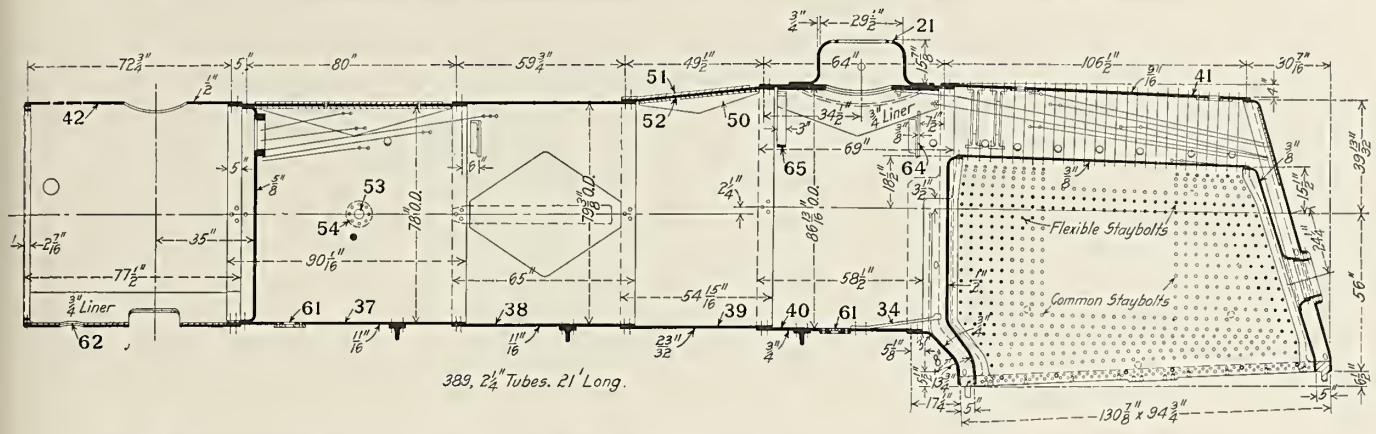

Fig. 168—Extended Wagon Top Boiler with Wide Firebox for Mikado (2-8-2) Locomotive. Built for the Baltimore & Ohio by the Baldwin Locomotive Works. Cylinders, 24 in. x 32 in. Working Steam Pressure, 205 lbs. per sq. in. Heating Surface—Tubes, 4,789 sq. ft.; Firebox, 228 sq. ft.; Total, 5,017 sq. ft. Grate Area, 70 sq. ft. Fuel, Soft Coal.

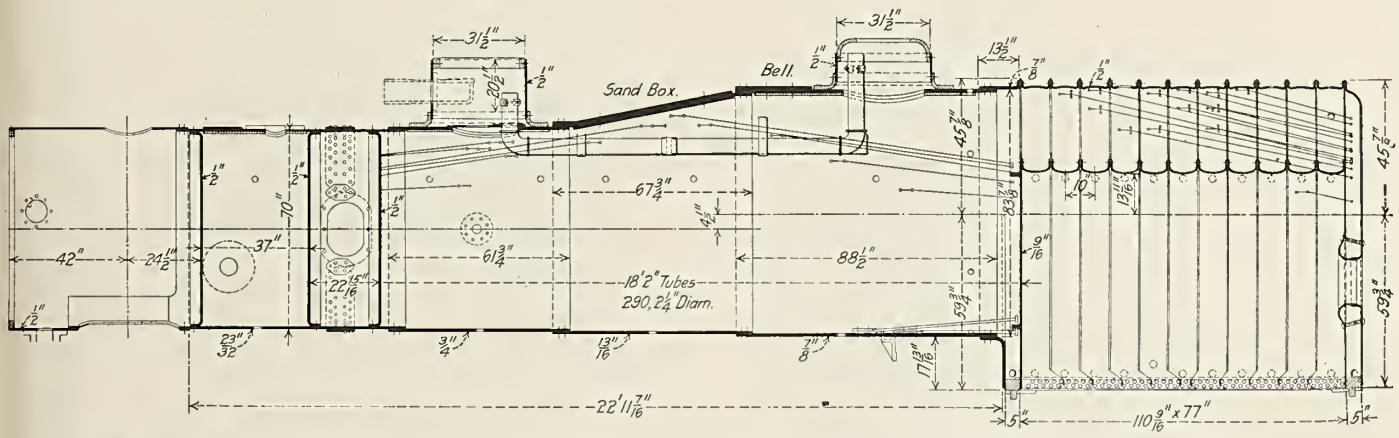

Fig. 169—Extended Wagon Top Boiler with Jacobs-Shupert Firebox and Auxiliary Throttle Valve Dome for Pacific Type (4-6-2) Balanced Compound Locomotive. Built for the Atchison, Topeka & Santa Fe by the Baldwin Locomotive Works. Cylinders, 17½ in. and 29 in. x 28 in. Working Steam Pressure, 210 lbs. per sq. in. Heating Surface—Tubes, 3,088 sq. ft.; Firebox, 237 sq. ft.; Total, 3,325 sq. ft. Superheater Surface, 806 sq. ft. Grate Area, 57.6 sq. ft. Fuel, Soft Coal.

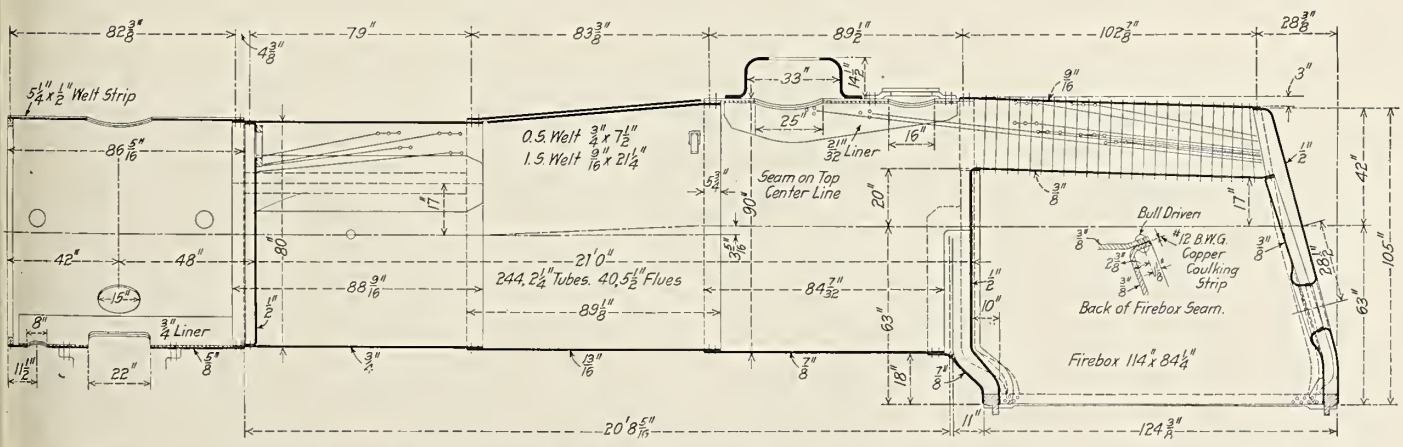

Fig. 170—Extended Wagon Top Boiler with Wide Firebox for Pacific Type (4-6-2) Locomotive. Built for the Atchison, Topeka & Santa Fe by the Baldwin Locomotive Works. Cylinders, 26 in. x 26 in. Steam Pressure, 200 lbs. Heating Surface—Tubes and Flues, 4,211 sq. ft.; Firebox, 232 sq. ft.; Total, 4,443 sq. ft.; Superheater Surface, 980 sq. ft. Grate Area, 66.7 sq. ft. Fuel, Oil.

Numbers Refer to Names of Parts on Page 236.

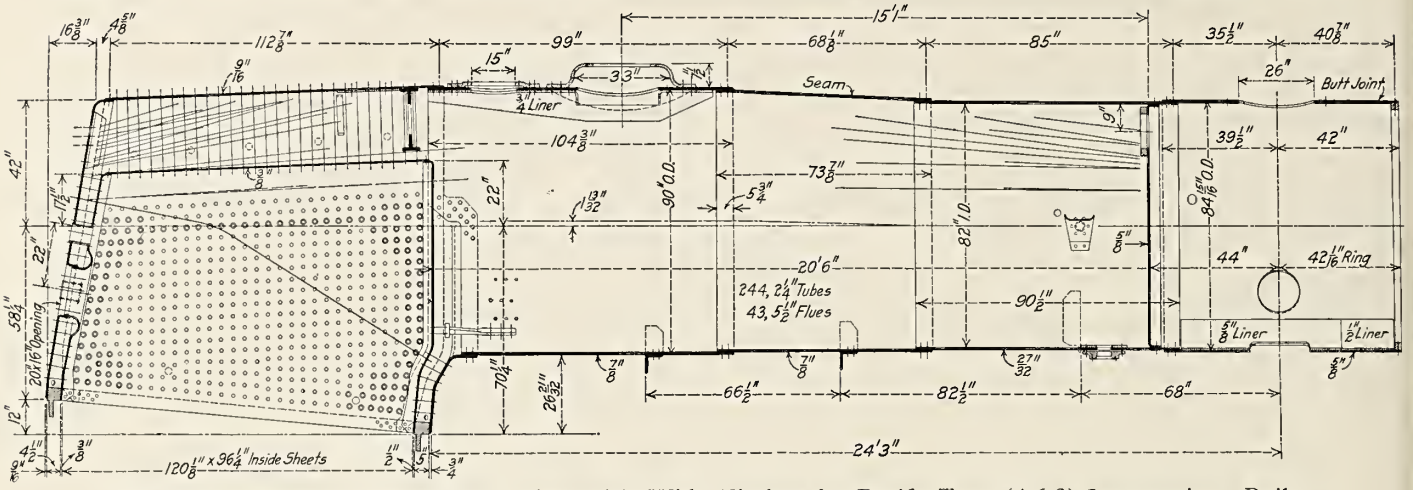

Fig. 171—Extended Wagon Top Boiler with Wide Firebox for Pacific Type (4-6-2) Locomotive. Built for the Chesapeake & Ohio by the American Locomotive Company. Cylinders 27 in. x 28 in. Steam Pressure, 185 lbs. Heating Surface—Tubes and Flues, 4,196 sq. ft.; Firebox, 255.4 sq. ft.; Arch Tubes, 27.4 sq. ft.; Total, 4,478.8 sq. ft.; Superheater Surface, 991 sq. ft. Grate Area, 80.3 sq. ft. Fuel, Soft Coal.

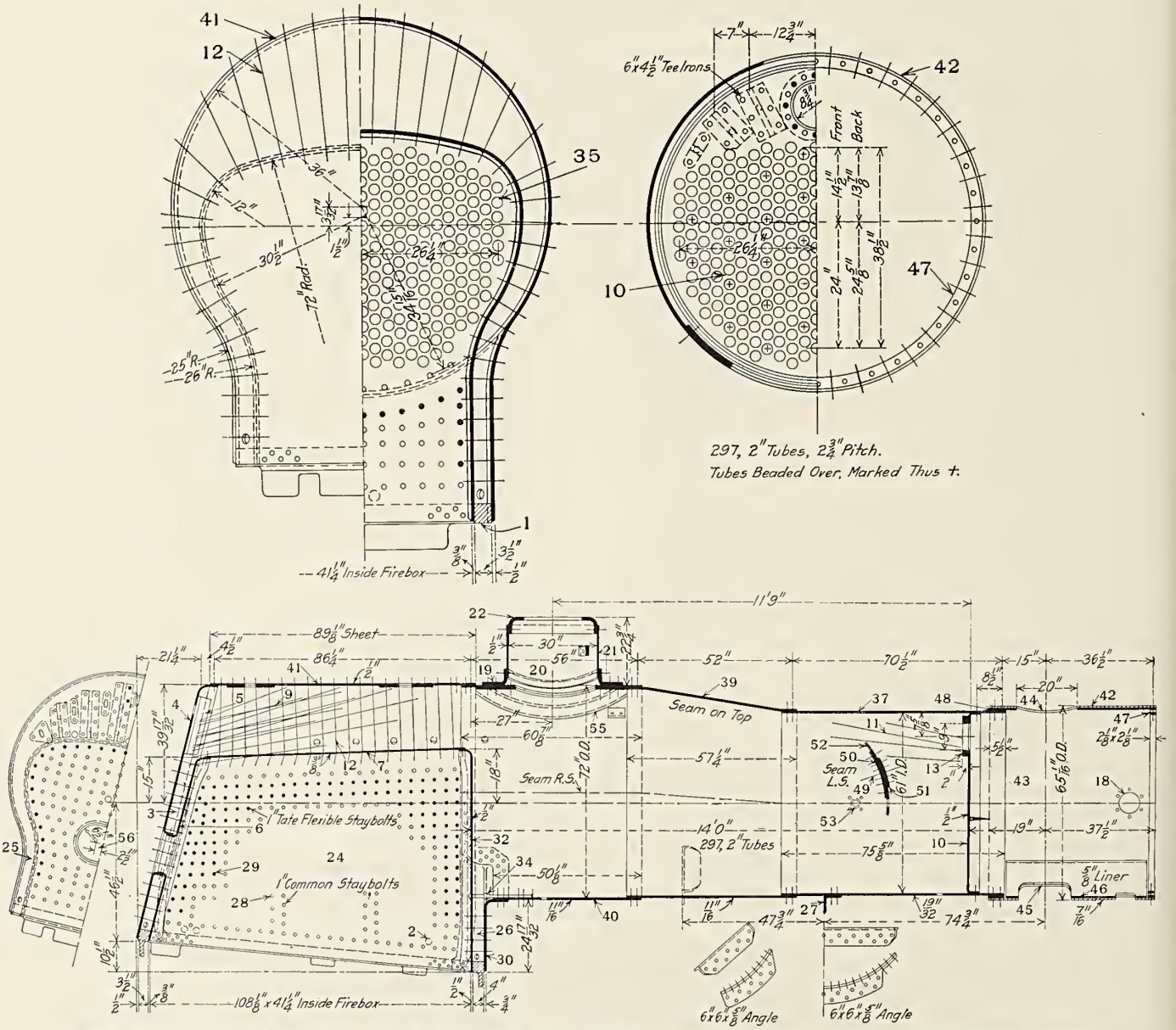

Fig. 172—Extended Wagon Top Boiler with Narrow Firebox for Ten-Wheel (4-6-0) Locomotive. Built for the Central New England by the American Locomotive Company. Cylinders, 20 in. x 26 in. Working Steam Pressure, 200 lbs. per sq. in. Heating Surface—Tubes, 2,164 sq. ft.; Firebox, 160 sq. ft.; Total, 2,324 sq. ft. Grate Area, 31 sq. ft. Fuel, Soft Coal.

Numbers Refer to Names of Parts on Page 236.

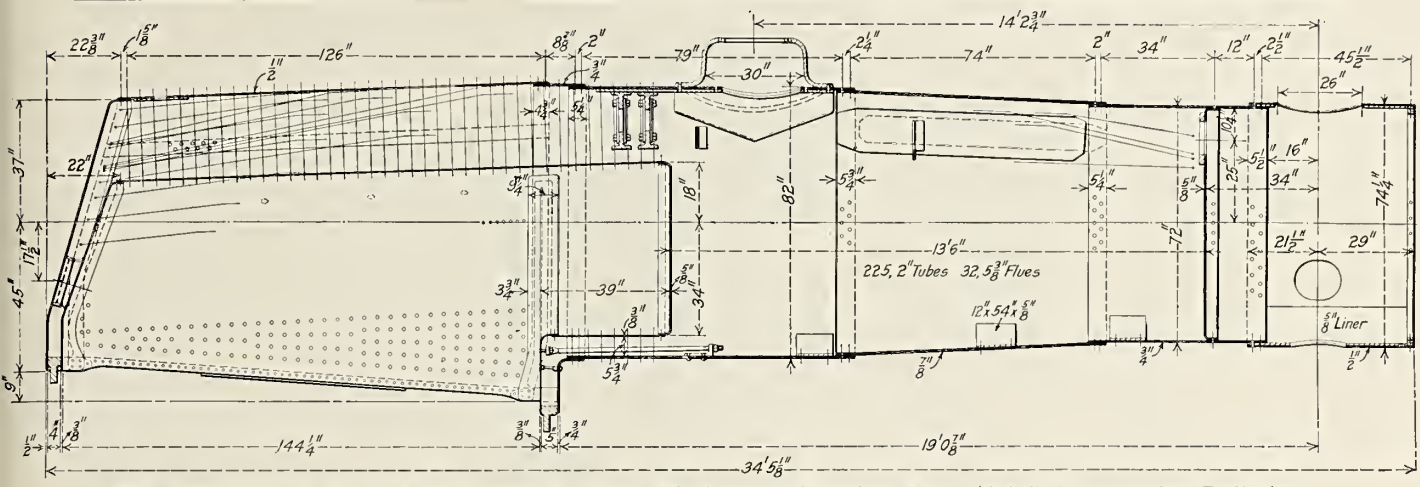

Fig. 173—Conical Type Boiler with Wootten Firebox for Reading Type (4-4-4) Locomotive Built by the Philadelphia & Reading. Cylinders, 23½ in. x 26 in. Steam Pressure, 240 lbs. Heating Surface—Tubes and Flues, 2,199 sq. ft.; Firebox, 292 sq. ft.; Total, 2,491 sq. ft.; Superheater Surface, 679 sq. ft. Grate Area, 108 sq. ft. Fuel, Anthracite Coal.

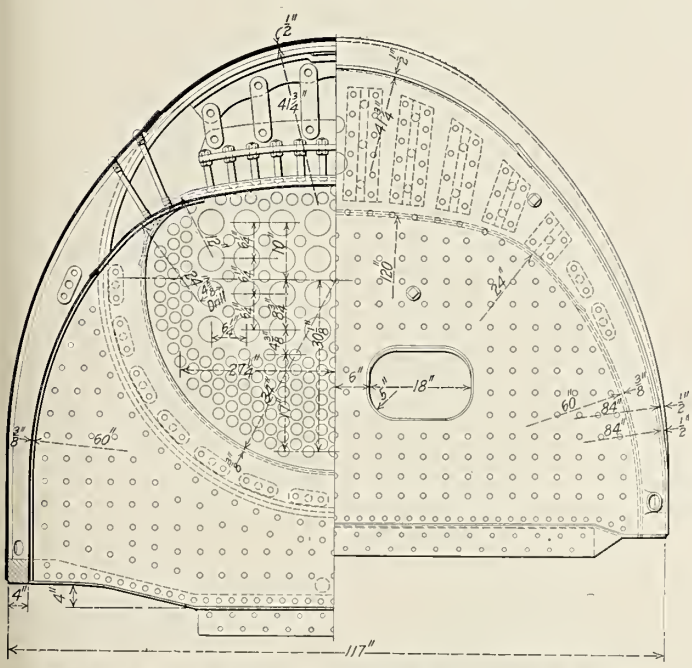

Fig. 174—Cross Section and End Elevation of Boiler Shown in Fig. 173.

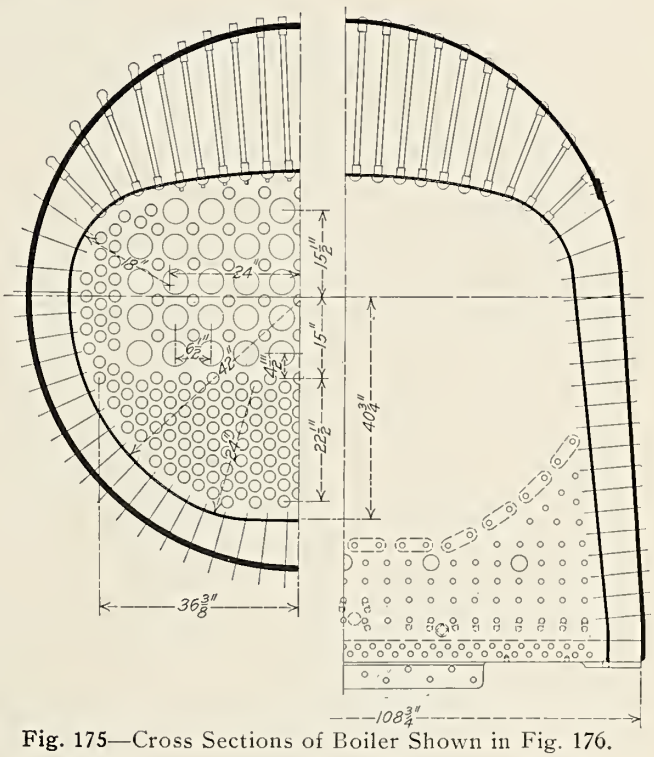

Fig. 175—Cross Sections of Boiler Shown in Fig. 176.

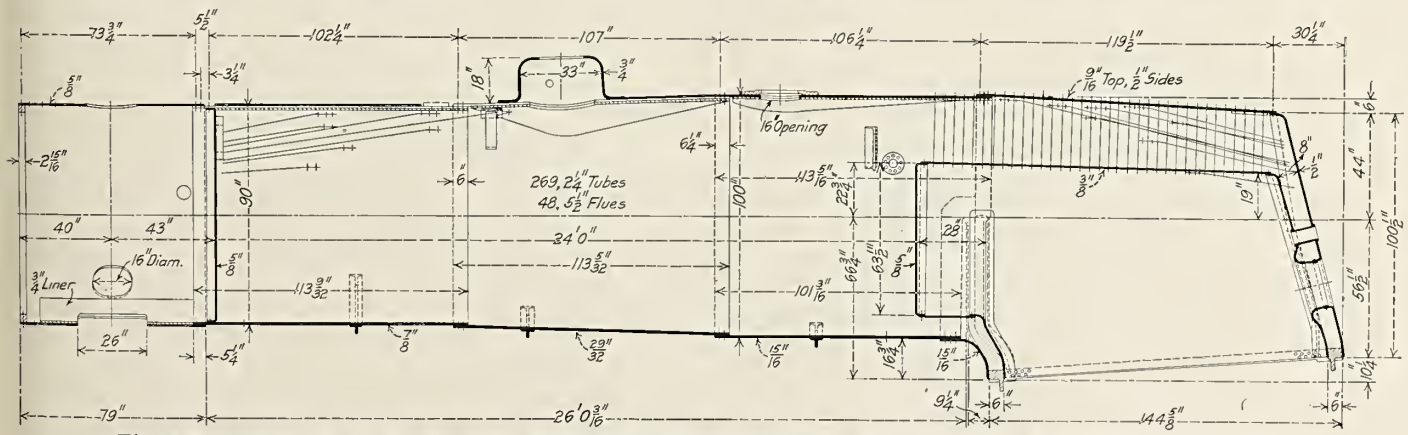

Fig. 176—Conical Type Boiler with Wide Firebox for Santa Fe Type (2-10-2) Locomotive. Built for the Erie Railroad by the Baldwin Locomotive Works. Cylinders, 31 in. x 32 in. Steam Pressure, 200 lbs. Heating Surface—Tubes, 5,443 sq. ft. Arch Tubes, 37 sq. ft.; Firebox, 258 sq. ft.; Total. 5,801 sq ft.; Superheater Surface, 1,377 sq. ft. Grate Area, 88.1 sq. ft. Fuel, Soft Coal.

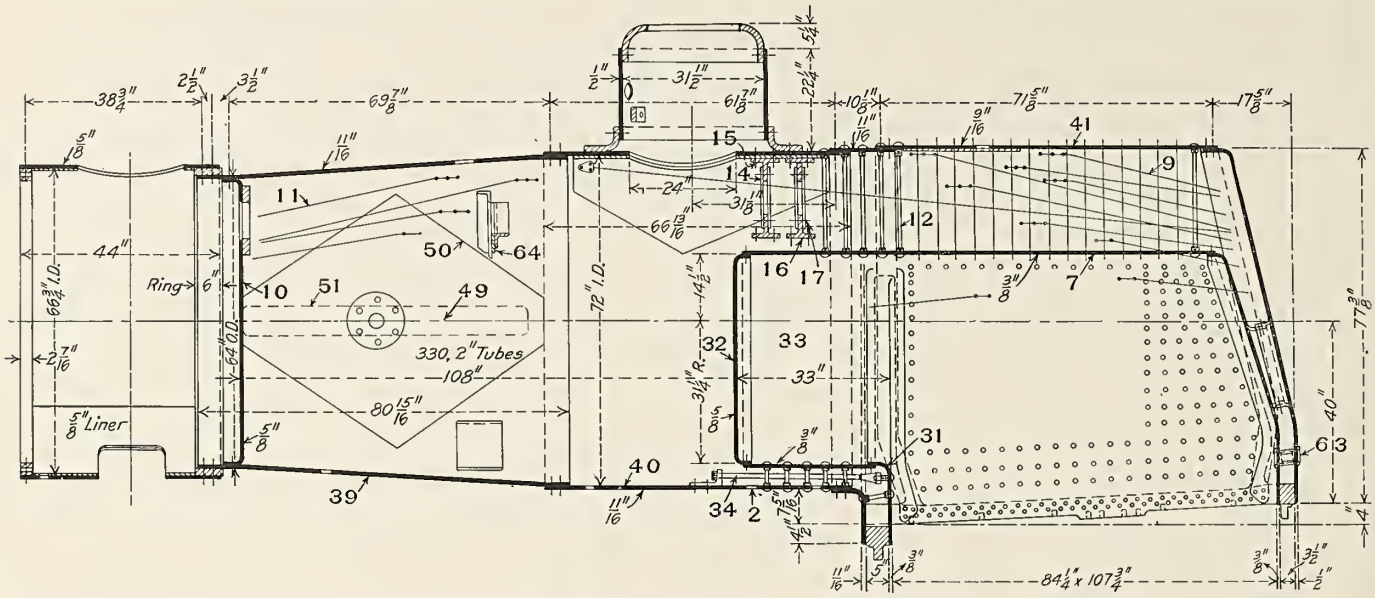

Fig. 177—Conical Type Boiler with Wootten Firebox and Combustion Chamber for Six-Wheel (0-6-0) Switching Locomotive. Built for the Philadelphia & Reading by the Baldwin Locomotive Works. Cylinders, 20 in. x 26 in. Working Steam Pressure, 200 lbs. Heating Surface—Tubes, 1,537 sq. ft.; Firebox, 192 sq. ft.; Total, 1,729 sq. ft. Grate Area, 63.3 sq. ft. Fuel, Fine Anthracite Coal.

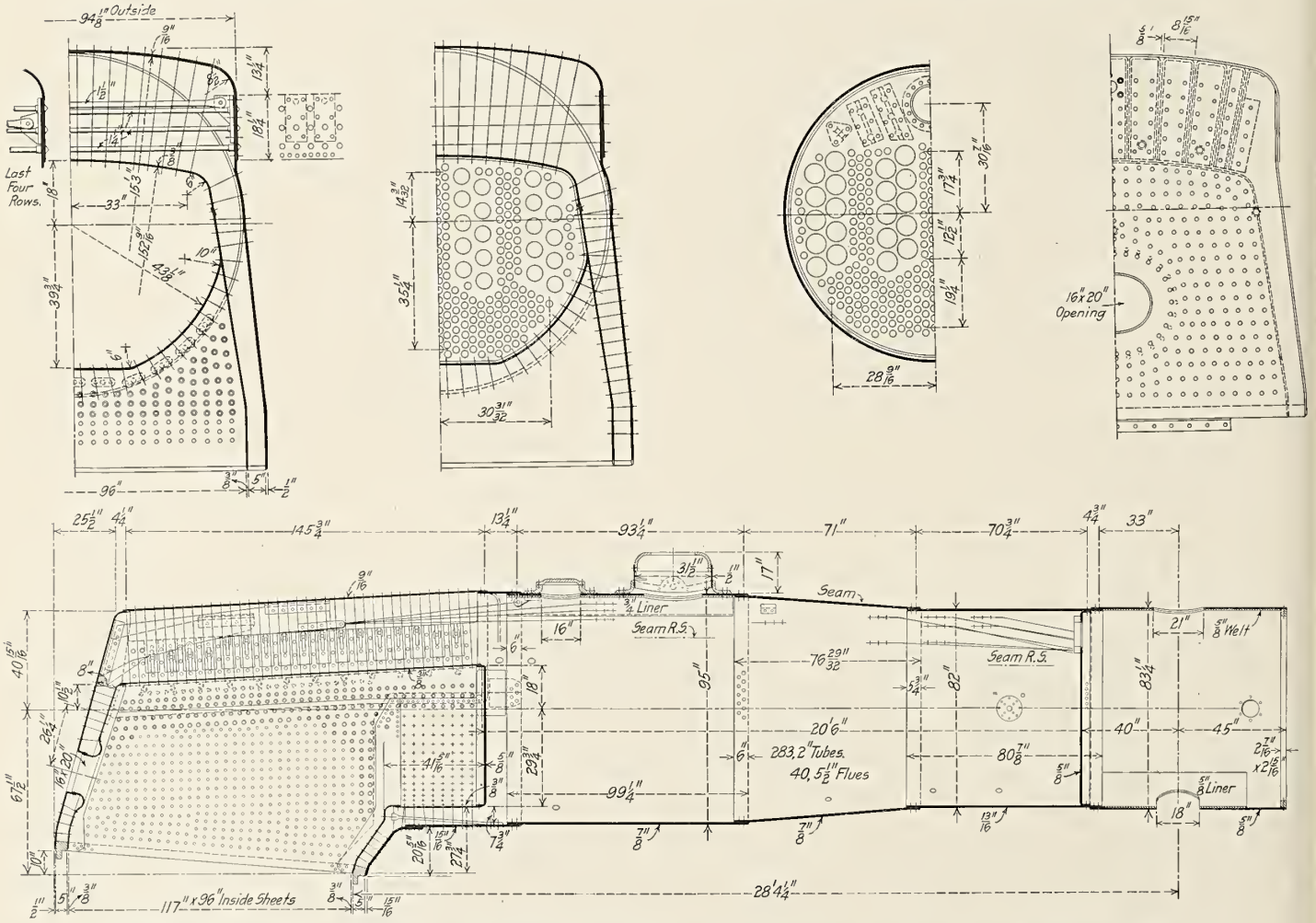

Fig. 178—Conical Type Boiler with Belpaire Firebox and Combustion Chamber for Mountain Type (4-8-2) Locomotive Built for the Great Northern by the Lima Locomotive Corporation. Cylinders, 28 in. x 32 in. Steam Pressure, 180 lbs. Heating Surface—Tubes, 4,200 sq. ft.; Firebox, 340 sq. ft.; Total, 4,540 sq. ft.; Superheater Surface, 1,075 sq ft. Grate Area, 78 sq. ft.

Numbers Refer to Names of Parts on Page 236.

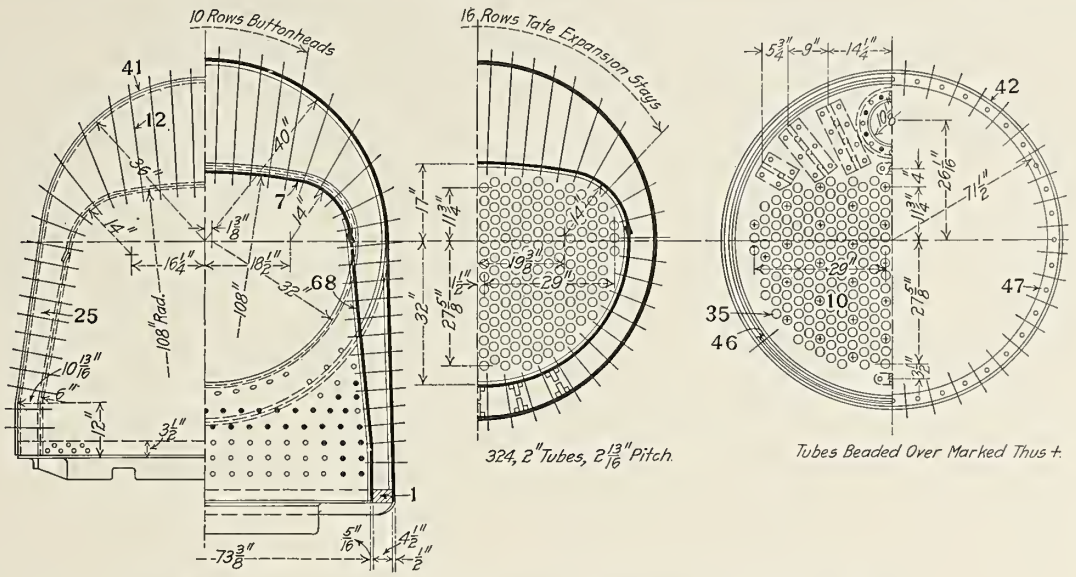

Fig. 179—Cross Sections of Conical Type Boiler Shown in Fig. 182.

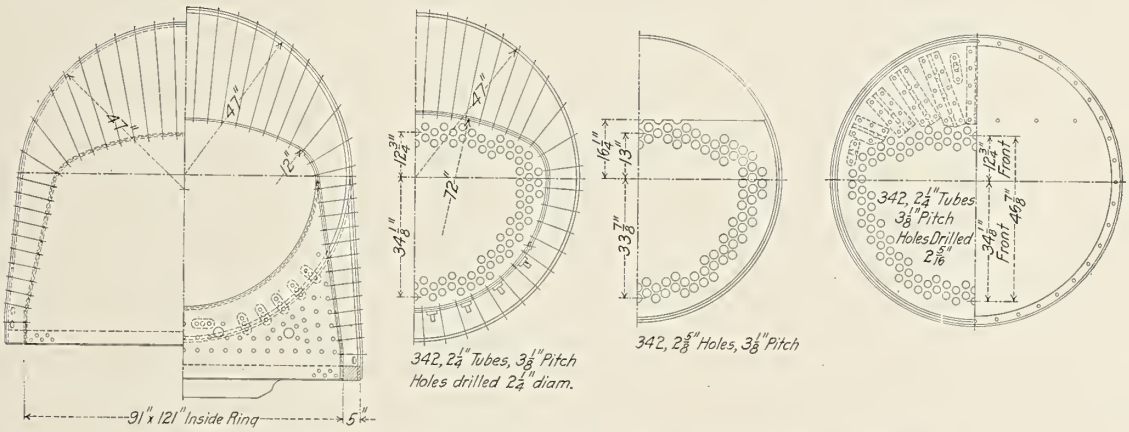

Fig. 180—Cross Sections of Conical Type Boiler Shown in Fig. 183.

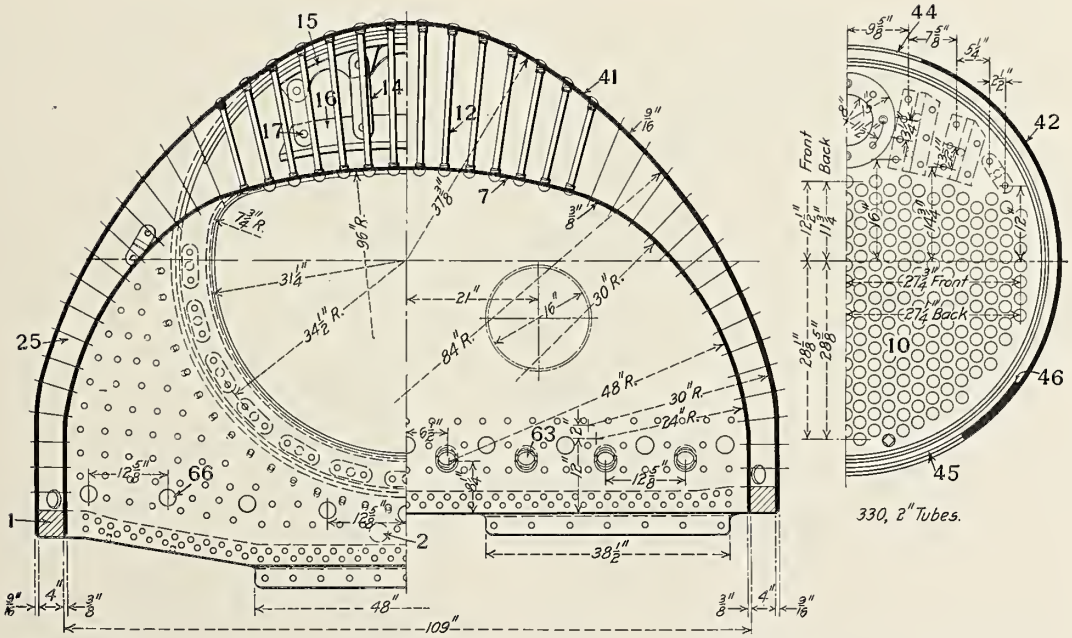

Fig. 181—Cross Sections of Conical Type Boiler with Wootten Firebox Shown in Fig. 177.

Numbers Refer to Names of Parts on Page 236.

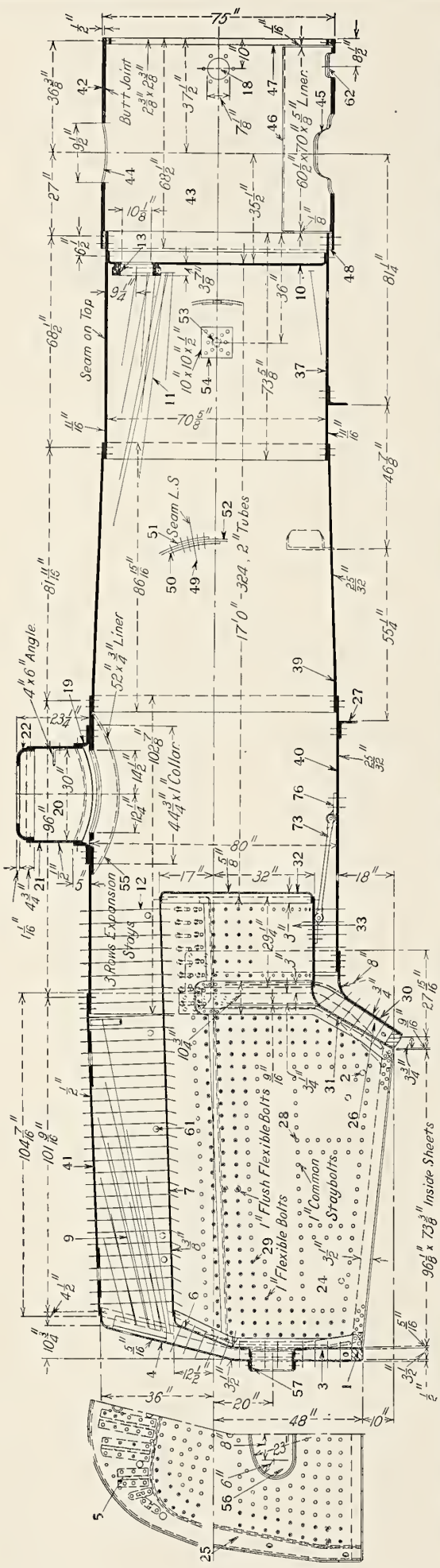

Fig. 182—Conical Type Boiler with Wide Firebox and Combustion Chamber for Pacific Type (4-6-2) Locomotive. Built for the Chicago, Indiana & Louisville by the American Locomotive Company. Cylinders, 23 in. x 28 in. Working Steam Pressure, 185 lbs. per sq. in. Heating Surface—Tubes, 2,884 sq. ft.; Firebox, 230 sq. ft.; Total, 3,114 sq. ft. Grate Area, 48.8 sq. ft. Fuel, Soft Coal.

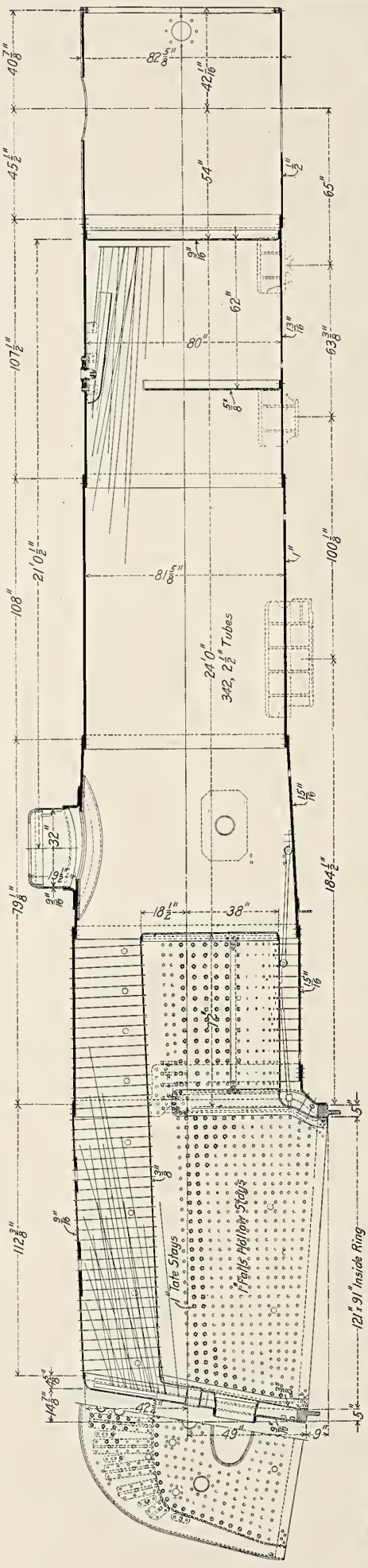

Fig. 183—Conical Type Boiler with Wide Firebox and Combustion Chamber for Mallet Articulated (2-8-8-2) Compound Locomotive. Built for the St. Louis & San Francisco by the American Locomotive Company. Cylinders, 24½ in. and 39 in. x 30 in. Working Steam Pressure, 200 lbs. per sq. in. Heating Surface—Tubes, 4,817 sq. ft.; Firebox, 345 sq. ft.; Total, 5,162 sq. ft. Grate Area, 75.4 sq. ft. Fuel, Soft Coal.

Numbers Refer to Names of Parts on Page 236.

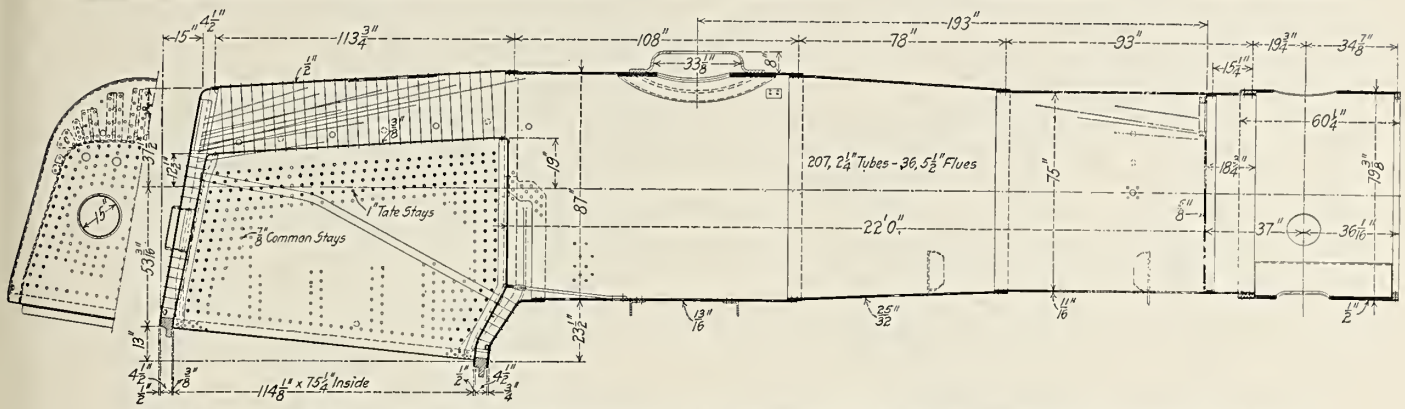

Fig. 184—Conical Type Boiler with Wide Firebox and Security Brick Arch for Pacific Type (4-6-2) Locomotive Built for Experimental Purposes by the American Locomotive Company. Cylinders, 27 in. x 28 in. Steam Pressure, 185 lbs. Heating Surface—Tubes, 3,800 sq. ft.; Firebox, 248 sq. ft.; Total, 4,048 sq. ft.; Superheater Surface, 897 sq. ft. Grate Area, 59.75 sq. ft. Fuel, Soft Coal.

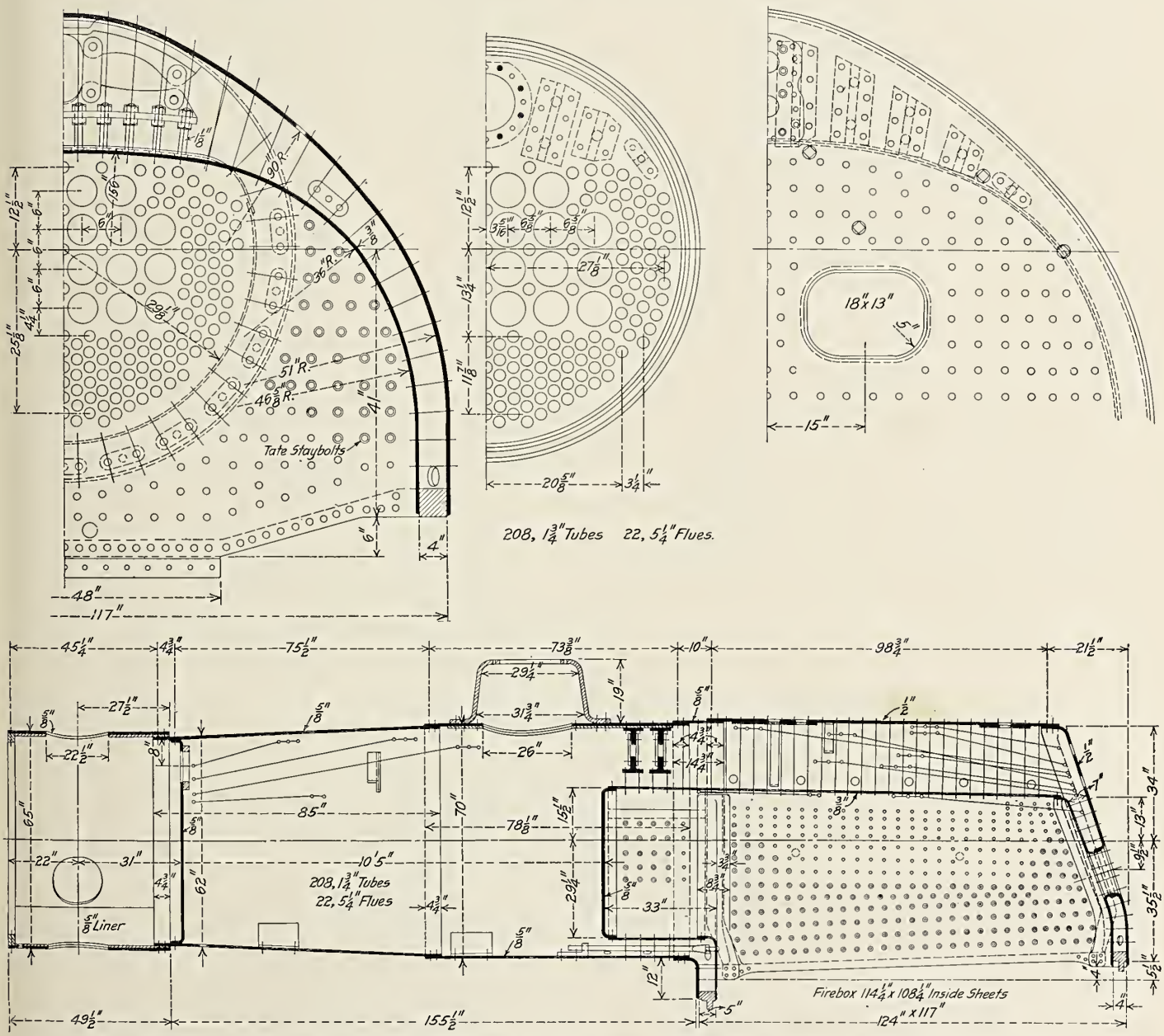

Fig. 185—Conical Type Boiler with Wootten Firebox and Combustion Chamber for American Type (4-4-0) Locomotive. Built for the Philadelphia & Reading by the Baldwin Locomotive Works. Cylinders, 21 in. x 24 in. Steam Pressure, 210 lbs. Heating Surface—Tubes, 1,297 sq ft. Combustion Chamber, 42 sq. ft.; Firebox, 178 sq. ft.; Total, 1,517 sq. ft.; Superheater Surface, 257 sq. ft. Grate Area, 86 sq. ft. Fuel, Anthracite Coal.

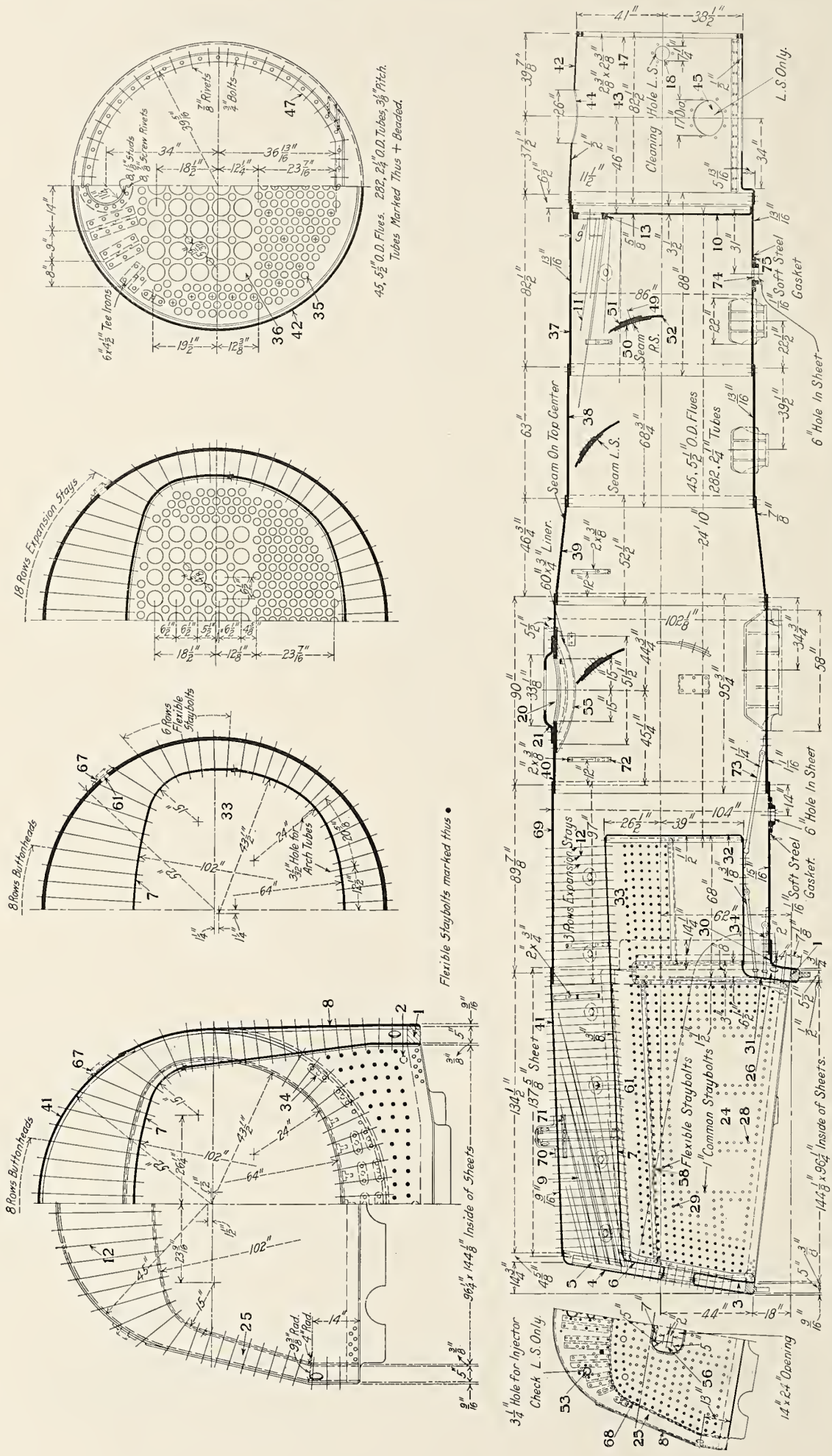

Fig. 186—Conical Type Boiler with Wide Firebox and Combustion Chamber for Mallet Articulated (2-8-8-2) Simple Locomotive. Built for the Pennsylvania by the American Locomotive Company. Cylinders, 27 in. and 27 in. x 28 in. Working Steam Pressure, 160 lbs. per sq. in. Heating Surface—Tubes, 5,701 sq. ft.; Water Tubes, 40 sq. ft.; Firebox, 384 sq. ft.; Total, 6,125 sq. ft.; Superheater Surface, 1,257 sq. ft. Grate Area, 96.5 sq. ft. Fuel, Soft Coal.

Numbers Refer to Names of Parts on Page 236.

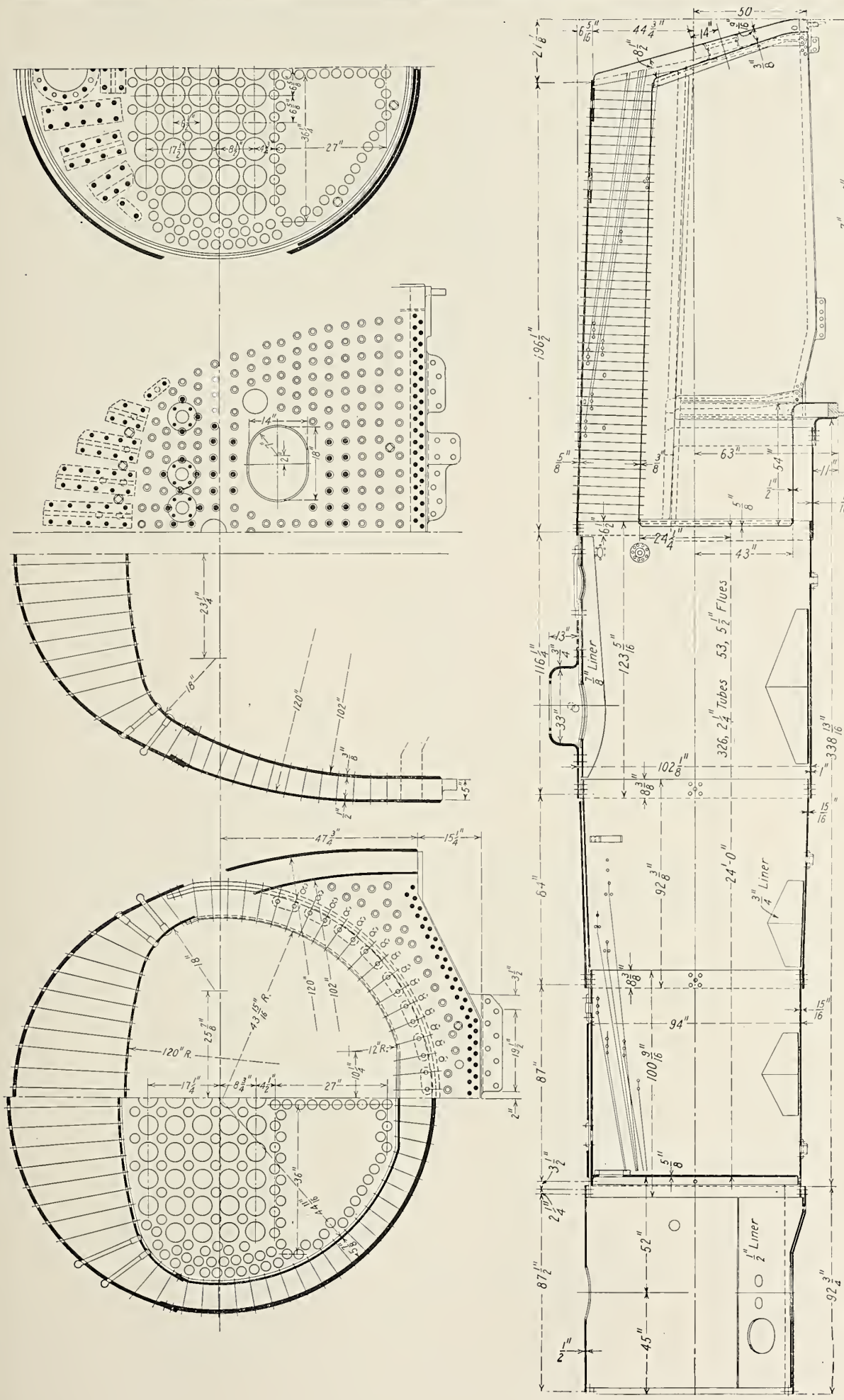

Fig. 187—Conical Type Boiler with Wide Firebox and Combustion Chamber for Mallet Articulated-Triplex (2-8-8-8-2) Compound Locomotive. Built for the Erie Railroad by the Baldwin Locomotive Works. Cylinders, 36 in. x 32 in. Steam Pressure, 210 lbs. Heating Surface—Tubes, 6,418 sq. ft.; Arch Tubes, 88 sq. ft.; Firebox and Combustion Chamber, 380 sq. ft.; Total, 6,886 sq. ft.; Superheating Surface, 1,584 sq. ft. Grate Area, 90 sq. ft. Fuel, Soft Coal.

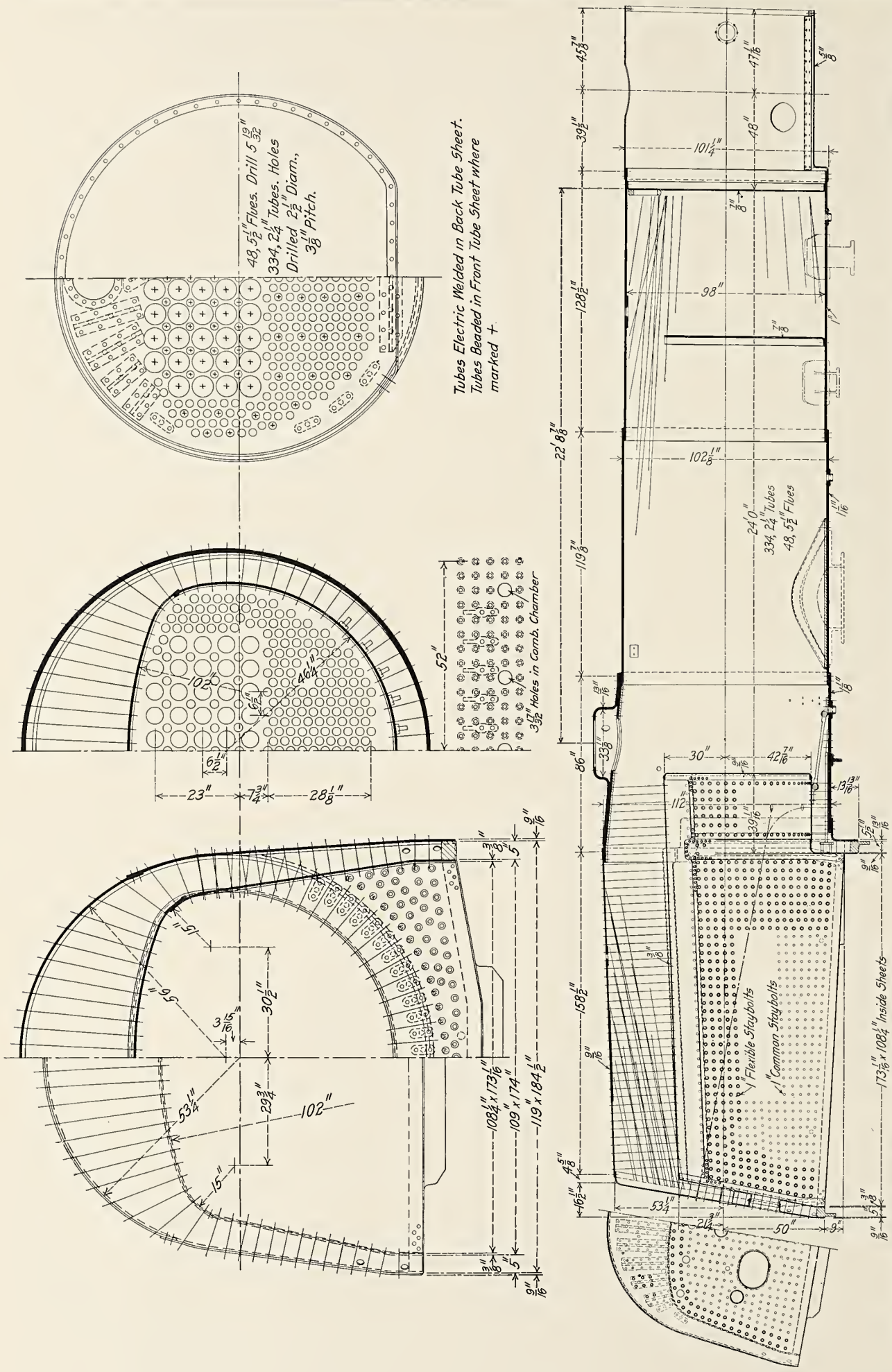

Fig. 188—Wagon Top Boiler with Wide Firebox and Combustion Chamber for Mallet Articulated (2-8-8-2) Compound Locomotive. Built for the Virginian by the American Locomotive Company. Cylinders, 28 in. and 44 in. x 32 in. Steam Pressure, 200 lbs. Heating Surface—Tubes, 6,350 sq. ft.; Firebox, 410 sq. ft.; Total, 6,760 sq. ft.; Superheater Surface, 1,310 sq. ft. Grate Area, 99.2 sq. ft. Fuel, Soft Coal.

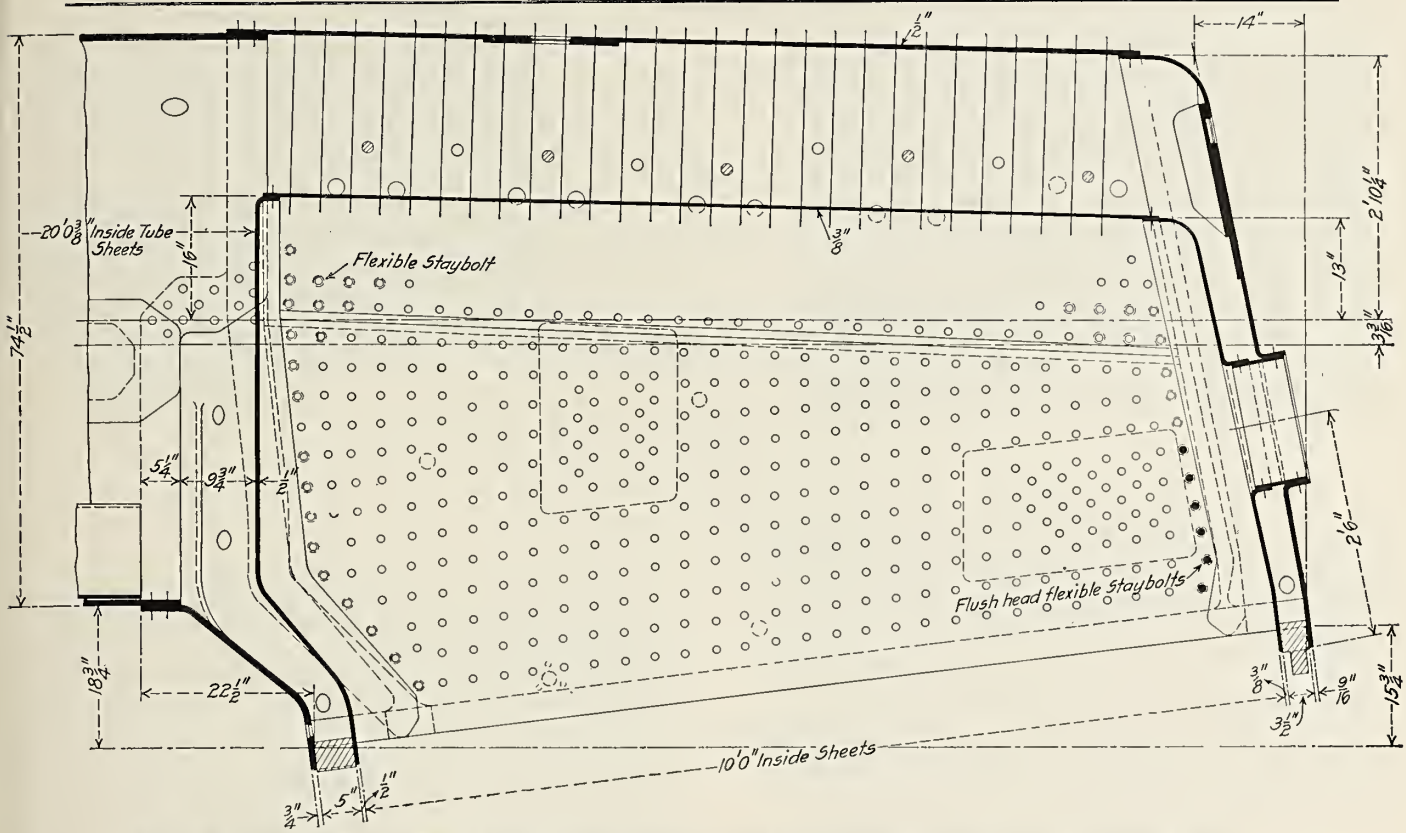

Fig. 189—Wide Firebox with Large Corner Radii for Mallet Simple Locomotive; Canadian Pacific.

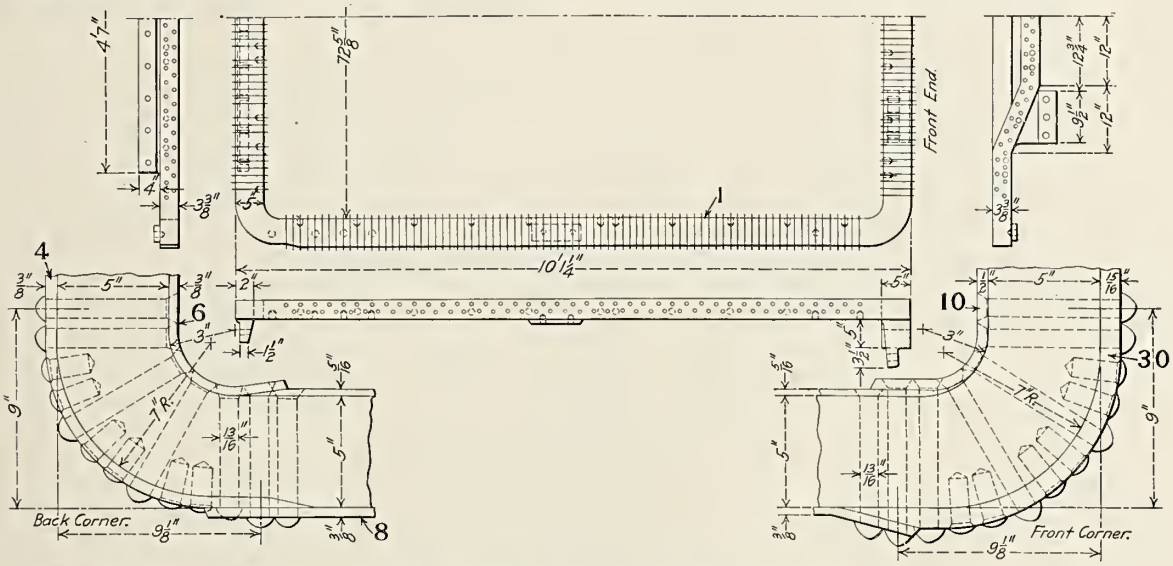

Fig. 190—Firebox Foundation Ring. Atlantic Type (4-4-2) Locomotive; Pennsylvania Railroad.

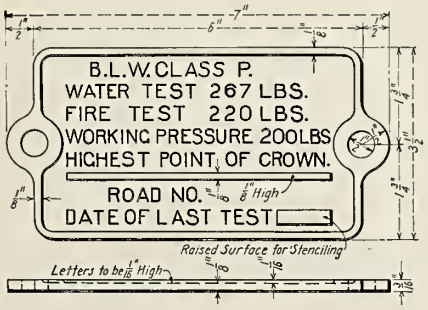

Fig. 191—Standard Boiler Test Plate; Baldwin Locomotive Works.

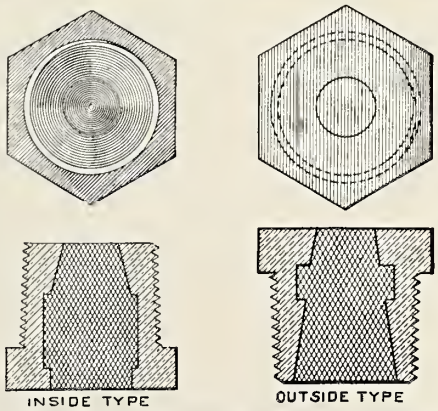

Fig. 192—Fusible Plugs for Crown Sheet.

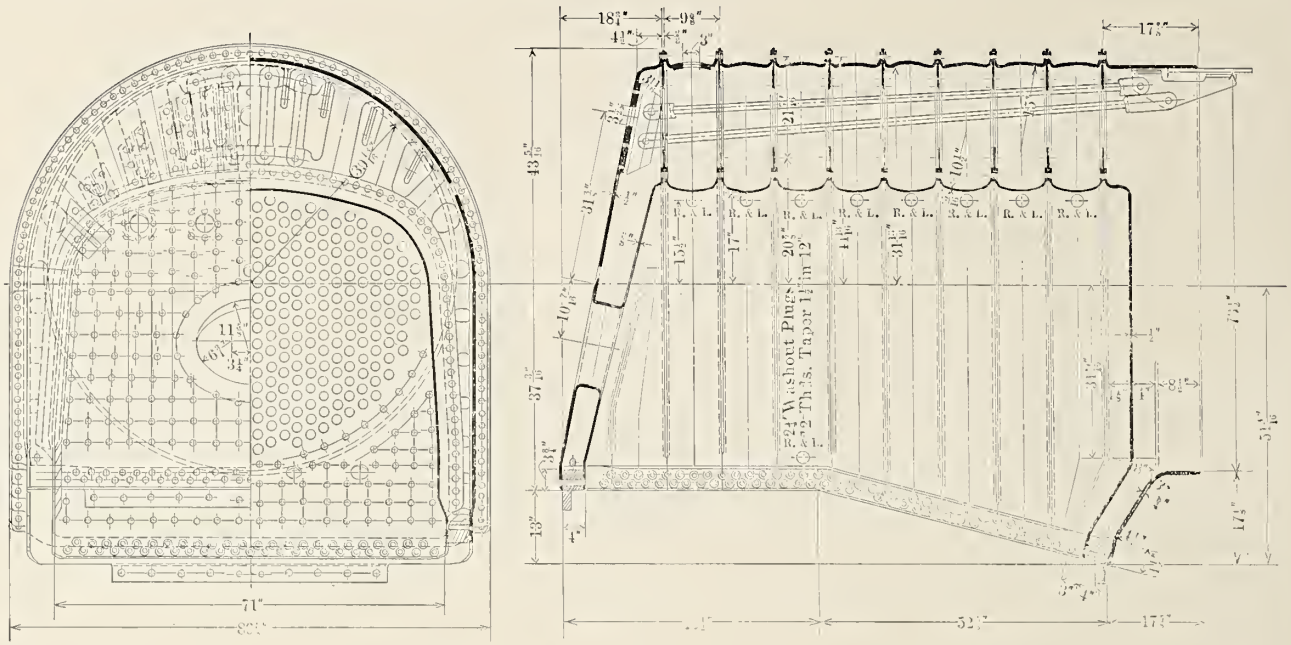

Fig. 193—Jacobs-Shupert Sectional Firebox for St. Louis & San Francisco, Class 742, Ten-Wheel Locomotives; Jacobs-Shupert United States Firebox Company.

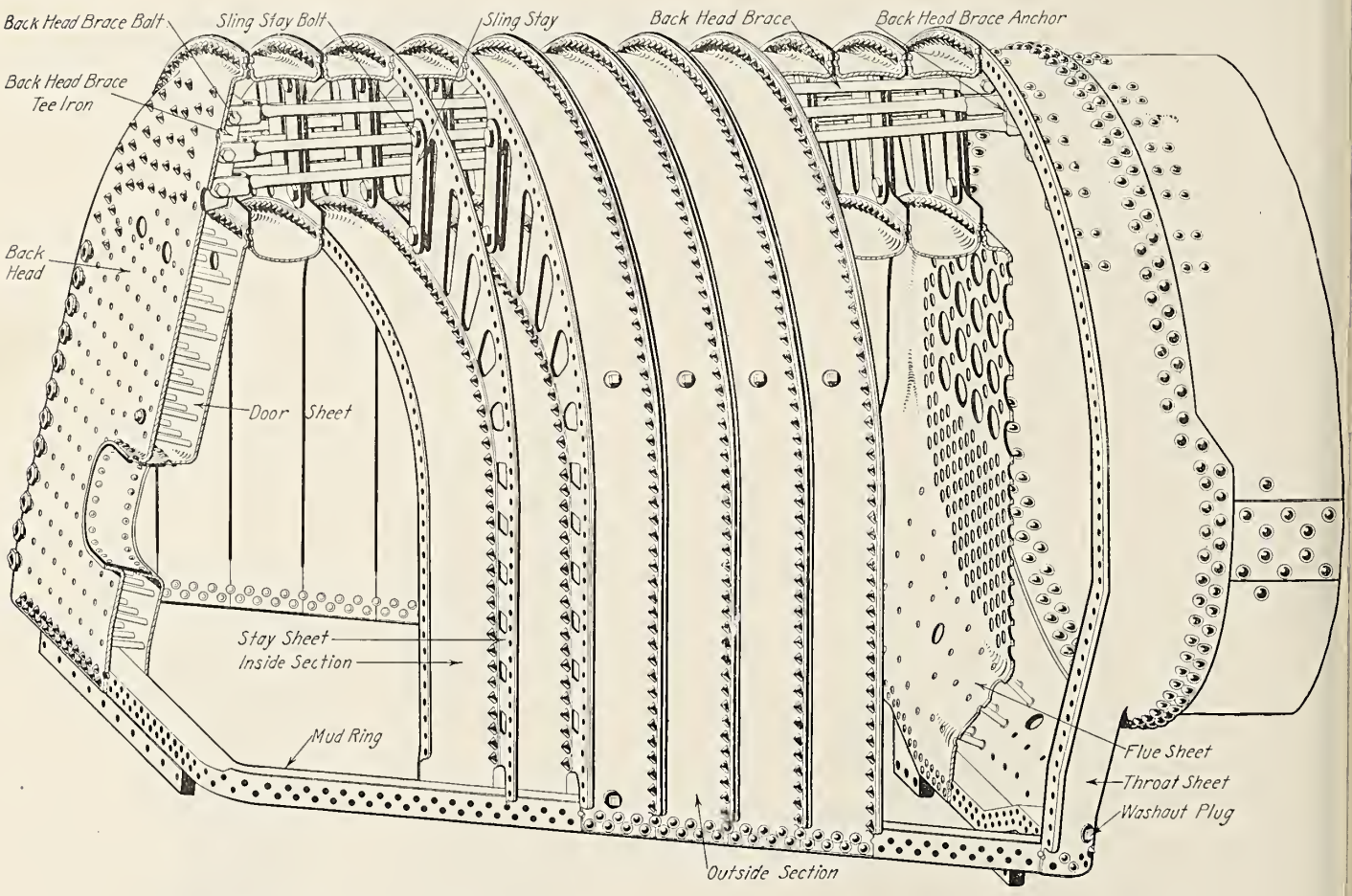

Fig. 194—Jacobs-Shupert Sectional Firebox; Jacobs-Shupert United States Firebox Company.

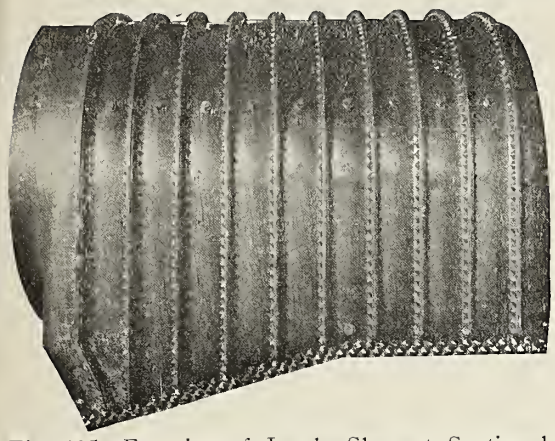

Fig. 195—Exterior of Jacobs-Shupert Sectional Firebox.

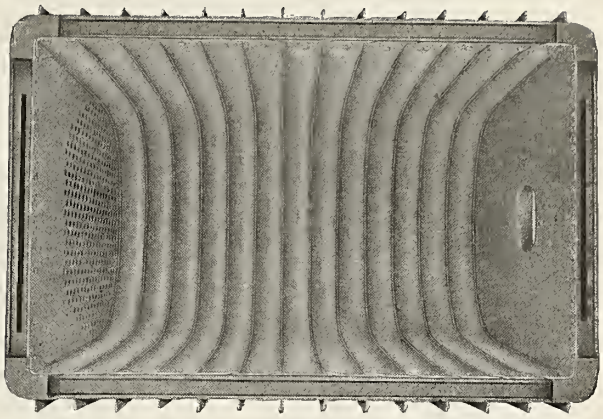

Fig. 196—Interior of Jacobs-Shupert Sectional Firebox.

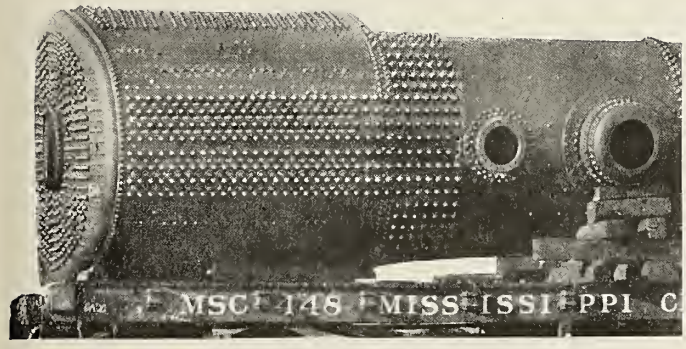

Fig. 197—Exterior of Riegel Water Tube Firebox.

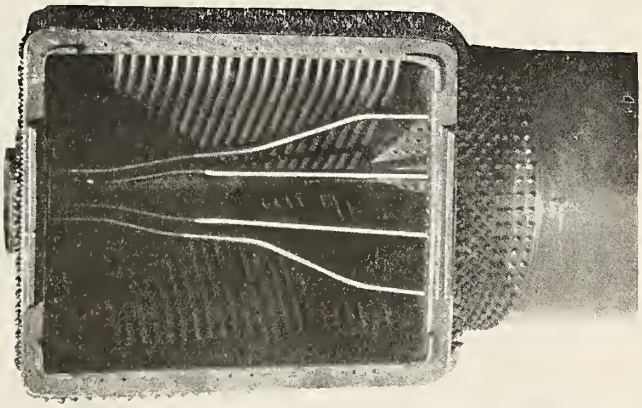

Fig. 198—Interior of Riegel Water Tube Firebox.

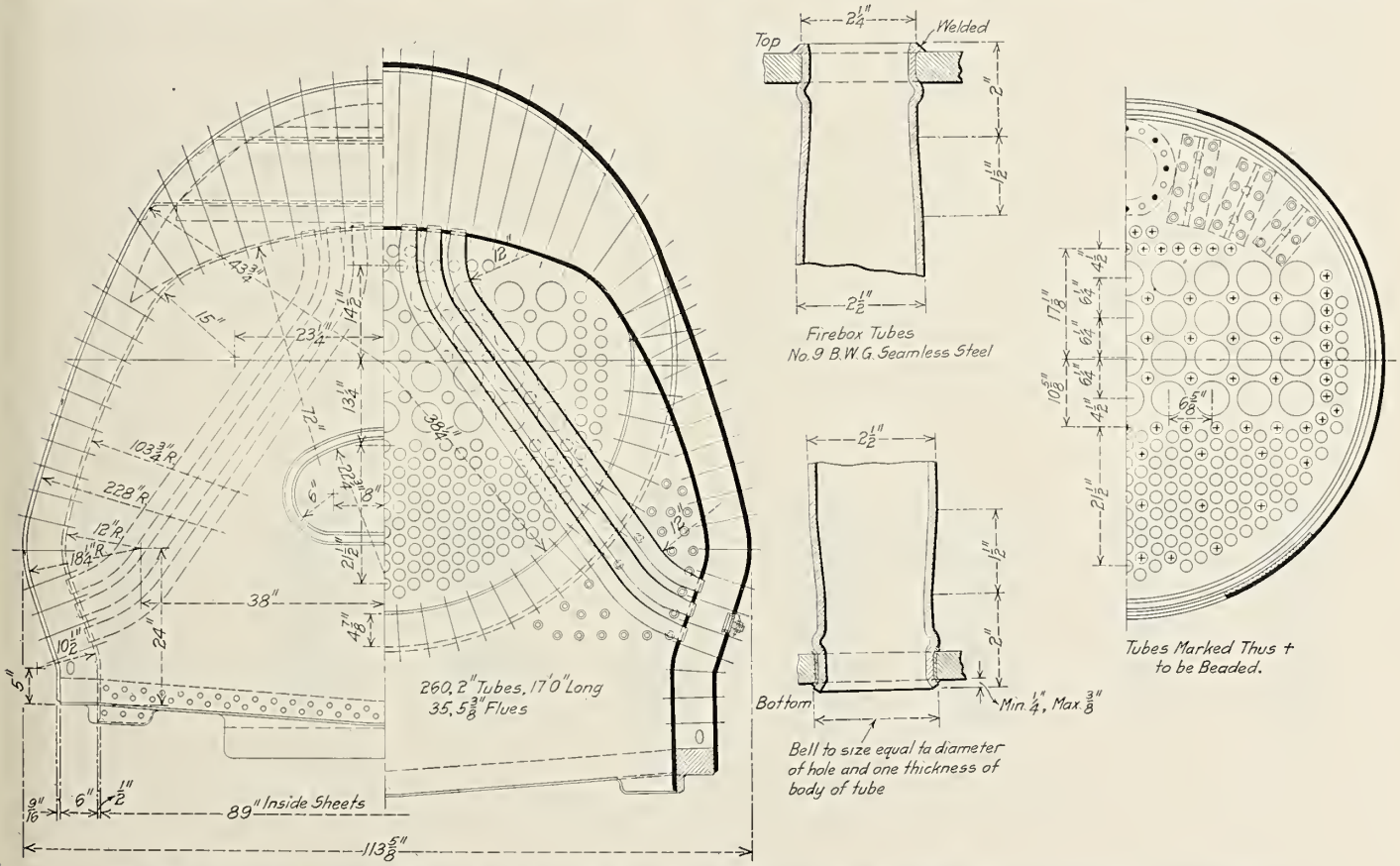

Fig. 199—Arrangement of Tubes in Riegel Water Tube Firebox on Pacific Type (4-6-2) Locomotive. Built for the Delaware, Lackawanna & Western by the Lima Locomotive Corporation.

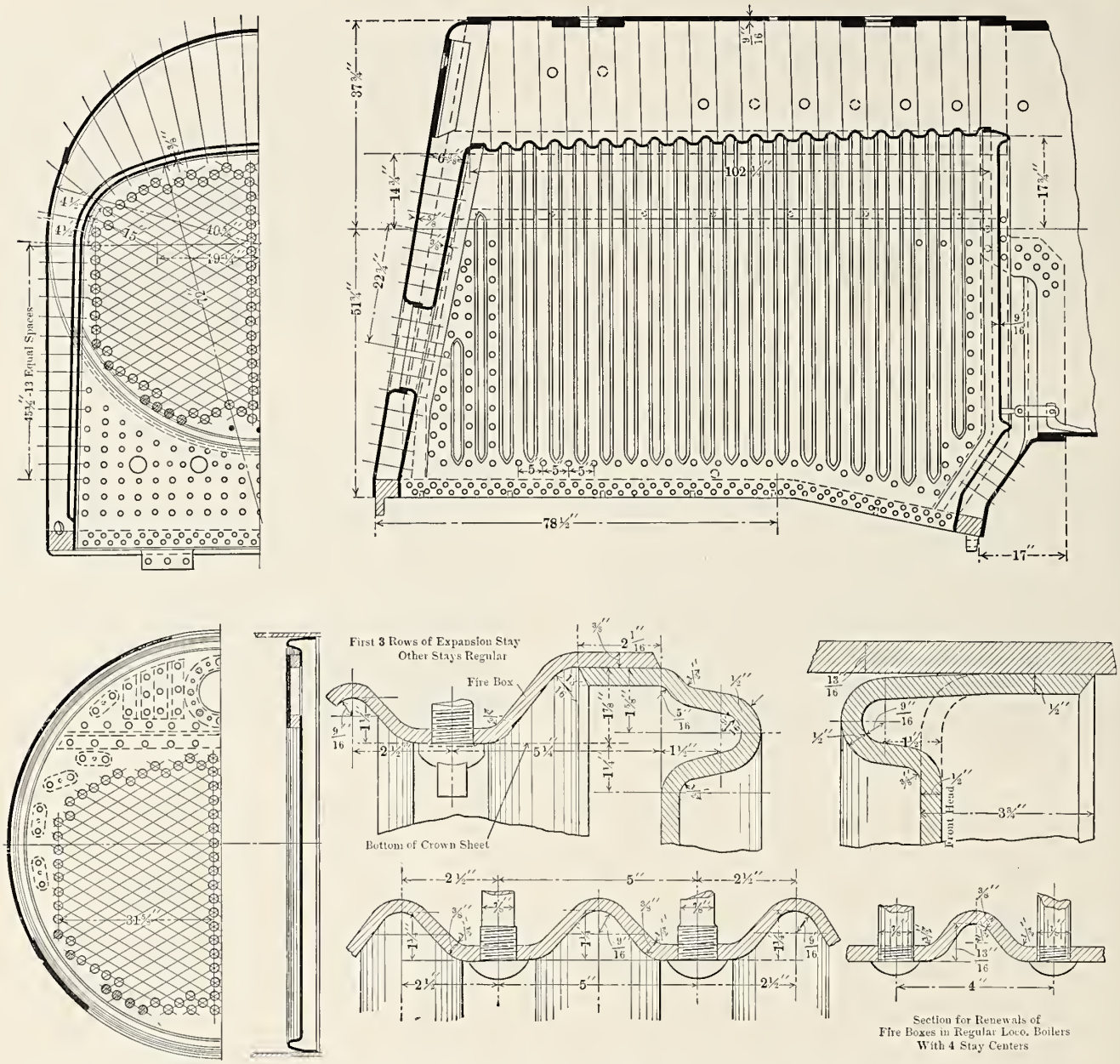

Fig. 200—Application of the Wood Flexible Firebox and Tube Sheets. Built for the Chicago, Burlington & Quincy by the Wm. H. Wood Locomotive Firebox & Tube Plate Company.

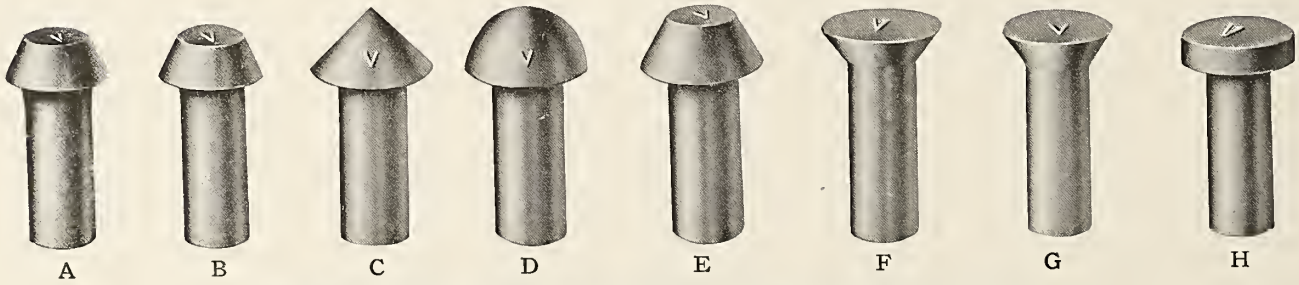

Fig. 201—Various Styles of Rivets; The Champion Rivet Company.

Names of Rivets, Fig. 201.

A *Pan Head Swell Neck Rivet*
B *Pan Head Straight Neck Rivet*
C *Steeple Head Rivet*
D *Button Head Rivet*
E *Cone Head Rivet*
F *Countersunk Flat Head Rivet*
G *Countersunk Oval Head Rivet*
H *Flat Head Straight Neck Rivet*

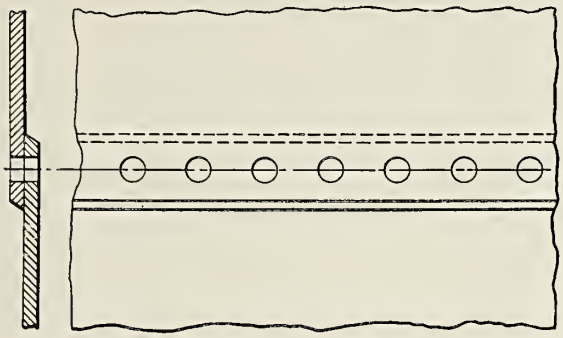

Fig. 202—Single Riveted Lap Joint.

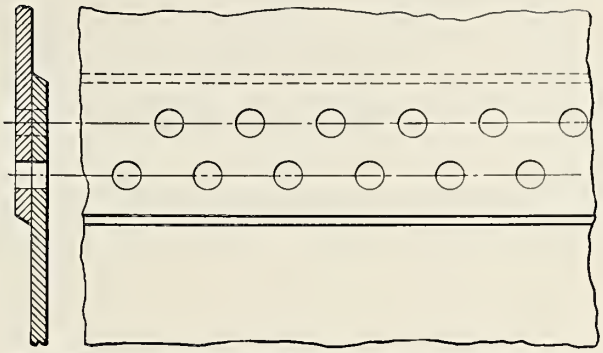

Fig. 203—Double Riveted Lap Joint with Staggered Rivets.

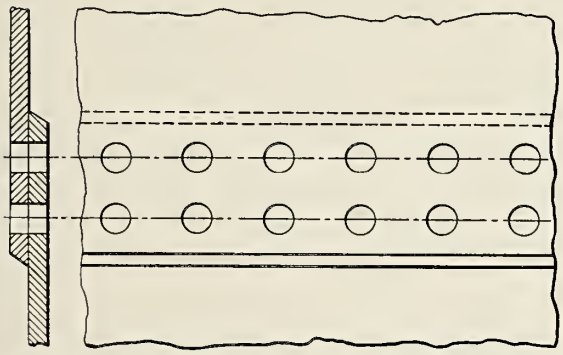

Fig. 204—Double Riveted Lap Joint, Chain Riveting.

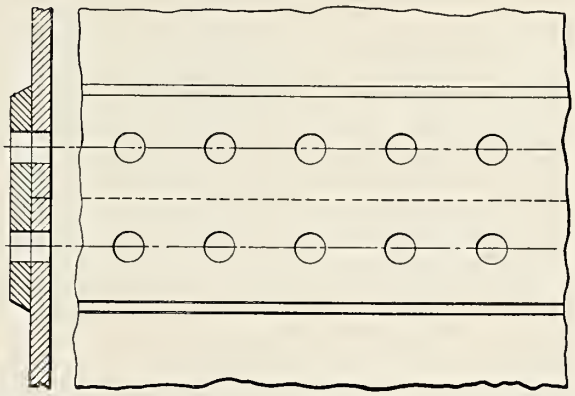

Fig. 205—Single Riveted Butt Joint with One Welt.

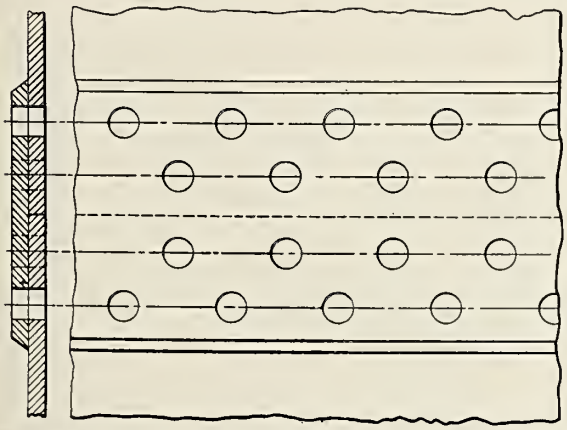

Fig. 206—Double Riveted Butt Joint with One Welt.

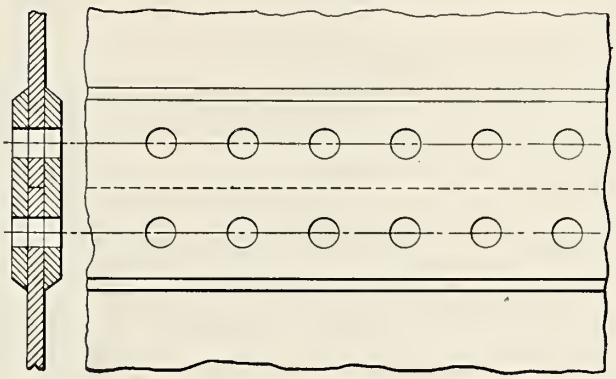

Fig. 207—Single Riveted Butt Joint with Two Welts.

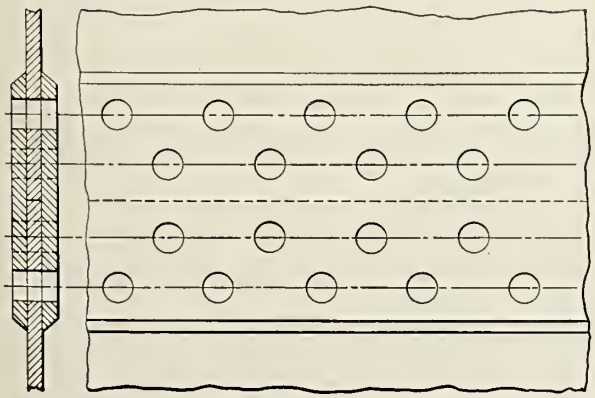

Fig. 208—Double Riveted Butt Joint with Two Welts.

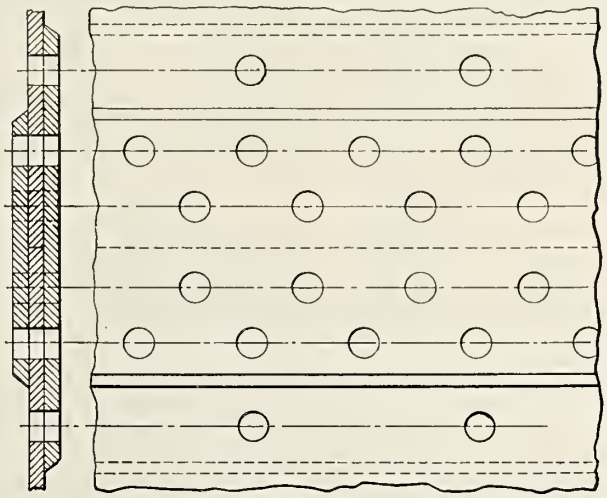

Fig. 209—Triple Riveted Butt Joint with Two Welts.

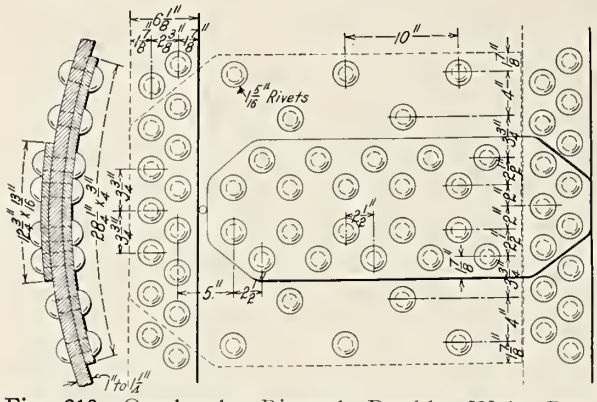

Fig. 210—Quadruple Riveted Double Welt Butt Joint; American Locomotive Company.

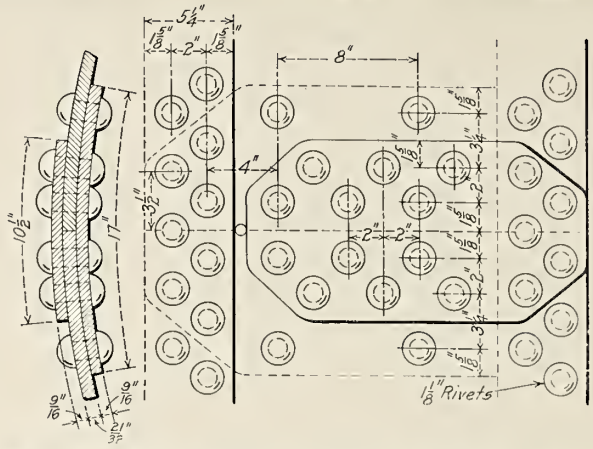

Fig. 211—Triple Riveted Double Welt Butt Joint American Locomotive Company.

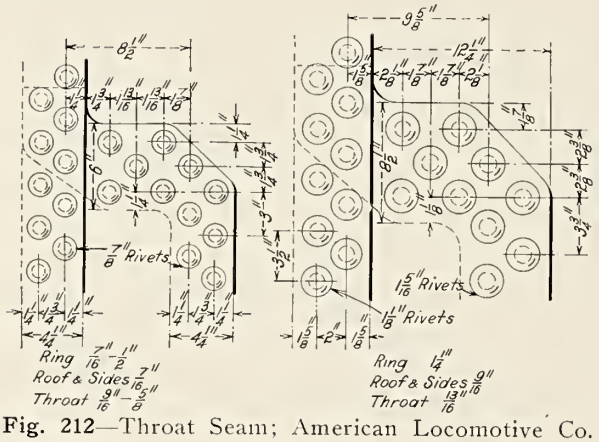

Fig. 212—Throat Seam; American Locomotive Co.

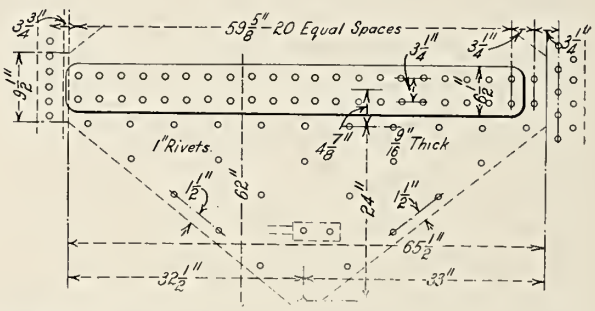

Fig. 213—Diamond Seam; Baldwin Locomotive Wks.

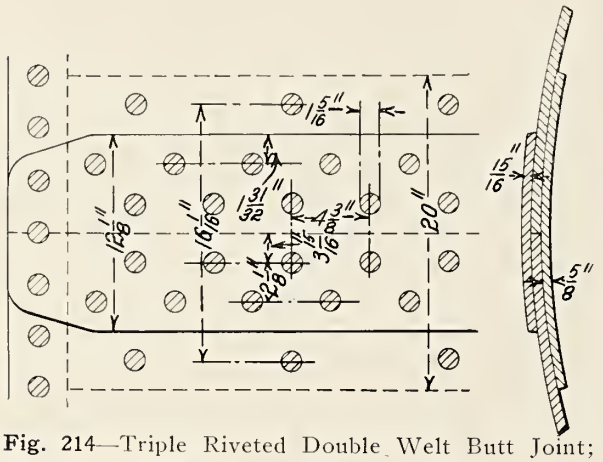

Fig. 214—Triple Riveted Double Welt Butt Joint; Baldwin Locomotive Works.

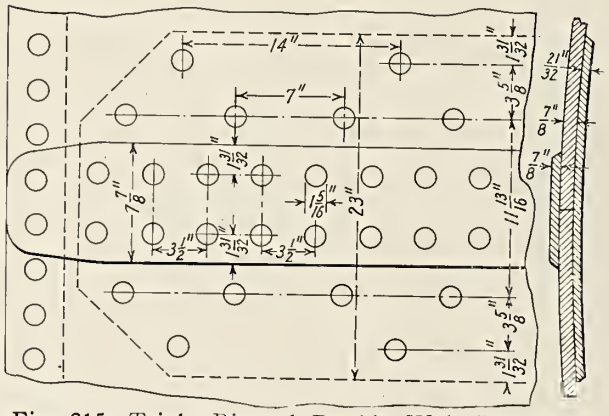

Fig. 215—Triple Riveted Double Welt Butt Joint, Efficiency 90.6 Per Cent; Baldwin Locomotive Works.

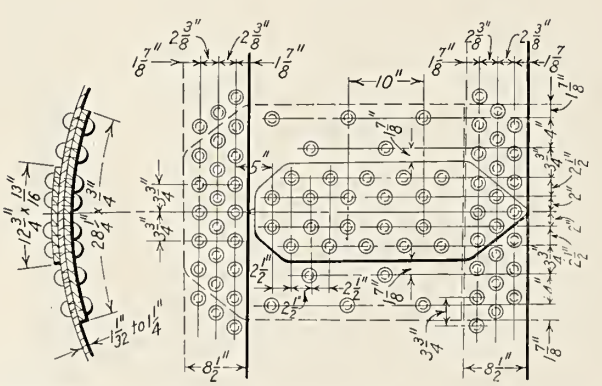

Fig. 216—Quadruple Riveted Double Welt Butt Joint, Efficiency 86.2 Per Cent; American Locomotive Company.

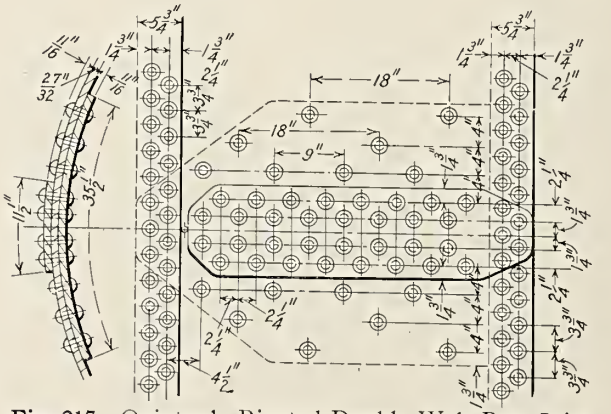

Fig. 217—Quintuple Riveted Double Welt Butt Joint, Efficiency 92.7 Per Cent; American Locomotive Company.

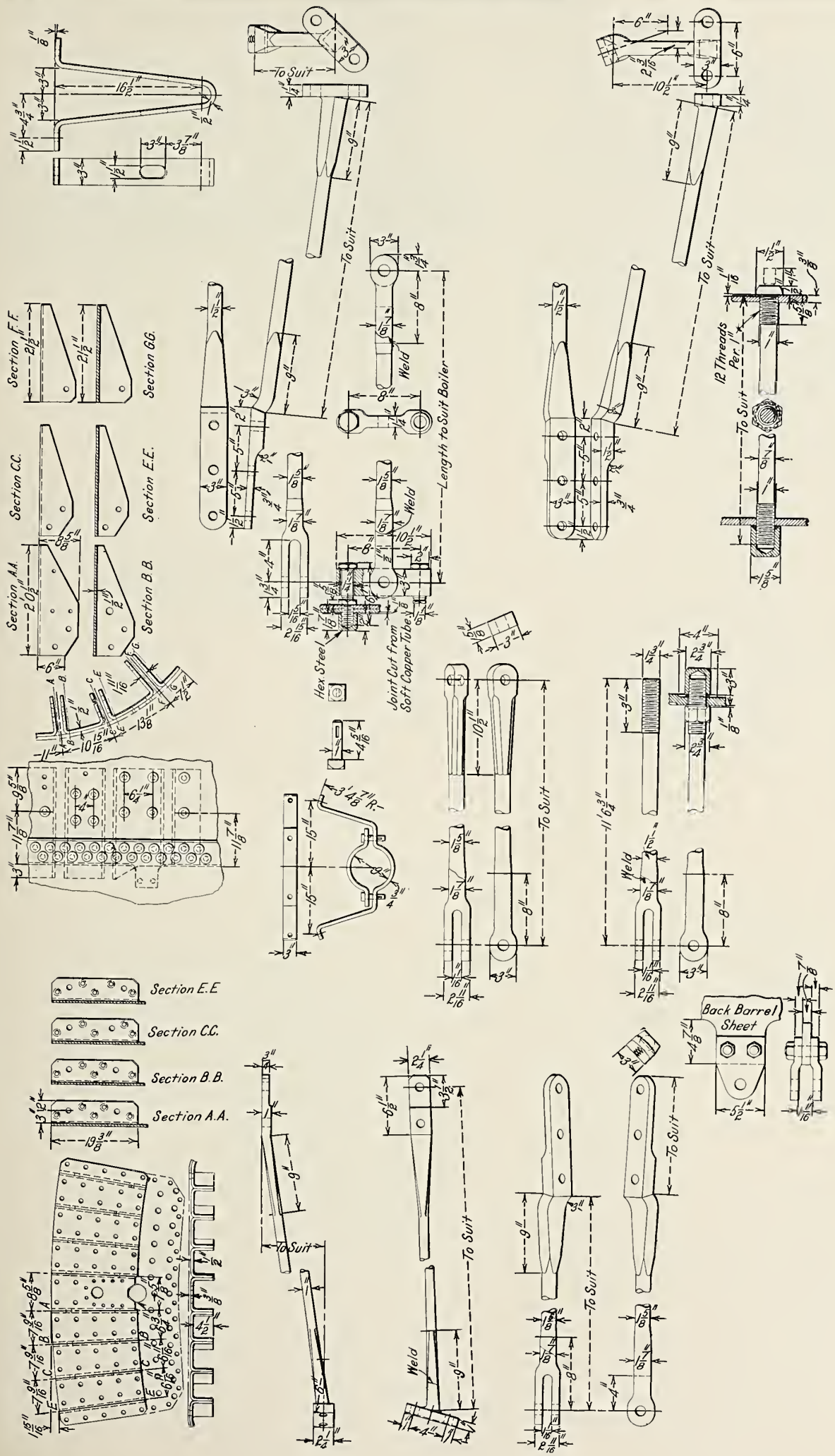

Fig. 218—Details of Boiler Braces for Extended Wagon Top Boiler with Belpaire Firebox. Class E-6 Atlantic Type (4-4-2) Locomotive; Pennsylvania Railroad.

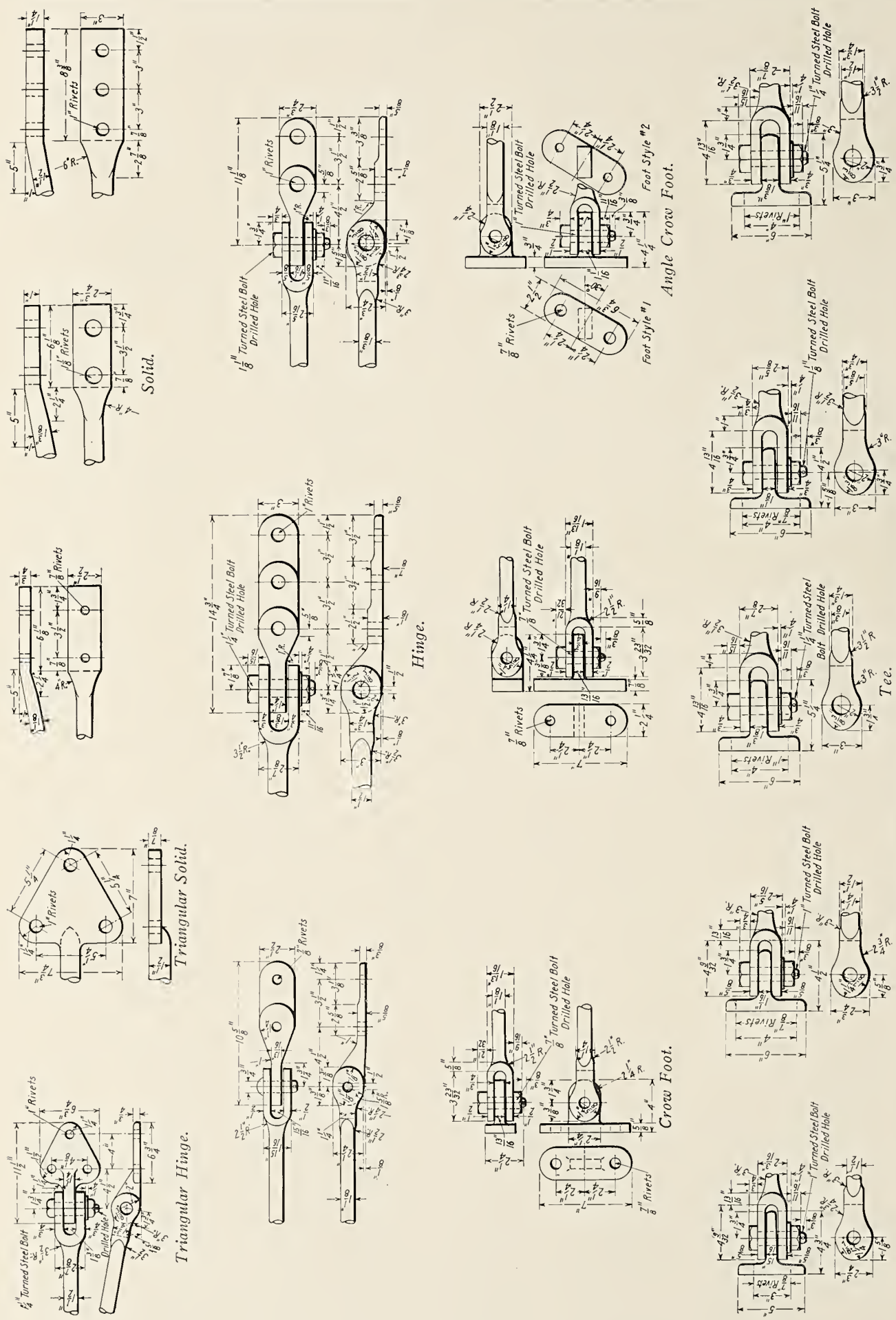

Fig. 219—Details of Boiler Brace Ends; Baldwin Locomotive Works.

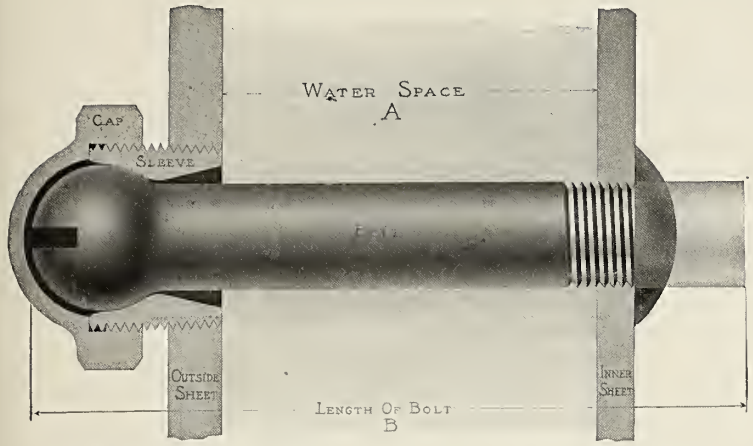

Fig. 220—Tate Flexible Staybolt; Flannery Bolt Company.

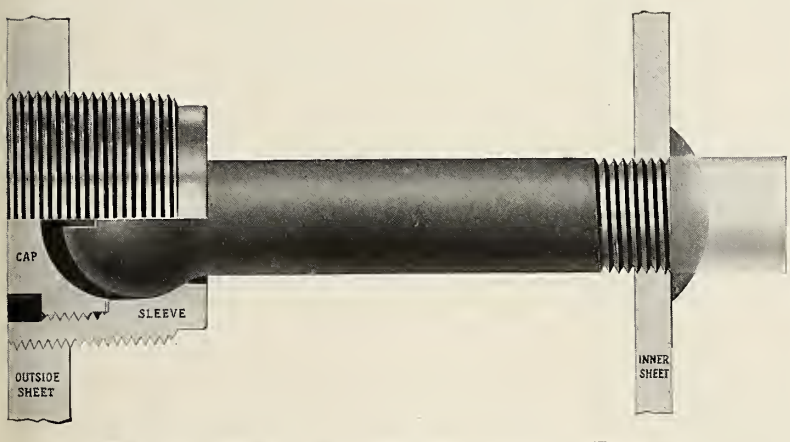

Fig. 221—Flush Tate Flexible Staybolt; Flannery Bolt Company.

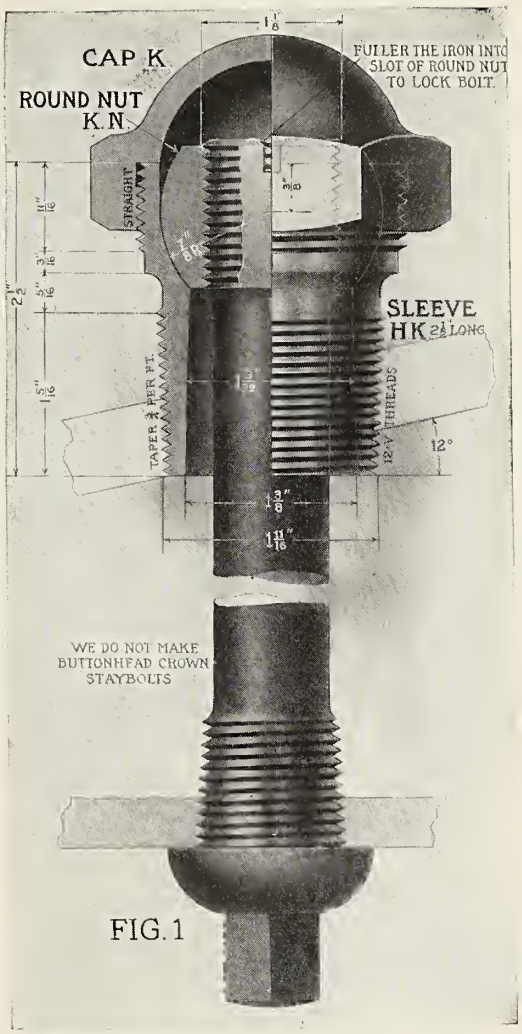

Fig. 222—Tate Flexible Radial Staybolt.

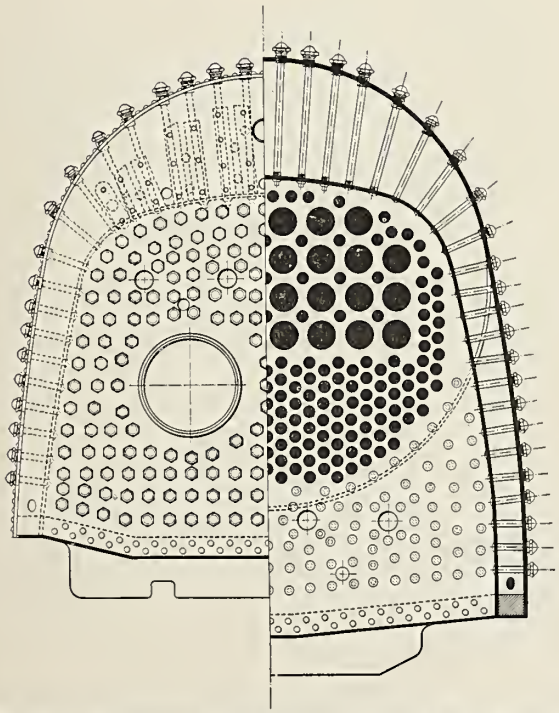

Fig. 223—Complete Installation of the Tate Flexible Staybolt; Flannery Bolt Company.

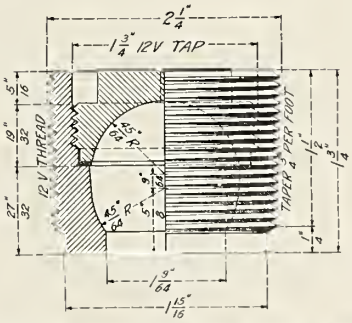

Fig. 224—Sleeve and Cap for Flush Tate Flexible Staybolt; Flannery Bolt Company.

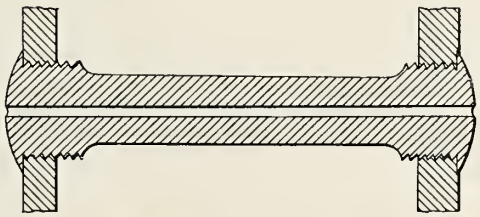

Fig. 225—Hollow Staybolt; Falls Hollow Staybolt Co.

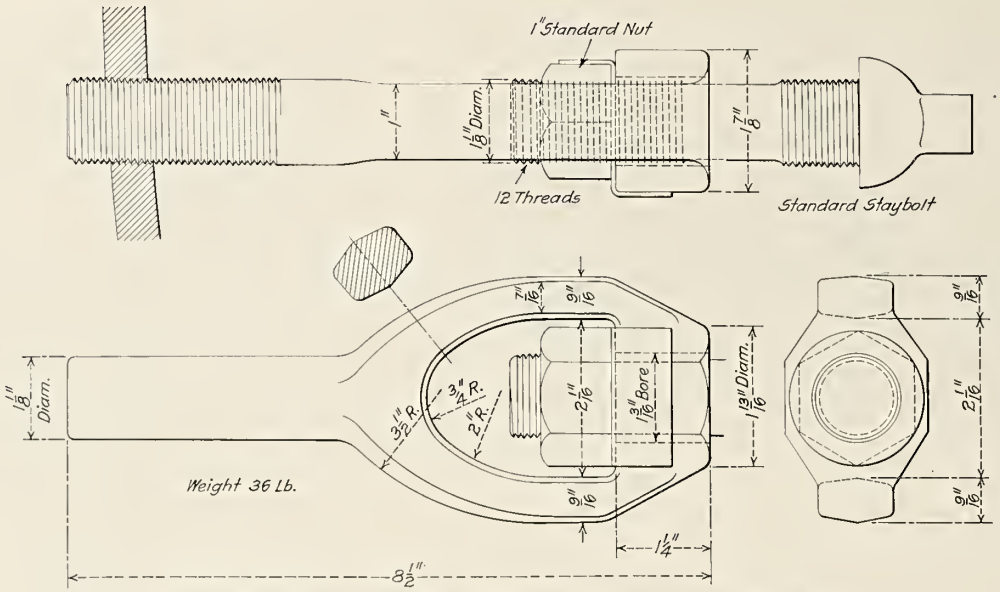

Fig. 226—Expansion Stay; Baldwin Locomotive Works.

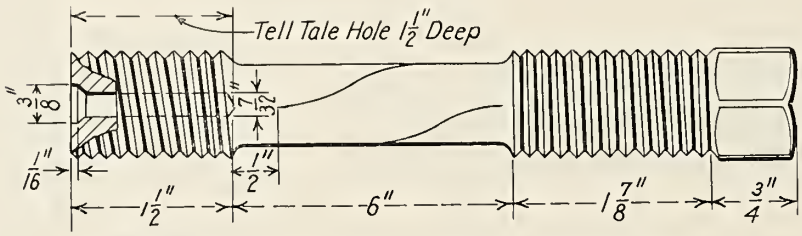

Fig. 227—Flexible Staybolt; American Flexible Bolt Company.

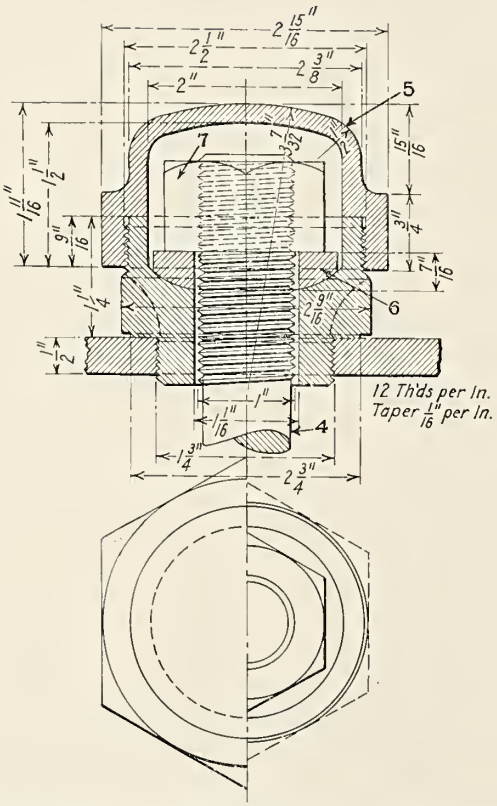

Fig. 228—Nut for Expansion Stay; Pennsylvania Railroad.

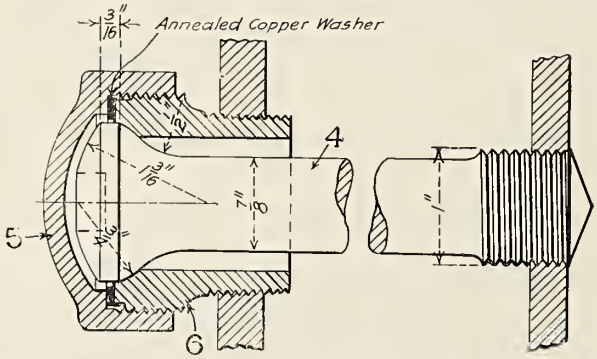

Fig. 229—Flexible Staybolt; Pennsylvania Railroad.

Names of Parts of Staybolts, Figs. 228-229.

4 *Staybolt Body*
5 *Cap*
6 *Sleeve or Seat Plug*
7 *Nut*

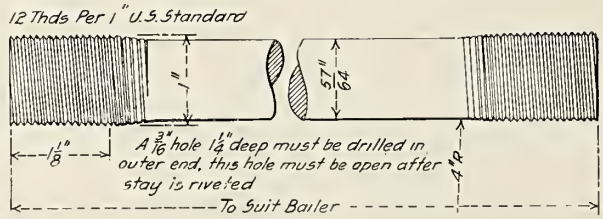

Fig. 230—Common Staybolt; Pennsylvania Railroad.

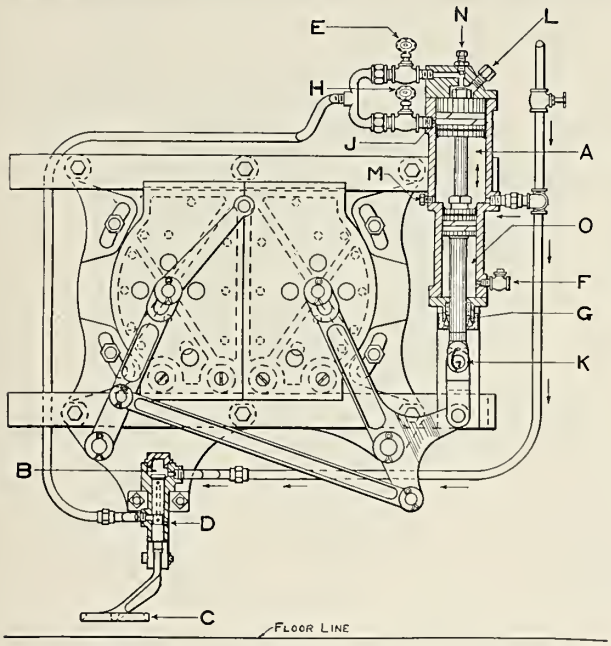

Fig. 231—Shoemaker Pneumaticaly Operated Fire Door, Closed Position; The National Railway Devices Company.

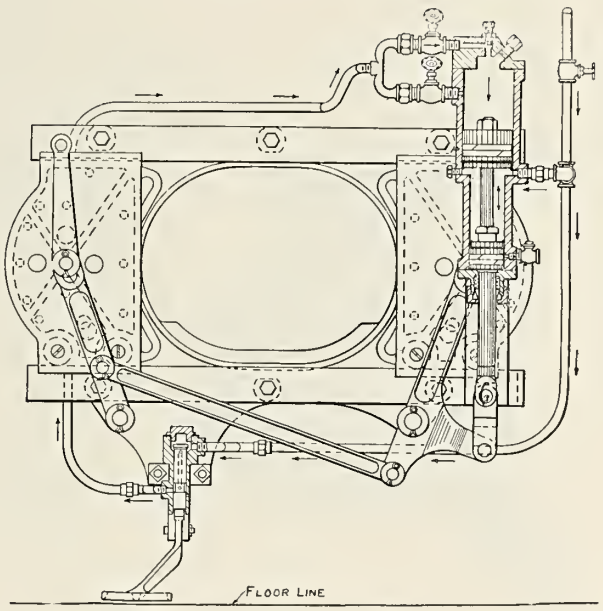

Fig. 232—Shoemaker Pneumatically Operated Fire Door, Open Position; The National Railway Devices Company.

Names of Parts of the Shoemaker Fire Door, Figs. 231 and 232.

A *Operating Cylinder*
B *Foot Valve*
C *Foot Pedal*
D *Exhaust Port*
E *Admission Valve*
F *Vacuum Valve*
G *Metallic Packing*
H *Exhaust Valve*
L *Oil Plug*
N *Set Screw*

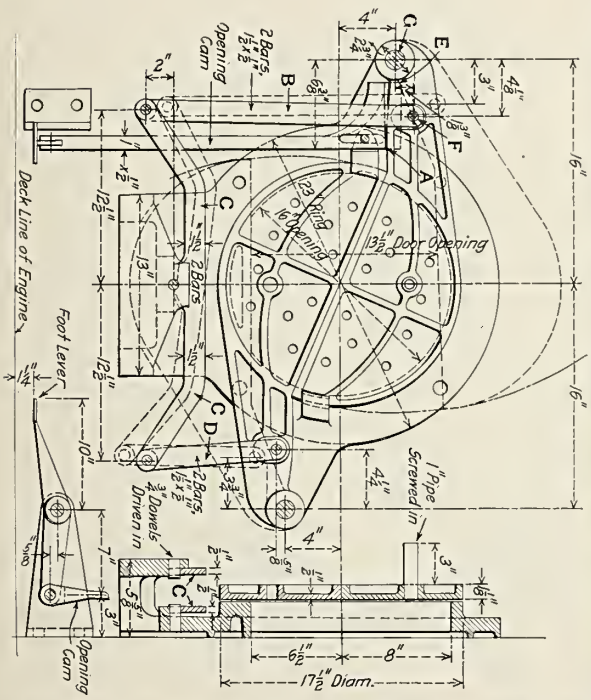

Fig. 233—Details of Foot-Operated Gravity Fire Door, the Two Halves of Which Are So Arranged as to Counterbalance Each Other, Thus Making Unnecessary the Employment of a Power Cylinder; Denver & Rio Grande.

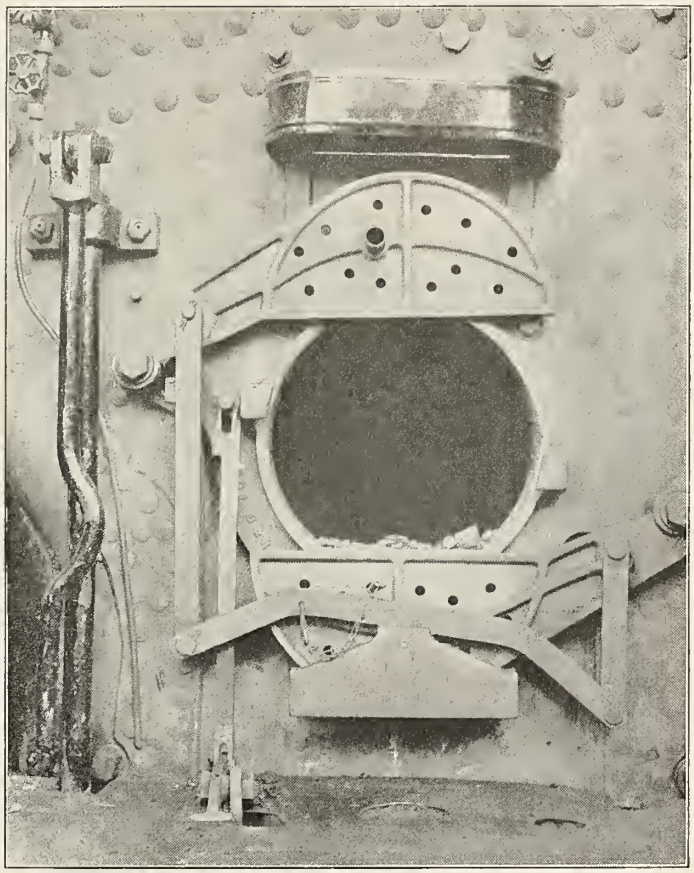

Fig. 234—Gravity Fire Door Locked in Open Position.

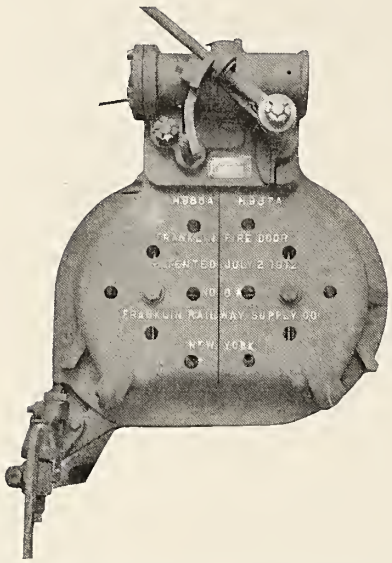

Fig. 235—Franklin Pneumatically Operated Fire Door No. 8A.

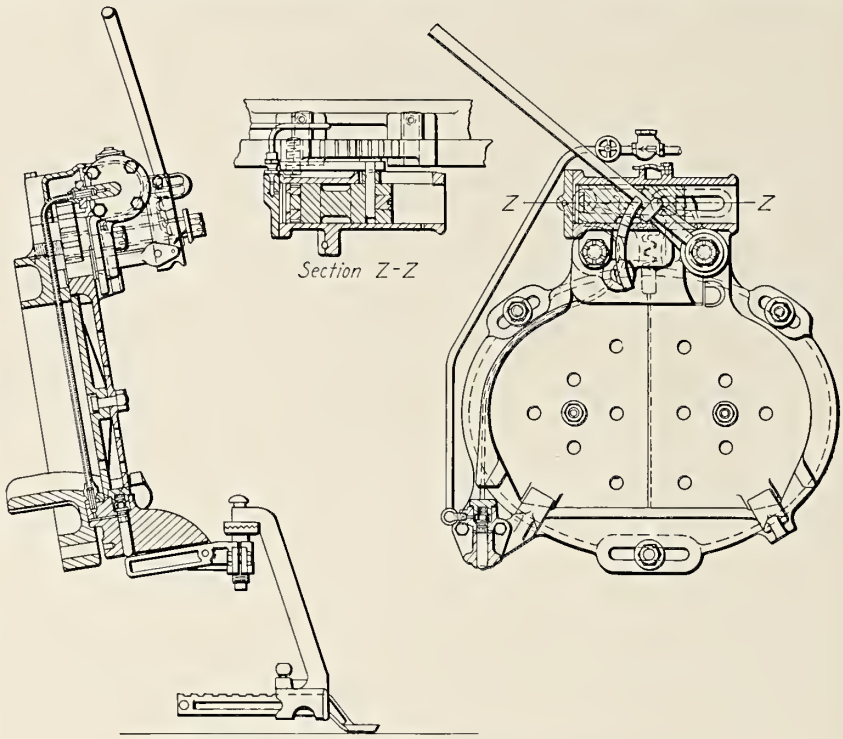

Fig. 236—Details of Franklin Pneumatically Operated Fire Door No. 8A.

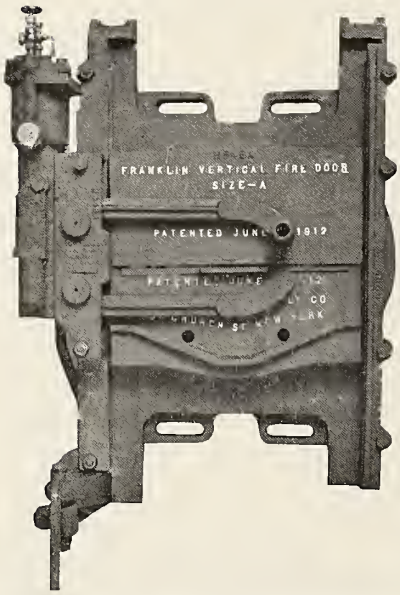

Fig. 237—Franklin Pneumatically Operated Vertical Fire Door.

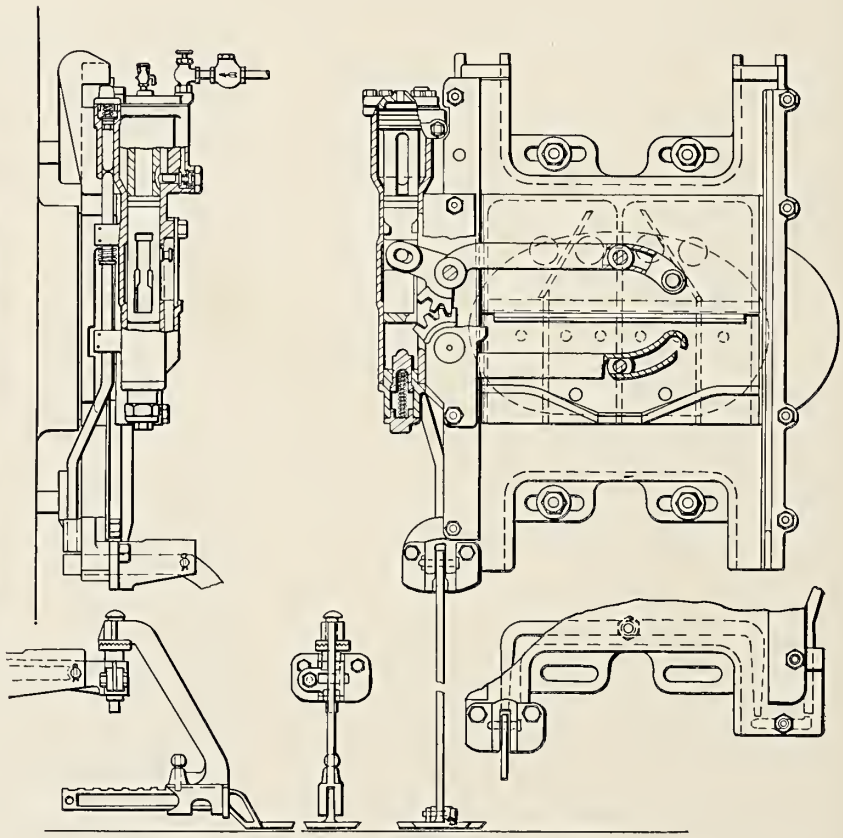

Fig. 238—Details of Franklin Pneumatically Operated Vertical Fire Door.

The Franklin Railway Supply Company.

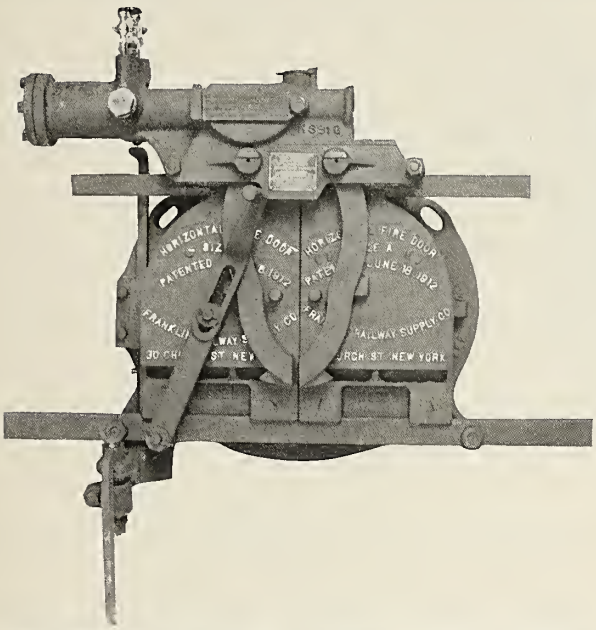

Fig. 239—Pneumatically Operated Horizontal Fire Door; Franklin Railway Supply Company.

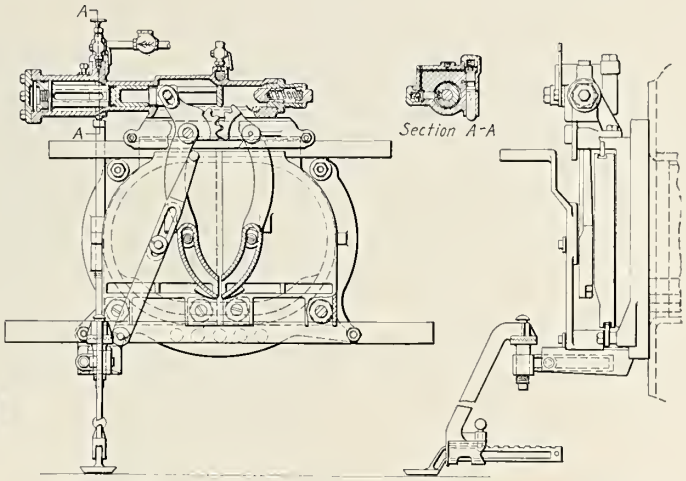

Fig. 240—Details of Pneumatically Operated Horizontal Fire Door; Franklin Railway Supply Company.

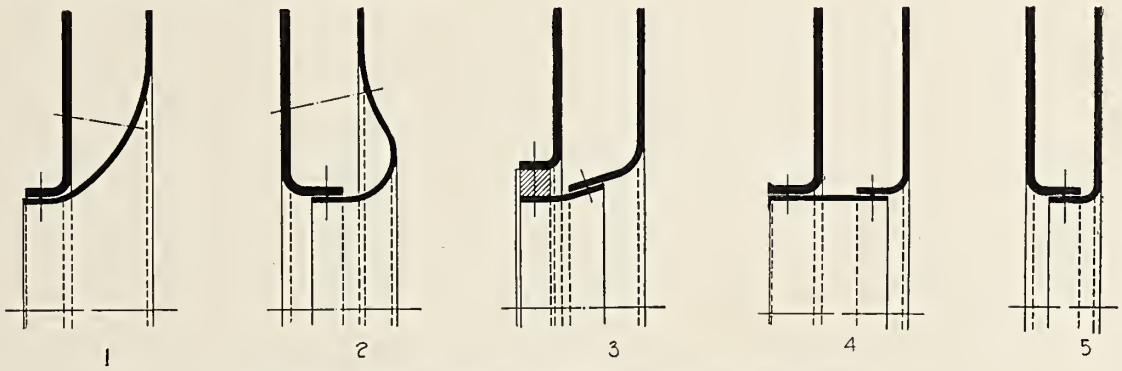

Fig. 241—Various Styles of Fire Door Hole Construction.

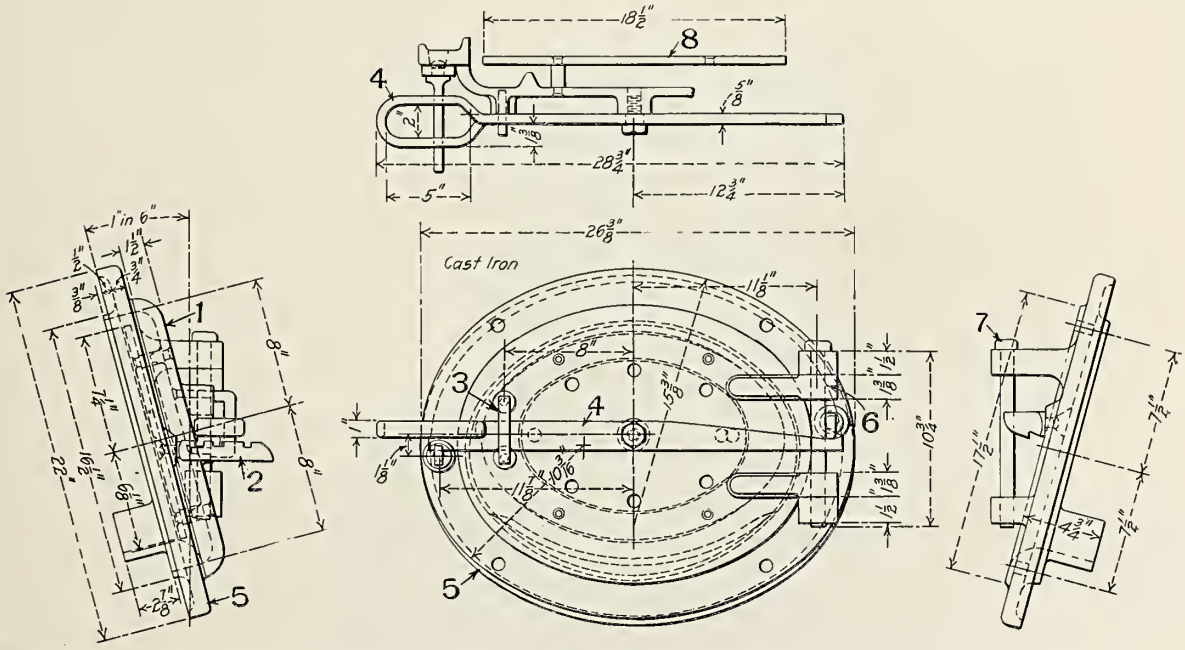

Fig. 242—Swinging Fire Door, 16 in. x 20 in., for Sloping Back Head; Baldwin Locomotive Works.

Numbers Refer to Names of Parts on Page 268.

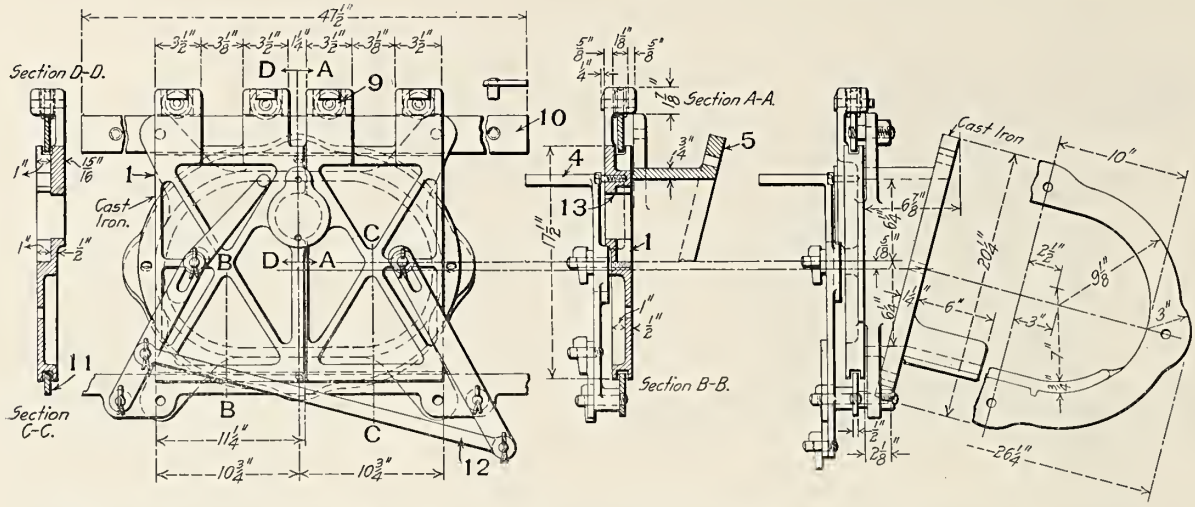

Fig. 243—Horizontal Rolling Fire Door for Sloping Back Head; American Locomotive Company.

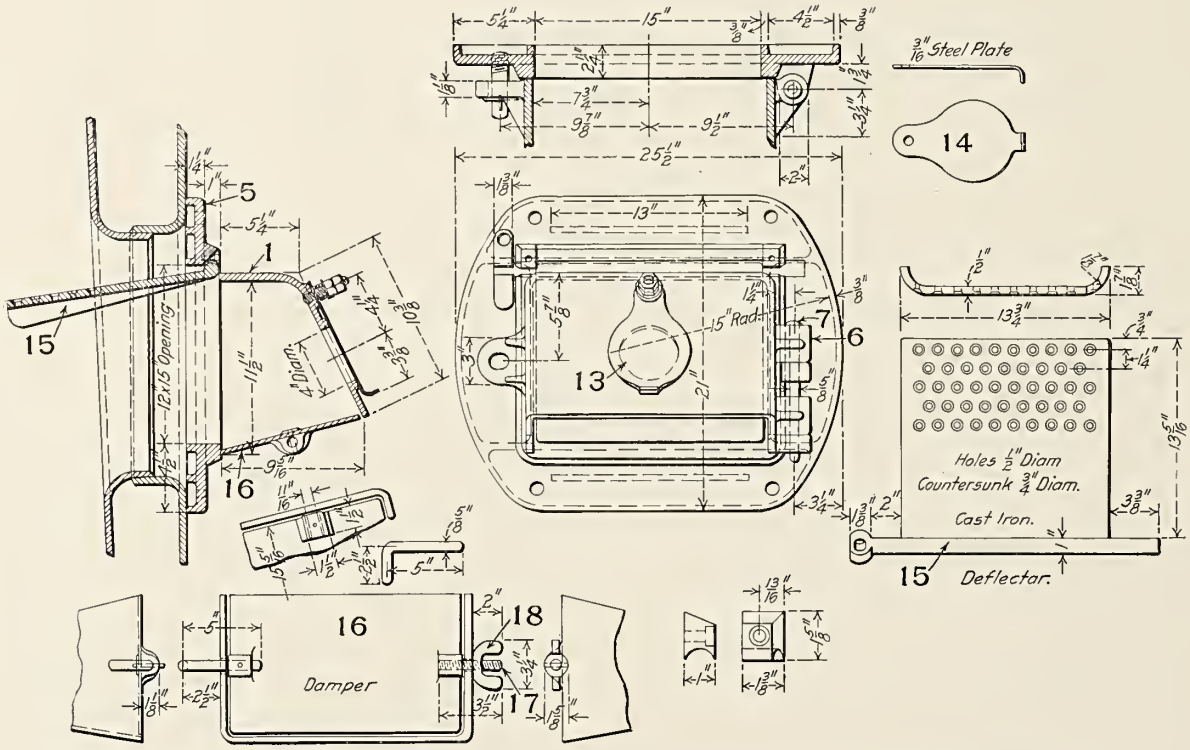

Fig. 244—Standard Fire Door for Oil Burning Locomotives; Southern Pacific.

Names of Parts of Fire Doors, Figs. 242-244.

1 *Door*
2 *Door Latch*
3 *Door Handle Guide*
4 *Door Handle*
5 *Door Frame*
6 *Hinge*
7 *Hinge Pin*
8 *Door Shield*
9 *Door Roller*
10 *Top Door Guide or Track*
11 *Bottom Door Guide*
12 *Handle Connecting Rod*
13 *Peek Hole*
14 *Peek Hole Cover*
15 *Deflector*
16 *Damper*
17 *Damper Adjusting Screw*
18 *Damper Adjusting Screw Thumb Nut*

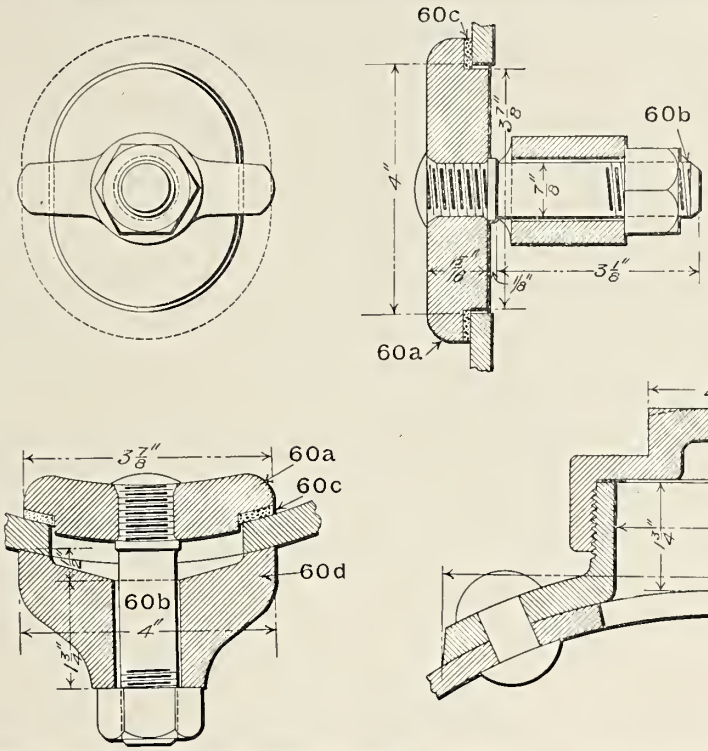

Names of Parts of Fig. 245.

60*a* *Handhole Plate*
60*b* *Handhole Plate Bolt*
60*c* *Handhole Plate Gasket*
60*d* *Handhole Yoke*
60*e* *Handhole Flange Nipple*
60*f* *Handhole Nipple Cap*

Fig. 245—Boiler Washout Handhole Plate. Atlantic Type (4-4-2) Locomotive; Pennsylvania Railroad.

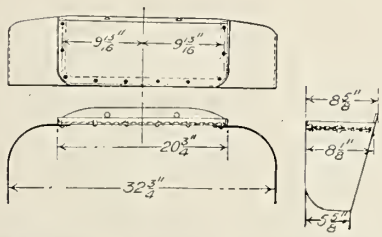

Fig. 246 — Firebox Door Hood; Pennsylvania Railroad.

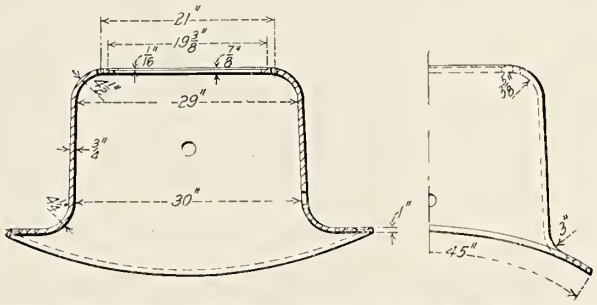

Fig. 247—Pressed Steel Dome for Pacific Type (4-6-2) Locomotive. Built for the Nashville, Chattanooga & St. Louis by the Baldwin Locomotive Works.

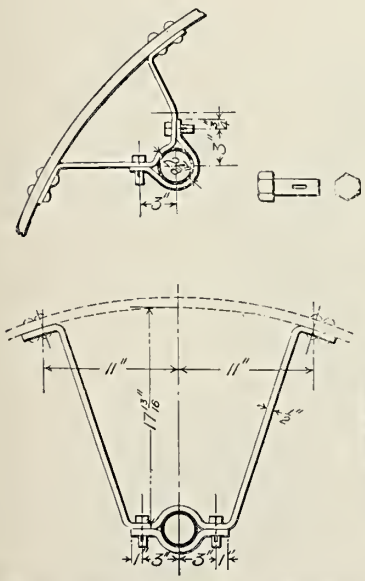

Fig. 248 — Injector Delivery Pipe Hanger.

Fig. 249—One-Piece Pressed Steel Dome; Baldwin Locomotive Works.

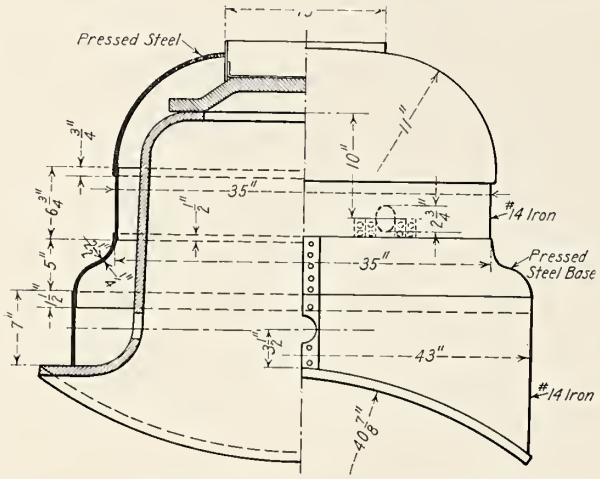

Fig. 250—Dome Casing with Pressed Steel Top and Base; Baldwin Locomotive Works.

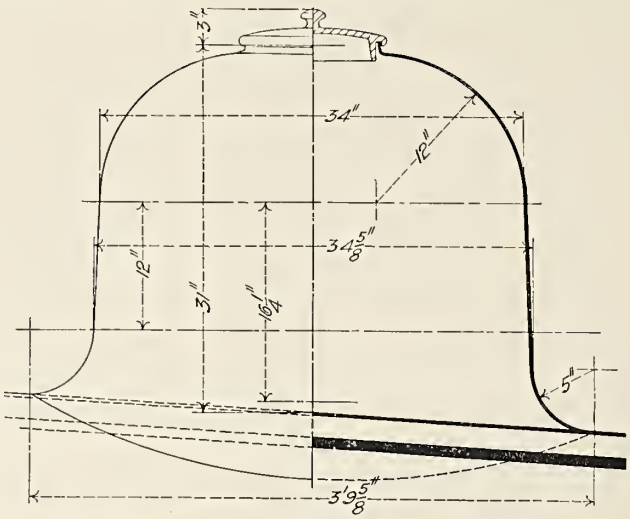

Fig. 251—Pressed Steel Sandbox Casing; Pennsylvania Railroad.

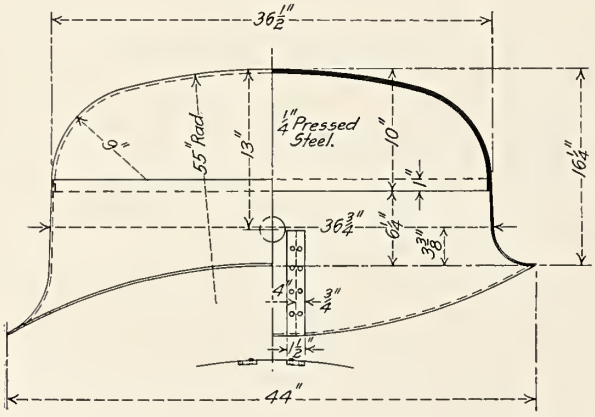

Fig. 252—Dome Casing with Pressed Steel Top; Baldwin Locomotive Works.

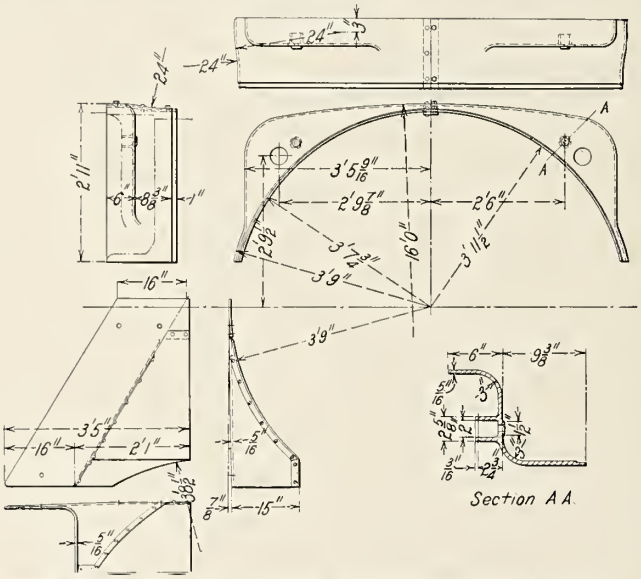

Fig. 253—Hip Joint Casing for Belpaire Firebox for Class E-6 Atlantic Type (4-4-2) Locomotive; Pennsylvania Railroad.

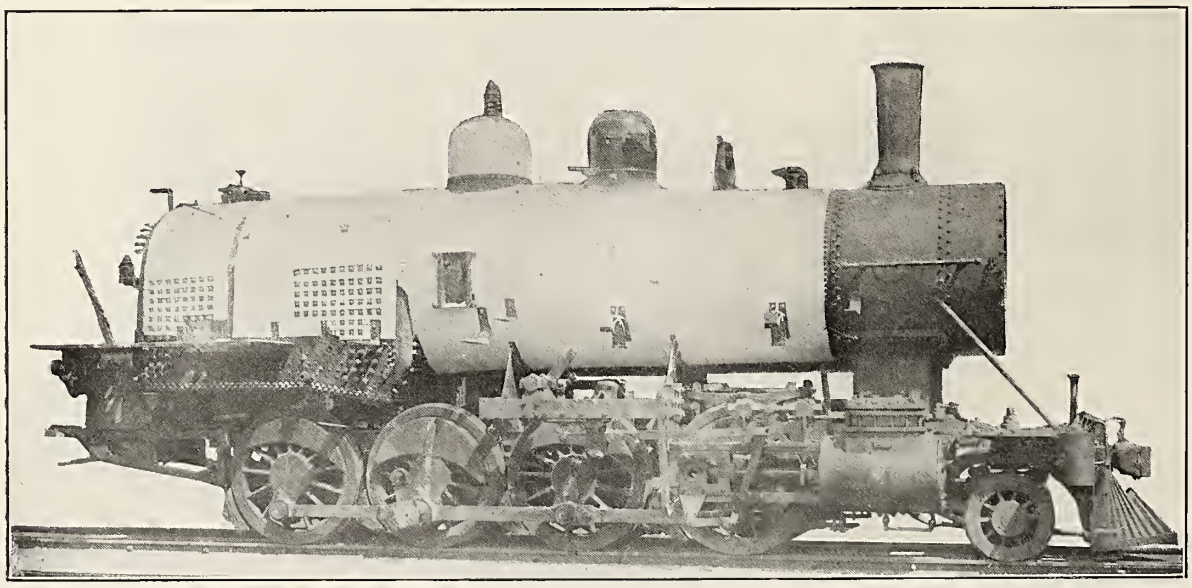

Fig. 254—Application of Magnesia Boiler Lagging; Ehret Magnesia Manufacturing Company.

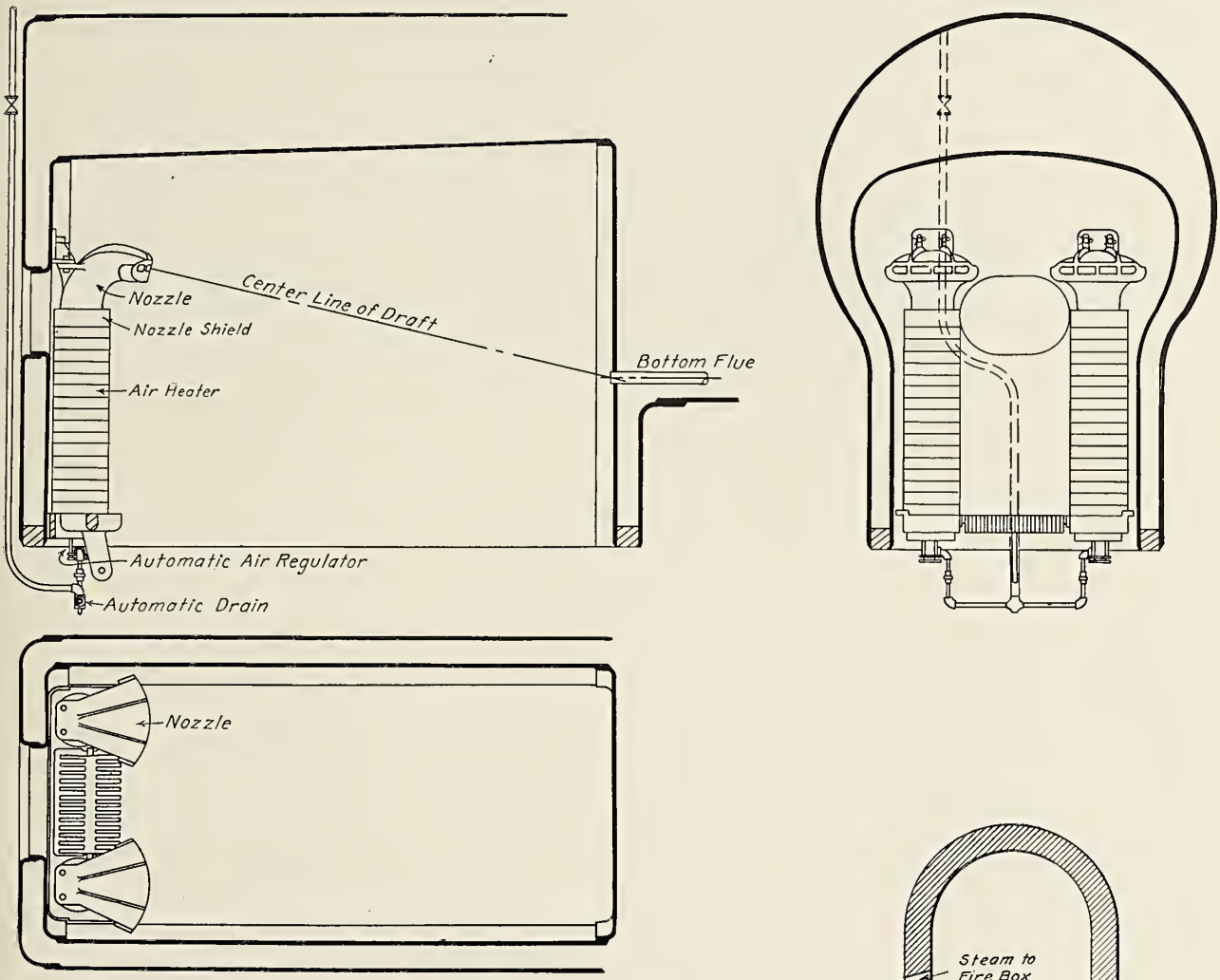

Fig. 255—Parsons System of Combustion; Delaware Railway Specialty Company.

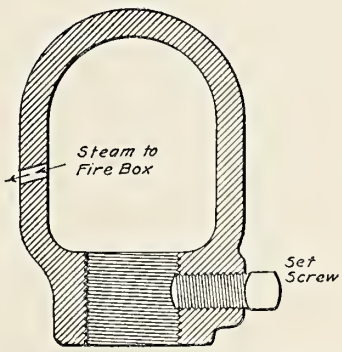

Fig. 256—Steam Jet Head; Boyce Fuel Economizer.

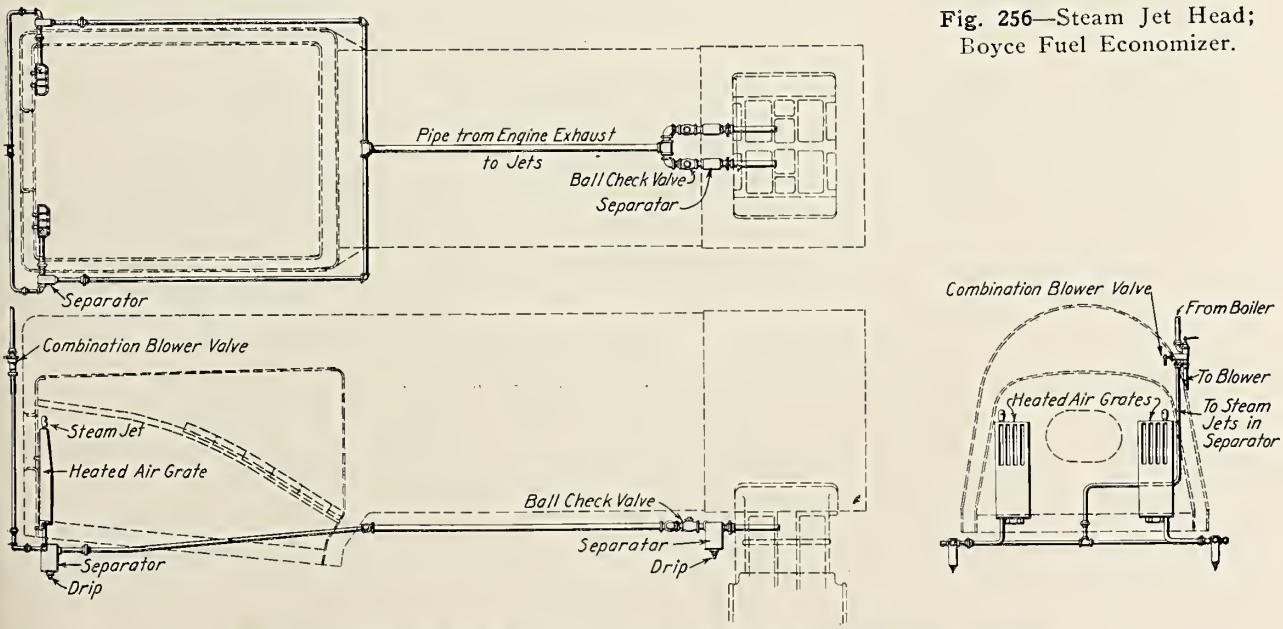

Fig. 257—Boyce Fuel Economizer; Boyce Fuel Economizer Company.

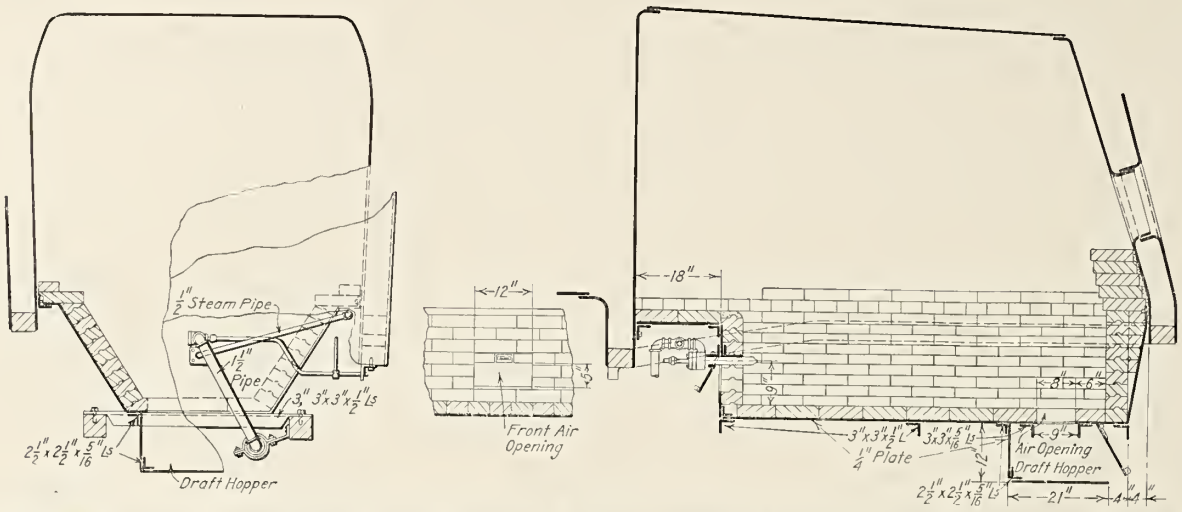

Fig. 258—General Arrangement of the Vraalstad & Doyle Furnace for Oil Burning Locomotives; Aetna Combustion Company.

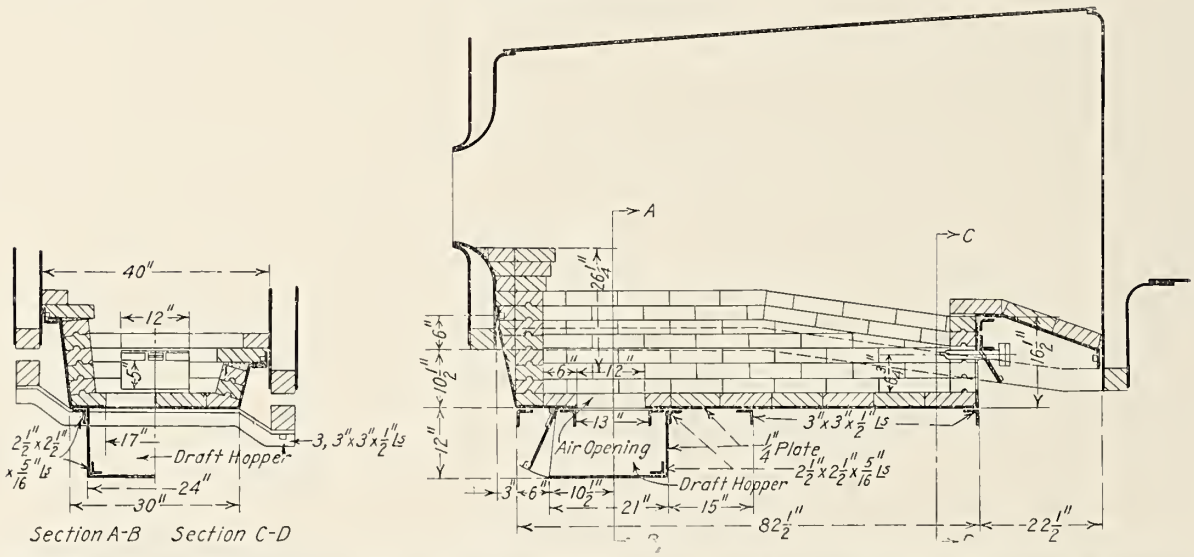

Fig. 259—General Arrangement of the Vraalstad & Doyle Furnace as Applied by the Chicago, Burlington & Quincy on Narrow Firebox Locomotives; Aetna Combustion Company.

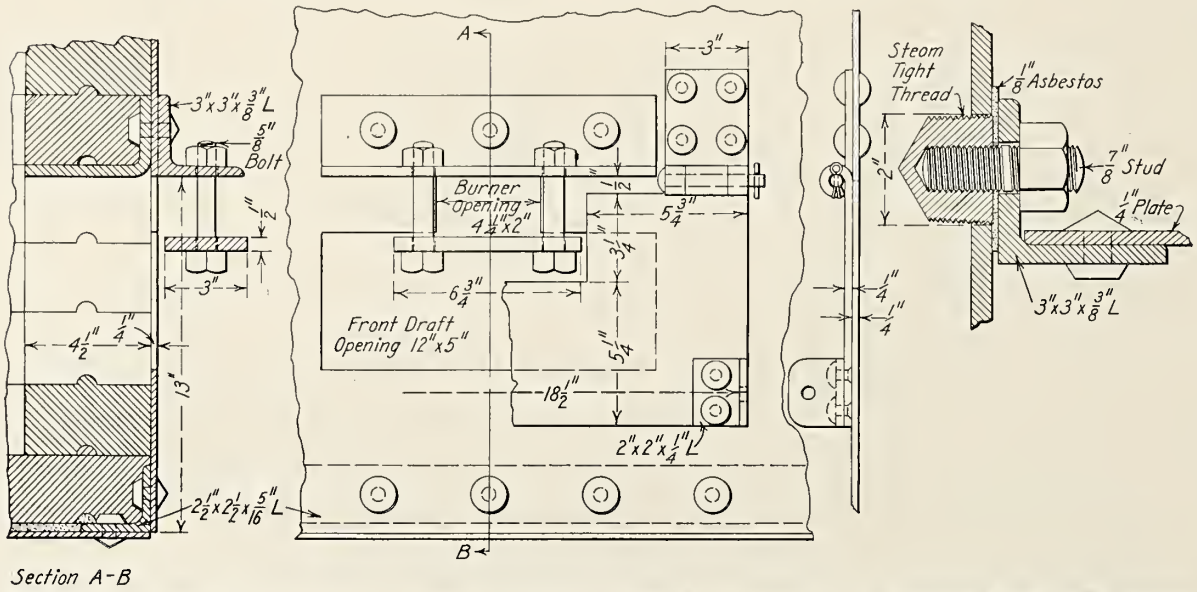

Fig. 260—Details of Burner Clamp, Draft Opening and Stud and Bushing for Hanging Draft Pan; Aetna Combustion Company.

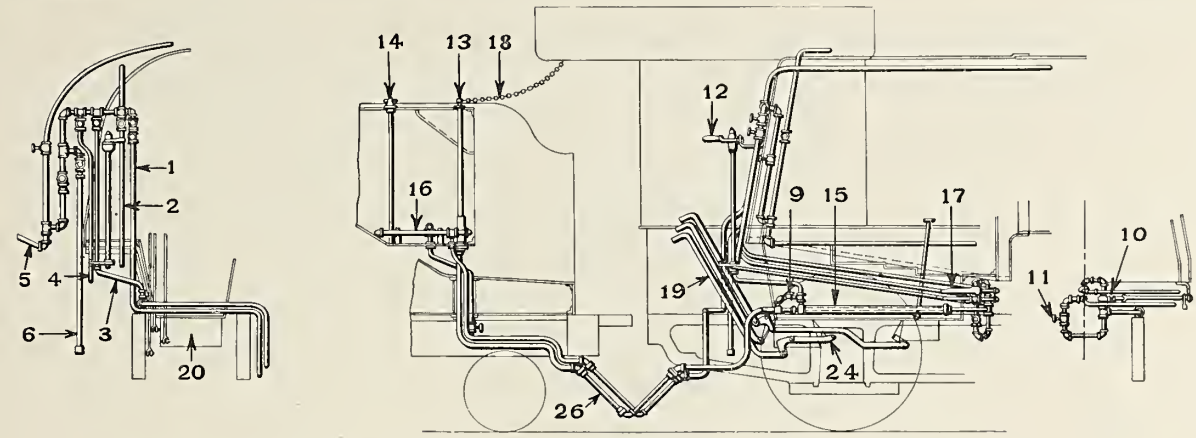

Fig. 261—General Arrangement of Piping for Oil Burner; Delaware & Hudson.

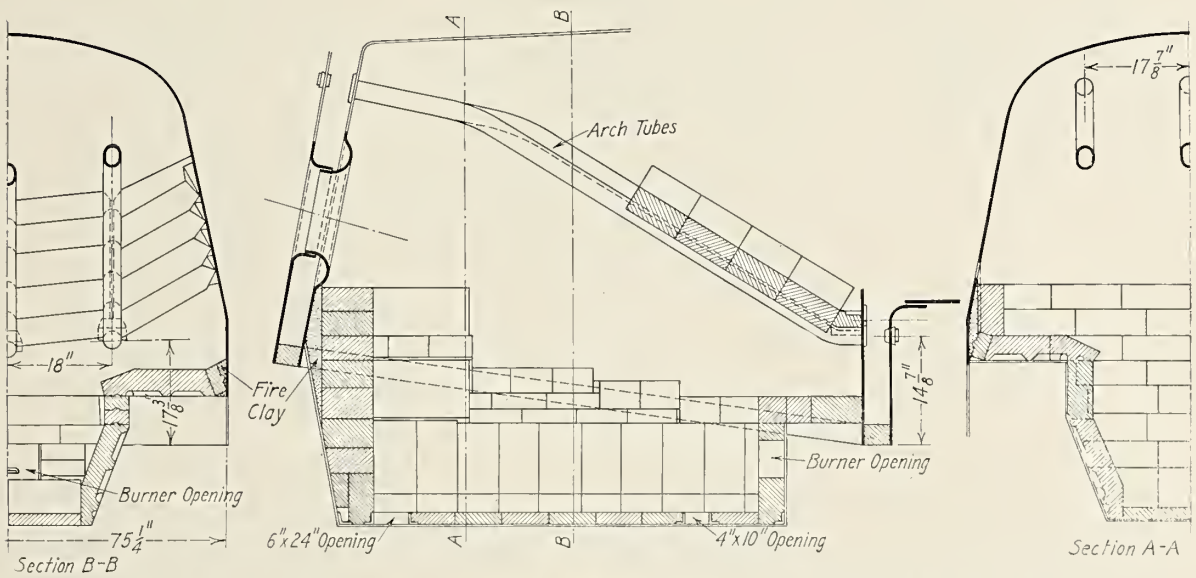

Fig. 262—General Arrangement of Fire Brick and Draft Pan for Oil Burning Locomotive; Delaware & Hudson.

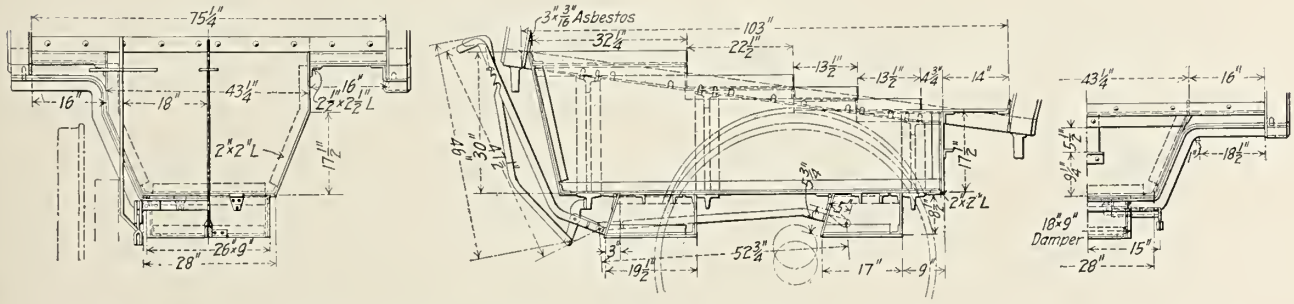

Fig. 263—Draft Pan and Damper Rigging for Consolidation (2-8-0) Locomotive. Built for the Delaware & Hudson by the American Locomotive Company.

Names of Parts of Oil Burning Apparatus, Fig. 261.

1 *Steam Pipe to Tank Oil Heater*
2 *Steam Pipe to Atomizer*
3 *Steam Pipe to Engine Oil Heater*
4 *Steam Pipe to Pilot Light Burner*
5 *Steam Pipe to Blower*
6 *Engine House Connection*
9 *Tank Oil Heater Drip Pipe*
10 *Burner Oil Cock*
11 *Pilot Light Oil Cock*
12 *Fireman's Oil Regulator*
13 *Tank Valve*
14 *Measuring Rod*
15 *Engine Oil Heater*
16 *Tank Oil Heater*
17 *Burner*
18 *Safety Chain*
19 *Damper Regulator*
20 *Fire or Draft Pan.*
24 *Damper*
26 *Flexible Conduit*

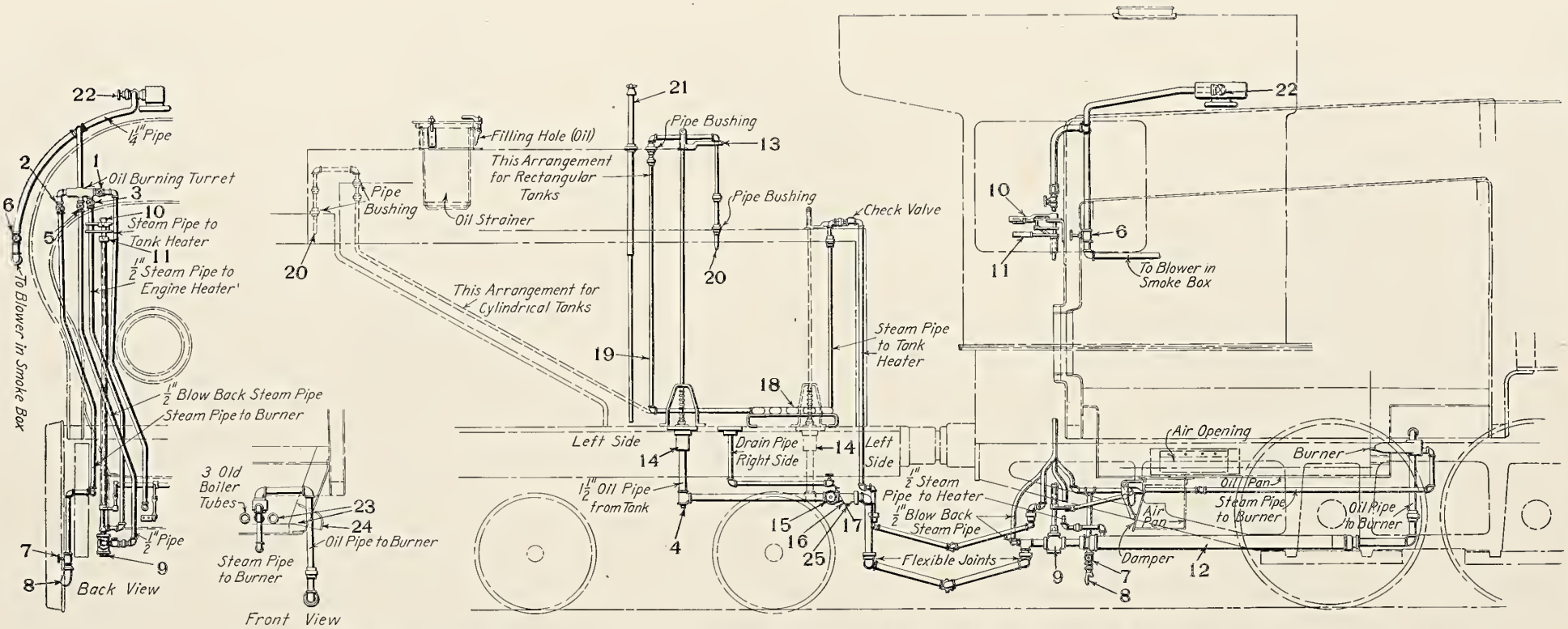

Fig. 264—General Arrangement of Oil Burning Equipment for Kansas City Southern Locomotives.

Names of Parts of Oil Burning Apparatus, Fig. 264.

1 *Valve Which Controls Steam to Heater in Oil Tank.*

2 *Atomizer Which Controls Steam to Burner.*

3 *Valve Which Controls Steam to Heater on Engine.*

4 *Tee Used to Unseat Tank Valve When Stuck.*

5 *Valve to Blow Out Burner When Clogged Up.*

6 *Valve Which Controls the Blower When Engine Is Working Under Its Own Steam.*

7 *Valve Which Controls the Steam for Blower When Engine Is Being Fired Up in Round House.*

8 *Coupling to Be Connected with Round House Steam Line When Dead Engine Is Being Fired Up.*

9 *Valve Which Controls Flow of Oil to Burner.*

10 *Quadrant Which Regulates and Controls Oil Valve No. 9.*

11 *Quadrant Which Regulates and Controls Draft Through Air Pans.*

12 *Oil Heater Used to Superheat the Oil Before It Enters the Burner.*

13 *Bell Crank Handle for Operating Tank Oil Valve.*

14 *Valve Which Controls Supply of Oil from Oil Tank to Engine.*

15 *Emergency Valve for Shutting Off Oil Supply in Case of Failure of Oil Pipe Line.*

16 *Strainer for Straining Oil from Oil Tank.*

17 *Valve Used to Drain Oil in Tank.*

18 *Oil Heater Used to Heat the Oil in Oil Tank.*

19 *Steam Exhaust Pipe from Tank Heater to Water Tank.*

20 *Steam Exhaust Pipe Nozzle.*

21 *Rod Used to Measure the Number of Gallons of Oil in Tank.*

22 *Valve Which Controls Steam to Blower and Oil Burning Turret.*

23 *Air Opening for Admitting Air Into Oil Pan.*

24 *Fire Hood for Preventing Flame Blowing Out of Oil Pan.*

25 *Plug to Be Removed for Cleaning Strainer.*

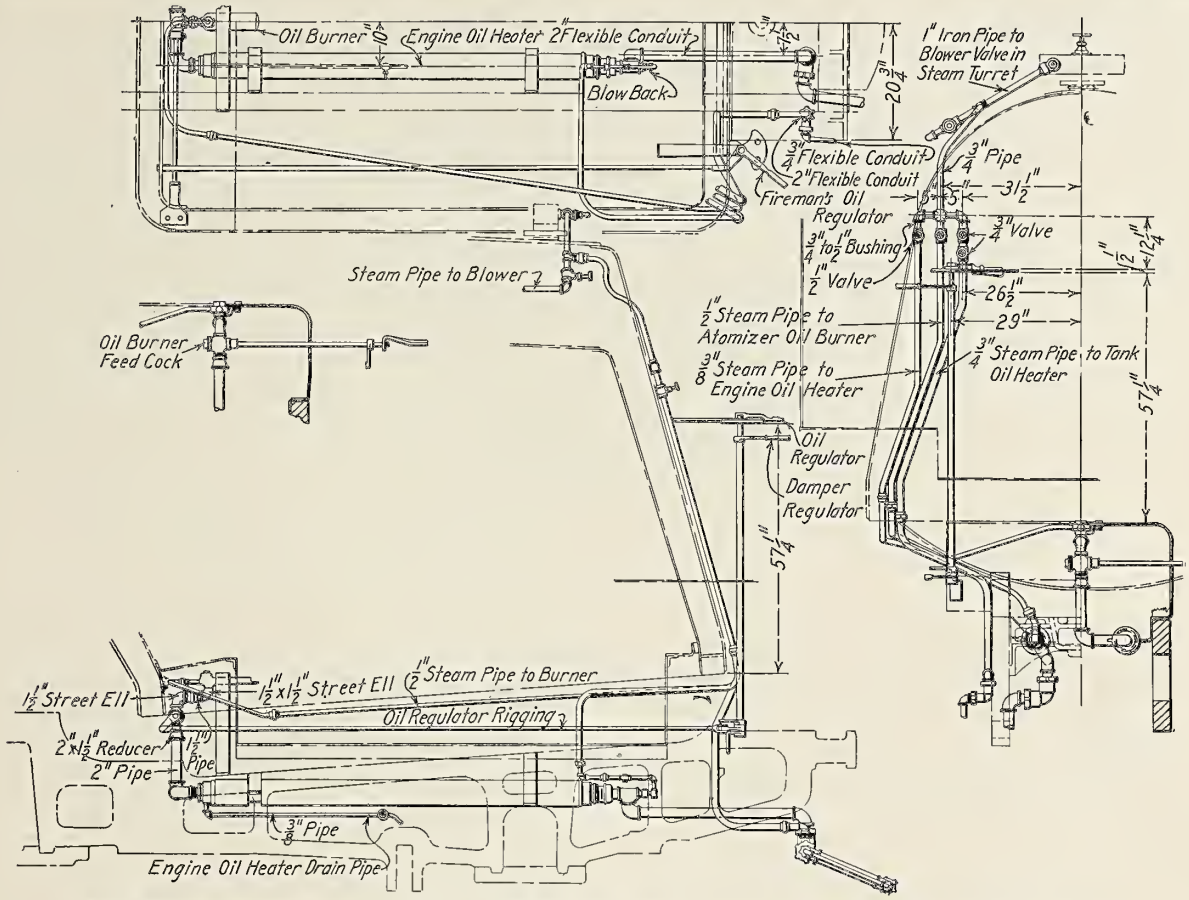

Fig. 265—Standard Arrangement of Piping for Oil Burning Equipment; Southern Pacific.

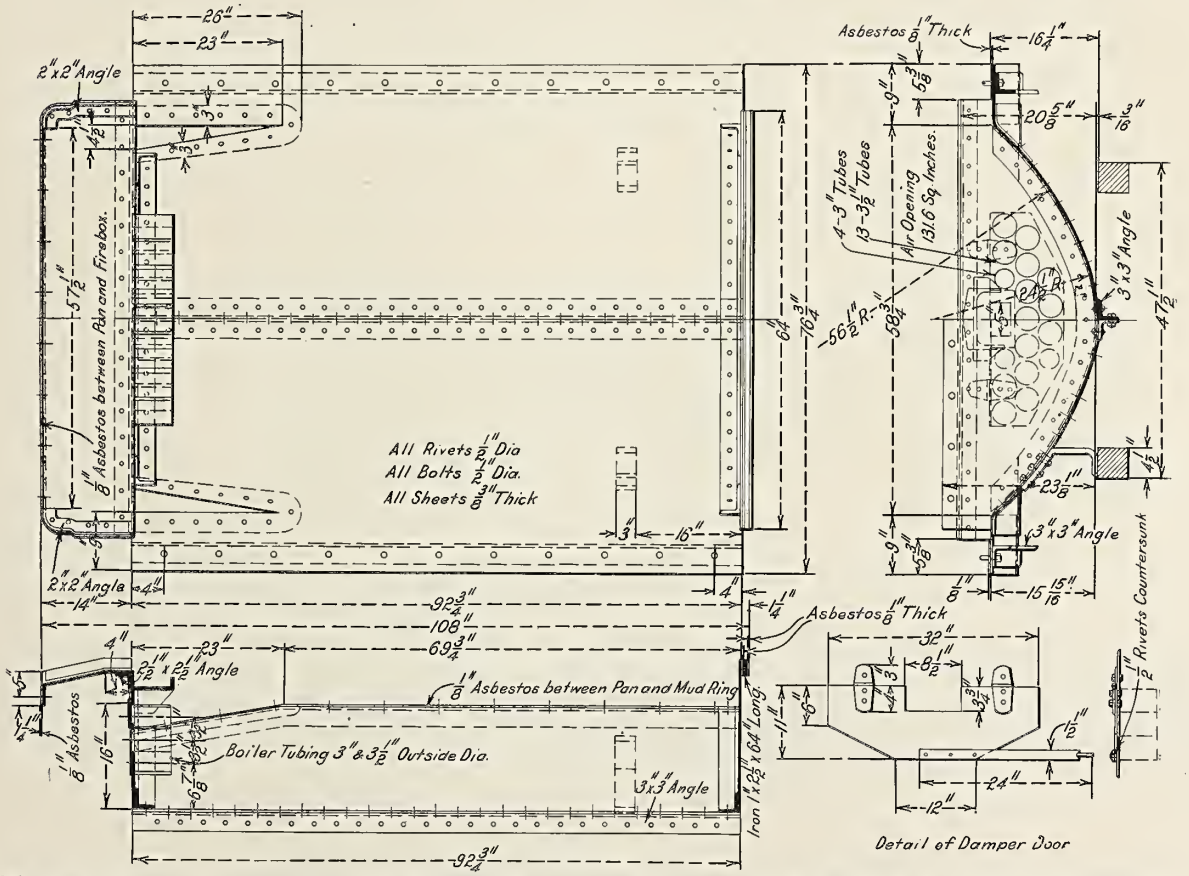

Fig. 266—General Arrangement of Segmental Arc Draft Pan for Oil Burning Locomotive; Southern Pacific.

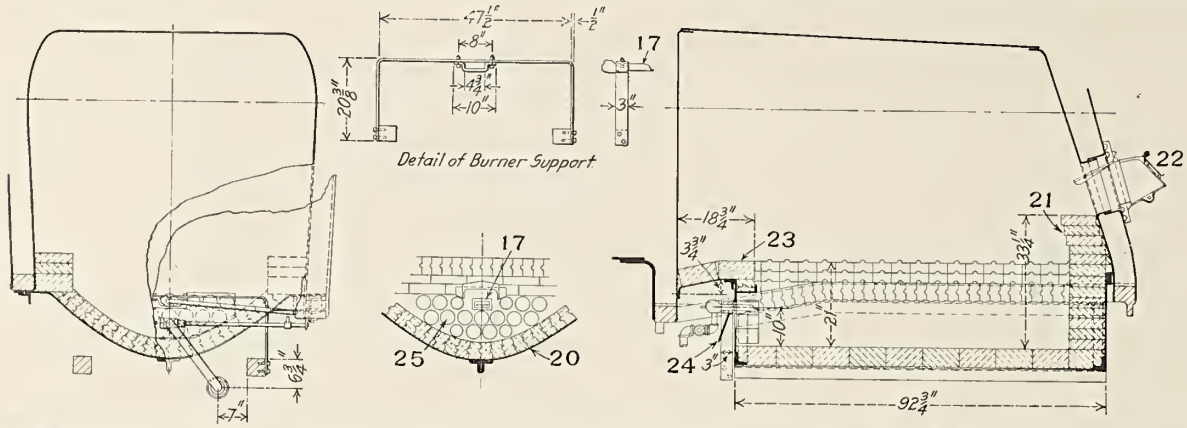

Fig. 267—General Arrangement of Oil Burning Firebox with Segmental Arc Draft Pan for Oil Burning Locomotive; Southern Pacific.

(For detail of fire door see Fig. 244.)

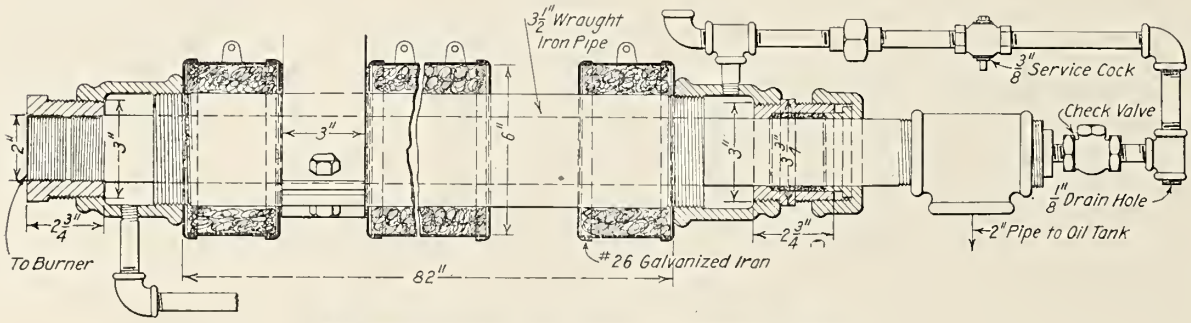

Fig. 268—Engine Oil Heater; Southern Pacific.

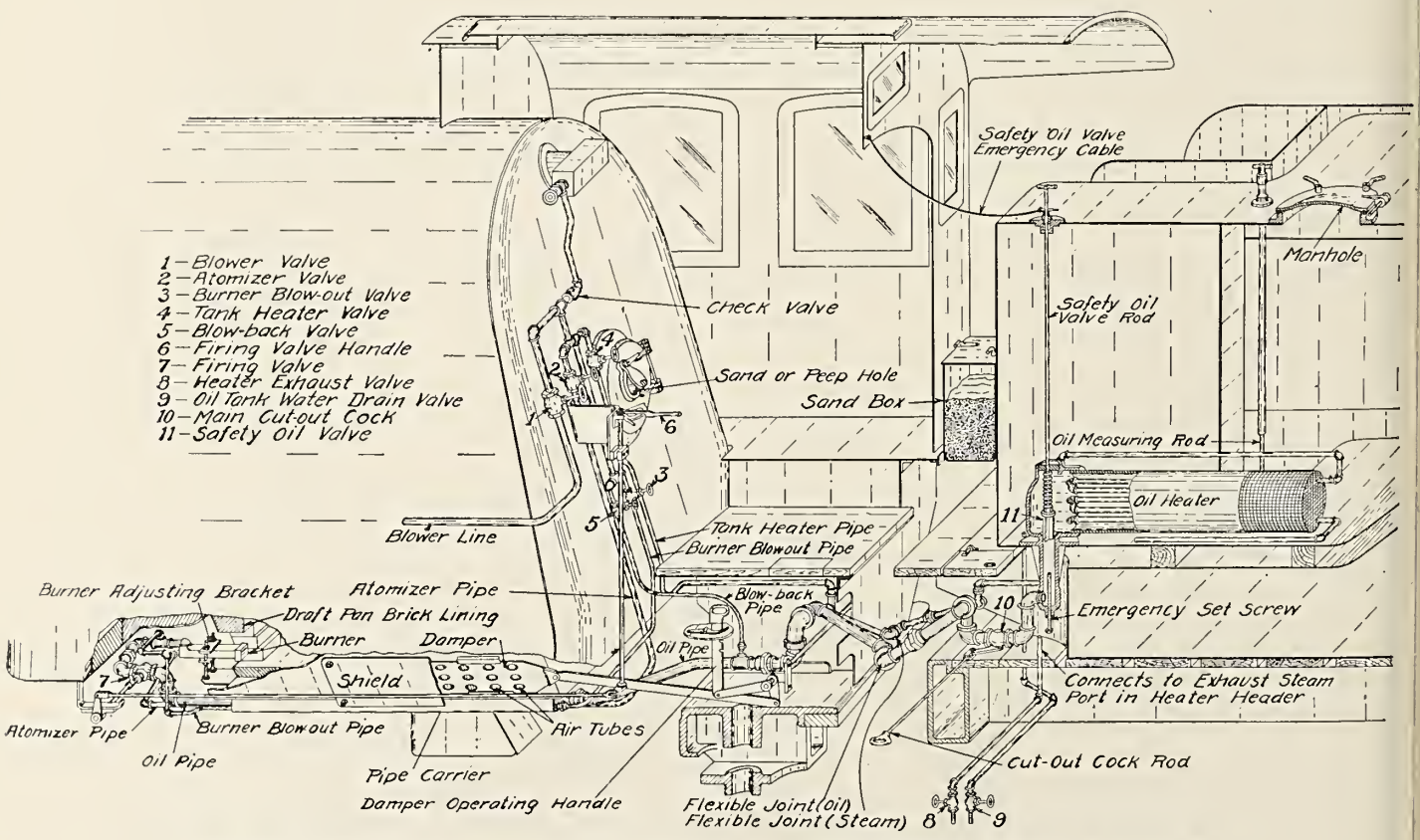

Fig. 269—Standard Arrangement of Oil-Burning Apparatus; Atchison, Topeka & Santa Fe.

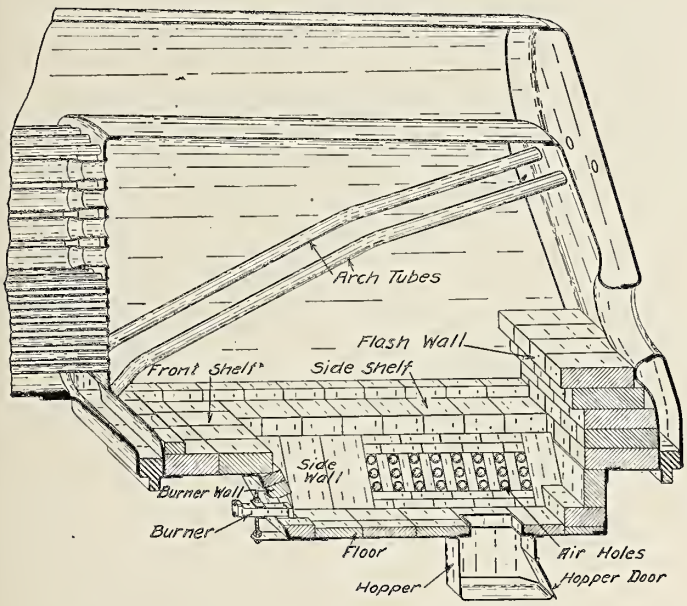

Fig. 270—Front End Burner Furnace; Atchison, Topeka & Santa Fe.

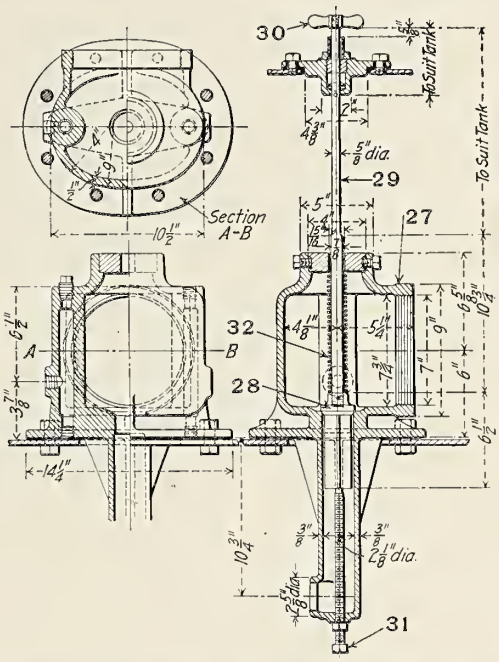

Fig. 271—Combined Oil Tank Valve and Heater Head, Atchison, Topeka & Santa Fe.

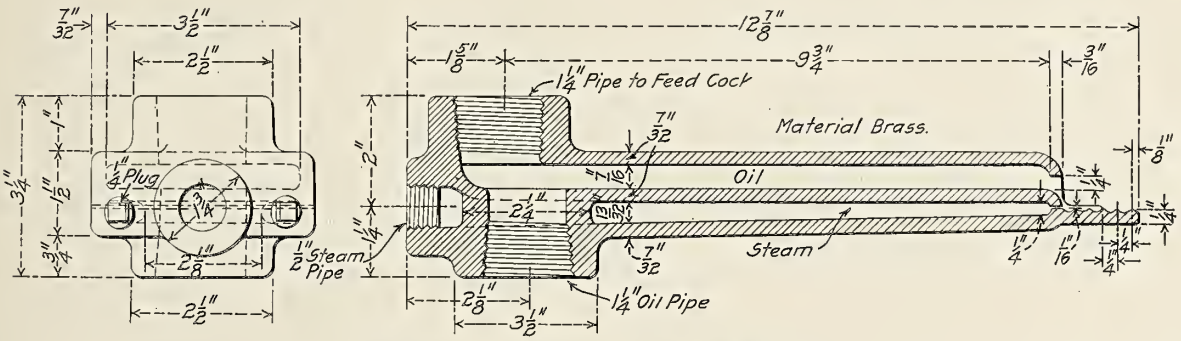

Fig. 272—Von Boden-Ingles Oil Burner.

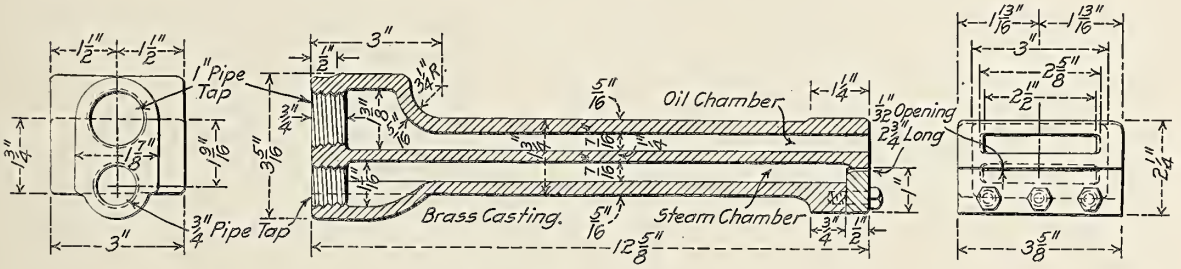

Fig. 273—Booth Oil Burner.

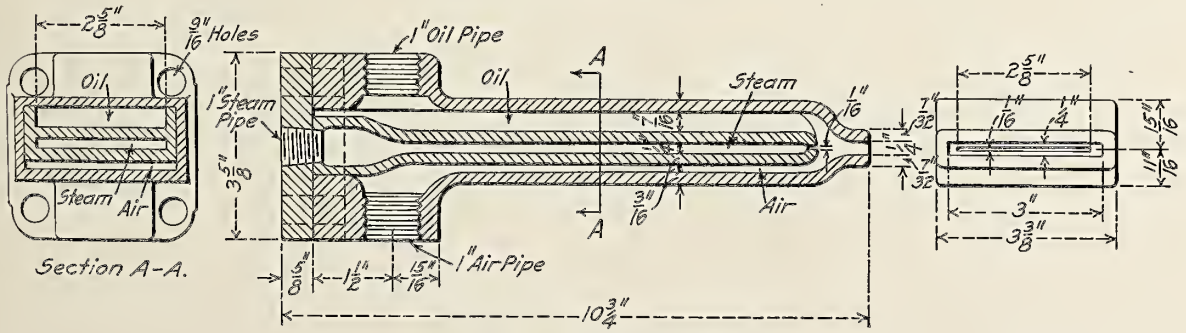

Fig. 274—Sheedy Oil Burner.

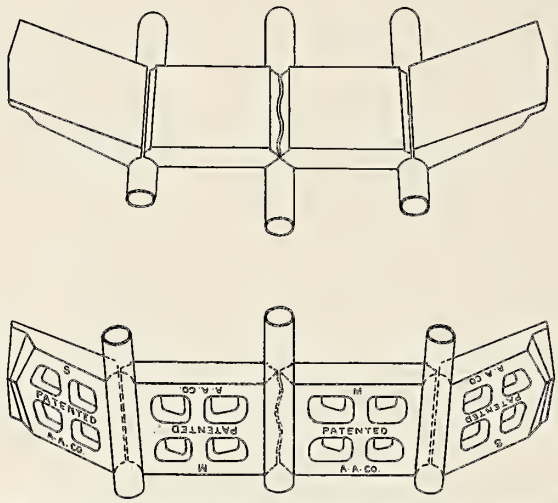

Fig. 275—Security Sectional Brick Units; American Arch Company.

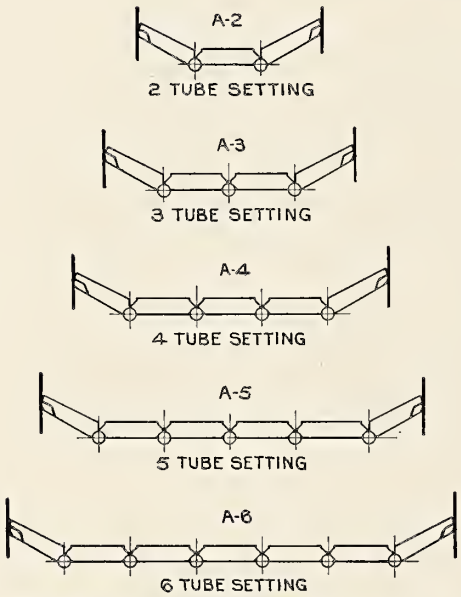

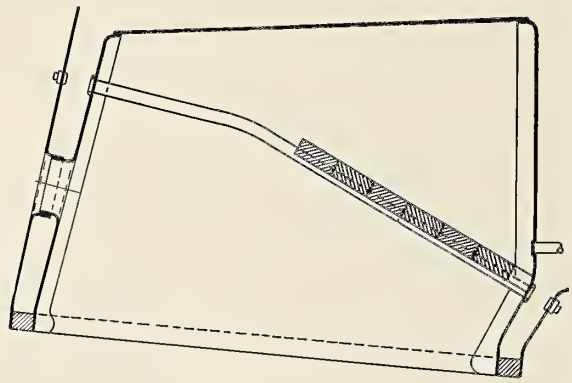

Fig. 276—Security Sectional Arch Showing Arrangement for Various Widths of Fireboxes and Moderate Spacing of Arch Tubes; American Arch Company.

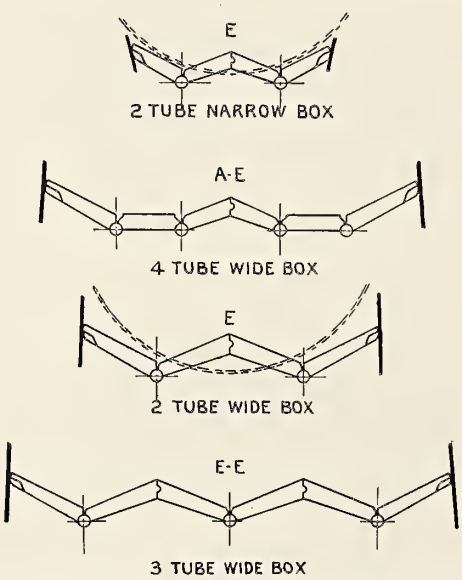

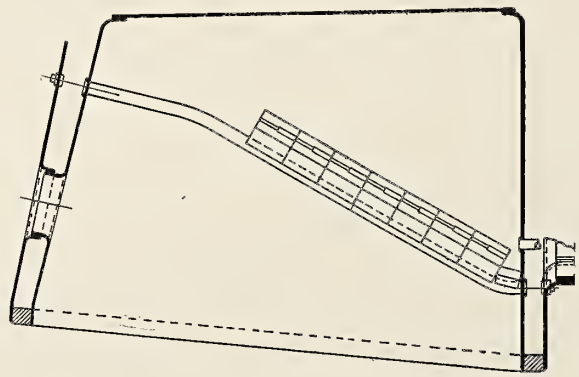

Fig. 277—Security Sectional Arch Showing Arrangement for Various Widths of Fireboxes and Extreme Spacing of Arch Tubes; American Arch Company.

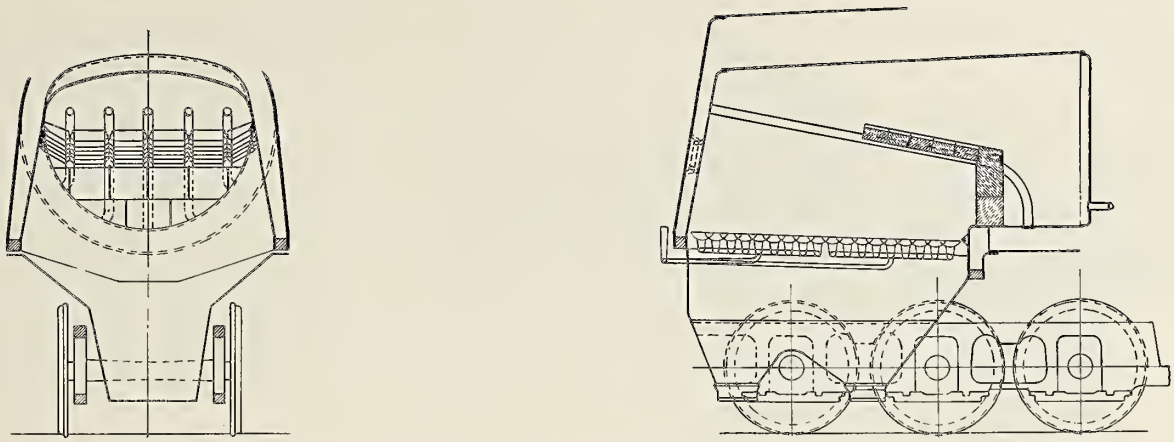

Fig. 278—Combination Security Arch and Bridge Wall Showing Arch Tube and Brick Arrangement for Barrel Combustion Chamber with Extremely Shallow Throat; American Arch Company.

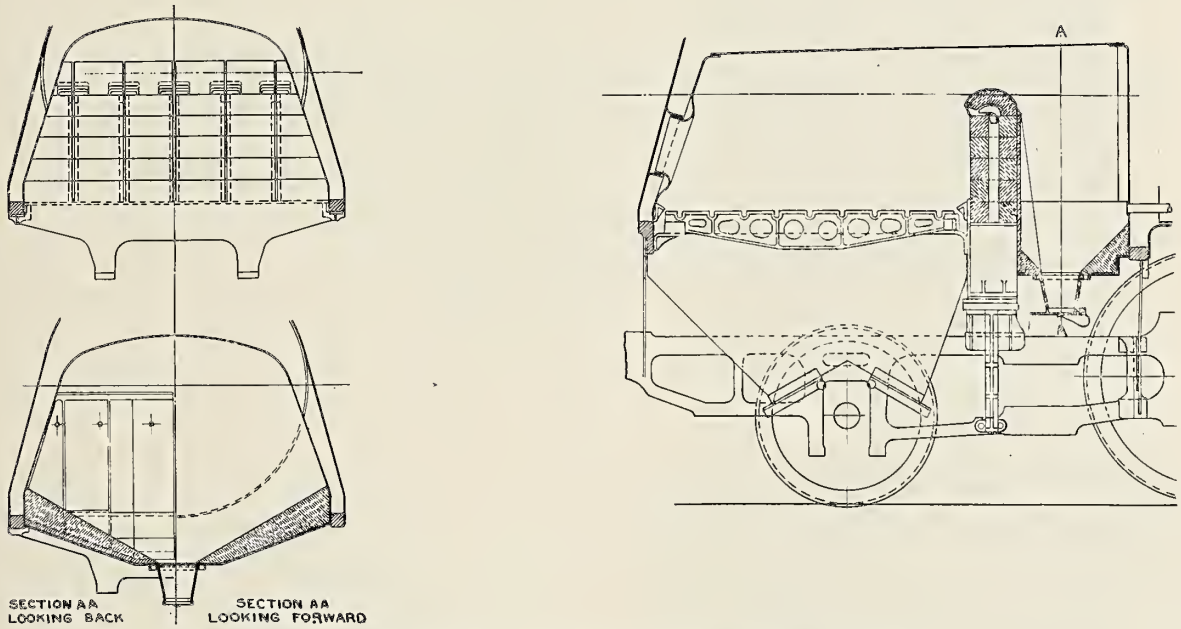

Fig. 279—Gaines Combustion Chamber; American Arch Company.

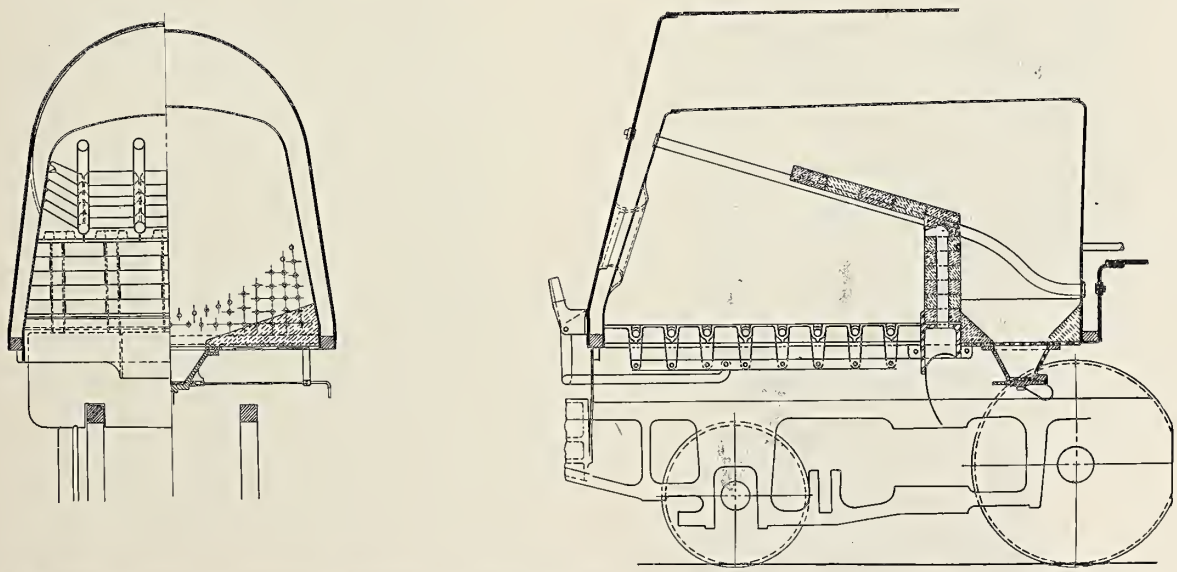

Fig. 280—Gaines Locomotive Furnace, Security Arch and Hollow Wall; American Arch Company.

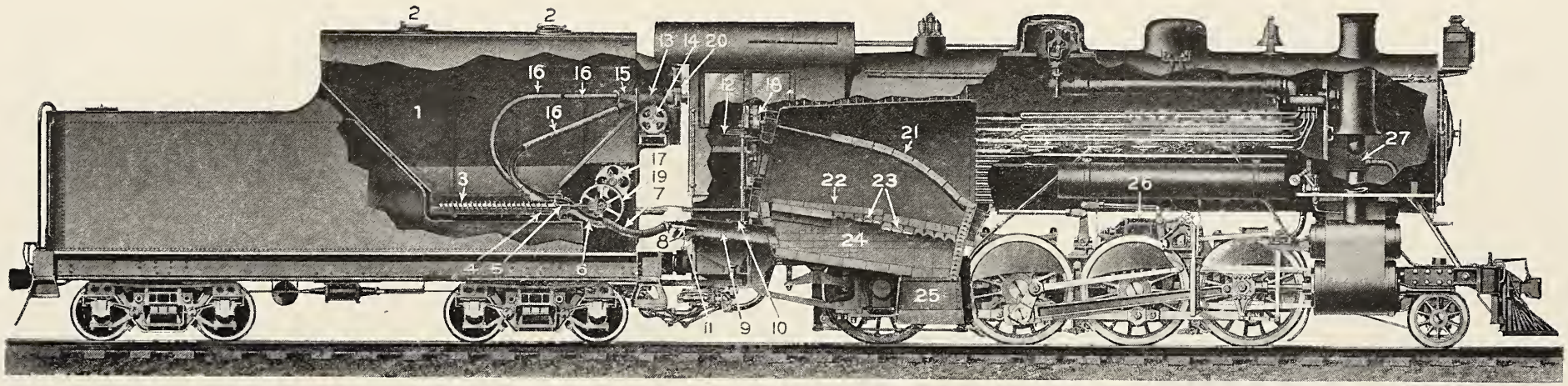

Fig. 281—Arrangement of Delaware & Hudson Consolidation (2-8-0) Locomotive Equipped for Burning Pulverized Fuel; Locomotive Pulverized Fuel Company.

Names of Parts of Pulverized Fuel Burning Equipment, Fig. 281.

1 *Enclosed Fuel Container*

2 *Fuel Supply Inlets and Covers*

3 *Fuel Conveyor*

4 *Fuel and Pressure Air Feeder*

5 *Fuel and Pressure Air Commingler*

6 *Fuel and Pressure Air Outlet*

7 *Fuel and Pressure Air Flexible Conduit*

8 *Fuel and Pressure Air Nozzle*

9 *Fuel and Air Mixer*

10 *Firing up Opening*

11 *Induced Air Inlet Damper*

12 *Control for Induced Air Inlet Damper*

13 *Pressure Blower*

14 *Steam Turbine or Motor for Pressure Blower*

15 *Pressure Blower Manifold*

16 *Pressure Blower Conduits*

17 *Steam Turbine or Motor for Fuel Conveyor, Feeder and Commingler*

18 *Control for Steam Turbine or Motor for Fuel Conveyor, Feeder and Commingler.*

19 *Operating Gear, Shaft and Clutches for Fuel Conveyor, Feeder and Commingler*

20 *Switchboard (when electrical equipment is specified)*

21 *Security Arch*

22 *Primary Arch*

23 *Auxiliary Air Inlets*

24 *Combustion Furnace*

25 *Self-Clearing Air Cooled Slag Pan*

26 *Turbo-Generator (when electrical equipment is specified)*

27 *Combination Engine and Turbo-Generator Exhaust Nozzle and Stack Blower*

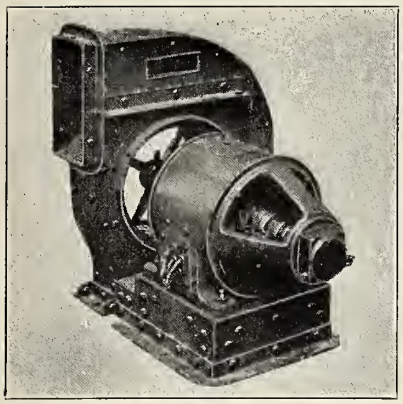

Fig. 282—Pressure Blower with Motor Drive.

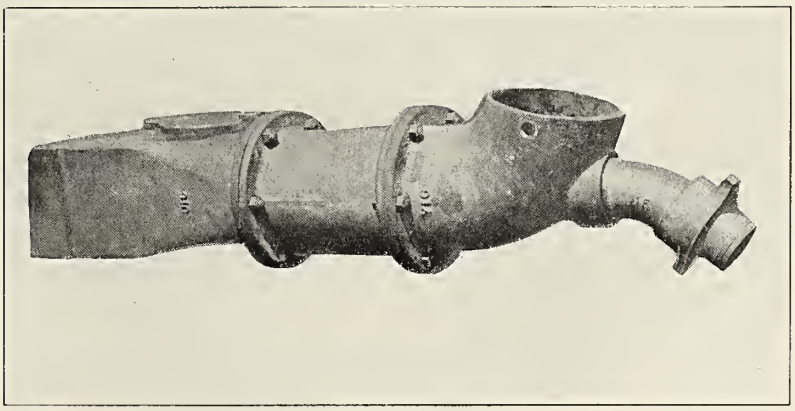

Fig. 283—Fuel and Air Mixer.

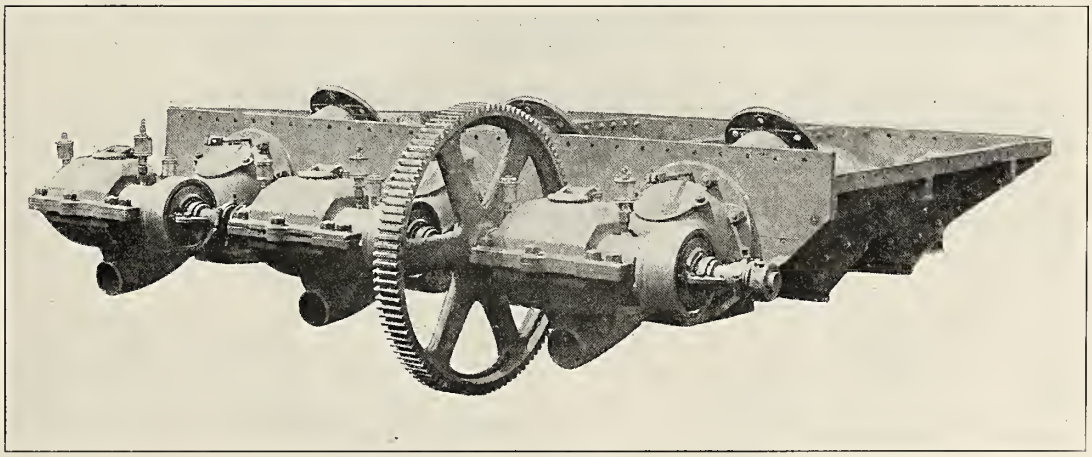

Fig. 284—Fuel Conveyor and Feeder

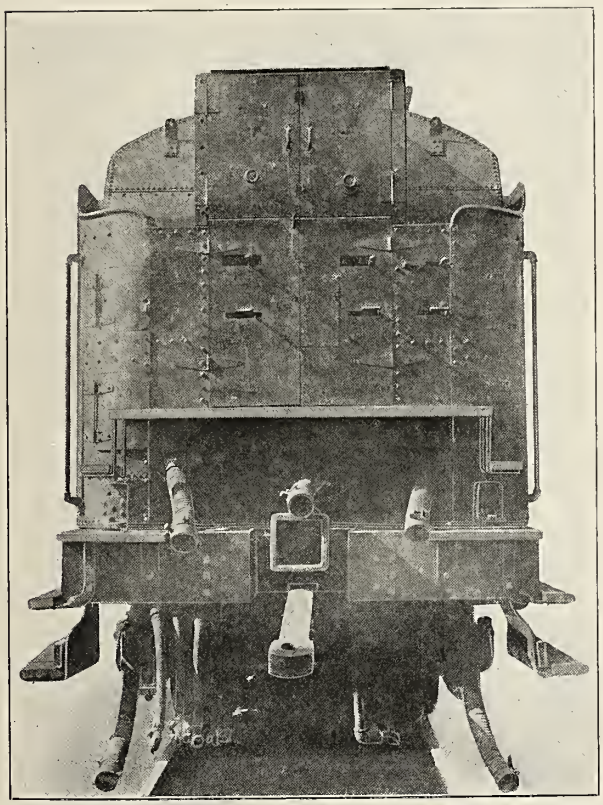

Fig. 285—Front of Tender Showing Flexible Fuel Conduits.

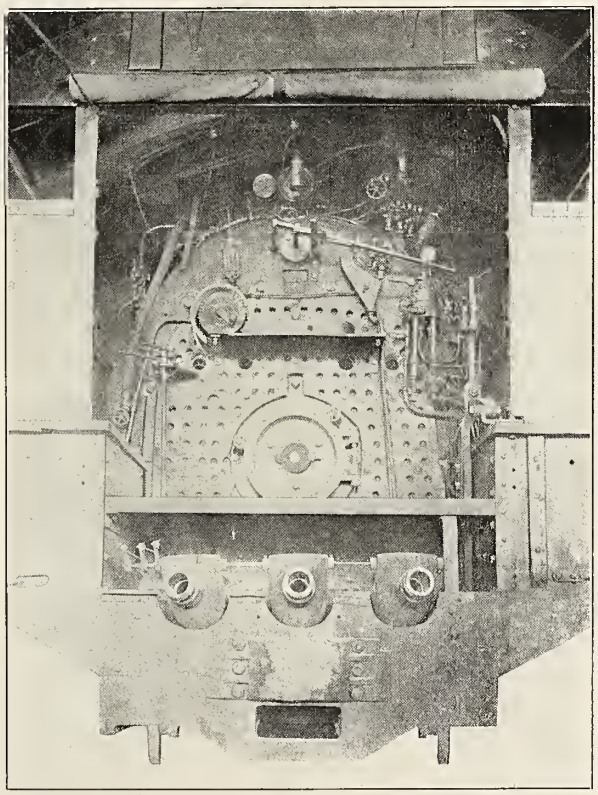

Fig. 286—Rear of Engine Showing Operating Equipment and Fuel and Air Mixers.

Figs. 282-286 are Details of Locomotive Pulverized Fuel Company Equipment shown in Fig. 281.

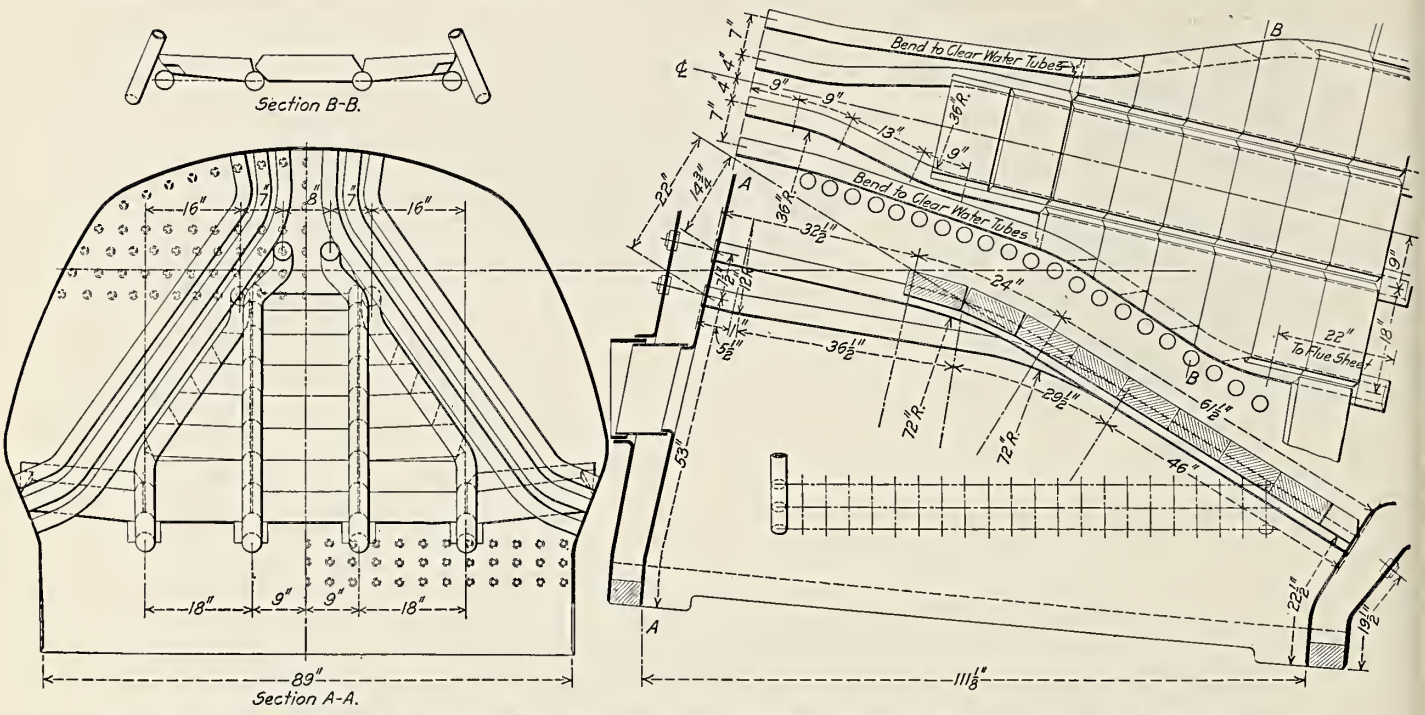

Fig. 287—Arrangement of Brick Arch in Riegel Water Tube Firebox on Pacific Type (4-6-2) Locomotive. Built for the Delaware, Lackawanna & Western by the Lima Locomotive Corporation.

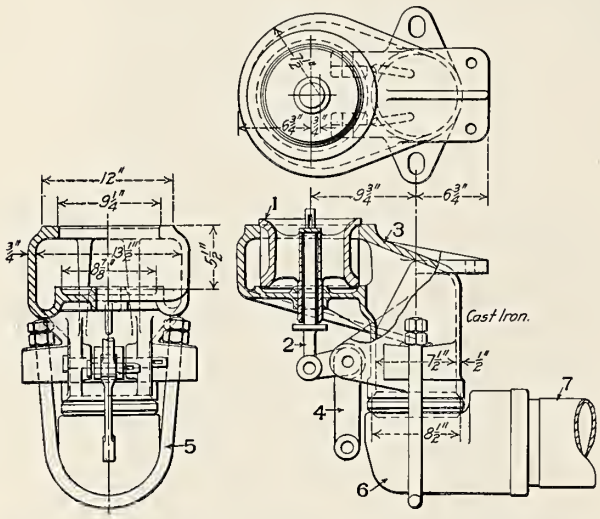

Fig. 288—Throttle Valve Used on Experimental Pacific Type (4-6-2) Locomotive No. 50,000; American Locomotive Company.

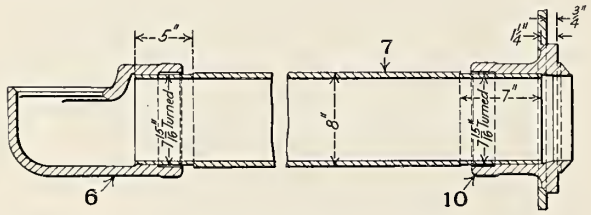

Fig. 289—Dry Pipe for Pacific Type (4-6-2) Locomotive. Built for the New York Central & Hudson River by the American Locomotive Company.

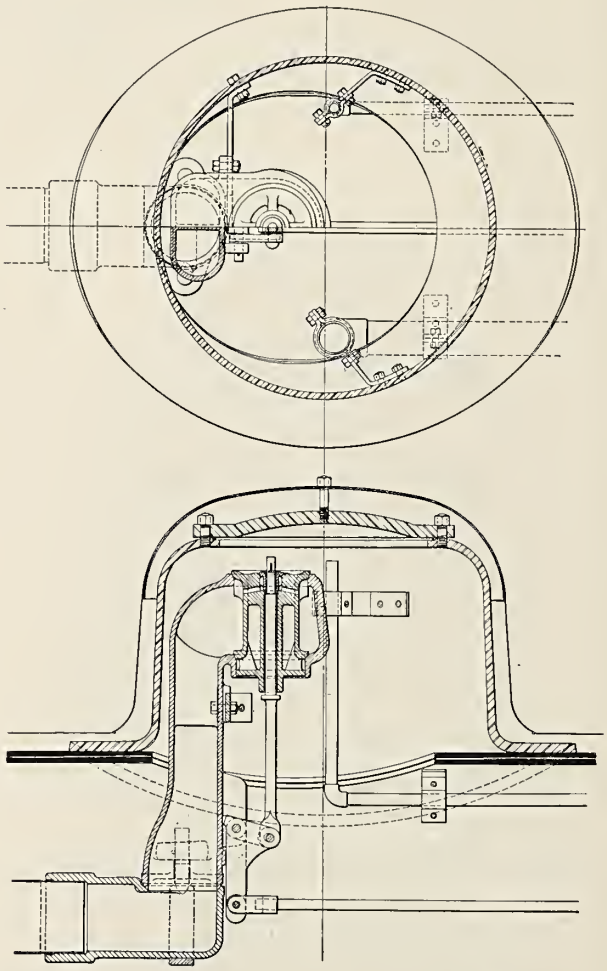

Fig. 290—General Arrangement of Rushton Throttle Valve with Drifting Valve and Flattened Throttle Pipe; Baldwin Locomotive Works.

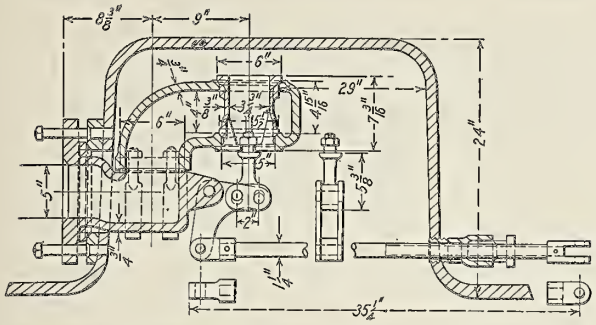

Fig. 291—Rushton Throttle Valve Applied to Pressed Steel Dome; Baldwin Locomotive Works.

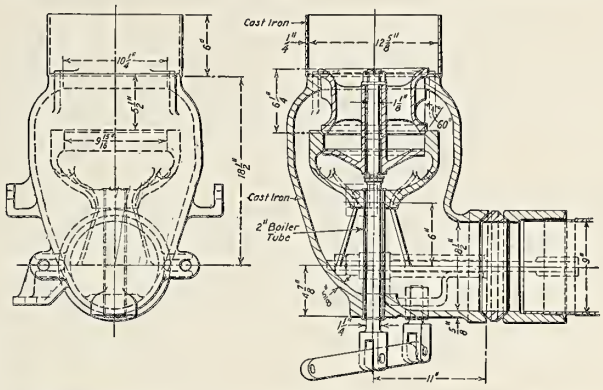

Fig. 292—Woodard Throttle Valve; American Locomotive Company.

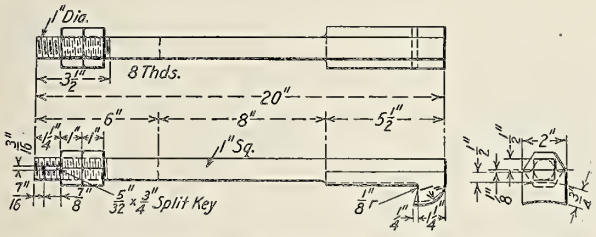

Fig. 293—Throttle Pipe Bolt for Woodard Throttle Valve; American Locomotive Company.

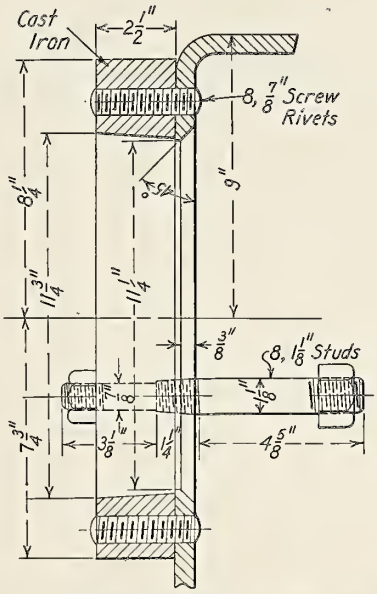

Fig. 295—Tube Sheet Ring for Dry Pipe Used in Connection with Woodard Throttle Valve; American Locomotive Company.

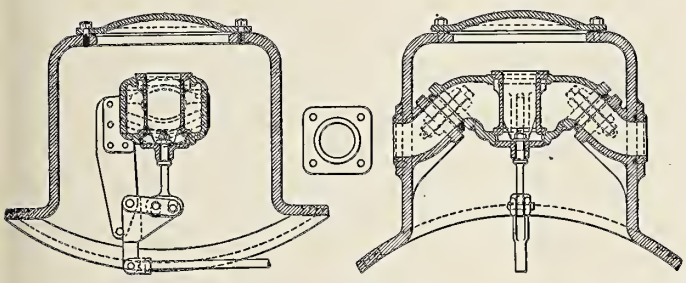

Fig. 294—Arrangement of Throttle Valve on Mallet Articulated (2-6-6-2) Compound Locomotive. Built for the Chicago Great Western by the Baldwin Locomotive Works.

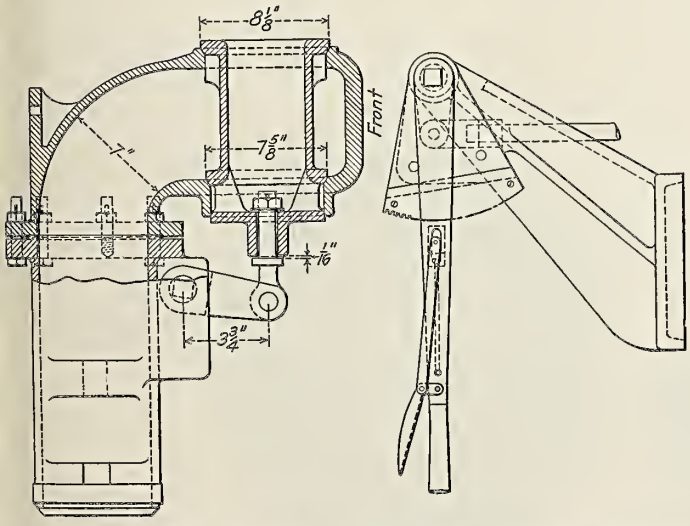

Fig. 296—Throttle Valve with Vertical Throttle Lever for Mikado (2-8-2) Locomotive. Built for the Great Northern by the Baldwin Locomotive Works.

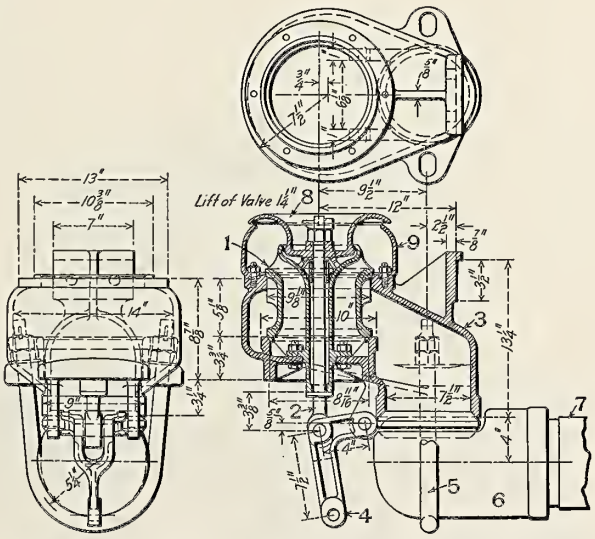

Fig. 297—Mellin Throttle Valve for Mallet Articulated (0-6-6-0) Compound Locomotive. Built for the Kansas City Southern by the American Locomotive Company.

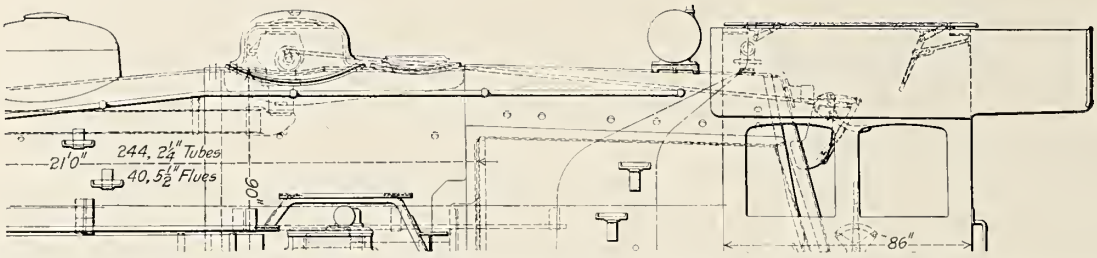

Fig. 298—Chambers Throttle Valve Applied to Atchison, Topeka & Santa Fe Pacific Type (4-6-2) Locomotive; Chambers Valve Company.

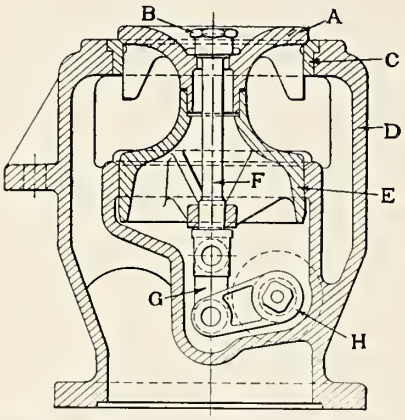

Fig. 299—Throttle Box for Chambers Throttle Valve.

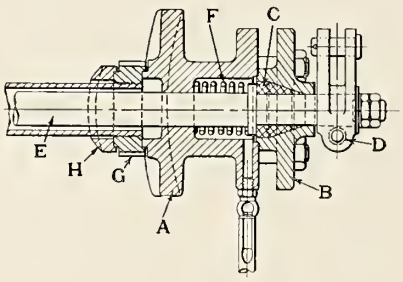

Fig. 300—Stuffing Box for Chambers Throttle Valve.

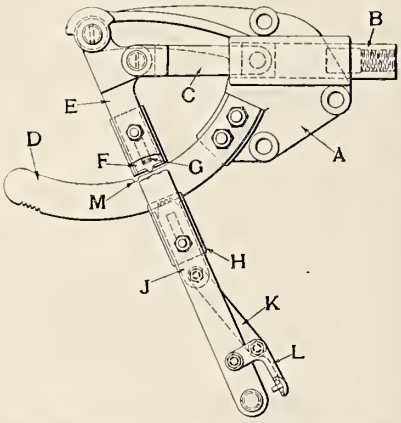

Fig. 301—Throttle Lever for Chambers Throttle Valve.

Names of Parts of Fig. 299.

A *Main Valve.*
B *Balancing and Drifting Valve.*
C *Balancing Ring.*
D *Head.*
E *Balance Piston.*
F *Valve Stem.*
G *Connecting Link.*
H *Inside Crank.*

Names of Parts of Fig. 300.

A *Body.*
B *Gland.*
C *Packing.*
D *Outside Crank.*
E *Operating Shaft.*
F *Spring.*
G *Cover Pipe Nut.*
H *Ball.*

Names of Parts of Fig. 301.

A *Bracket.*
B *Rod Guide.*
C *Link.*
D *Quadrant.*
E *Lever.*
F *Drifting Latch.*
G *Spring.*
H *Latch Box.*
J *Latch.*
K *Latch Link.*
L *Latch Handle.*
M *Drifting Notch.*

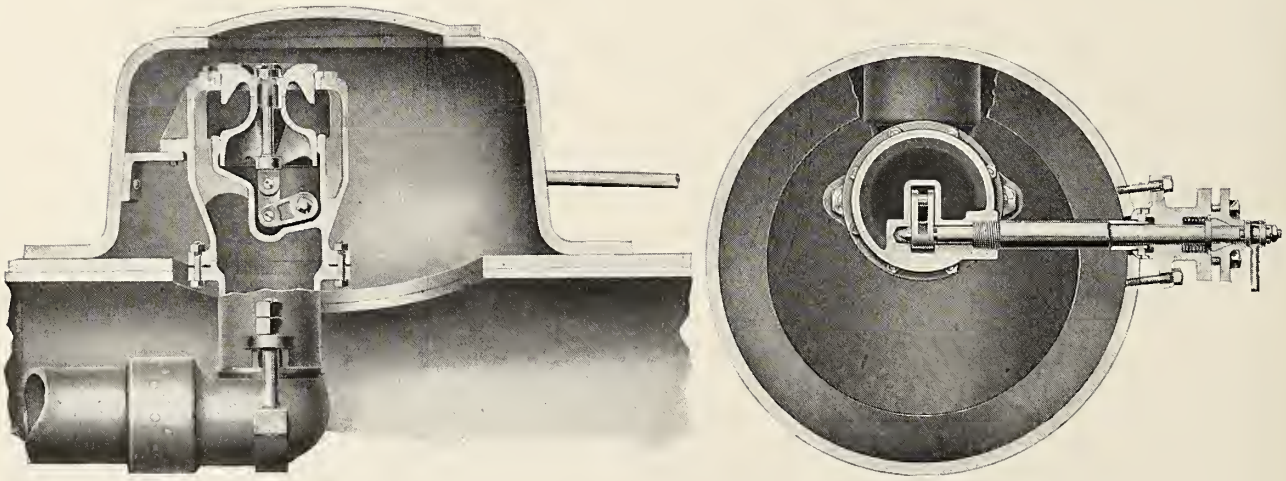

Fig. 302—Chambers Throttle Valve; Chambers Valve Company.

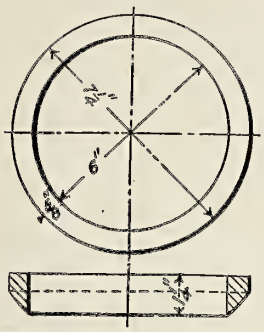

Fig. 303 — Ground Washer for Dry Pipe Ball Joint.

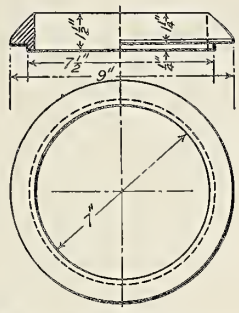

Fig. 304 — Ground Washer for Steam Pipe Ball Joint.

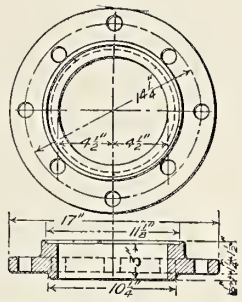

Fig. 305 — Dry Pipe Sleeve.

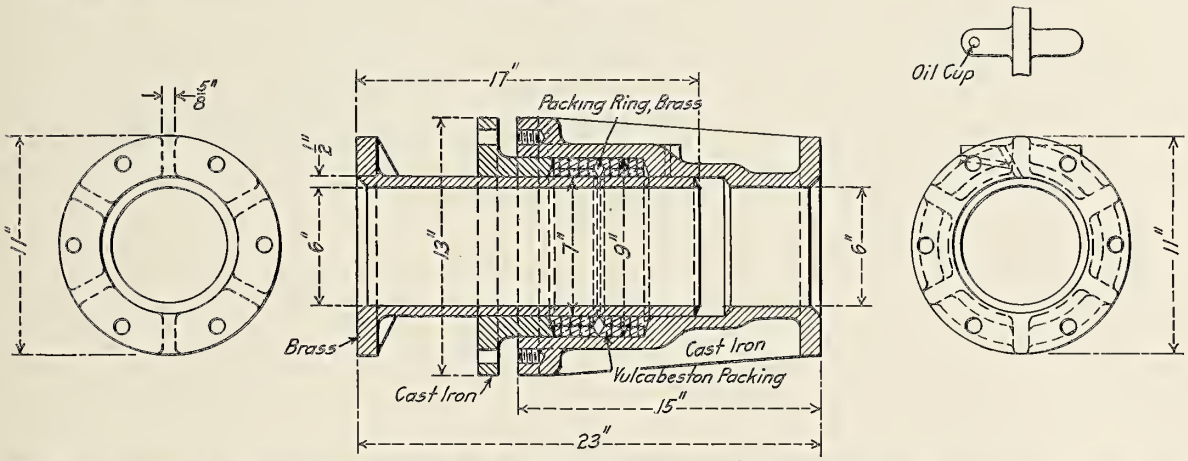

Fig. 306—Steam Pipe Expansion Joint for Mallet Articulated (0-8-8-0) Compound Locomotive. Built for the Baltimore & Ohio by the American Locomotive Company.

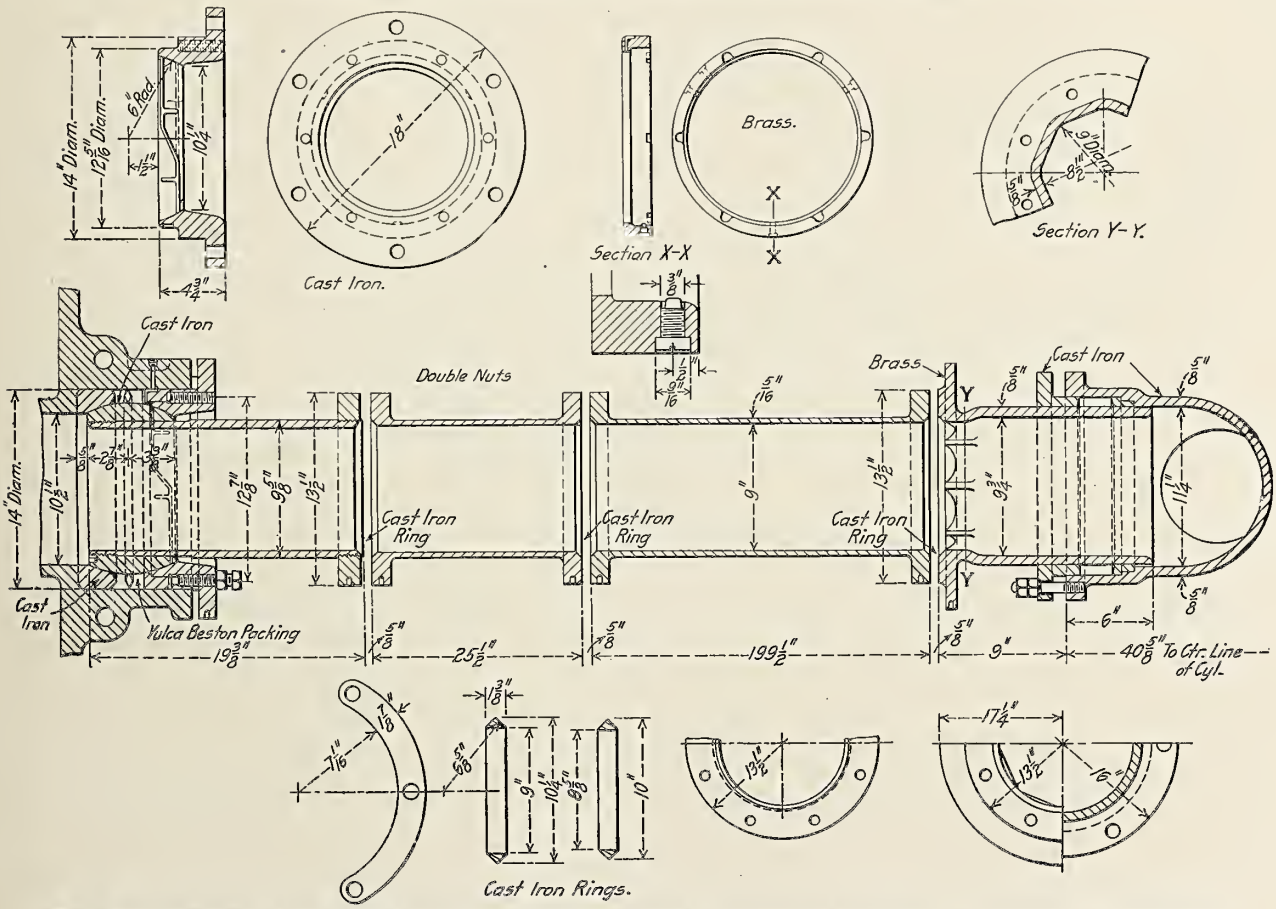

Fig. 307—Receiver Pipe and Expansion Joint for Mallet Articulated (0-8-8-0) Compound Locomotive. Built for the Baltimore & Ohio by the American Locomotive Company.

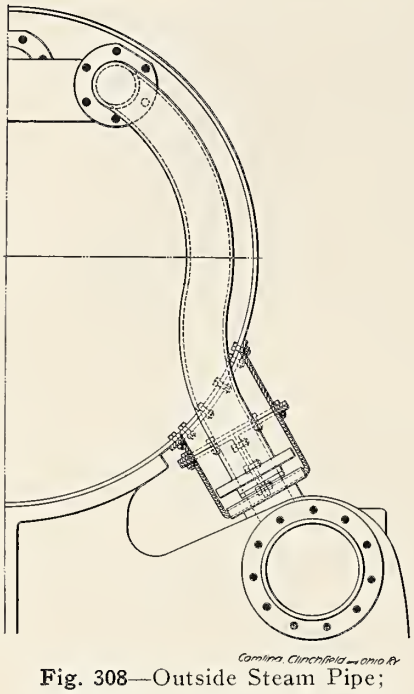

Fig. 308—Outside Steam Pipe; Baldwin Locomotive Works.

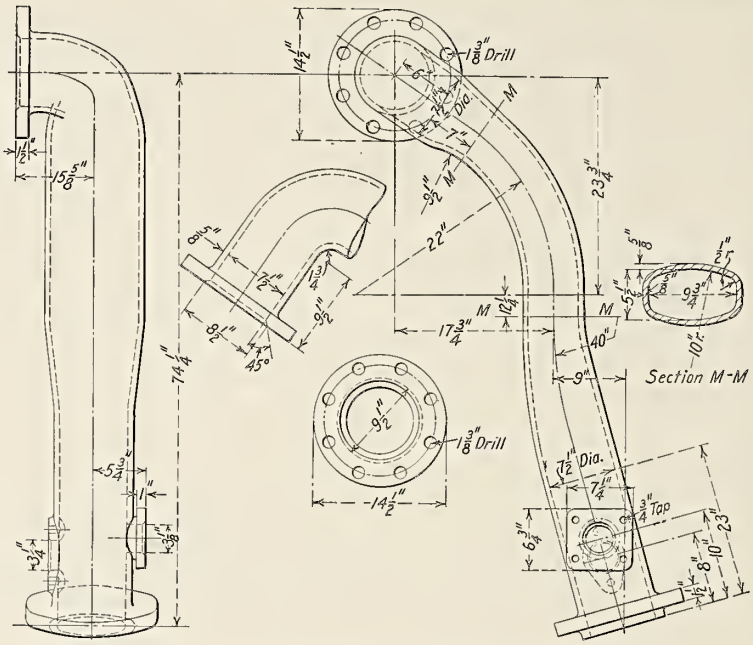

Fig. 309—Outside Steam Pipe; American Locomotive Company.

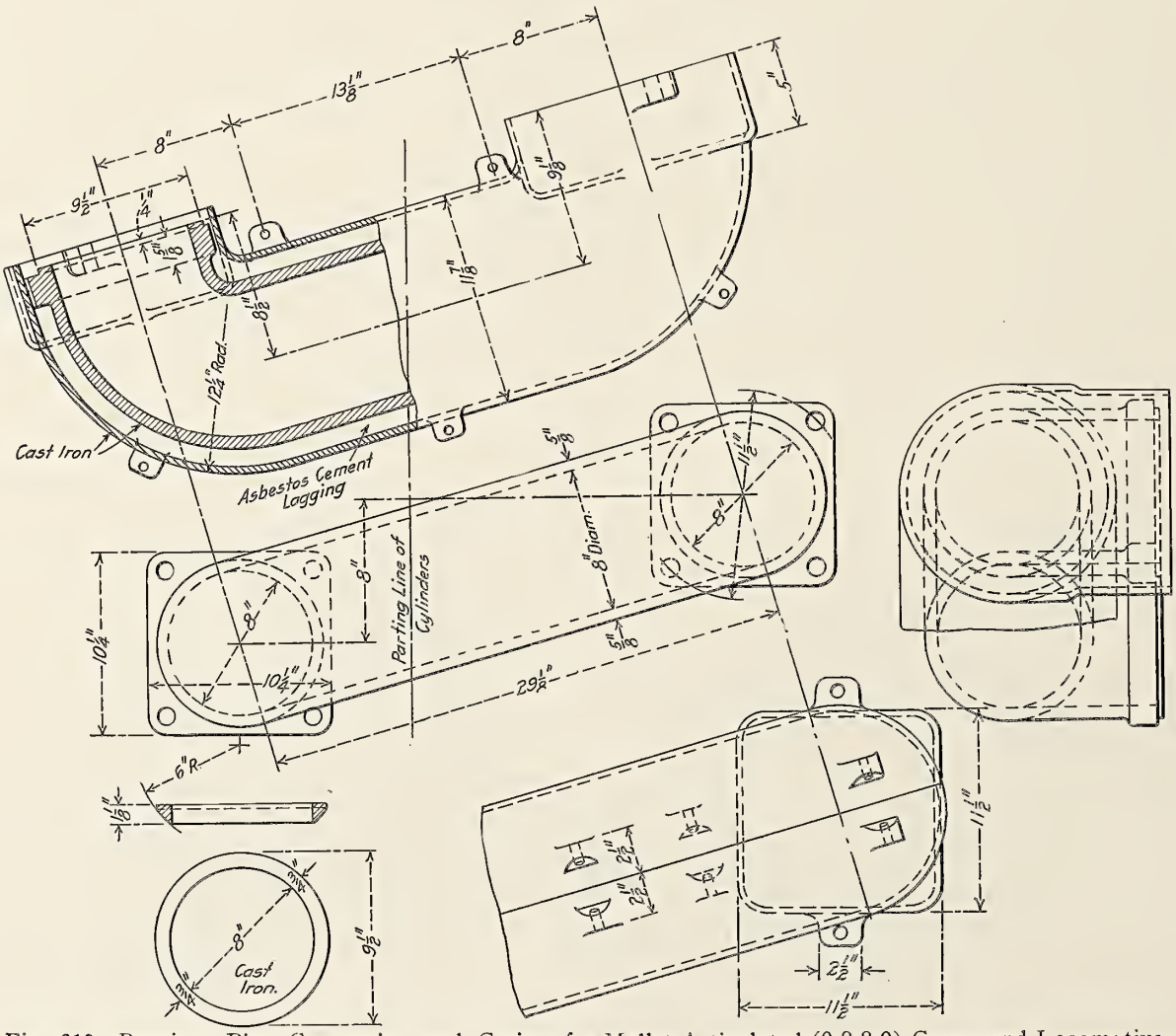

Fig. 310—Receiver Pipe Connection and Casing for Mallet Articulated (0-8-8-0) Compound Locomotive. Built for the Baltimore & Ohio by the American Locomotive Company.

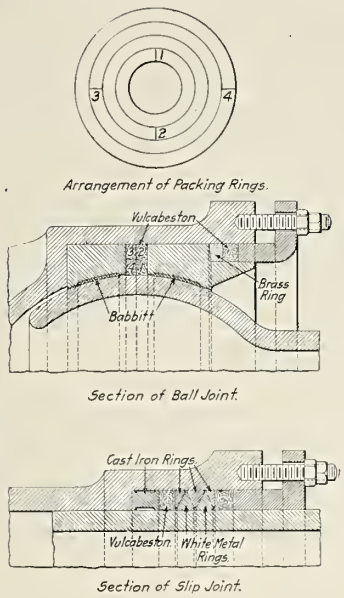

Fig. 311—H. W. Johns-Manville Vulcabeston Packing Applied to Mallet Locomotive Steam Pipe Joints as Designed by the Baldwin Locomotive Works.

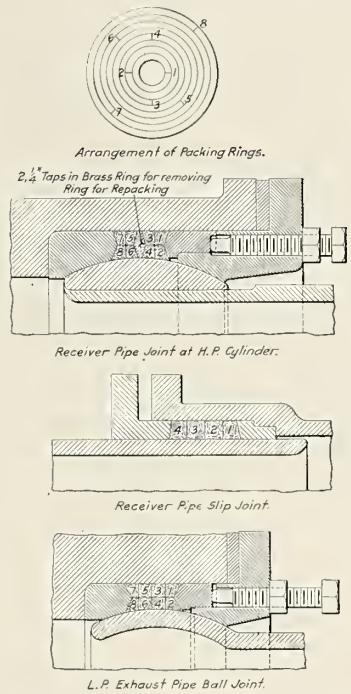

Fig. 312—H. W. Johns-Manville Vulcabeston Packing Applied to Mallet Locomotive Exhaust and Receiver Pipe Joints as Designed by the American Locomotive Company.

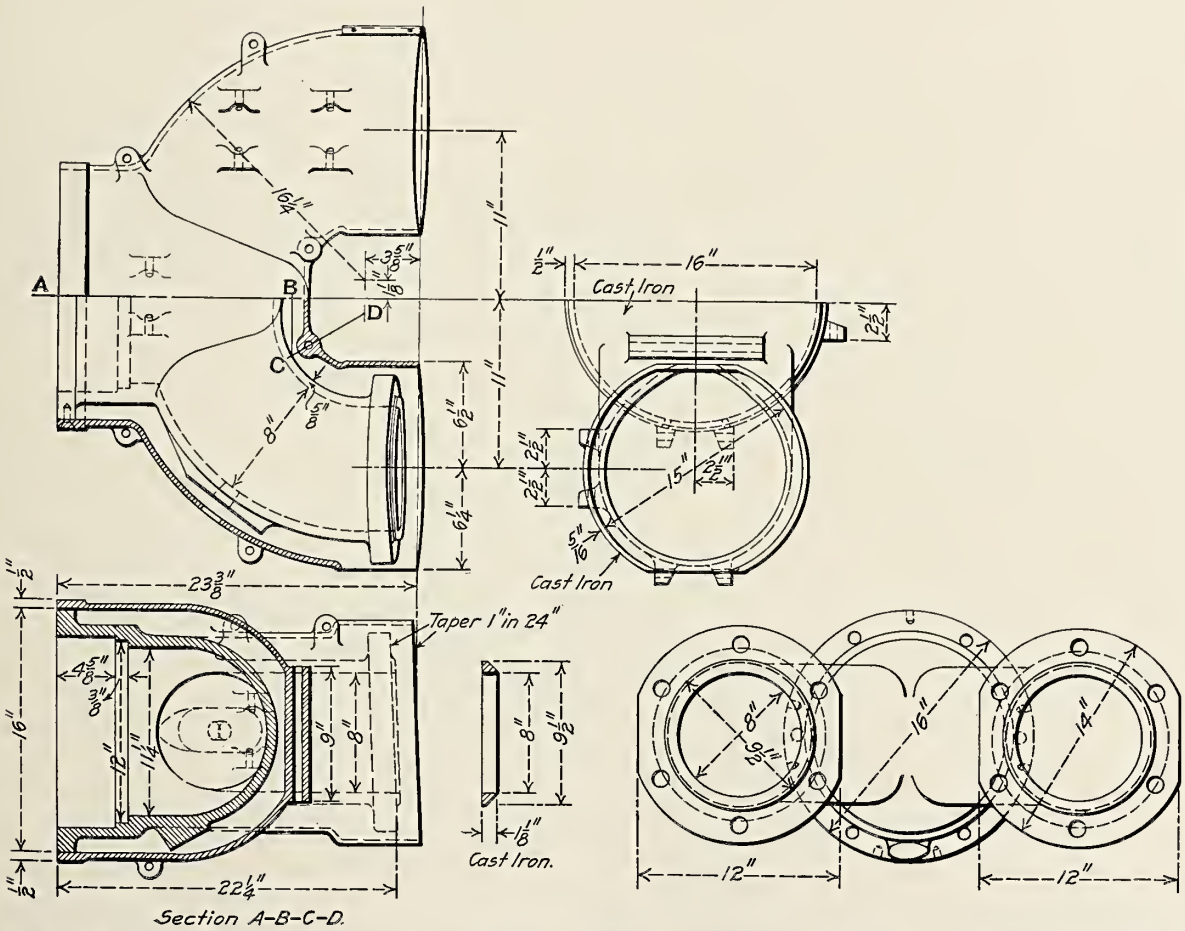

Fig. 313—Receiver Pipe Connection and Casing for Mallet Articulated (0-8-8-0) Compound Locomotive. Built for the Baltimore & Ohio by the American Locomotive Company.

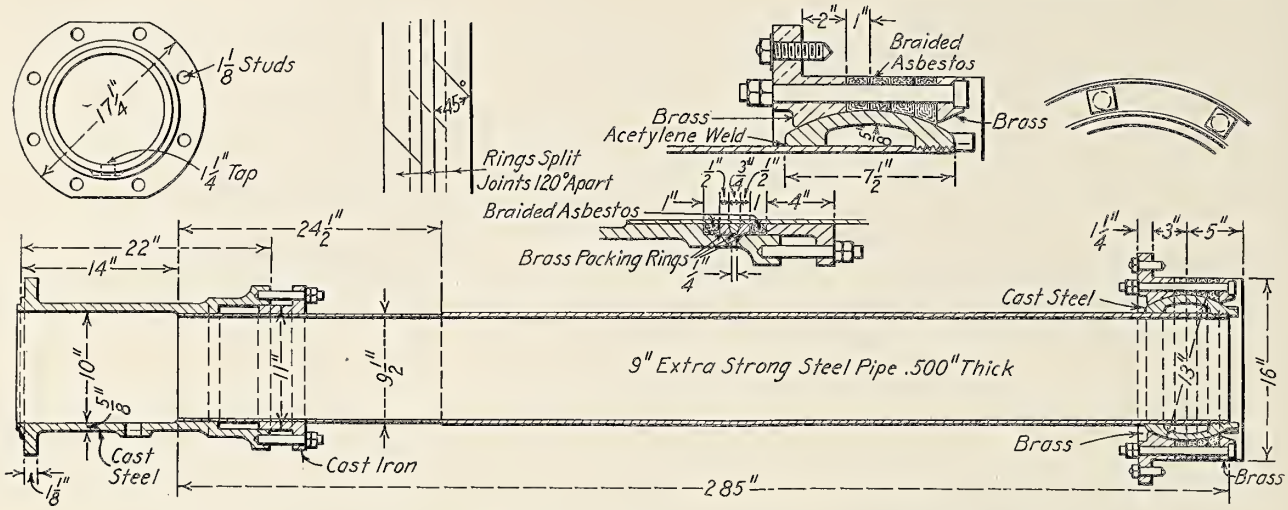

Fig. 314—Receiver Pipe for Mallet Articulated Triplex (2-8-8-8-2) Locomotive. Built for the Erie by the Baldwin Locomotive Works.

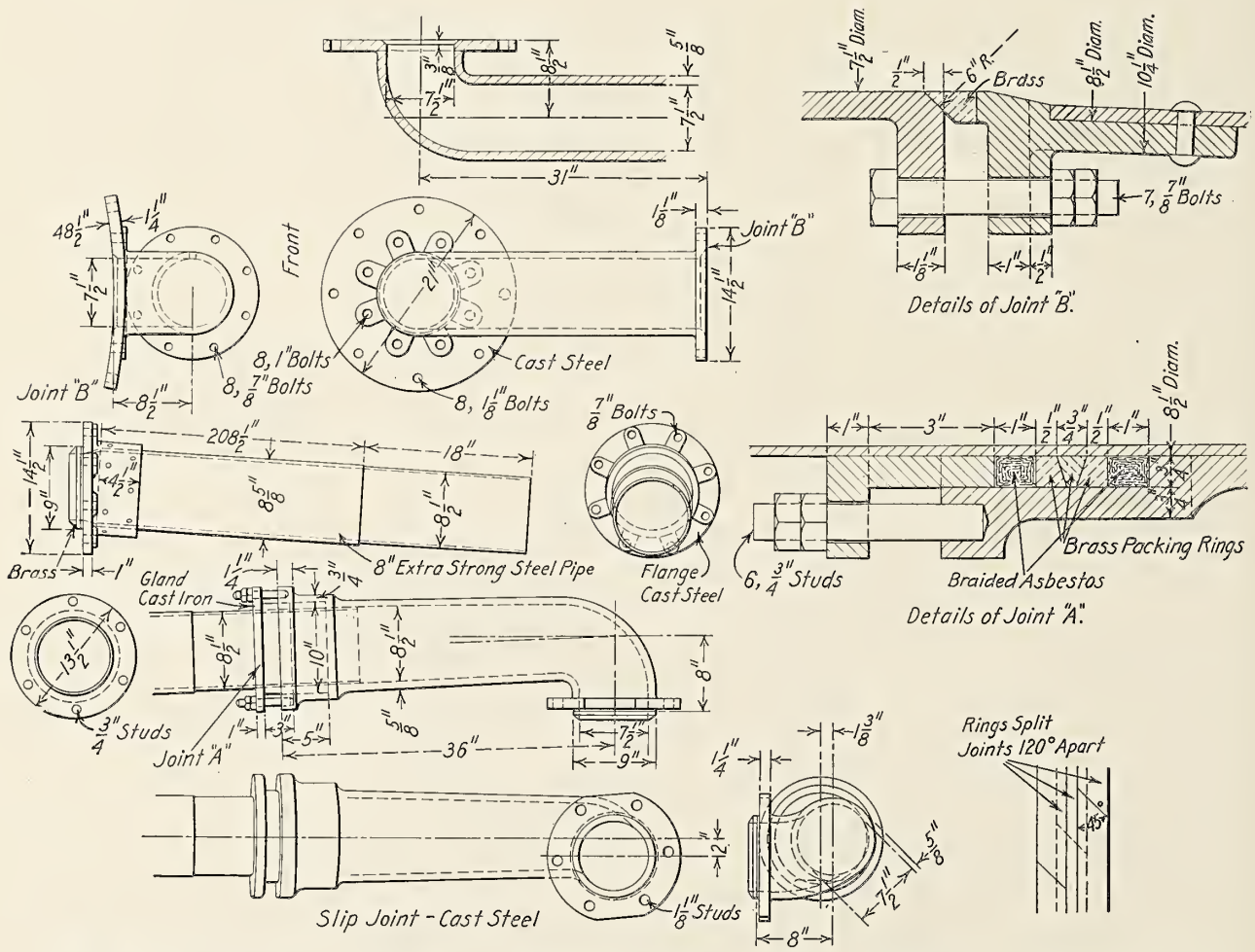

Fig. 315—High-Pressure Steam Pipe for Mallet Articulated Triplex (2-8-8-8-2) Locomotive. Built for the Erie by the Baldwin Locomotive Works.

Names of Parts of Steam Pipes, Figs. 317-319.

6	*Boiler Shell*	12	*Steam Pipe*	43	*Auxiliary Steam Pipe*
7	*Dry Pipe*	12a	*Steam Pipe Studs*	44	*Ball Joint Washer*
8	*Stiffening Ring*	13	*Smokebox*	45	*Cylinder Saddle*
10	*Tee or Nigger Head*	29	*Front Tube Sheet*		
11	*Dry Pipe Sleeve*	30	*Smokebox and Boiler Ring*		

Fig. 316—Plan and Elevation of the Steam and Exhaust Piping for Mallet Articulated (0-6-6-0) Simple Locomotive. Built by the Canadian Pacific.

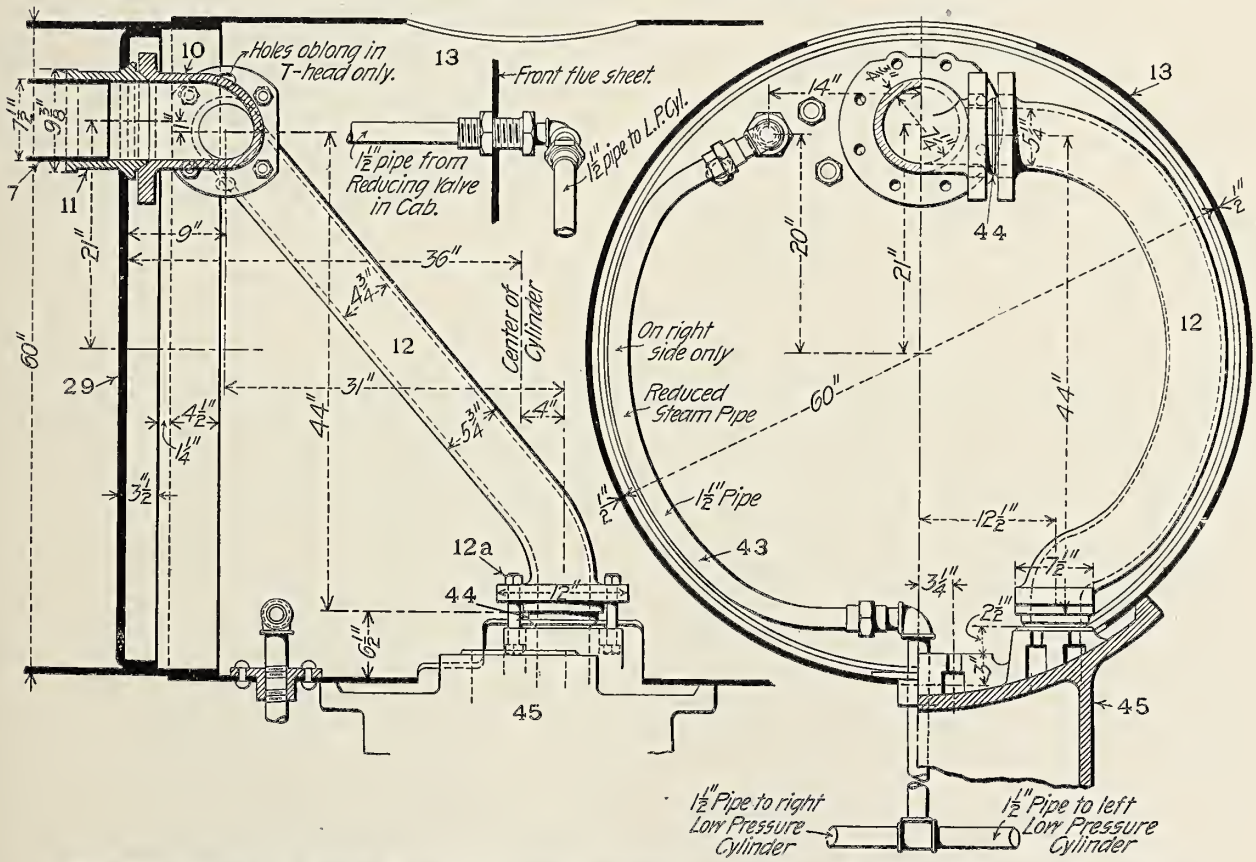

Fig. 317—Details of Steam Pipes of Cross Compound Locomotive; Atchison, Topeka & Santa Fe.

Numbers Refer to Names of Parts on Page 288.

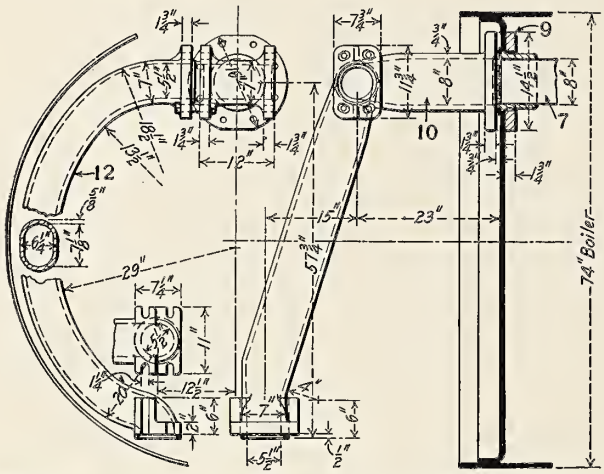

Fig. 318—Cast Iron Steam Pipe for Mikado (2-8-2) Locomotive. Built for the Atlantic Coast Line by the Baldwin Locomotive Works.

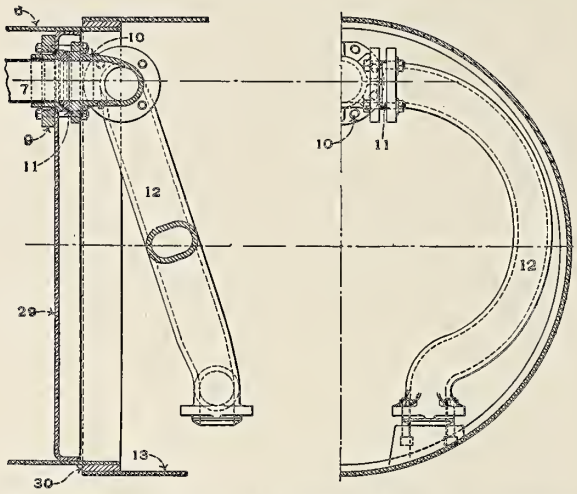

Fig. 319—Dry Pipe and Steam Pipe Connections.

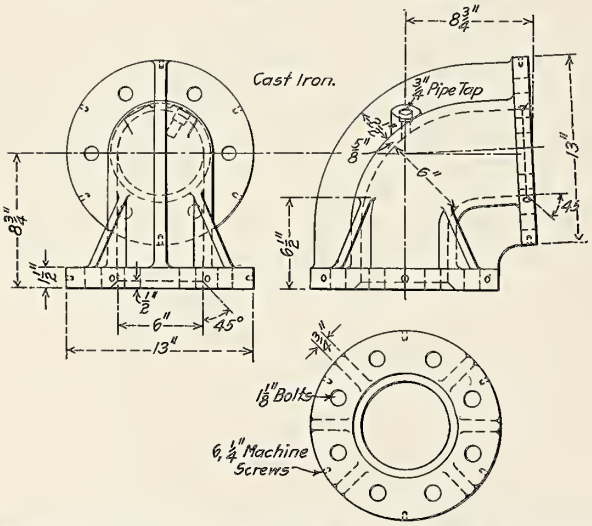

Fig. 320—Steam Pipe Elbow at the High Pressure Cylinder.

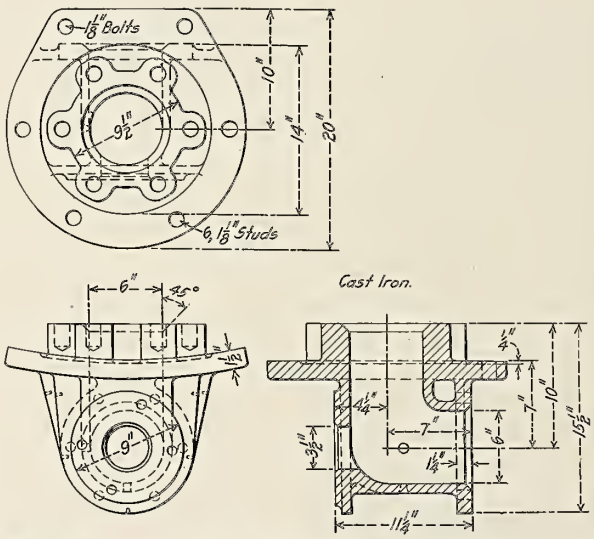

Fig. 321—Steam Pipe Elbow at the Smokebox for Mallet Articulated (0-8-8-0) Compound Locomotive. Built for the Baltimore & Ohio by the American Locomotive Company.

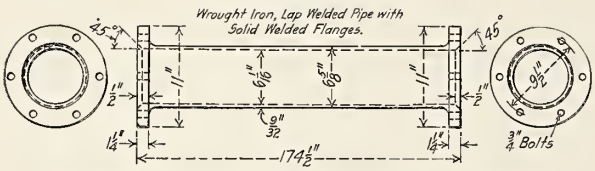

Fig. 322—Outside High Pressure Steam Pipe.

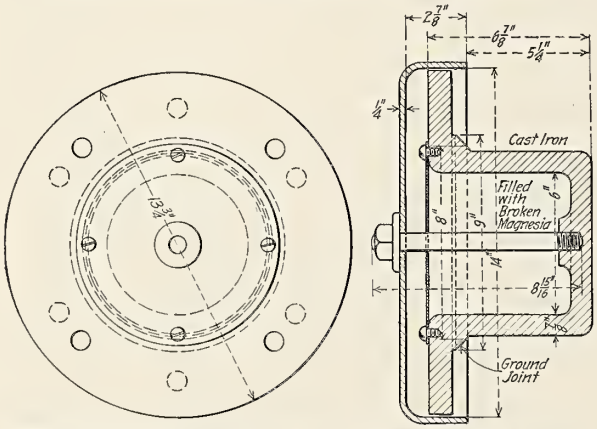

Fig. 323—Receiver Chamber Cover and Casing.

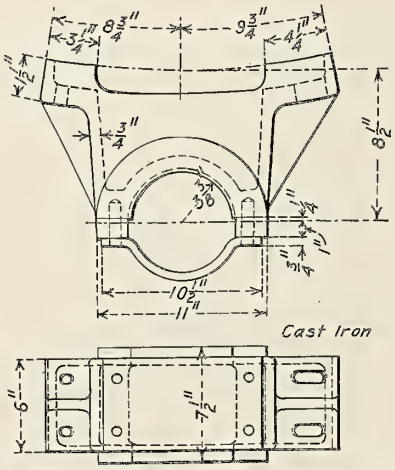

Fig. 324—Outside Steam Pipe Support.

Figs. 320-324 Details of Steam Pipes for Mallet Articulated (0-8-8-0) Compound Locomotive. Built for the Baltimore & Ohio by the American Locomotive Company.

Numbers Refer to Names of Parts on Page 288.

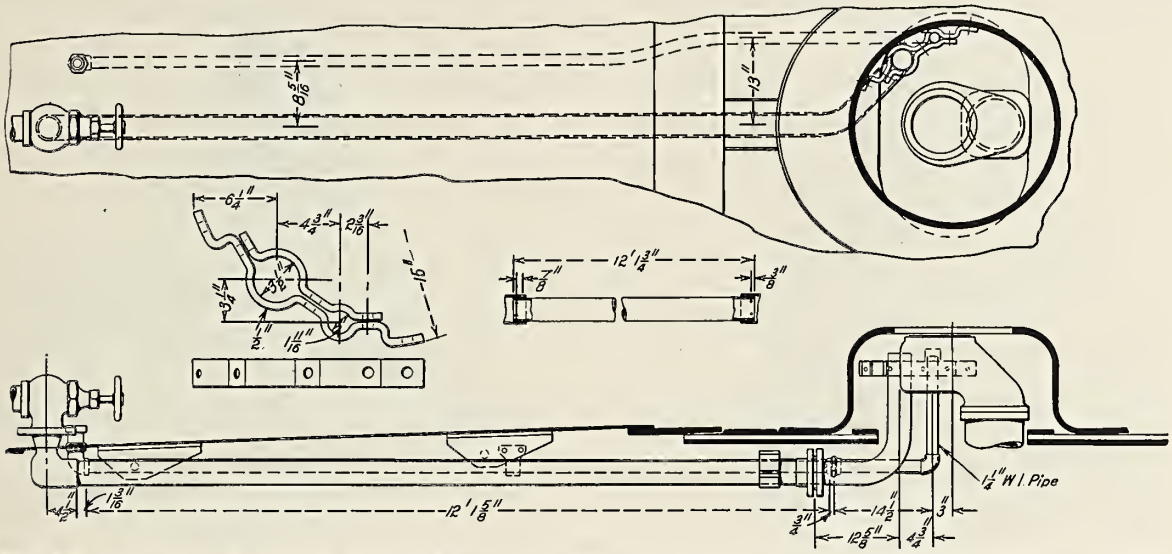

Fig. 325—Location of Internal Bridge Pipe and Lubricator Dry Pipe on Class E-6 Atlantic Type (4-4-2) Locomotive; Pennsylvania Railroad.

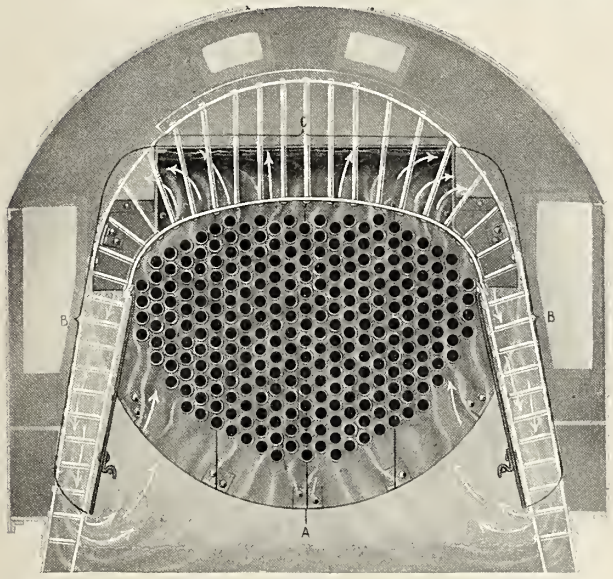

Fig. 326—End Elevation Showing Direction of Currents from the Barrel of the Boiler, Ross-Schofield System of Circulation; The Q & C Company.

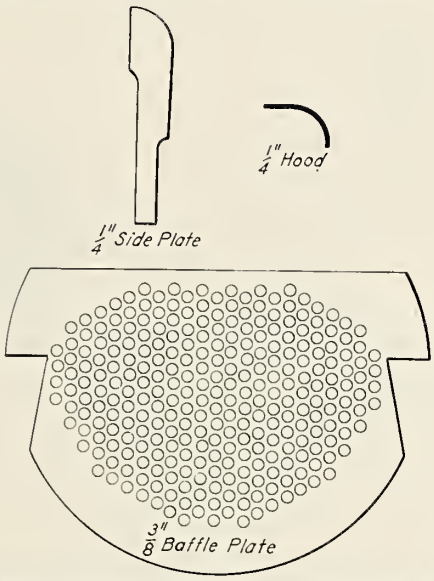

Fig. 327—Detail of Parts, Ross-Schofield System of Circulation; The Q & C Company.

Fig. 328—Direction of Currents Over the Crown Sheet, Ross-Schofield System of Circulation; The Q & C Company.

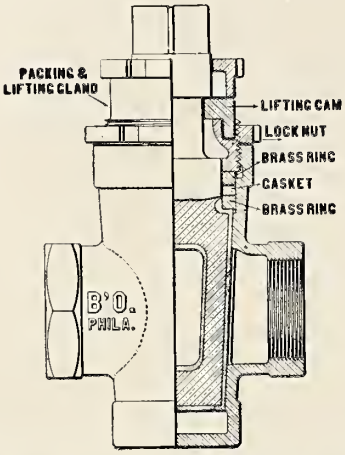

Fig. 329—Bordo Blow-off Plug Valve.

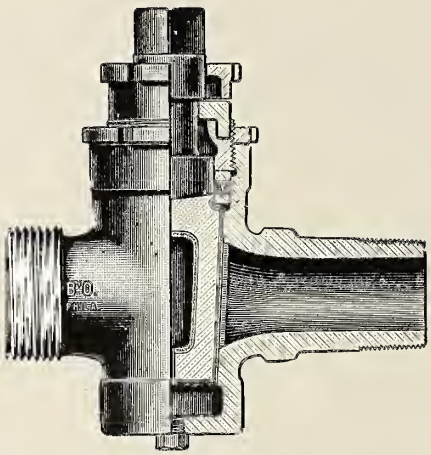

Fig. 330—Sectional View of Bordo Blow-off Plug Valve.

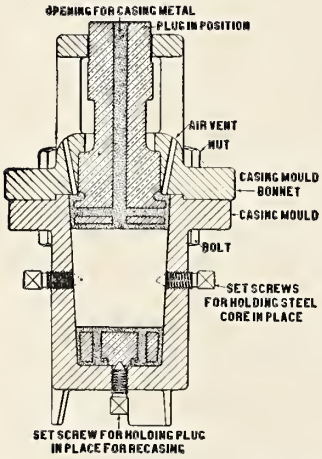

Fig. 331—Moulds for Recasing Bordo Plugs.

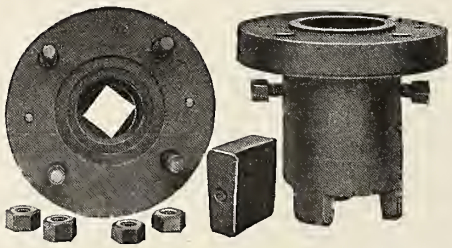

Fig. 332—Parts of Bordo Recasing Moulds.

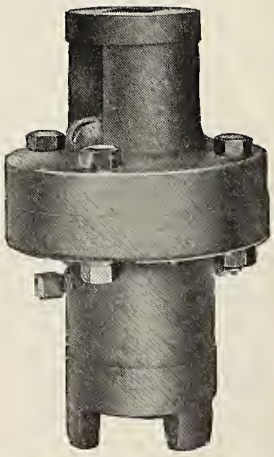

Fig. 333—Bordo Recasing Moulds.

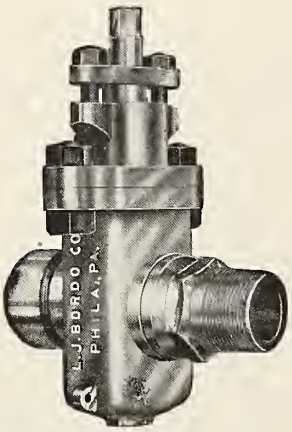

Fig. 334 — Bordo Reversible Gate and Renewable Seat Blow-off Valve.

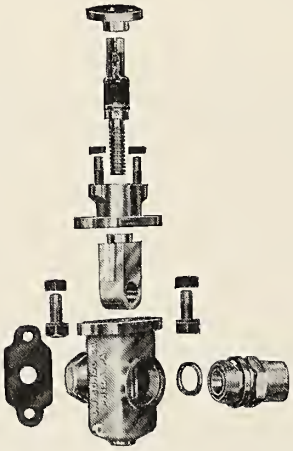

Fig. 335—Details of Bordo Reversible Gate and Renewable Seat Blow-off Valve.

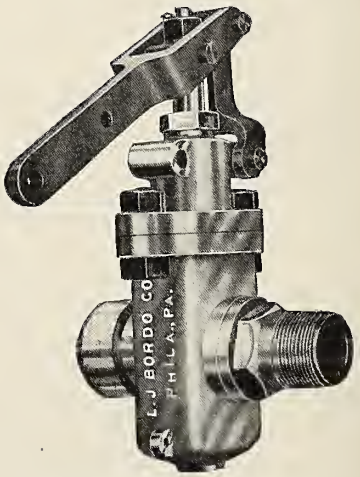

Fig. 336 — Bordo Reversible Gate and Renewable Seat Blow-off Valve with Quick Action Lever.

L. J. Bordo Company.

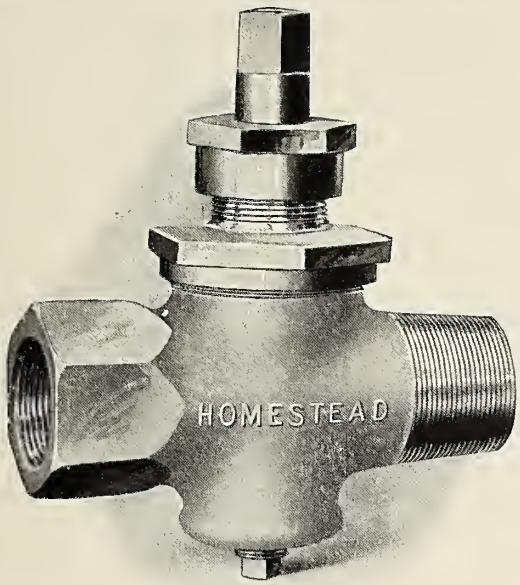

Fig. 337—Blow-off Cock; Homestead Valve Manufacturing Company.

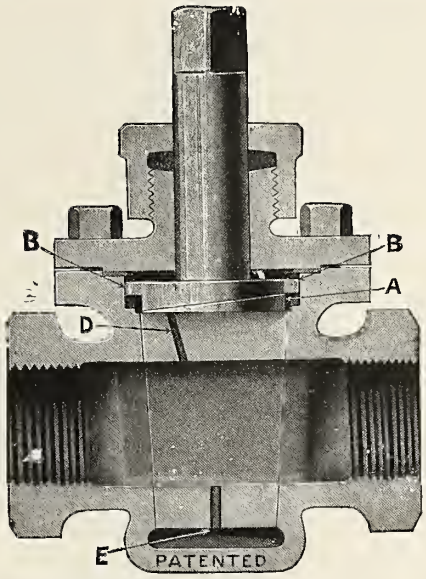

Fig. 338—Straightway Valve; Homestead Valve Manufacturing Company.

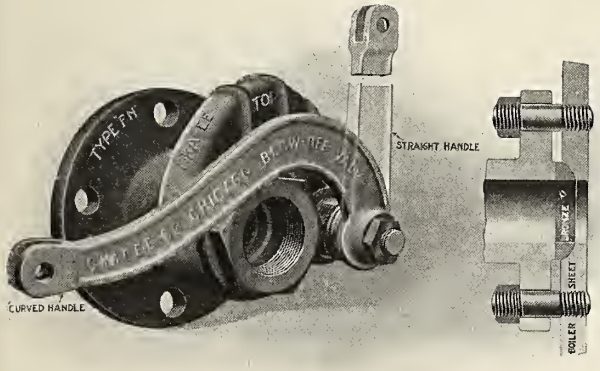

Fig. 339—Blow-off Valve; The Okadee Company.

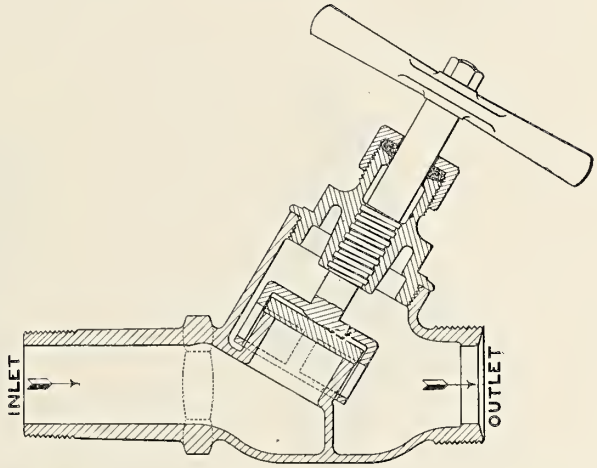

Fig. 340—Hart Blow-off Valve; Nathan Manufacturing Company.

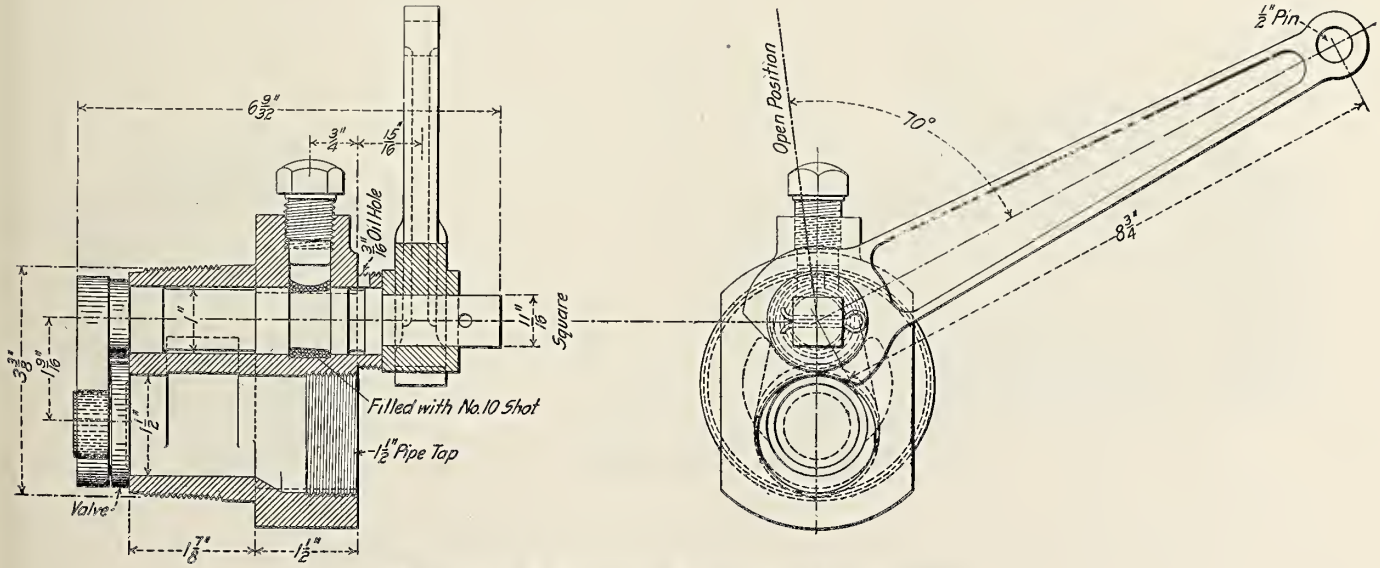

Fig. 341—E. S. E. Blow-off Valve; Sargent Company.

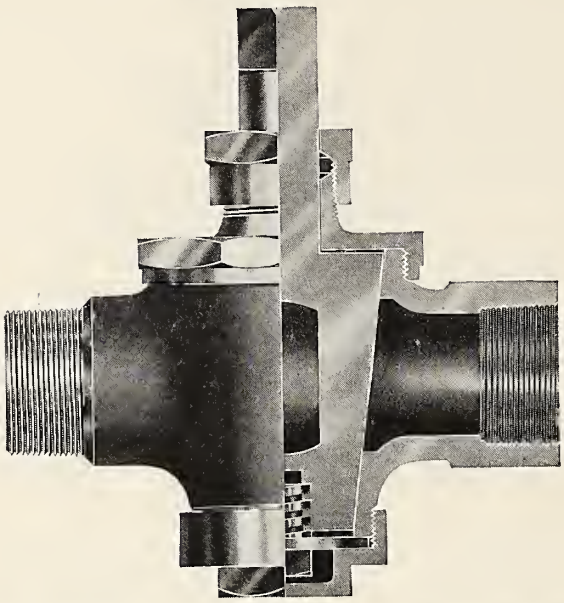

Fig. 342—Blow-off Valve; Ashton Valve Company.

Names of Parts of Fig. 343

A *Bonnet*
a *Bonnet Ring*
Ba *Body*
Da *Stem*
E *Coupling Ring*
F *Coupling Tail*
G *Gland*
P *Packing Nut*
T *Wheel Lock-Nut*
V *Disc*
W *Wheel*

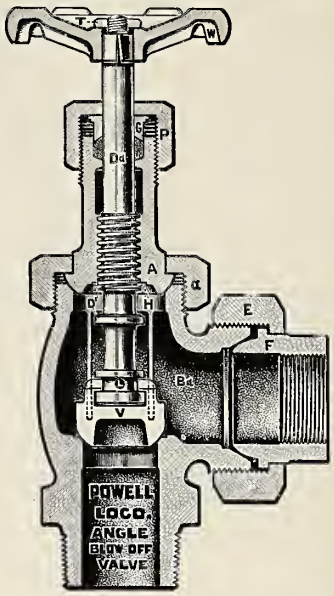

Fig. 343—Blow-off Valve; The William Powell Company.

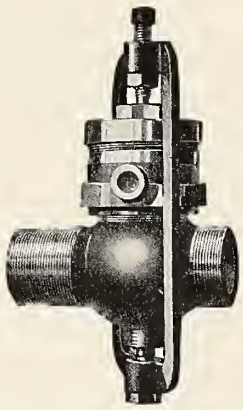

Fig. 344—Little Giant Pneumatic Blow-off Cock, Yoke Style.

Fig. 345—Little Giant Pneumatic Blow-off Cock, Screwed Style.

Fig. 346—Pneumatic Blow-off Cock Operating Valve.

Chicago Pneumatic Tool Company.

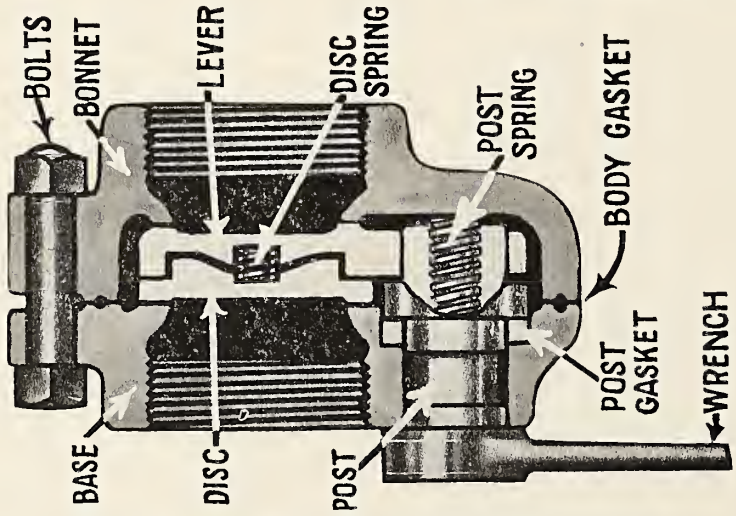

Fig. 347—Sectional View of the Everlasting Blow-off Valve; The Patterson-Allen Engineering Company.

Fig. 348—Everlasting Blow-off Valve; The Patterson-Allen Engineering Company

Standard equipment of Consolidated Pop Safety Valves, Locomotive Types, for various sizes of locomotives. Forms R and S. Based upon Heating Surface.

Using the capacities of Consolidated Pop Safety Valves, Locomotive Types, the following table of locomotive safety valve equipments has thus been compiled. When Consolidated Valves, forms R or S, are applied in accordance with this table, it will not be possible to force the boiler pressure above the popping point of the highest set valve.

Total Heating Surfaces	Locomotive Boiler Pressures—Pounds per Square Inch													
	100		120		140		160		180		200		220	
Sq. Ft.	No. of Valves	Size In.	No. of Valves	Size In.	No. of Valves	Size In.	No. of Valves	Size In.	No. of Valves	Size In.	No. of Valves	Size In.	No. of Valves	Size In.
700	2	1½	2	1½	2	1½	2	1½	2	1½	2	1½	2	1½
800	2 3	2 1½	2	1½	2	1½	2	1½	2	1½	2	1½	2	1½
900	2 3	2 1½	2 3	2 1½	2	1½	2	1½	2	1½	2	1½	2	1½
1,000	2 3	2 1½	2 3	2 1½	2 3	2 1½	2	1½	2	1½	2	1½	2	1½
1,100	2 3	2½ 2	2 3	2 1½	2 3	2 1½	2 3	2 1½	2	1½	2	1½	2	1½
1,200	2 3	2½ 2	2 3	2 1½	2 3	2 1½	2 3	2 1½	2 3	2 1½	2	1½	2	1½
1,300	2 3	2½ 2	2 3	2½ 2	2 3	2 1½	2 3	2 1½	2 3	2 1½	2	1½	2	1½
1,400	2 3	2½ 2	2 3	2½ 2	2 3	2 1½	2 3	2 1½	2 3	2 1½	2 3	2 1½	2	1½
1,500	2 3	3 2	2 3	2½ 2	2 3	2½ 2	2 3	2 1½	2 3	2 1½	2 3	2 1½	2 3	2 1½
1,600	2 3	3 2½	2 3	2½ 2	2 3	2½ 2	2 3	2½ 2	2 3	2 1½	2 3	2 1½	2 3	2 1½
1,700	2 3	3 2½	2 3	3 2	2 3	2½ 2	2 3	2½ 2	2 3	2 1½	2 3	2 1½	2 3	2 1½
1,800	2 3	3½ 2½	2 3	3 2½	2 3	2½ 2	2 3	2½ 2	2 3	2½ 2	2 3	2 1½	2 3	2 1½
1,900	2 3	3½ 2½	2 3	3 2½	2 3	3 2	2 3	2½ 2	2 3	2½ 2	2 3	2 1½	2 3	2 1½
2,000	2 3	3½ 2½	2 3	3 2½	2 3	3 2	2 3	2½ 2	2 3	2½ 2	2 3	2½ 2	2 3	2 1½
2,100	2 3	3½ 3	2 3	3½ 2½	2 3	3 2½	2 3	3 2	2 3	2½ 2	2 3	2½ 2	2 3	2½ 2
2,200	2 3	4 3	2 3	3½ 2½	2 3	3 2½	2 3	3 2	2 3	2½ 2	2 3	2½ 2	2 3	2½ 2
2,300	2 3	4 3	2 3	3½ 2½	2 3	3 2½	2 3	3 2	2 3	3 2	2 3	2½ 2	2 3	2½ 2
2,400	2 3	4 3	2 3	3½ 3	2 3	3½ 2½	2 3	3 2½	2 3	3 2	2 3	2½ 2	2 3	2½ 2
2,500	2 3	4 3	2 3	3½ 3	2 3	3½ 2½	2 3	3 2½	2 3	3 2	2 3	2½ 2	2 3	2½ 2
2,600	2 3	4 3	2 3	4 3	2 3	3½ 2½	2 3	3 2½	2 3	3 2½	2 3	3 2	2 3	2½ 2
2,700	2 3	4 3	2 3	4 3	2 3	3½ 2½	2 3	3½ 2½	2 3	3 2½	2 3	3 2	2 3	2½ 2
2,800	3	3½	2 3	4 3	2 3	3½ 3	2 3	3½ 2½	2 3	3 2½	2 3	3 2	2 3	2½ 2
2,900	3	3½	2 3	4 3	2 3	4 3	2 3	3½ 2½	2 3	3 2½	2 3	3 2½	2 3	3 2
3,000	3	3½	2 3	4 3	2 3	4 3	2 3	3½ 2½	2 3	3½ 2½	2 3	3 2½	2 3	3 2
3,200	3	3½	3	3½	2 3	4 3	2 3	3½ 3	2 3	3½ 2½	2 3	3 2½	2 3	3 2½
3,400	3	4	3	3½	2 3	4 3	2 3	4 3	2 3	3½ 2½	2 3	3½ 2½	2 3	3 2½
3,600	3	4	3	3½	3	3½	2 3	4 3	2 3	3½ 3	2 3	3½ 2½	2 3	3½ 2½
3,800	4	3½	3	4	3	3½	2 3	4 3	2 3	4 3	2 3	3½ 3	2 3	3½ 2½
4,000	4	3½	3	4	3	3½	3	3½	2 3	4 3	2 3	3½ 3	2 3	3½ 2½
4,200	4	3½	3	4	3	3½	3	3½	2 3	4 3	2 3	4 3	2 3	3½ 2½
4,400	4	4	4	3½	3	4	3	3½	3	3	2 3	4 3	2 3	3½ 3
4,600	4	4	4	3½	3	4	3	3½	3	3½	3 2	3 4	2 3	4 3
4,800	4	4	4	3½	3	4	3	3½	3	3½	3	3	2 3	4 3
5,000	4	4	4	3½	3	4	3	4	3	3½	3	3½	2 3	4 3
5,200	5	3½	4	4	4	3½	3	4	3	3½	3	3½	2 3	4 3
5,400	5	3½	4	4	4	3½	3	4	3	3½	3	3½	3	3½
5,600	5	4	4	4	4	3½	3	4	3	4	3	3½	3	3½
5,800	5	4	4	4	4	3½	3	4	3	4	3	3½	3	3½
6,000	5	4	5	3½	4	3½	4	3½	3	4	3	3½	3	3½

Note. The Locomotive equipments shown in the table give the option of using either 2 or 3 standard size valves, except for the larger heating surfaces where more than 2-4 inch, or for the smaller, where less than 3-1½ inch valves, are required.

Consolidated Safety Valve Company.

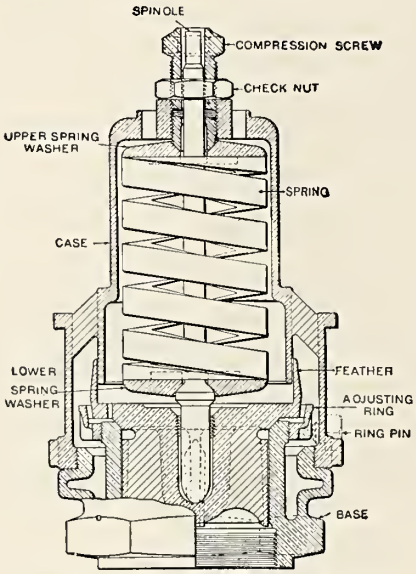

Fig. 349—Form "R," Type "CB" Consolidated Pop Safety Valve, Encased; Consolidated Safety Valve Company.

Fig. 350—Consolidated Guarantee Capacity Tag.

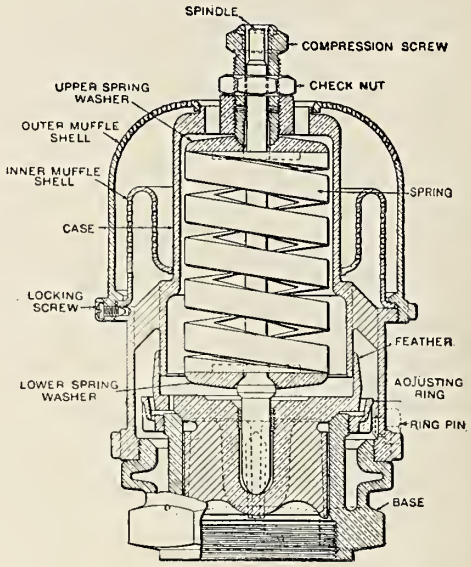

Fig. 351—Form "S" Type "CB" Consolidated Pop Safety Valve, Muffled; Consolidated Safety Valve Company.

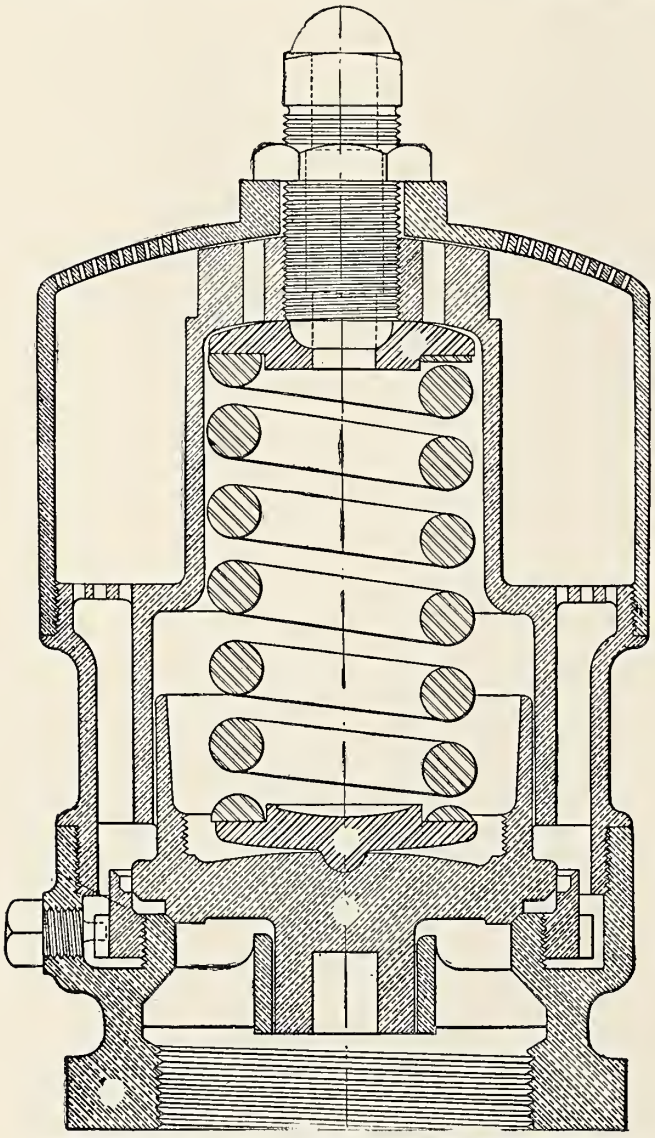

Fig. 352—Type "F" Coale Improved Muffled Safety Valve with New Adjusting Ring; Coale Muffler & Safety Valve Company.

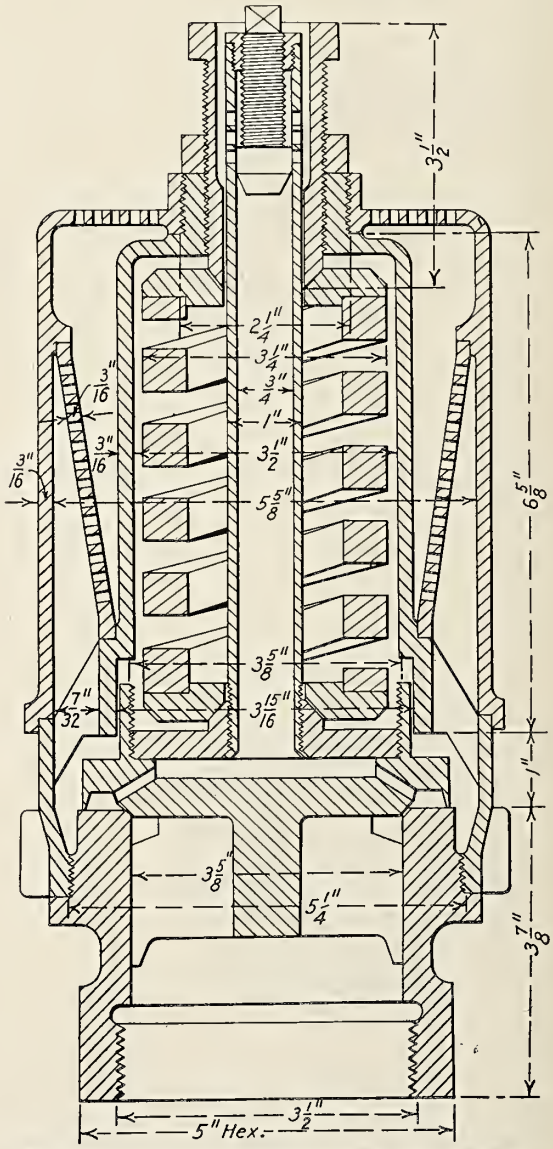

Fig. 353—Sargent Safety Valve; the Sargent Company.

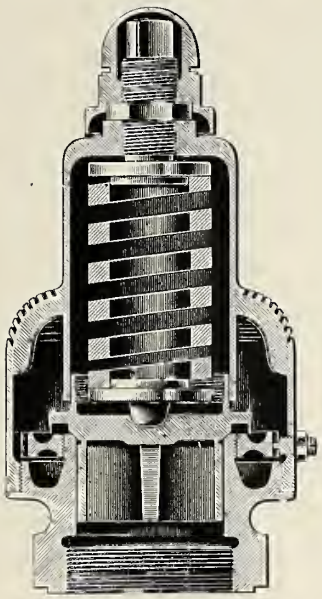

Fig. 354—Star Improved Open Pop Safety Valve.

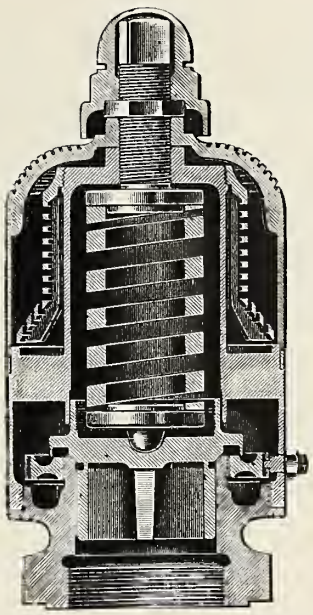

Fig. 355—Star Improved Muffled Safety Valve.

Star Brass Manufacturing Company.

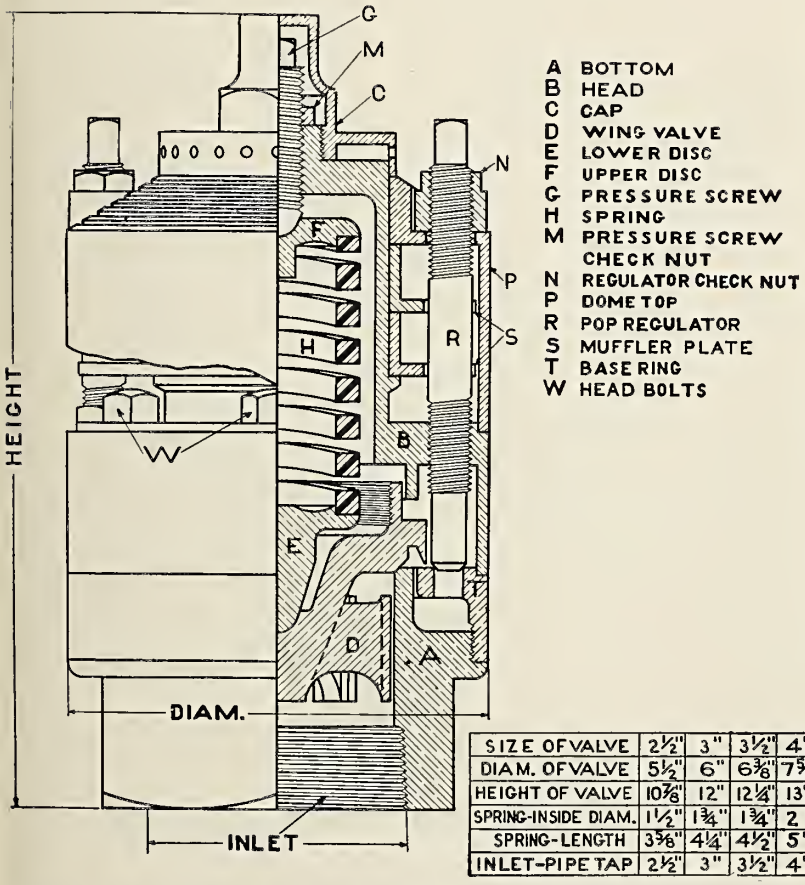

SIZE OF VALVE	2½"	3"	3½"	4"
DIAM. OF VALVE	5½"	6"	6⅜"	7⅝"
HEIGHT OF VALVE	10⅞"	12"	12¼"	13"
SPRING-INSIDE DIAM.	1½"	1¾"	1¾"	2"
SPRING-LENGTH	3⅝"	4¼"	4½"	5"
INLET-PIPE TAP	2½"	3"	3½"	4"

Fig. 356—Ashton Muffled Pop Safety Valve; Ashton Valve Company.

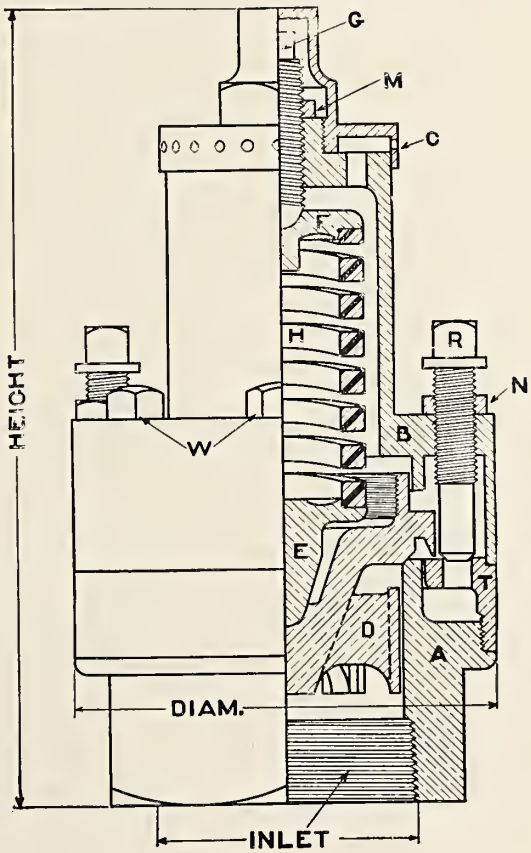

Fig. 357—Ashton Open Pop Safety Valve; Ashton Valve Company.

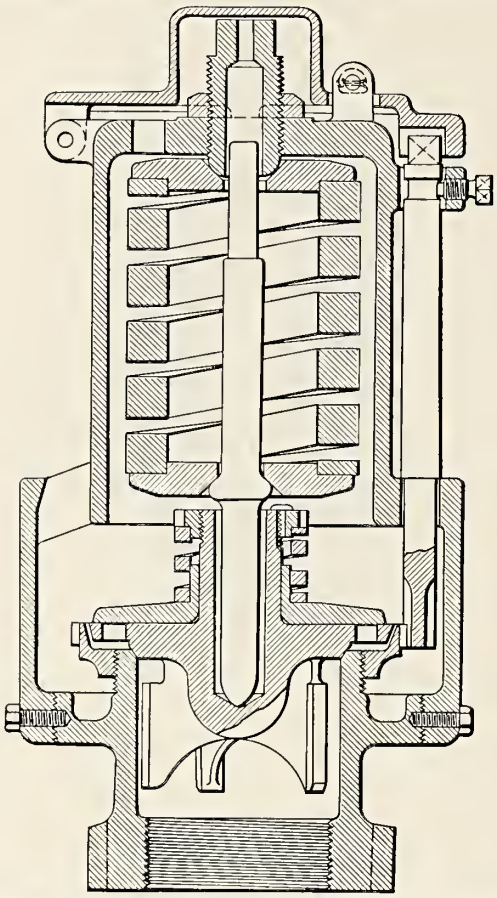

Fig. 358—Pop Safety Valve; The Crane Company.

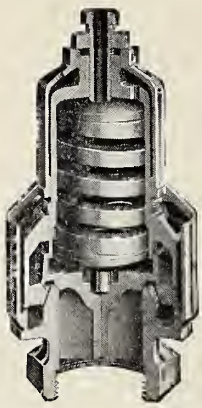

Fig. 359—Open Pop Safety Valve.

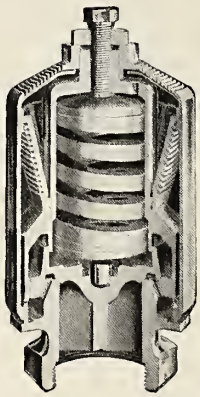

Fig. 360—Muffled Pop Safety Valve.
American Steam Gauge & Valve Mfg. Company.

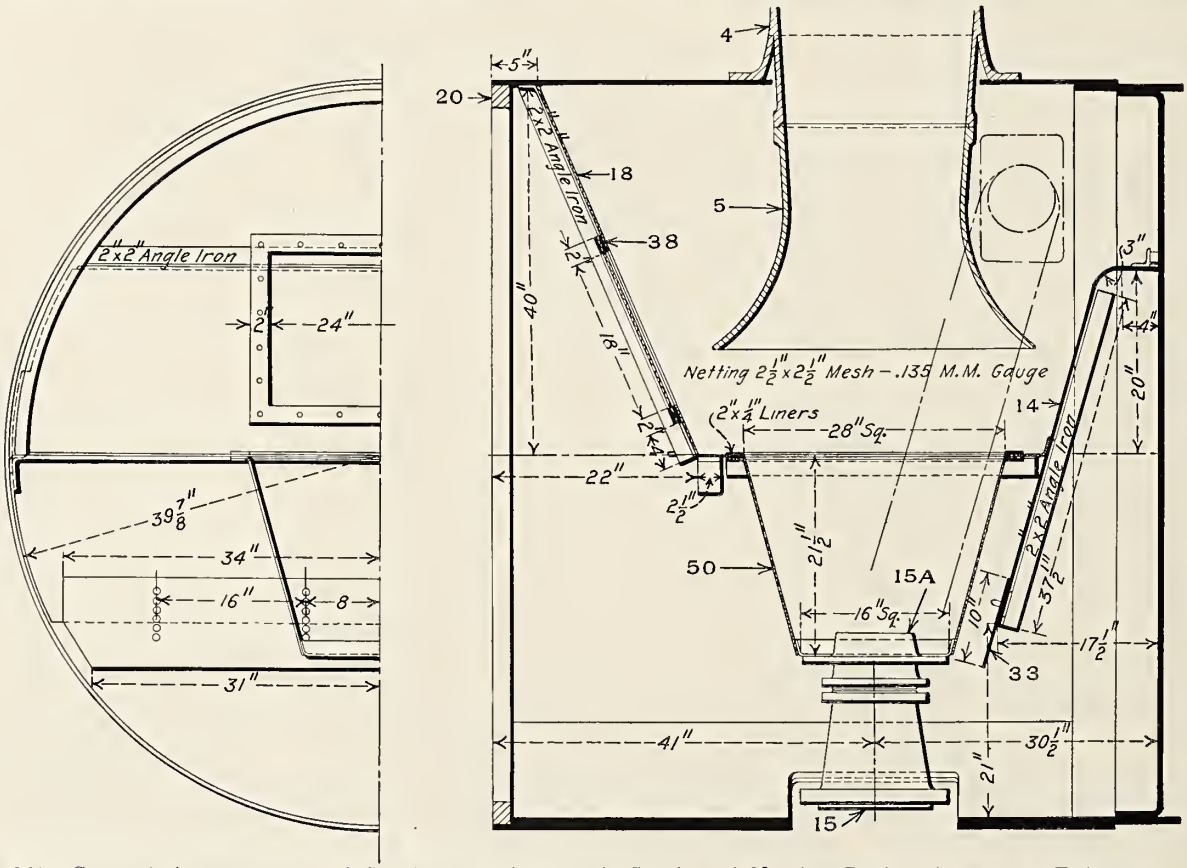

Fig. 361—General Arrangement of Smokebox with Inside Stack and Netting Basket Above the Exhaust Nozzle; Baldwin Locomotive Works.

Numbers Refer to Names of Parts on Page 299.

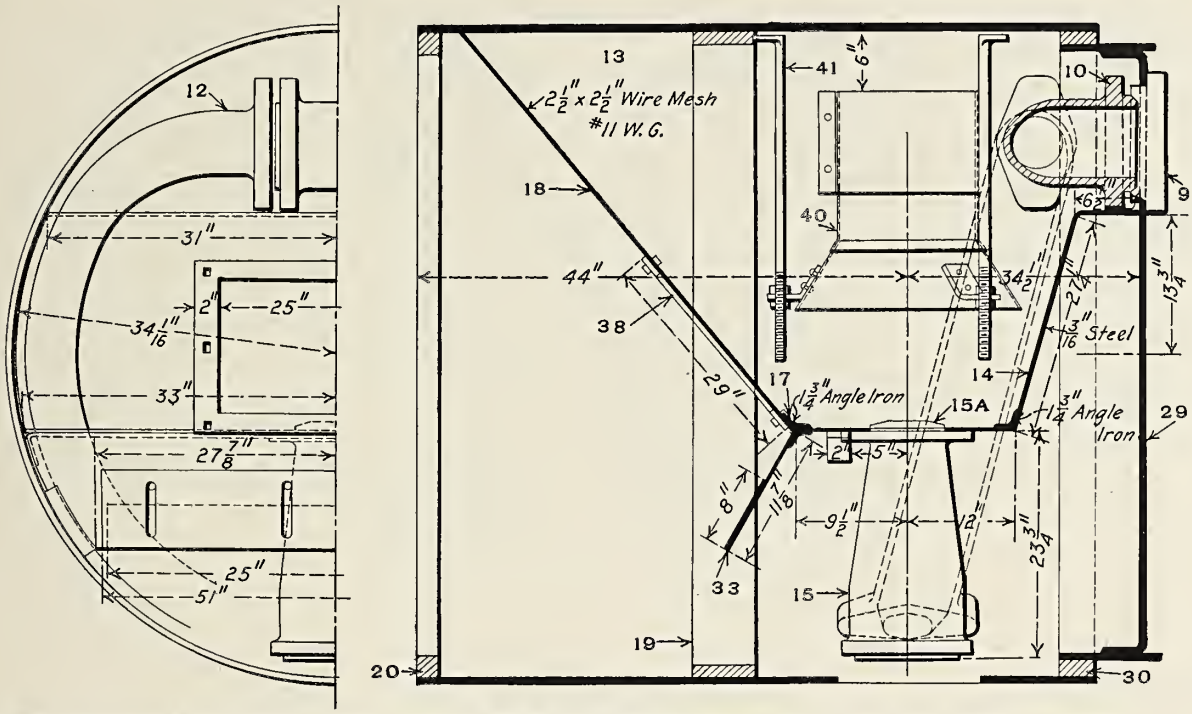

Fig. 362—General Arrangement of the Master Mechanics' Association Self-Cleaning Smokebox; Baldwin Locomotive Works.

Names of Parts of Smokeboxes, Figs. 361-407.

4 *Smoke Stack*
5 *Inside Stack or Lift Pipe*
9 *Stiffening Ring*
10 *Tee or Nigger Head*
12 *Steam Pipe*
13 *Smokebox*
14 *Diaphragm*
15 *Exhaust Pipe*
15a *Exhaust Nozzle or Tip*
17 *Deflector Angle*
18 *Deflector*
19 *Smokebox Joint Ring*
20 *Smokebox Front Ring*
21 *Smokebox Front*
22 *Smokebox or Front End Door*
22a *Smokebox Door Bolts*
22b *Smokebox Door Hinge*
23 *Number Plate*
24 *Number Plate Studs*
25a *Cleaning Hole Flange*
25b *Cleaning Hole Cover or Cap*
25c *Cleaning Hole Cover Handle*
25d *Cleaning Hole Cover Latch*
25e *Cleaning Hole Cover Chain*
27 *Hand Rail*
28 *Hand Rail Post*
29 *Front Tube Sheet*
30 *Smokebox and Boiler Ring*
33 *Diaphragm Apron*
38 *Deflector Door Frame*
40 *Petticoat Pipe*
41 *Petticoat Pipe Bracket*
46 *Exhaust Pipe Blower Connection*
47 *Blower Pipe Flange*
48 *Blower Pipe Flange Cap*
49 *Blower Pipe Union*
50 *Netting Basket*
51 *Smokebox Door Clamp*

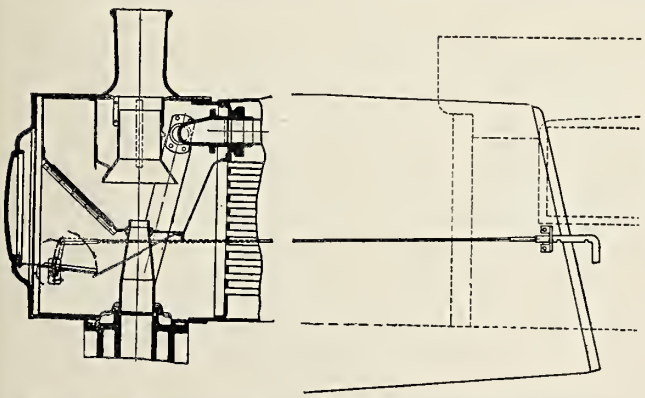

Fig. 363—Smokebox with Draft Regulating Damper in Closed Position; Buffalo, Rochester & Pittsburgh Ry.

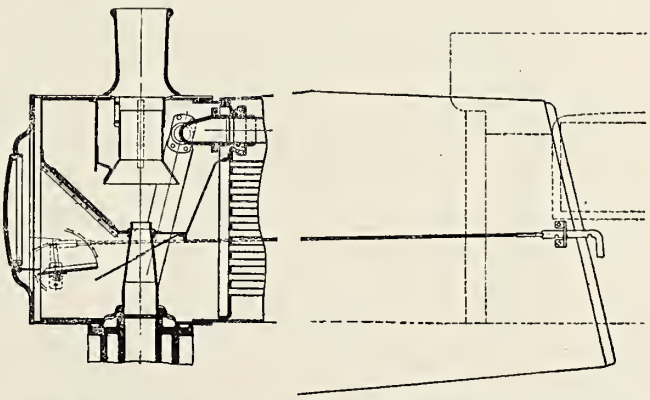

Fig. 364—Smokebox with Draft Regulating Damper Partly Open; Buffalo, Rochester & Pittsburgh Ry.

The Damper Arrangement Shown in Figs. 363-364 is for the Purpose of Regulating or Entirely Shutting Off the Draft. This Makes it Unnecessary to Open the Fire Door When the Engine is Standing, or While Drifting, and Thus Prevents the Chilling of Flues and Firebox, as Well as a Waste of Fuel Due to Incomplete Combustion.

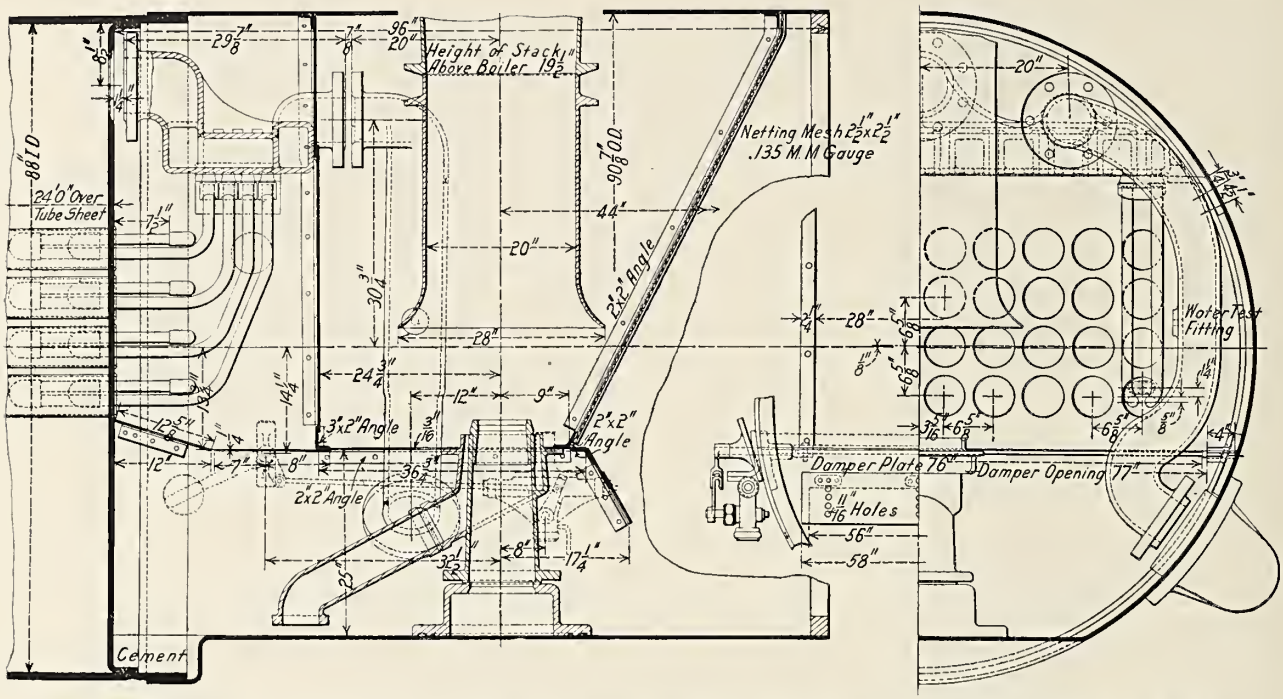

Fig. 365—General Arrangement of Smokebox with Schmidt Superheater and Inside Stack for Mallet Articulated (0-8-8-0) Compound Locomotive. Also Shows the Method of Combining the Emergency or High Pressure Exhaust Pipe with the Low Pressure Exhaust Pipe. Built for the Baltimore & Ohio by the American Locomotive Co.

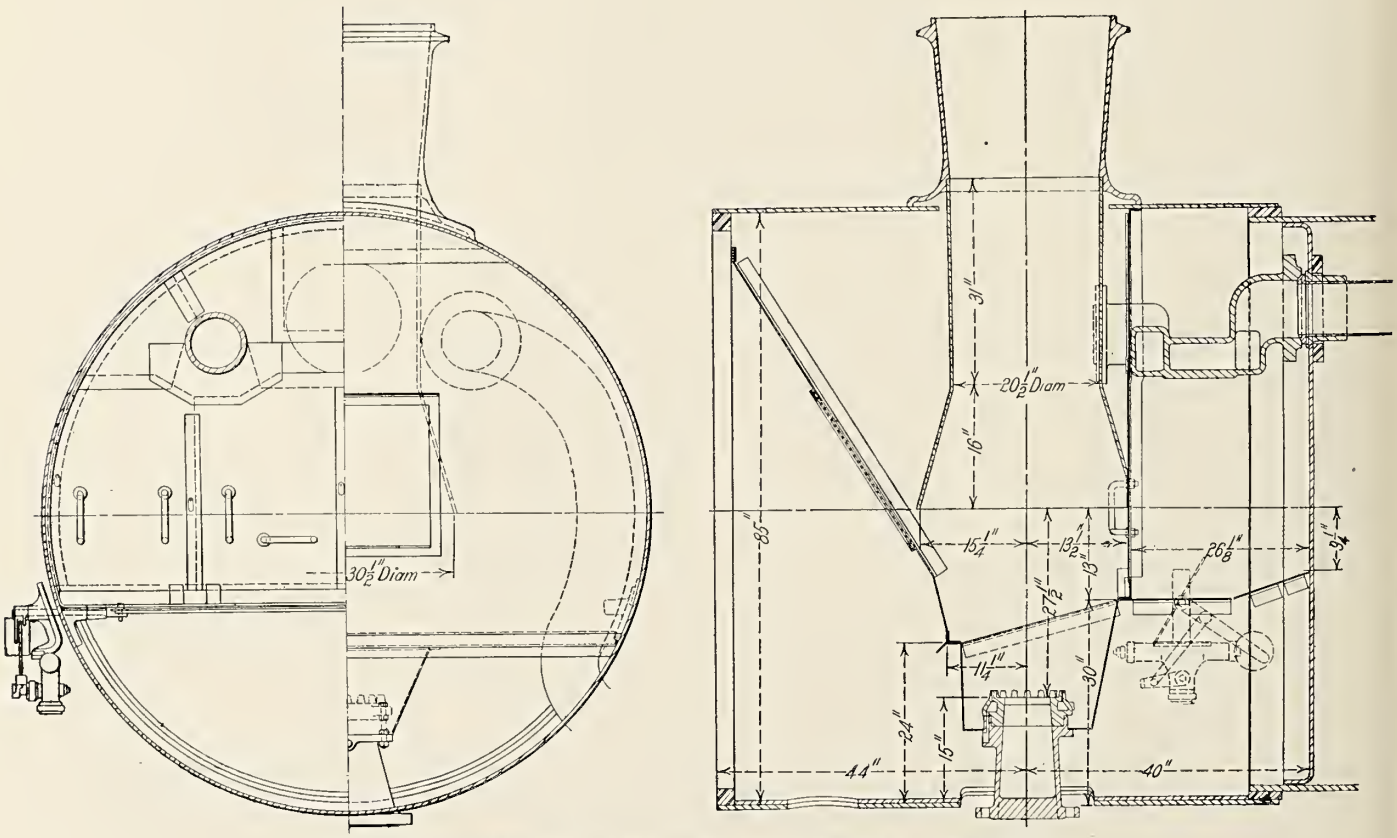

Fig. 366—Smokebox with Low Nozzle; Central of Georgia.

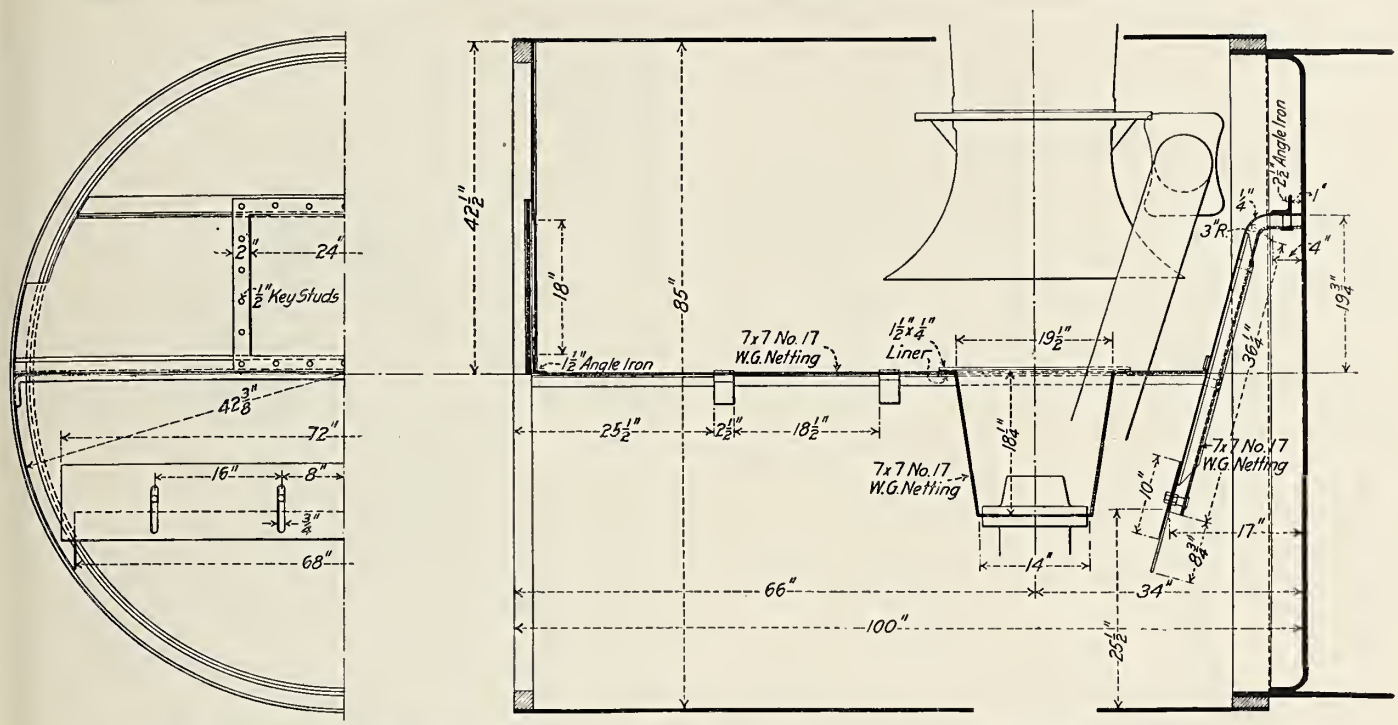

Fig. 367—General Arrangement of Smokebox for Lignite Burning Mikado (2-8-2) Locomotive. Built for the Oregon Railroad & Navigation Company by the Baldwin Locomotive Works.

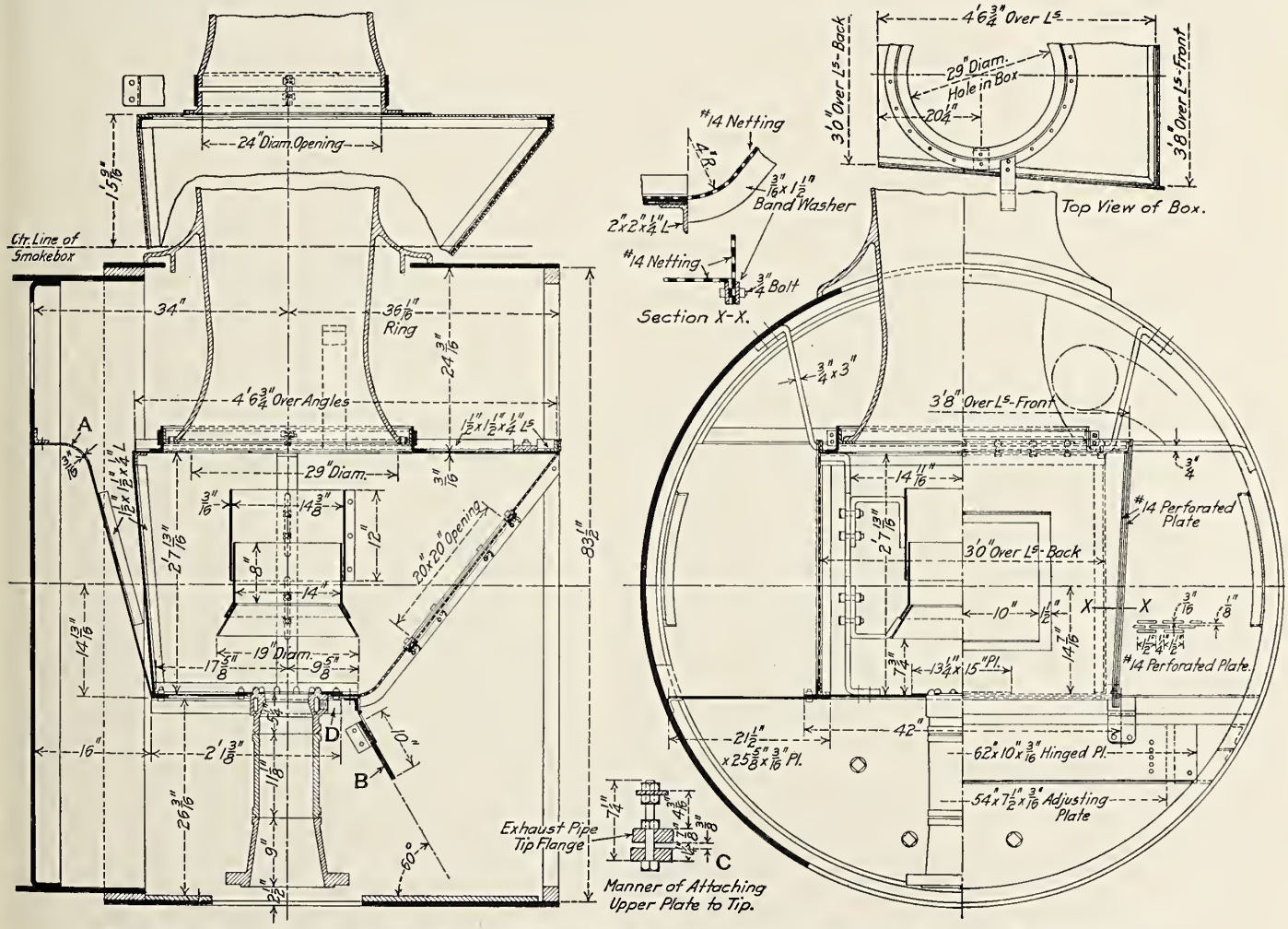

Fig. 368—Mudge-Slater Removable Box Front End as Applied to a Chicago & North Western Consolidation Locomotive; Mudge & Company.

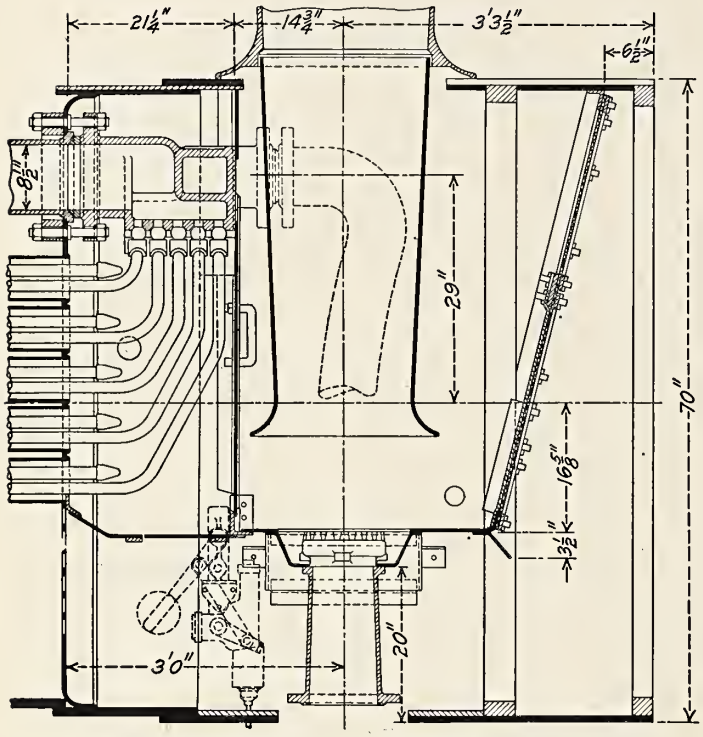

Fig. 369—Arrangement of Smokebox; Pennsylvania Railroad Pacific and Mikado Type Locomotives.

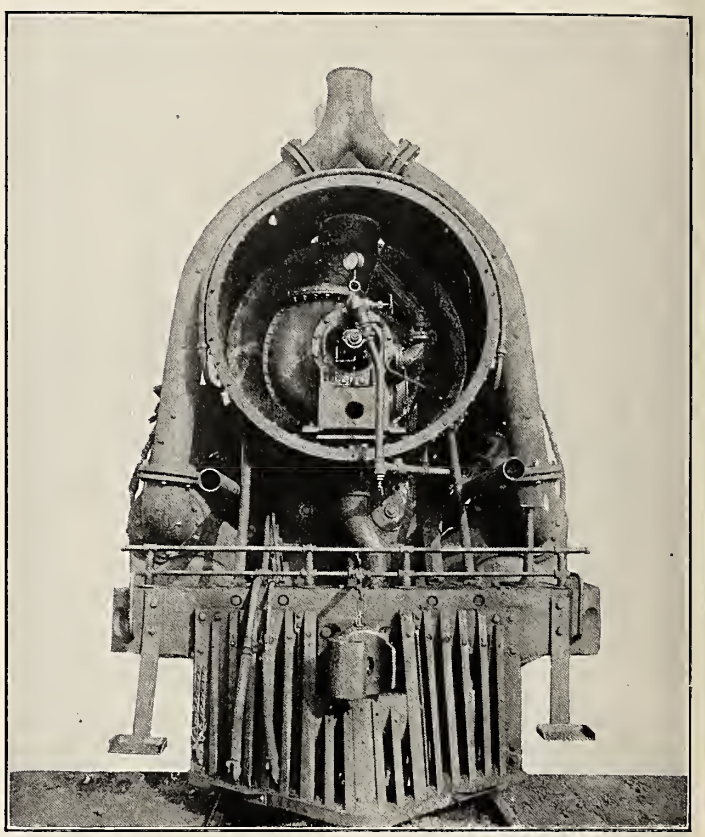

Fig. 370—Smokebox of a Locomotive Fitted with the MacFarland Fan Draft; Atchison, Topeka & Santa Fe.

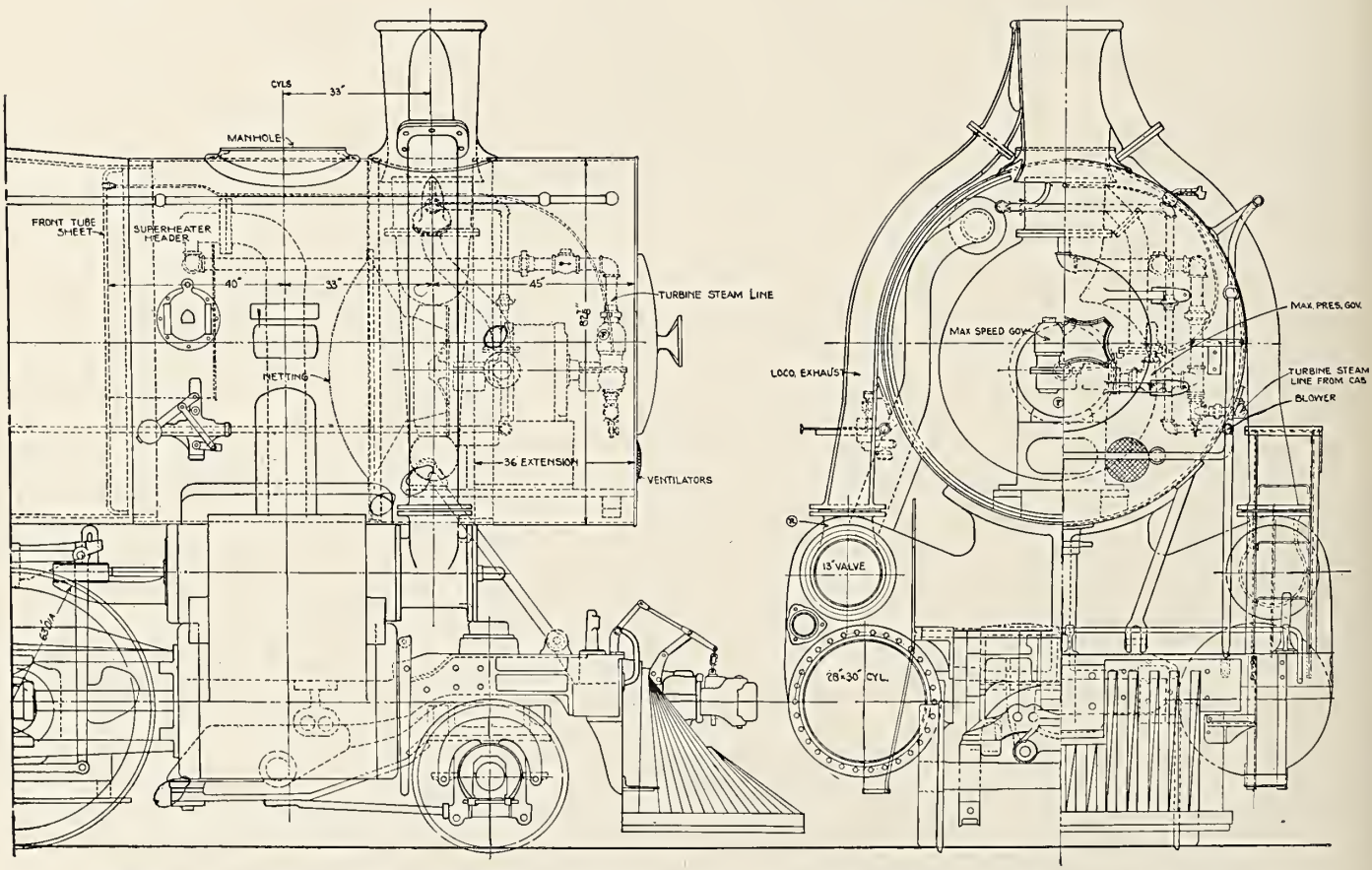

Fig. 371—Arrangement of the MacFarland Fan Draft as Applied to a Mikado Type Locomotive; Atchison, Topeka & Santa Fe.

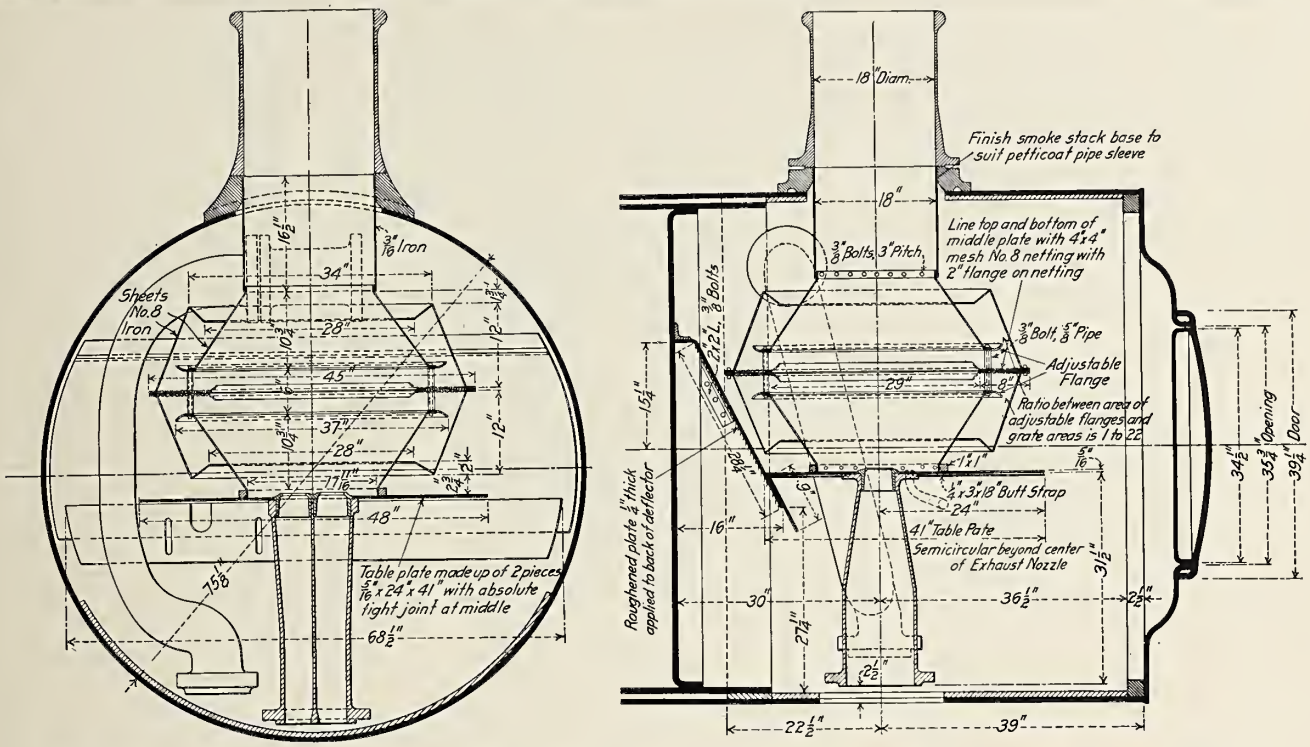

Fig. 372—General Arrangement of the Brooks Spark Arrester as Applied to Chicago, Milwaukee & Puget Sound Locomotives.

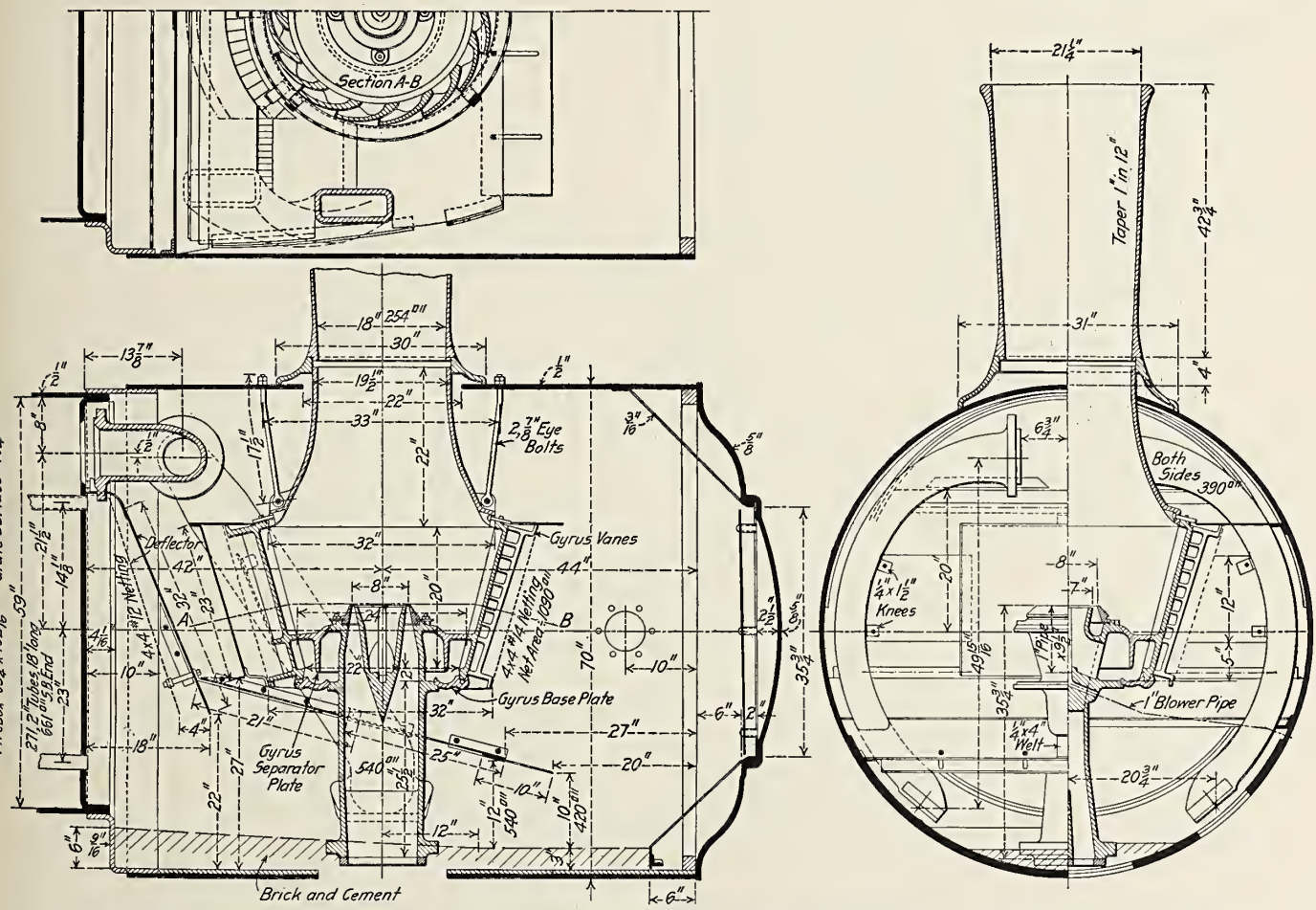

Fig. 373—Gyrus Spark Arrester Applied to Smokebox of a Pacific Type (4-6-2) Locomotive; Chicago & North Western.

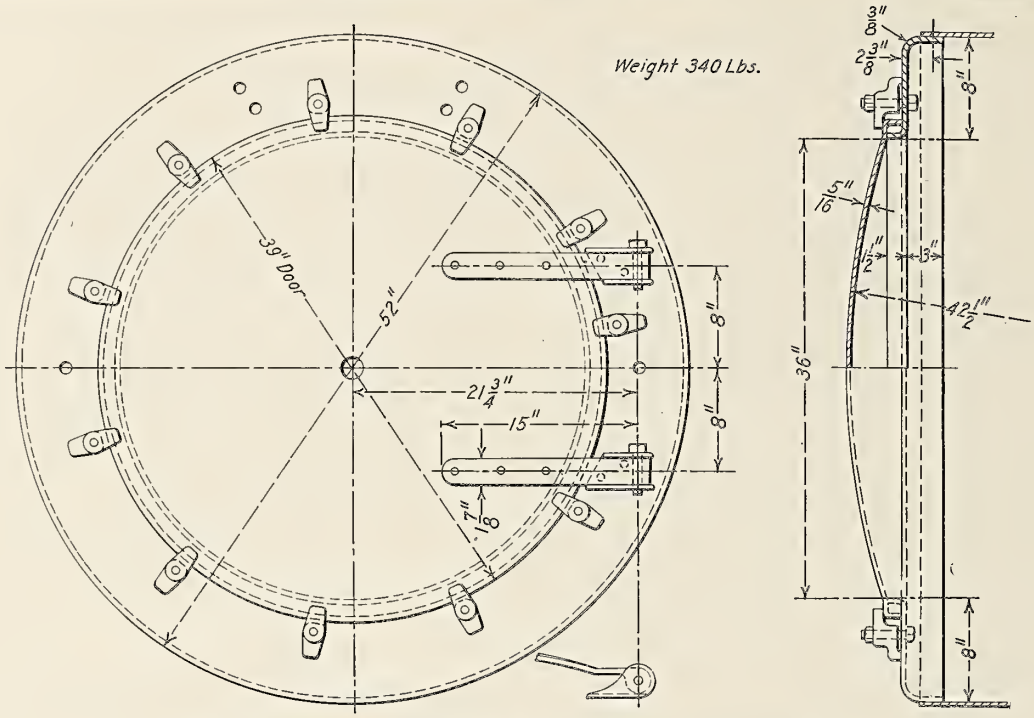

Fig. 374—Smokebox Front; Baldwin Locomotive Works.

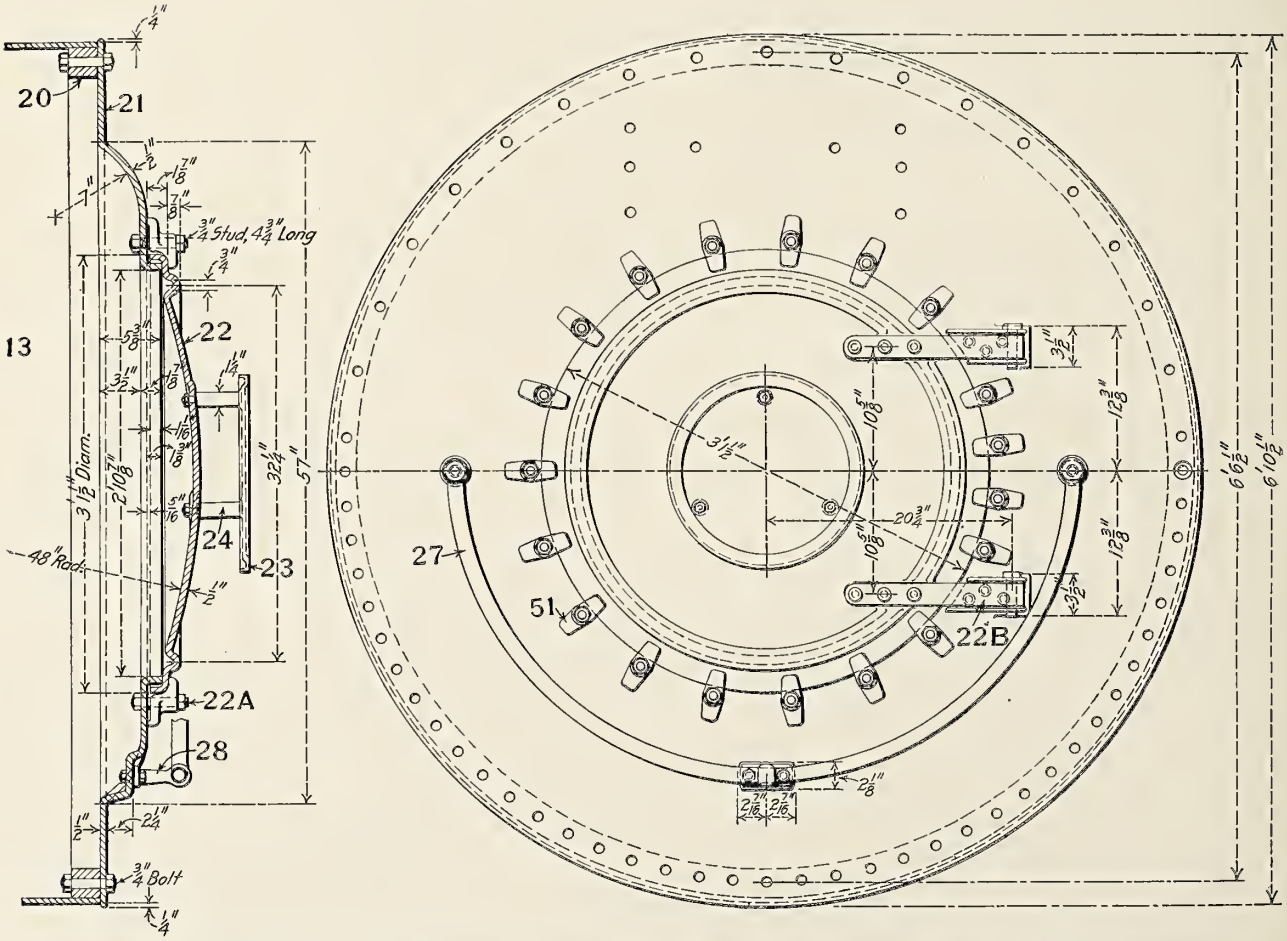

Fig. 375—Pressed Steel Smokebox Front and Door for Class E-6 Atlantic Type (4-4-2) Locomotive; Pennsylvania Railroad.

Numbers Refer to Names of Parts on Page 299.

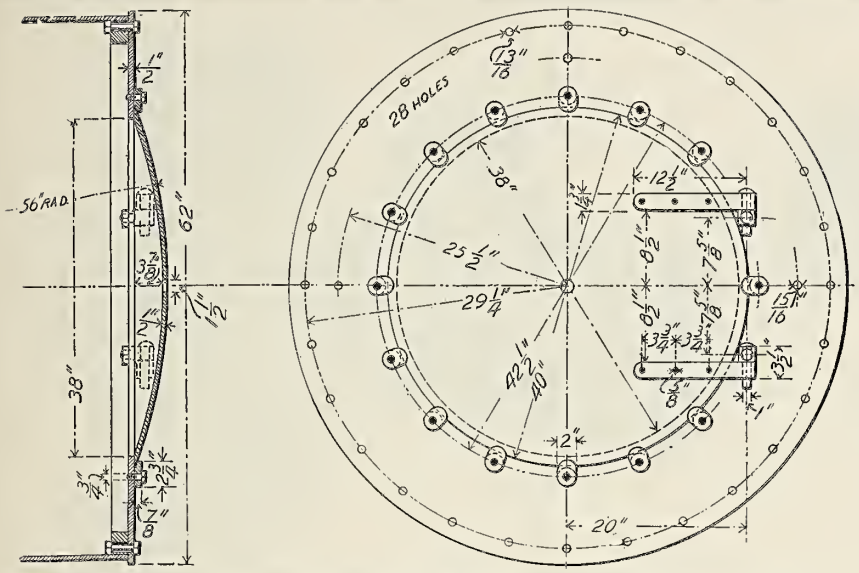

Fig. 376—Pressed Steel Smokebox Front and Door; Baldwin Locomotive Works.

Fig. 377—Hand Rail Post on Smokebox Front.

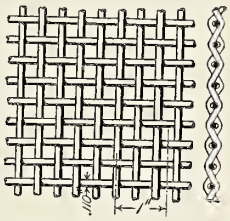

Fig. 378—Smokebox Netting, 2½ Mesh, .134 Wire.

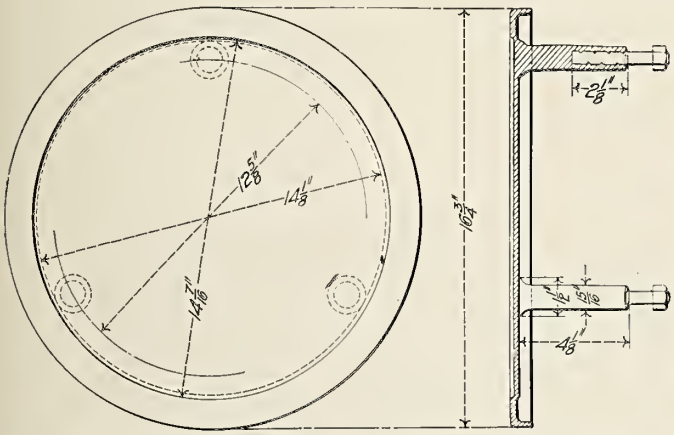

Fig. 379—Standard Front End Number Plate; Pennsylvania Railroad.

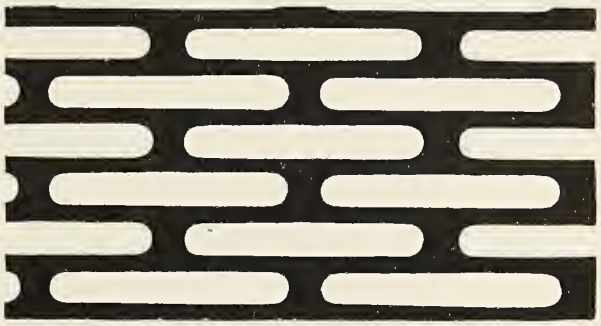

Fig. 380—Smokebox Perforated Plate, 3/16 in. x 1½ in. Openings; Beckley Perforating Company.

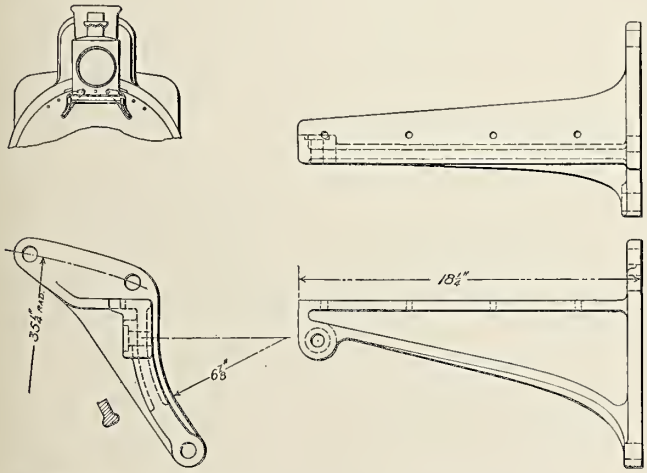

Fig. 381—Headlight Bracket; Pennsylvania Railroad.

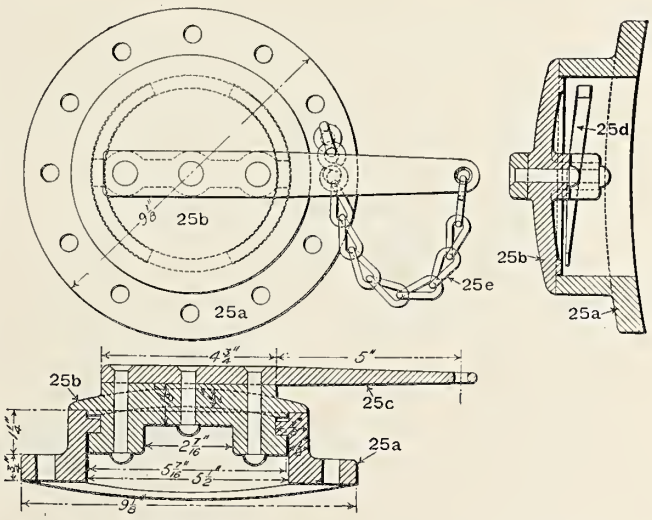

Fig. 382—Cleaning Hole Cover; Pennsylvania Railroad.

Numbers Refer to Names of Parts on Page 299.

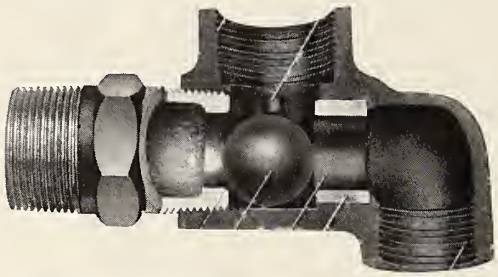

Fig. 383—Watertown Blower Pipe Drain Fitting; Watertown Specialty Company.

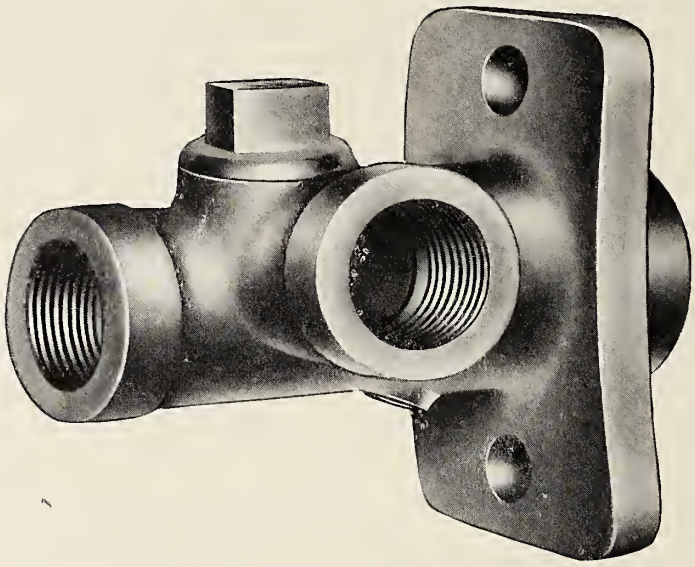

Fig. 385—Smokebox Fitting; Barco Brass & Joint Company.

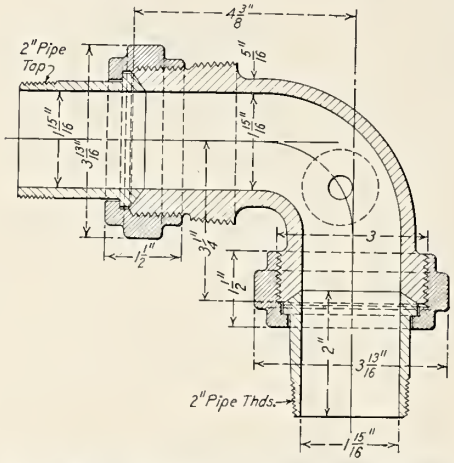

Fig. 384—Standard Smokebox Fitting; Baldwin Locomotive Works.

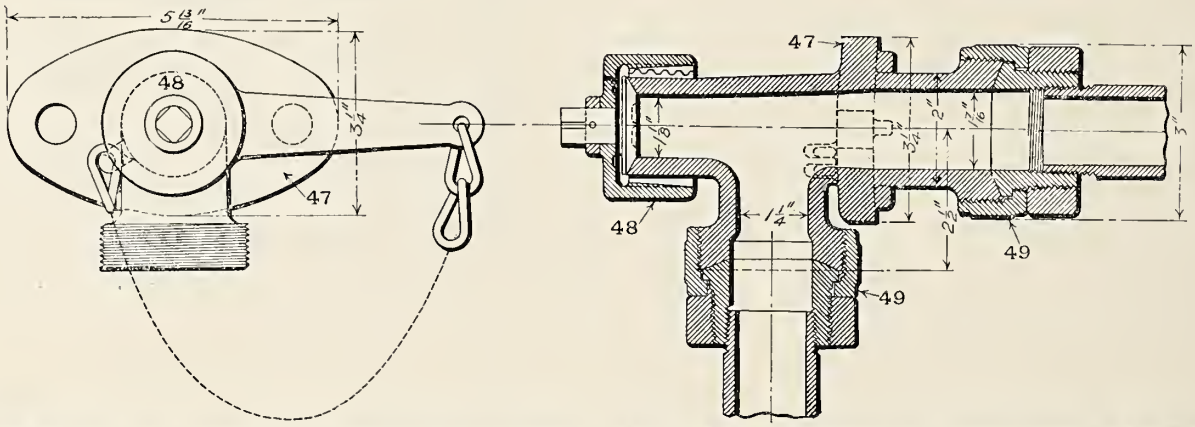

Fig. 386—1¼ in. Blower Pipe Connection for Atlantic Type (4-4-2) Locomotive; Pennsylvania Railroad.

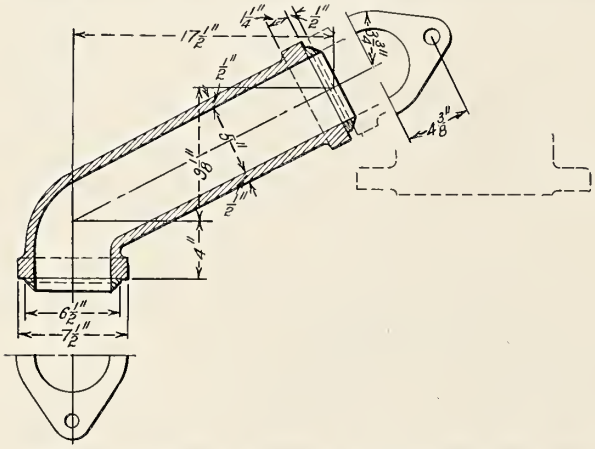

Fig. 387—Auxiliary Exhaust Pipe Connection for Mallet (0-8-8-0) Compound Locomotive.

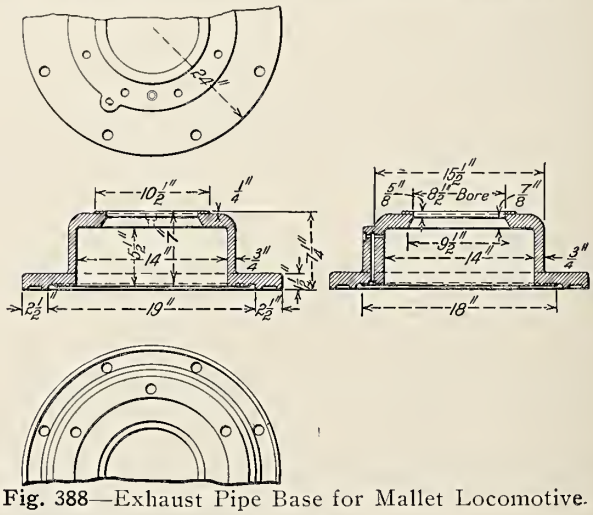

Fig. 388—Exhaust Pipe Base for Mallet Locomotive.

Built for the Baltimore & Ohio by the American Locomotive Company.

Numbers Refer to Names of Parts on Page 299.

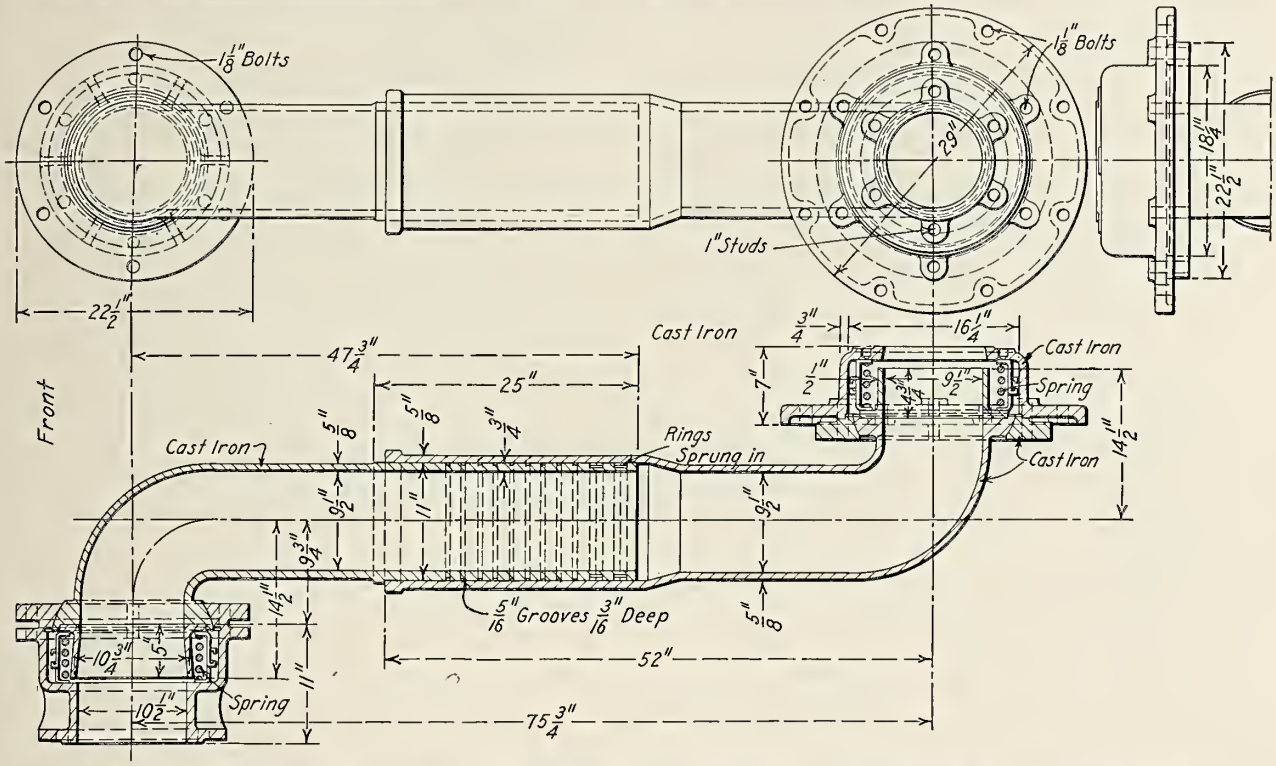

Fig. 389—Low Pressure Exhaust Pipe for Mallet Articulated Triplex (2-8-8-8-2) Locomotive. Built for the Erie by the Baldwin Locomotive Works.

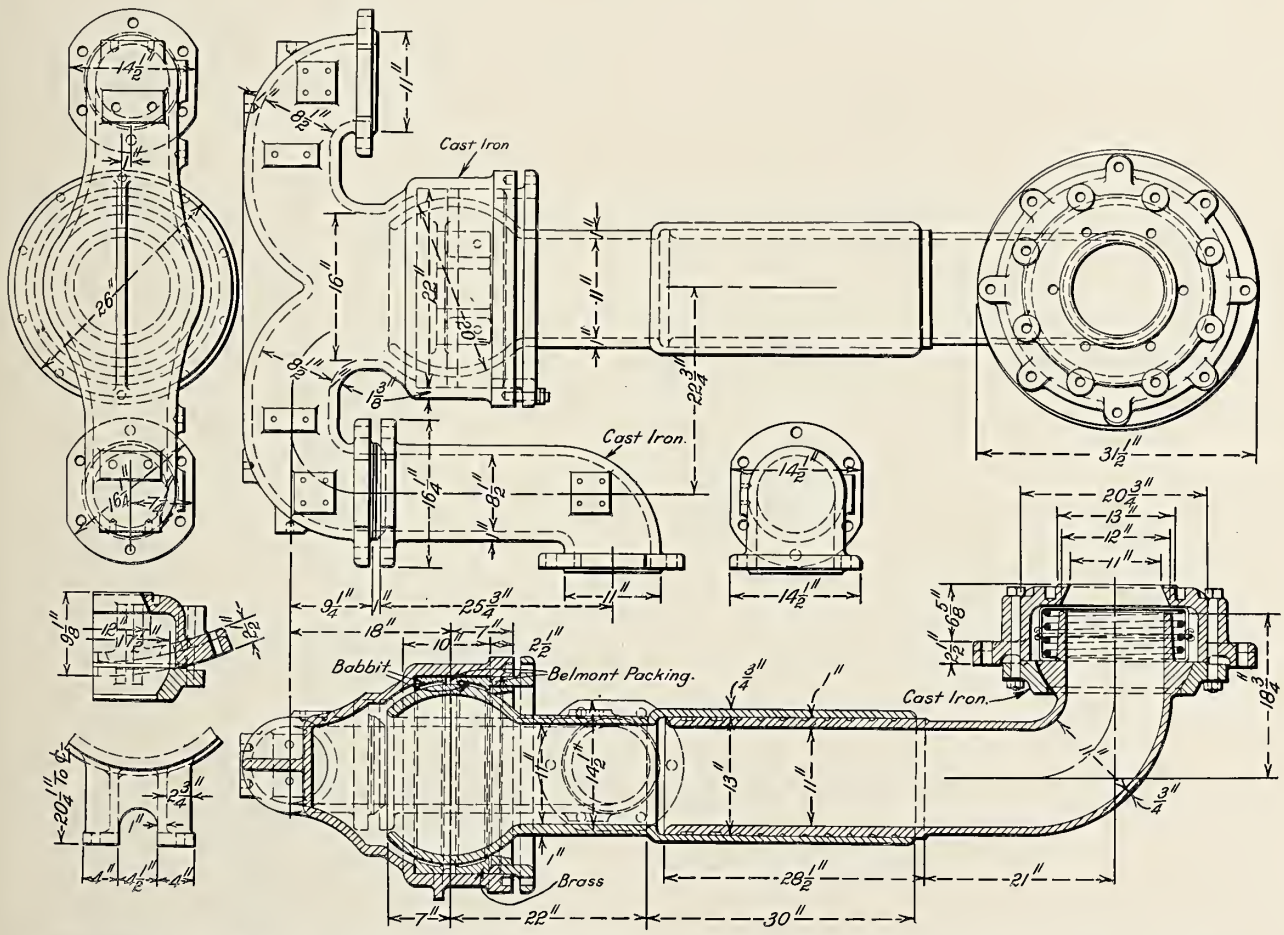

Fig. 390—Low Pressure Exhaust Pipe and Slip Joint for Mallet Articulated (2-8-8-2) Compound Locomotive. Built for the Chicago, Burlington & Quincy by the Baldwin Locomotive Works.

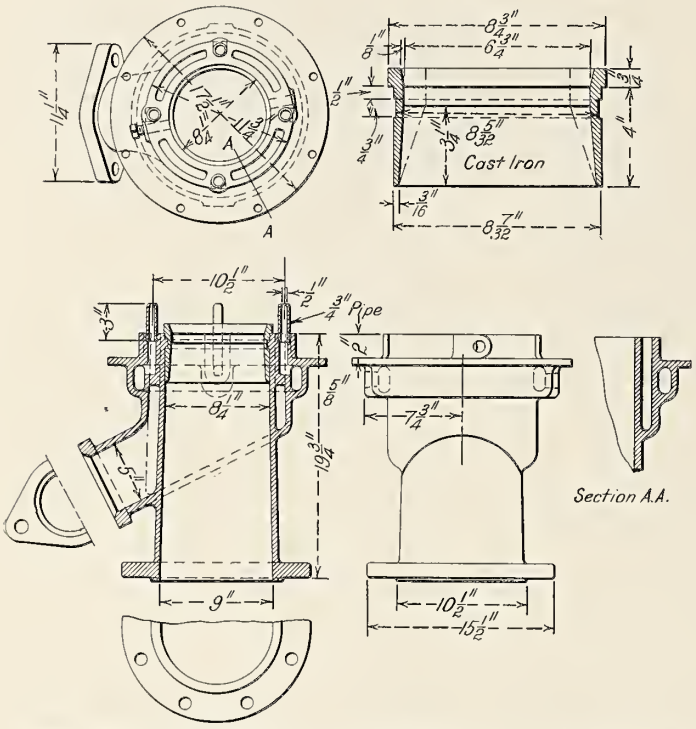

Fig. 391—Exhaust Pipe Combination and Nozzle Showing Arrangement of Blower Nozzles for Mallet Articulated (0-8-8-0) Compound Locomotive. Built for the Baltimore & Ohio by the American Locomotive Company.

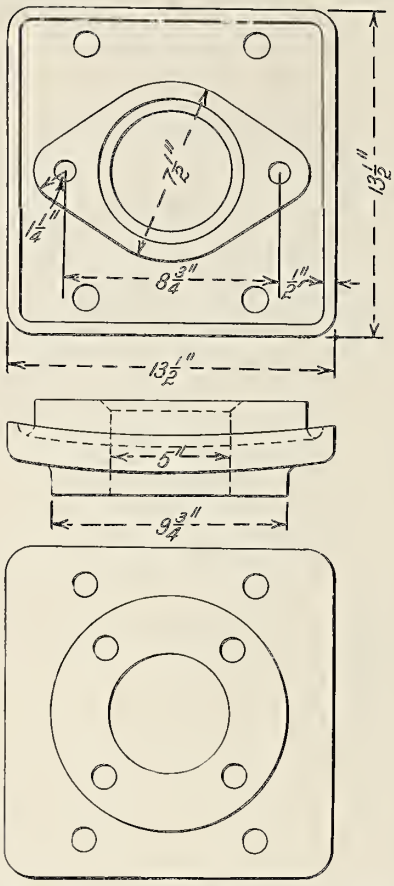

Fig. 392—Auxiliary Exhaust Pipe Connection at the Smokebox for Mallet Articulated (0-8-8-0) Compound Locomotive. Built for the Baltimore & Ohio by the American Locomotive Company.

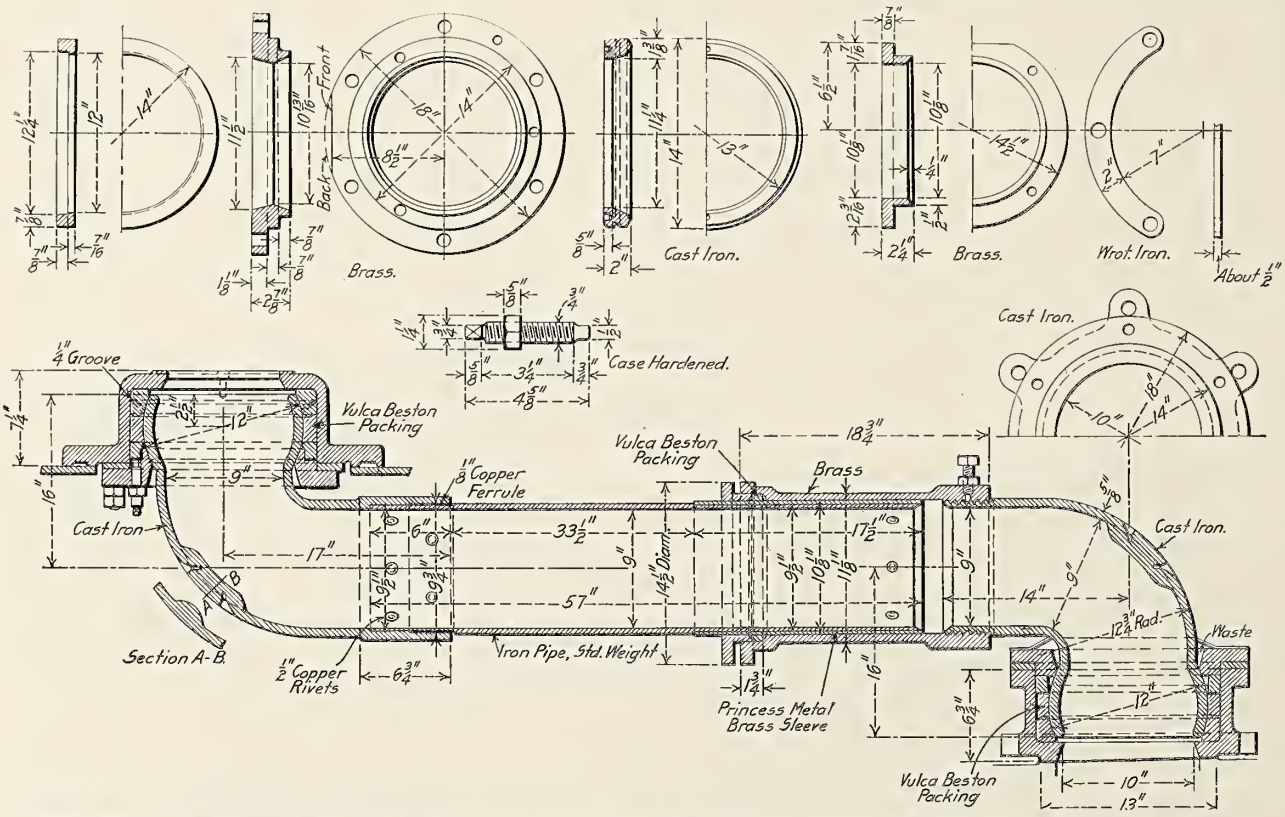

Fig. 393—Low Pressure Exhaust Pipe and Slip Joints for Mallet Articulated (0-8-8-0) Compound Locomotive. Built for the Baltimore & Ohio by the American Locomotive Company.

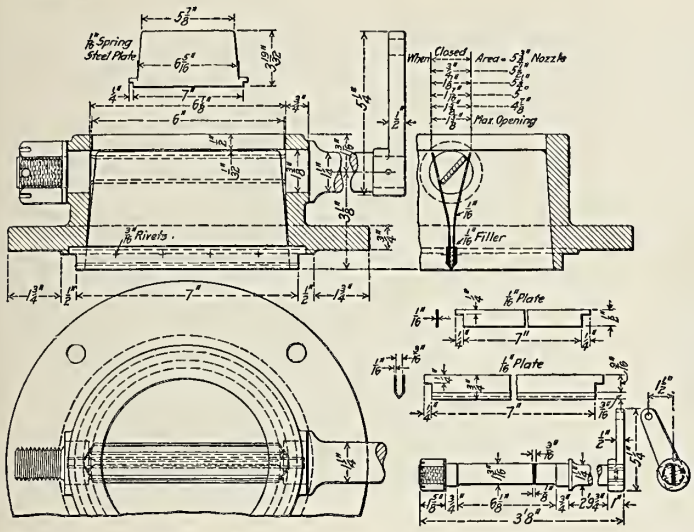

Fig. 394—Variable Exhaust Nozzle for Mallet Articulated (0-6-6-0) Simple Locomotive; Canadian Pacific.

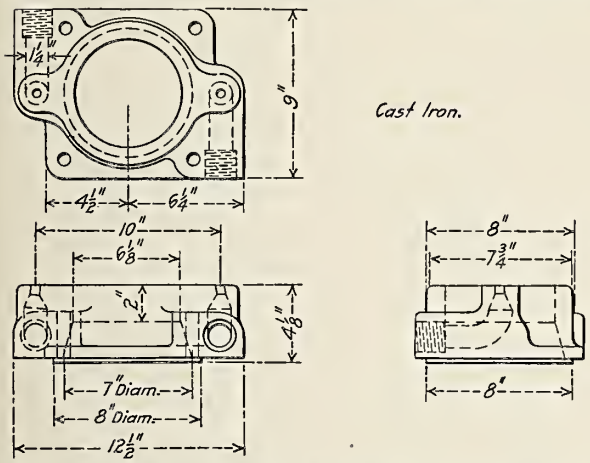

Fig. 395—Exhaust Nozzle for Pacific Type (4-6-2) Locomotive. Built for the New York Central & Hudson River by the American Locomotive Company.

(See Fig. 405 for exhaust pipe.)

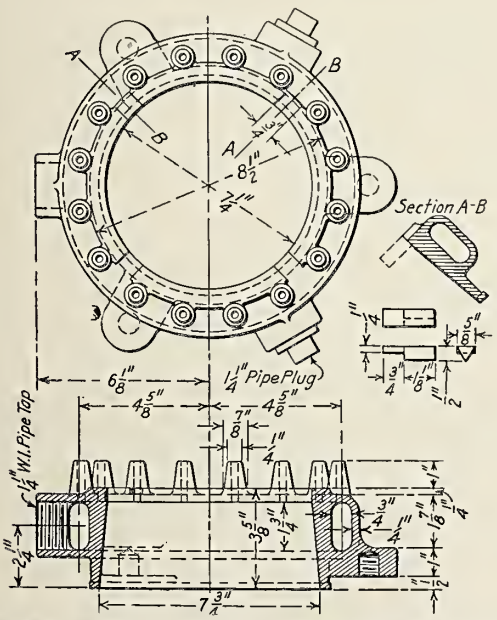

Fig. 397—Exhaust Nozzle; Pennsylvania Railroad.

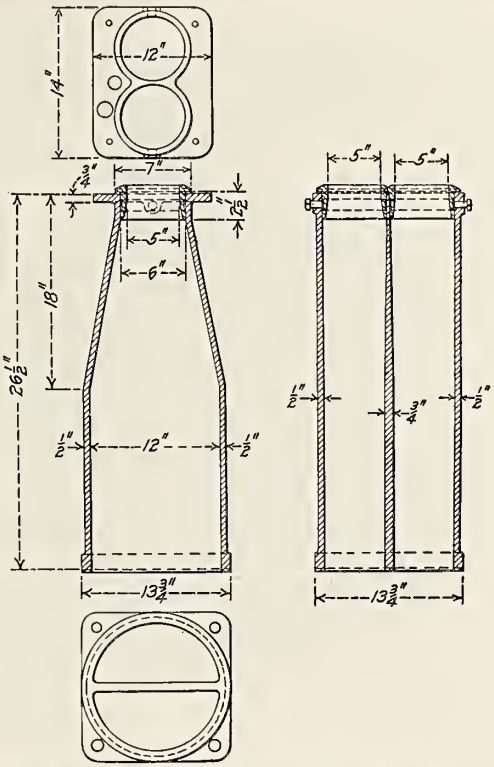

Fig. 396—Double Exhaust Pipe and Nozzles; Baldwin Locomotive Works.

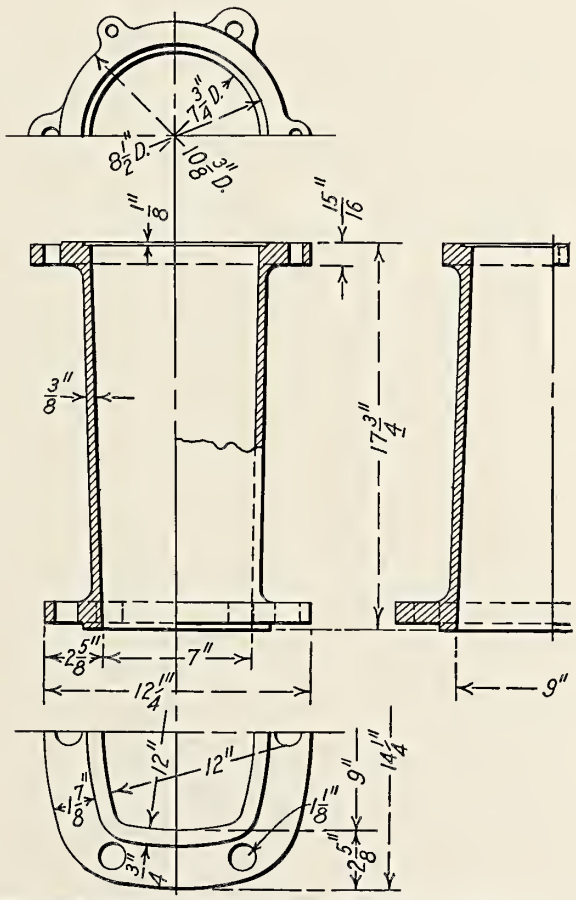

Fig. 398—Exhaust Pipe; Pennsylvania Railroad.

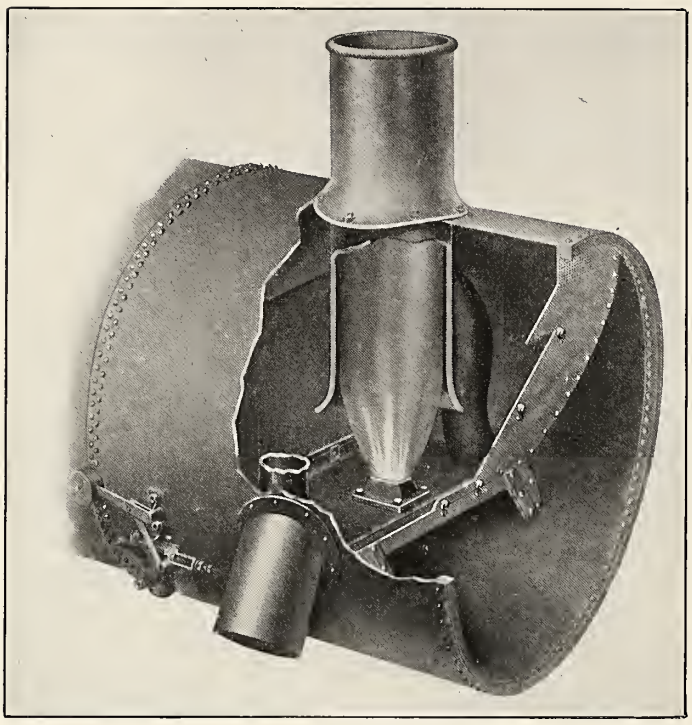

Fig. 399—Rectangular Exhaust Nozzle; Economy Devices Corporation.

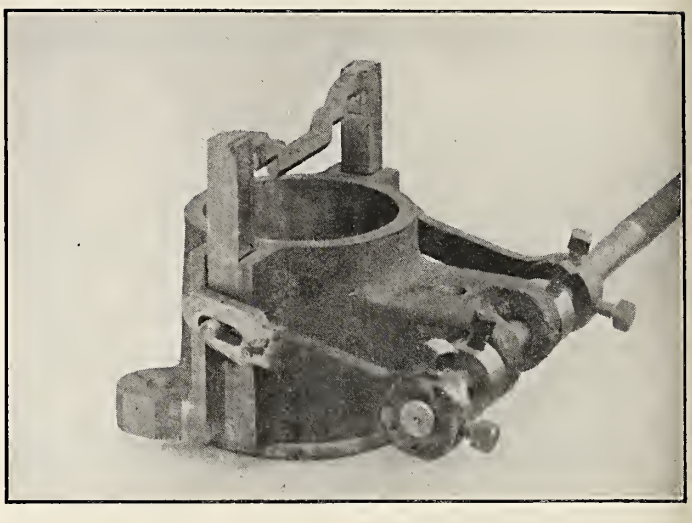

Fig. 400—Variable Exhaust Nozzle; Kansas City, Mexico & Orient.

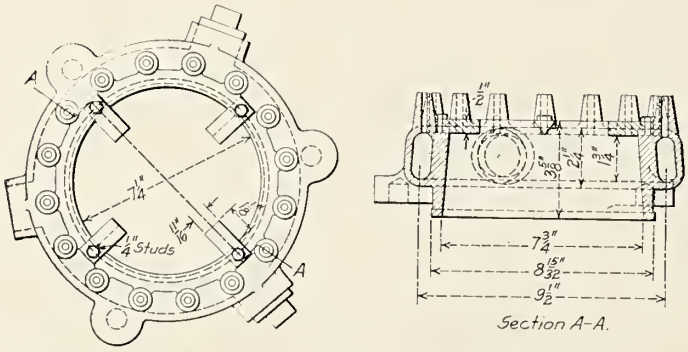

Fig. 401—Exhaust Nozzle with Internal Projections; Pennsylvania Railroad.

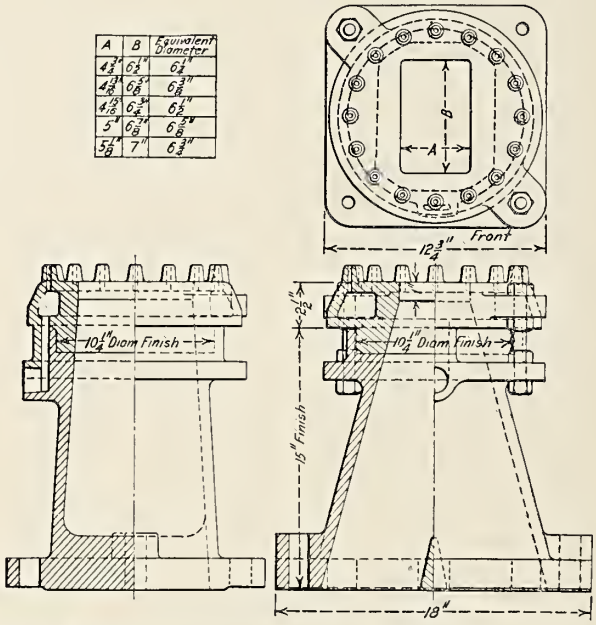

Fig. 402—Rectangular Exhaust Nozzle; Central of Georgia.

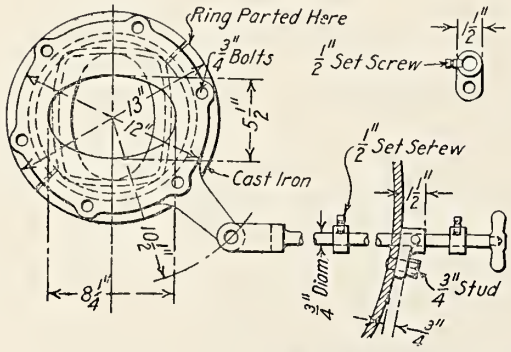

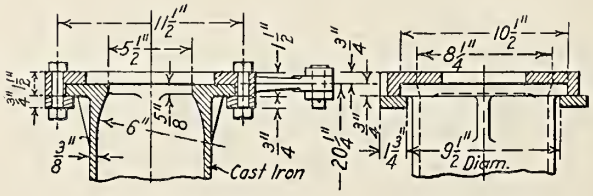

Fig. 403—Variable Exhaust Nozzle; Baldwin Locomotive Works.

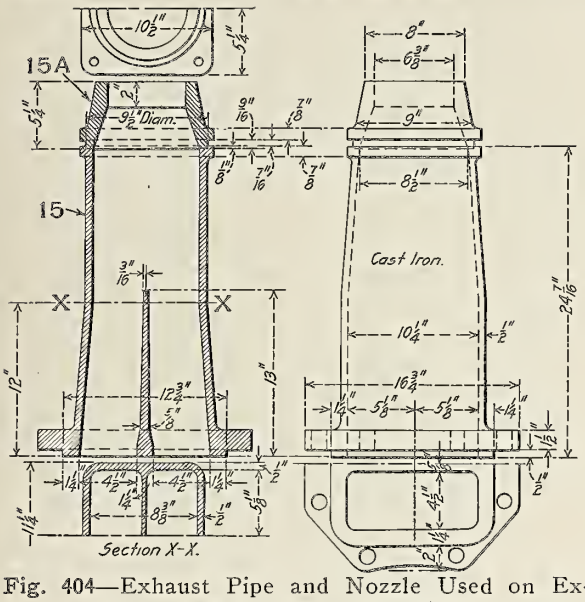

Fig. 404—Exhaust Pipe and Nozzle Used on Experimental Pacific Type (4-6-2) Locomotive No. 50,000; American Locomotive Company.

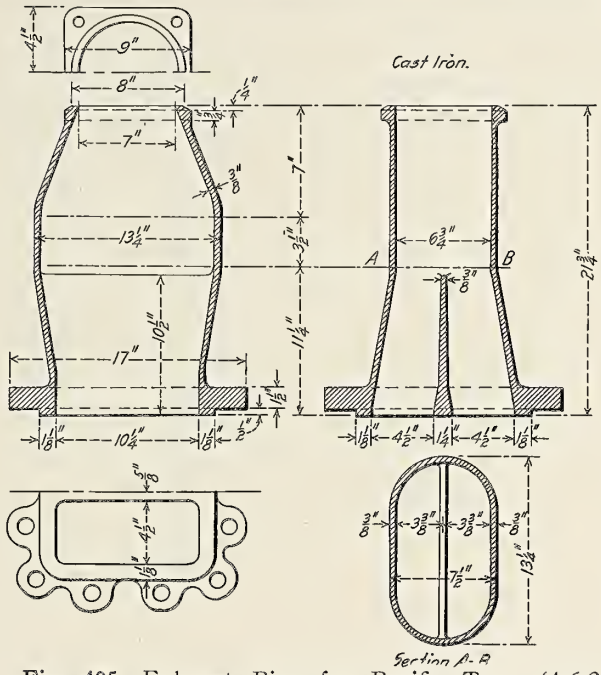

Fig. 405—Exhaust Pipe for Pacific Type (4-6-2) Locomotive. Built for the New York Central & Hudson River by the American Locomotive Company.

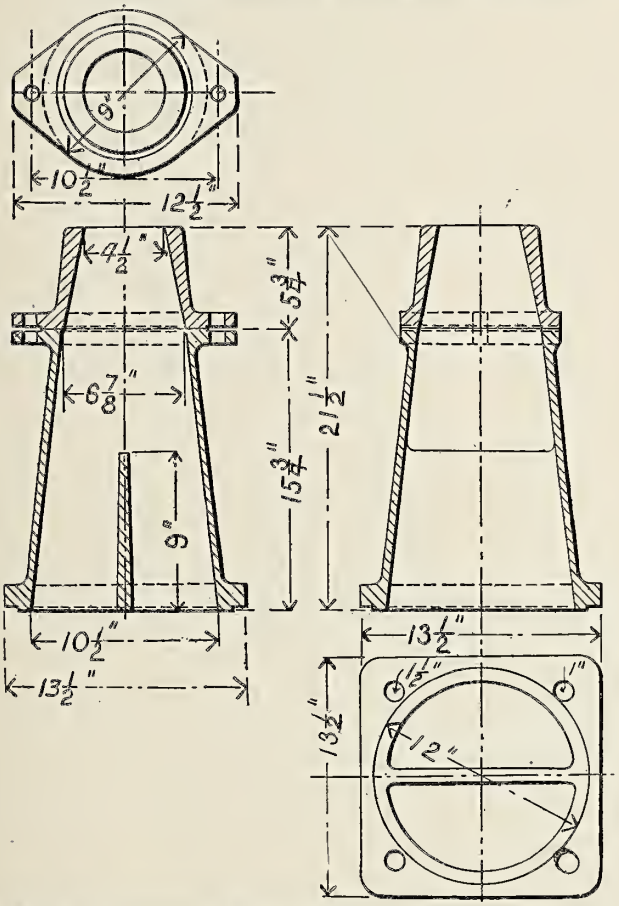

Fig. 406—Exhaust Pipe and Nozzle; Baldwin Locomotive Works.

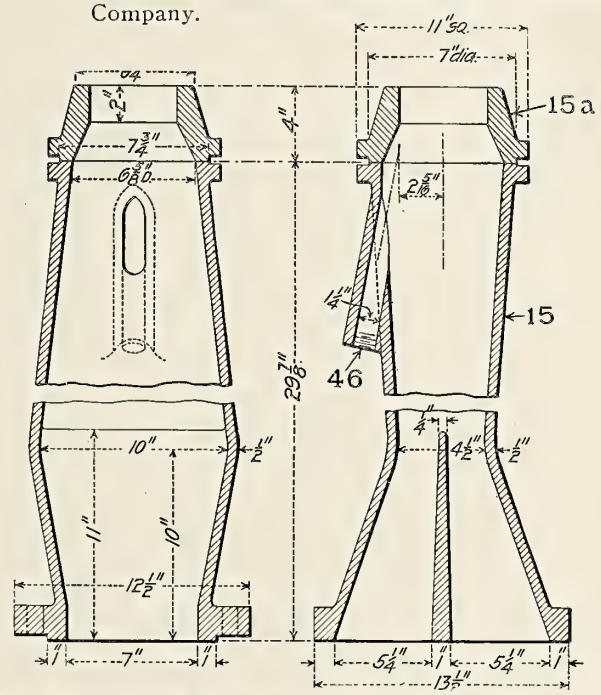

Fig. 407—Exhaust Pipe and Nozzle Showing Blower Pipe Connection; Southern Pacific.

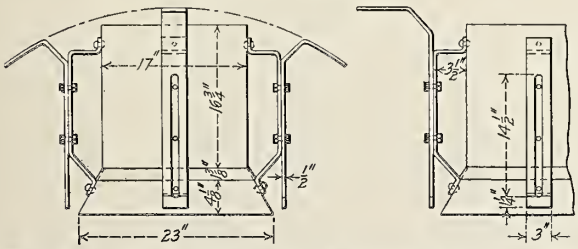

Fig. 408—Single Adjustable Petticoat Pipe; Baldwin Locomotive Works.

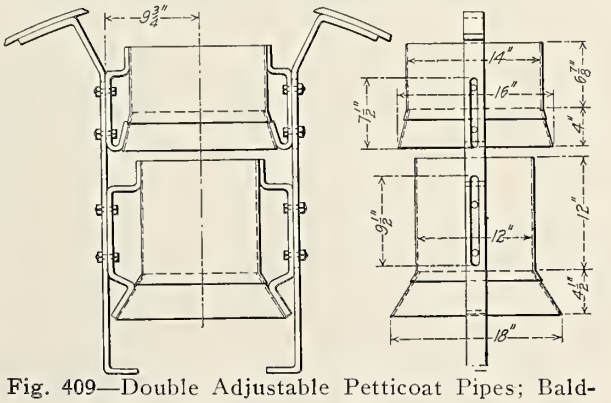

Fig. 409—Double Adjustable Petticoat Pipes; Baldwin Locomotive Works.

Numbers Refer to Names of Parts on Page 299.

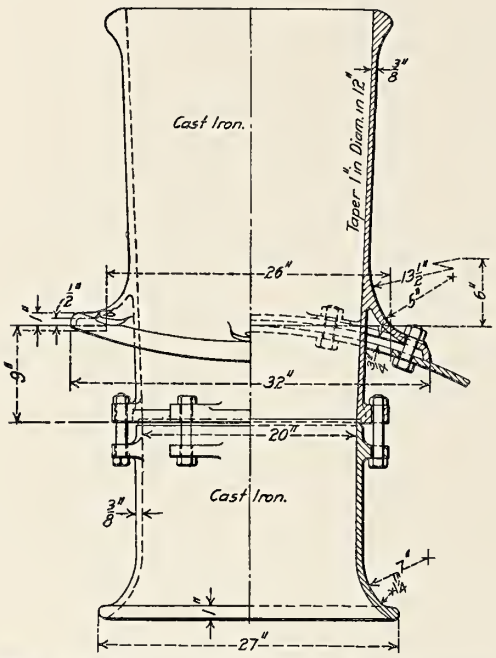

Fig. 410—Standard Cast Iron Taper Smoke Stack with Inside Extension; American Locomotive Company.

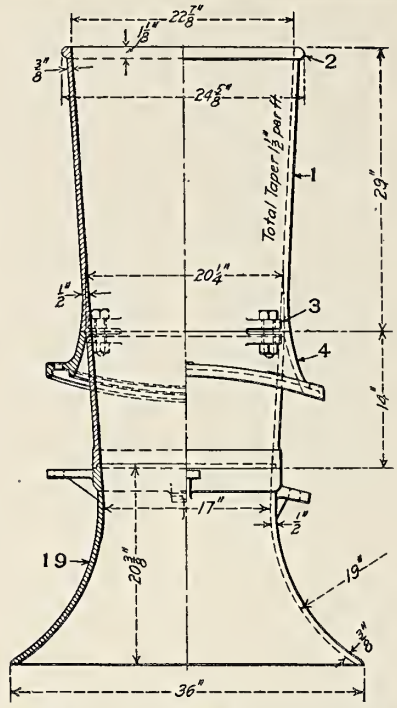

Fig. 411—Cast Iron Taper Smoke Stack with Inside Extension; Baldwin Locomotive Works.

Names of Parts of Smoke Stacks, Figs. 411-420.

1 *Barrel*
2 *Bead or Nosing*
3 *Base Lug*
4 *Base*
5 *Lift Pipe or Inside Stack*
7 *Cap*
8 *Netting Brace Hinge*
9 *Netting Brace*
10 *Netting Latch*
11 *Netting Latch Staple*
12 *Cone*
13 *Cone Support*
14 *Netting Angle*
16 *Base Ring*
17 *Bottom Flare*
18 *Top Flare*
19 *Inside Stack*
20 *Hood or Deflector*
21 *Hood Operating Cylinder*
22 *Hood Operating Cylinder Piston Rod*
23 *Hood Rack*
24 *Hood Pinion*
25 *Hood Support*

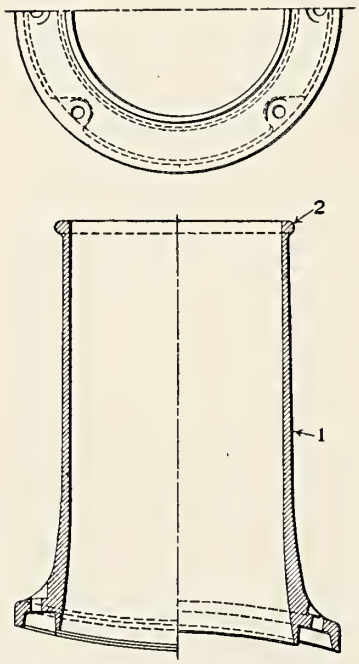

Fig. 412 — Cast Iron Straight Stack; American Locomotive Company.

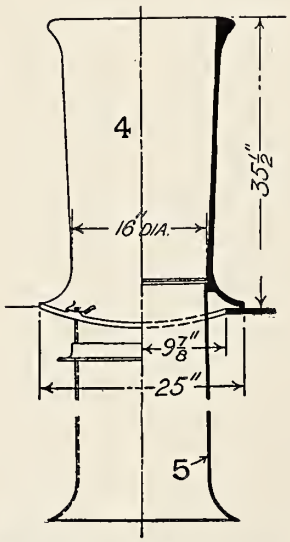

Fig. 413—Cast Iron Taper Stack with Wrought Iron Lift Pipe; Pennsylvania Railroad.

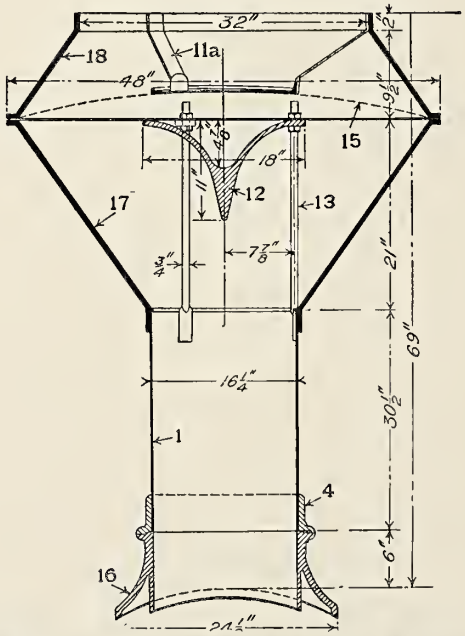

Fig. 414—Diamond Stack for Wood Burning Locomotive.

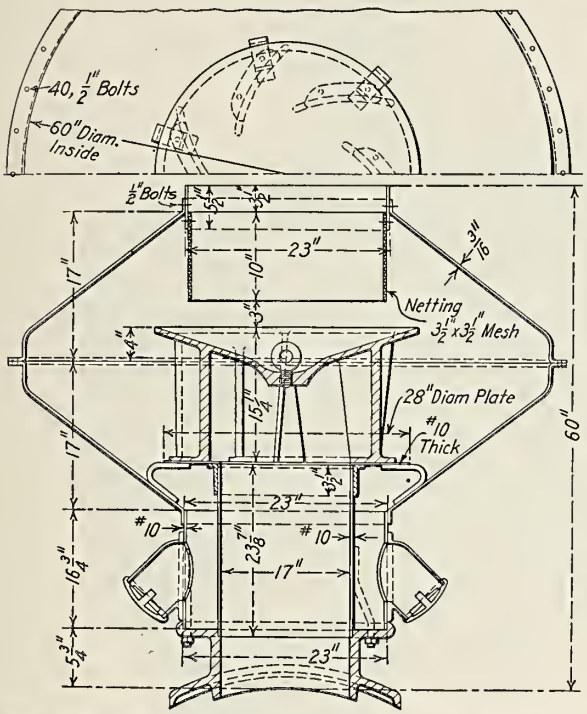

Fig. 415—Radley & Hunter Smoke Stack for Wood Burning Locomotives; Baldwin Locomotive Works.

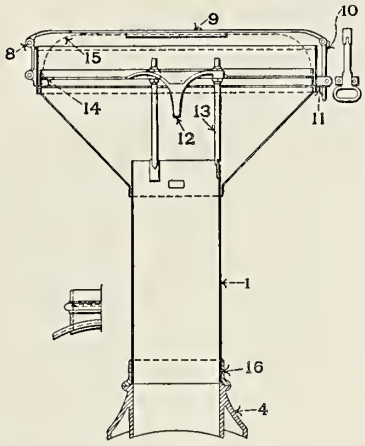

Fig. 416—Smoke Stack Designed for Wood Burning Locomotive; Baldwin Locomotive Works.

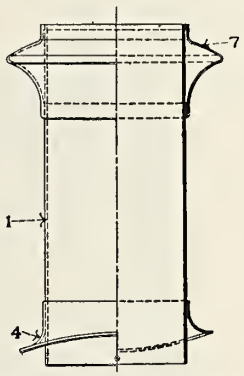

Fig. 417—Wrought Iron Straight Smoke Stack; Baldwin Locomotive Works.

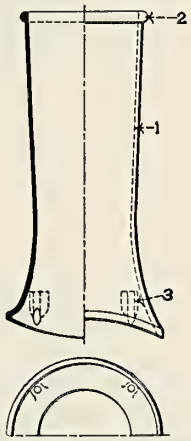

Fig. 418—Cast Iron Taper Smoke Stack; Baldwin Locomotive Works.

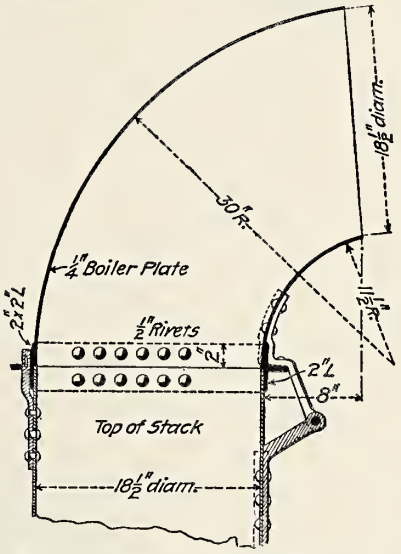

Fig. 419—Smoke Stack Hood or Deflector; Great Northern.

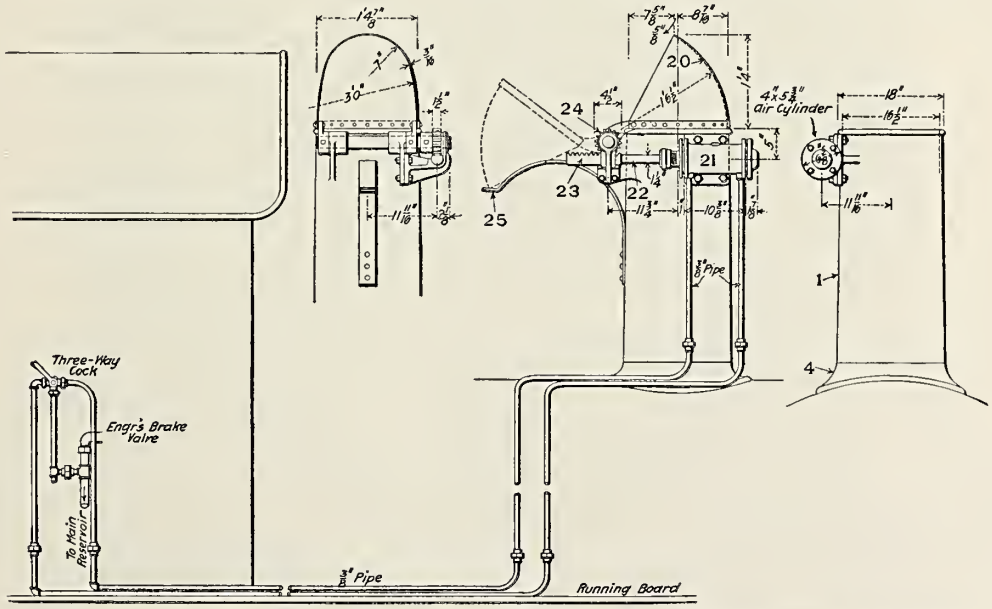

Fig. 420—Pneumatically Operated Smoke Deflector; Denver, Northwestern & Pacific.

Numbers Refer to Names of Parts on Page 312.

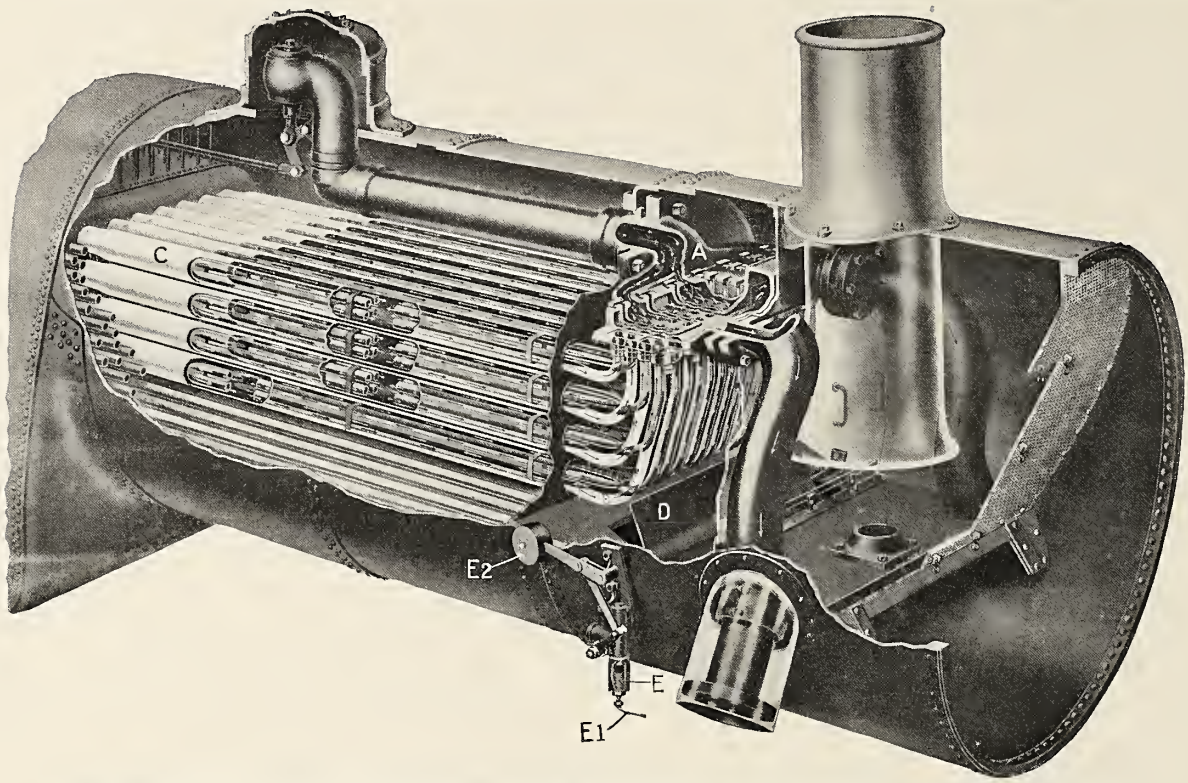

Fig. 421—Type "A" Top Header Fire Tube Superheater; Locomotive Superheater Company.

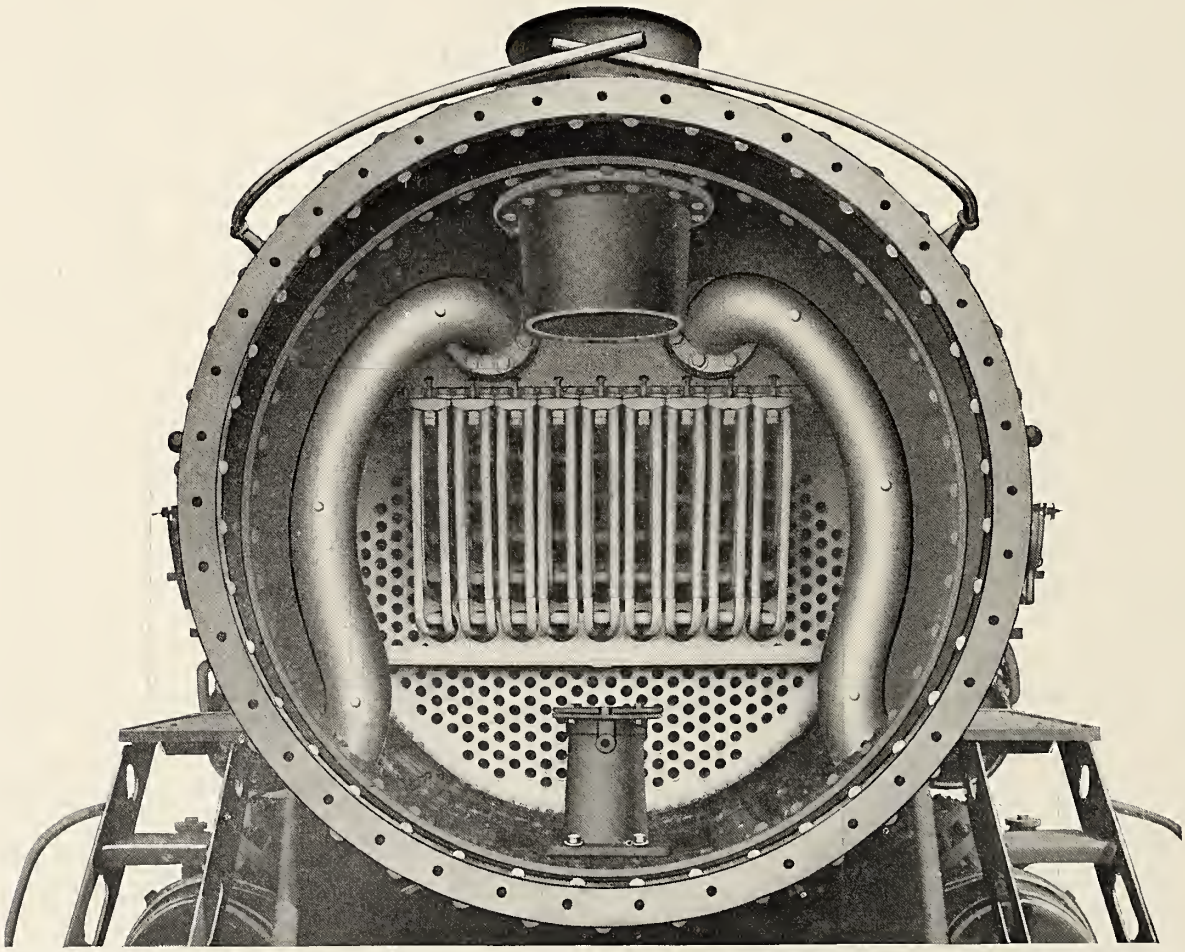

Fig. 422—Type "A" Top Header Fire Tube Superheater Applied to a Locomotive Equipped with Outside Steam Pipes; Locomotive Superheater Company.

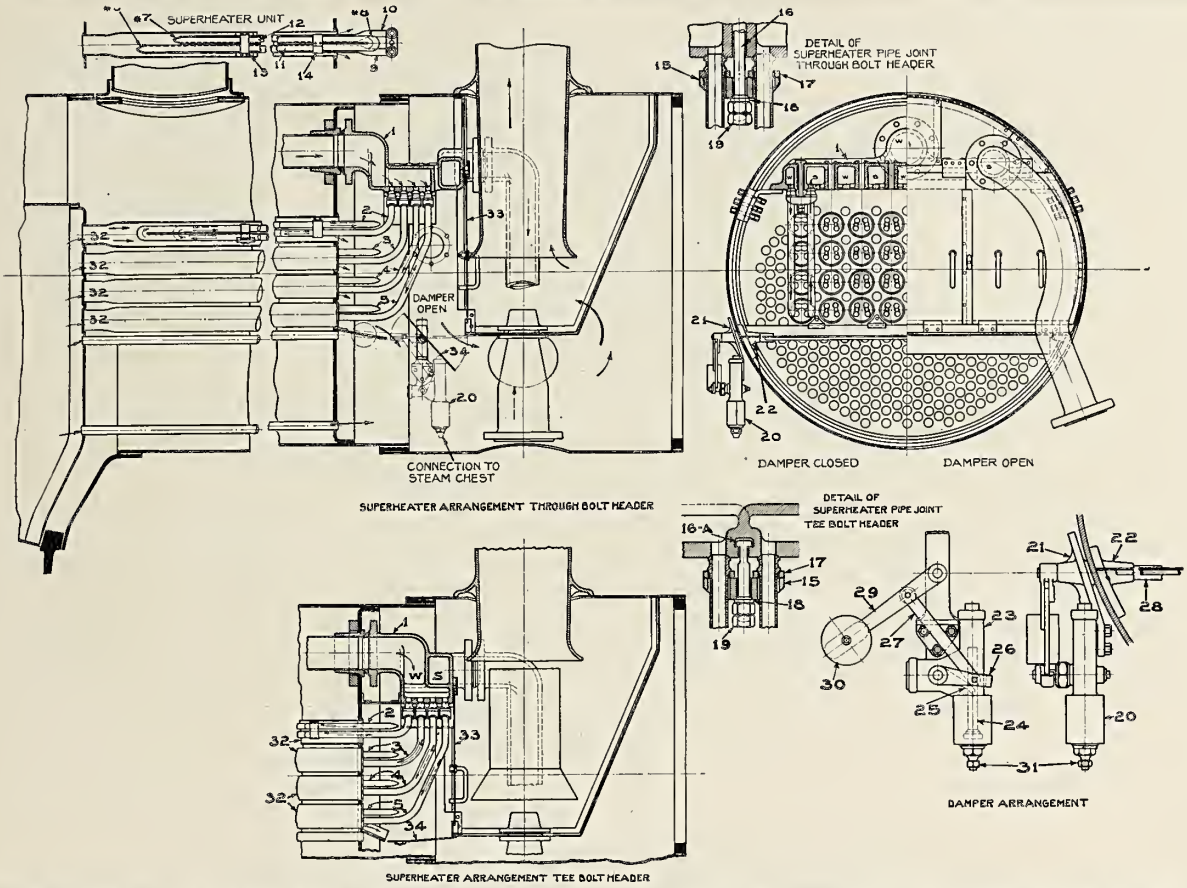

Fig. 423—Type "A" Top Header Superheater Showing Different Methods of Connecting Units to the Header and Details of Damper Cylinder. Upper Illustration Shows Through Bolt Connection and Lower Illustration Tee Bolt Connection; Locomotive Superheater Company.

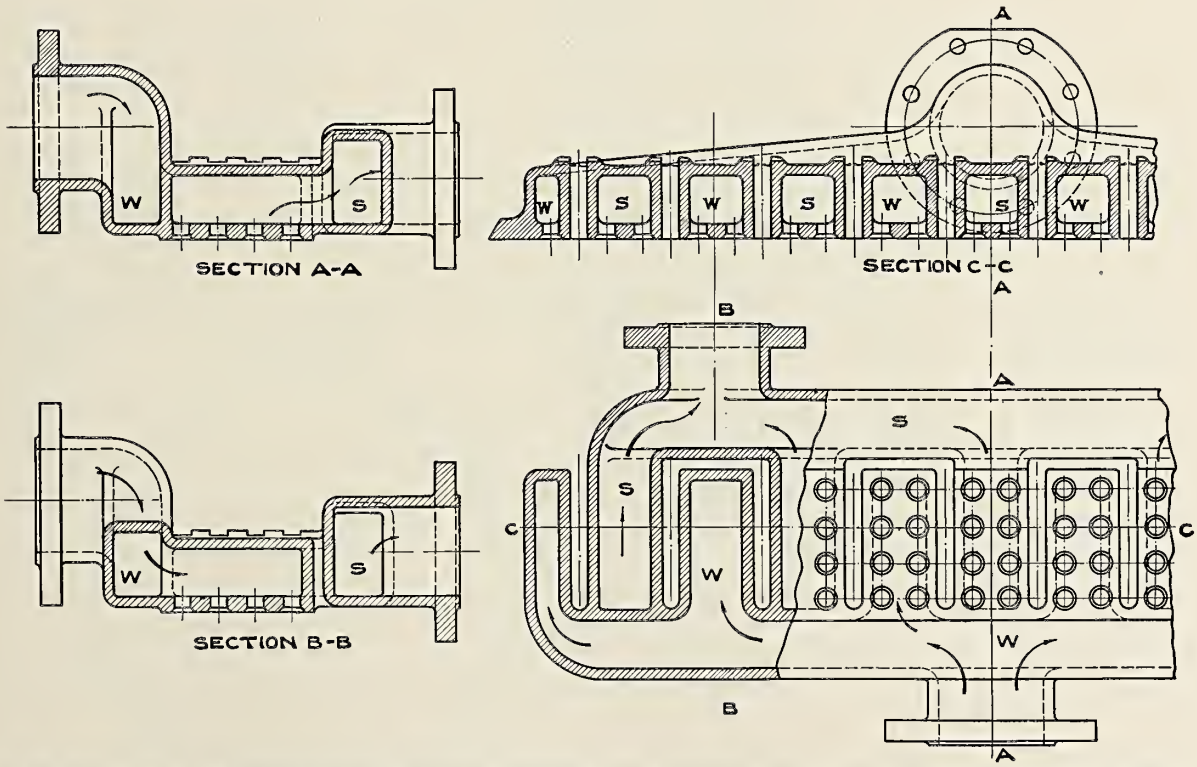

Fig. 424—Type "A" Superheater Header Arranged for Through Bolt Connections; Locomotive Superheater Company.

Numbers Refer to Names of Parts on Page 316.

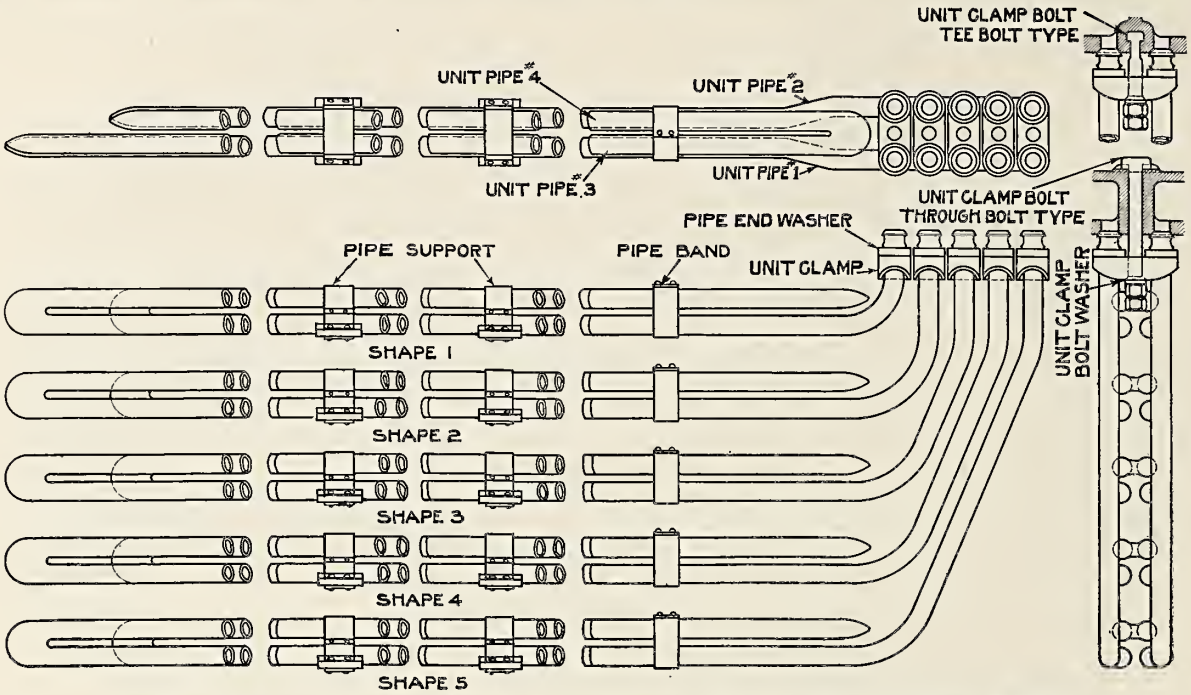

Fig. 425—Vertical Row of Type "A" Superheater Units Showing Various Shapes; Locomotive Superheater Company.

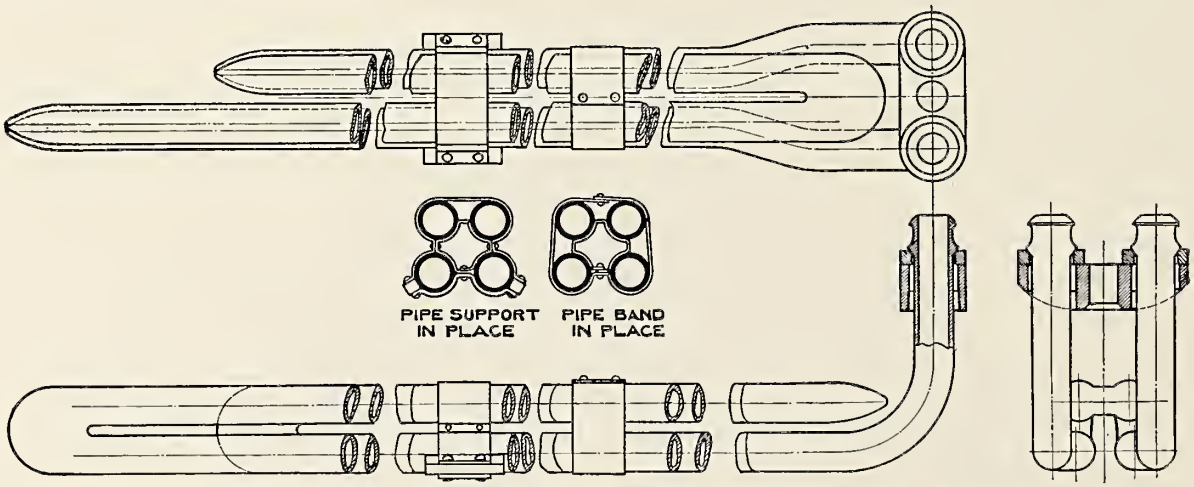

Fig. 426—Type "A" Superheater Unit with Welded or Torpedo Return Bends, Showing Pipe Support and Pipe Band in Place; Locomotive Superheater Company.

Names of Superheater Parts, Fig. 423.

1 *Header*
2 *Unit Shape No.* 1
3 *Unit Shape No.* 2
4 *Unit Shape No.* 3
5 *Unit Shape No.* 4
*6 *Return Bend, Style N*
*7 *Return Bend, Style P*
*8 *Return Bend, Style Q*
9 *Unit Pipe No.* 1
10 *Unit Pipe No.* 2
11 *Unit Pipe No.* 3
12 *Unit Pipe No.* 4
13 *Pipe Support*
14 *Pipe Band*
15 *Unit Clamp*
16 *Unit Bolt for Through Bolt Header*
16-A *Unit Bolt for Tee Bolt Header*
17 *Unit Pipe End Washer*
18 *Unit Clamp Bolt Washer*
19 *Unit Bolt Nuts (Hexagon Faced)*
20 *Damper Cylinder Complete*
21 *Damper Shaft Bearing, Outside*
22 *Damper Shaft Bearing, Inside*
23 *Damper Cylinder Body*
24 *Damper Cylinder Piston*
25 *Damper Cylinder Arm, Inside*
26 *Damper Cylinder Arm, Outside*
27 *Damper Link*
28 *Damper Shaft*
29 *Damper Shaft Arm*
30 *Damper Counterweight*
31 *Damper Pipe Union (2 per set)*
32 *Superheater Flues*
33 *Deflecting Plate*
34 *Damper*

* Numbers 6, 7 and 8 apply to old style units with cast steel return bends. In this illustration they refer only to the points at which these bends were located.

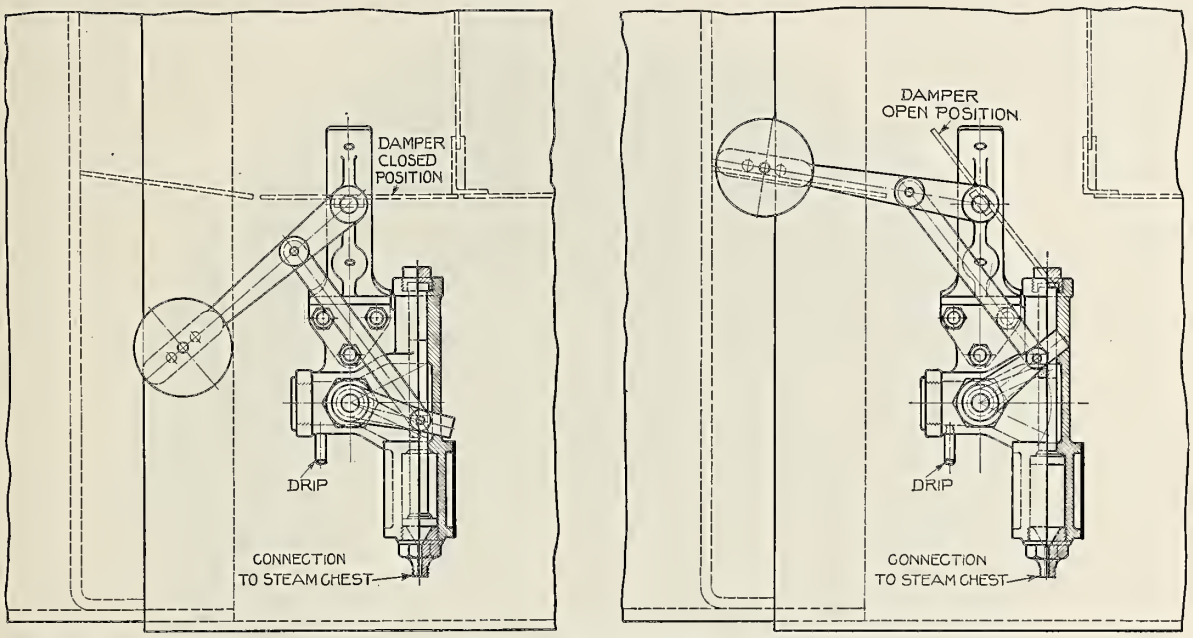

Fig. 427—Superheater Damper and Damper Cylinder, Showing Open and Closed Positions; Locomotive Superheater Company.

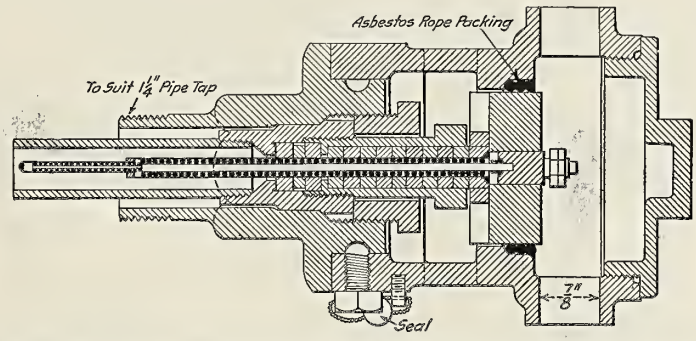

Fig. 428—Section Through Saturated Steam Fixture of Pyrometer; Locomotive Superheater Company.

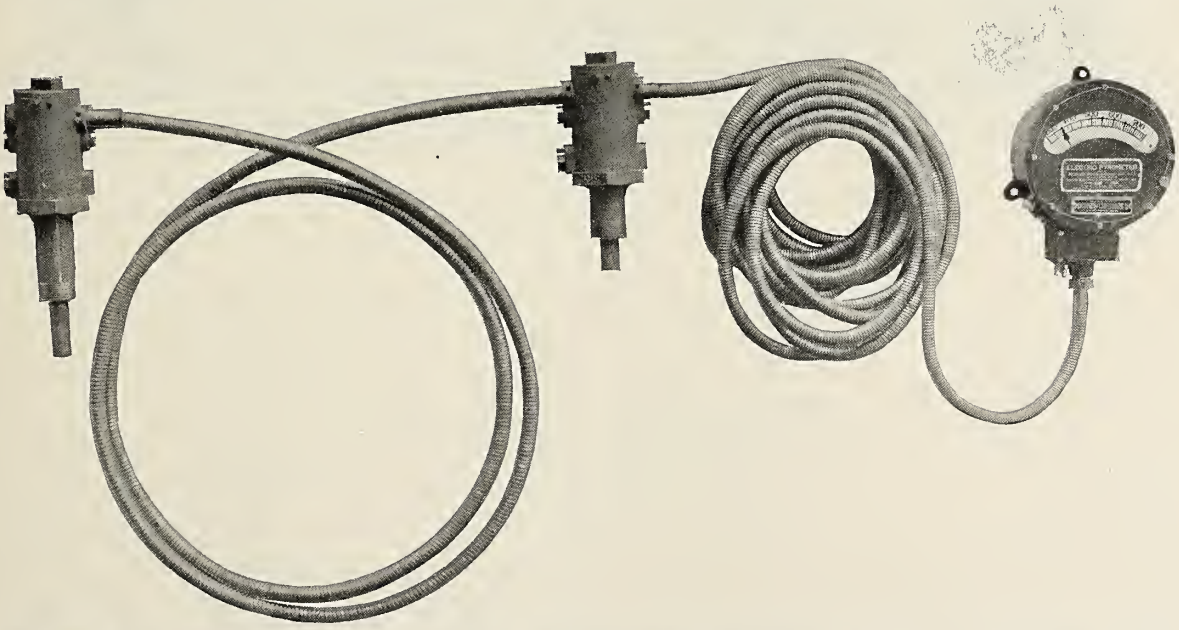

Fig. 429—Pyrometer Equipment for Indicating Temperatures of Superheated Steam; Locomotive Superheater Company.

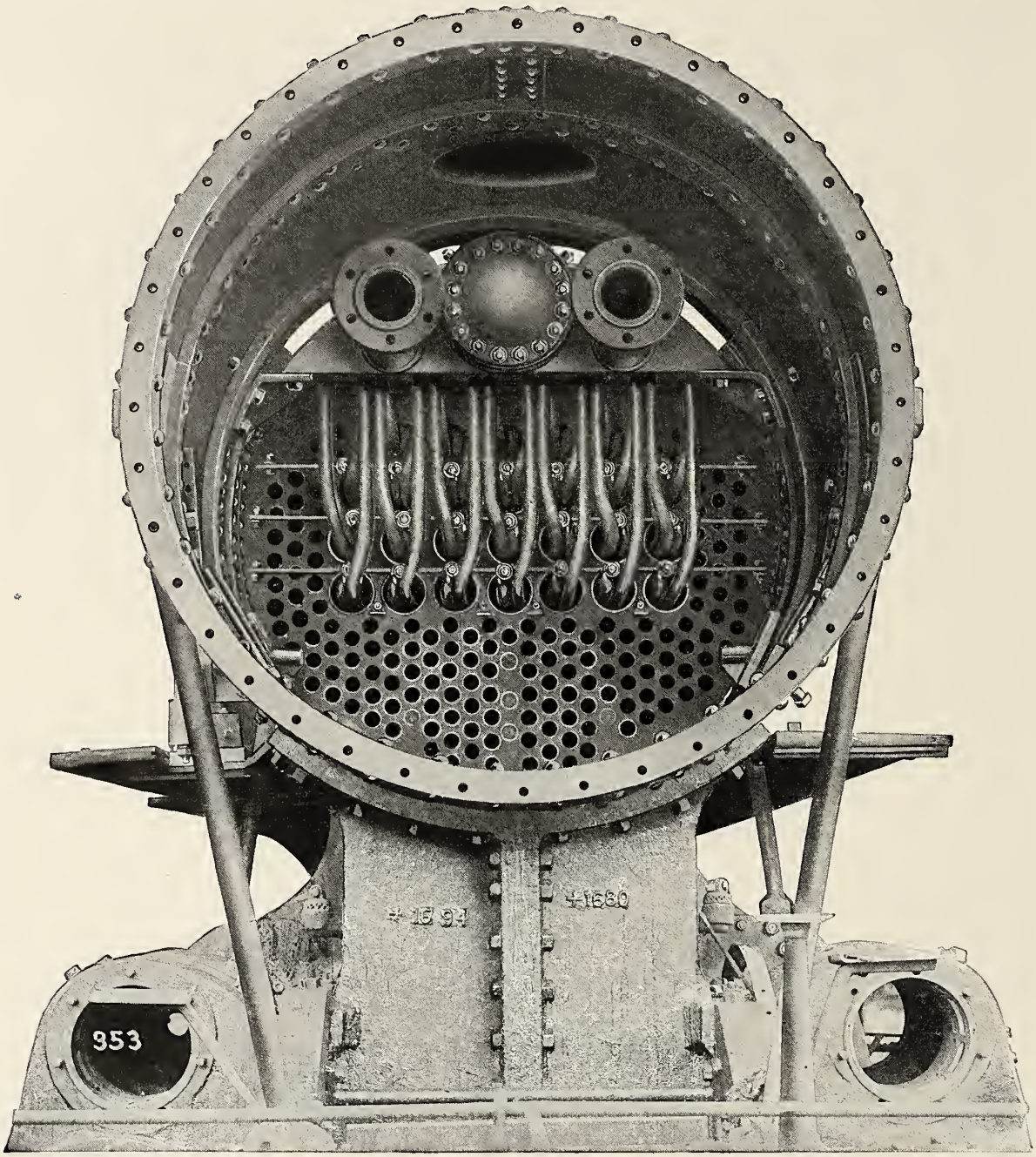

Fig. 430—Foster Type "C" 26-Unit Fire Tube Superheater Applied to a Mastodon (4-10-0) Locomotive; Power Specialty Company.

Names of Superheater Parts, Figs. 431-433.

1 *Damper*
2 *Damper Cylinder*
3 *Damper Shaft*
4 *Damper Shaft Arm*
5 *Damper Shaft Bearing (Inside)*
6 *Damper Shaft Bearing (Outside)*
7 *Damper Shaft Counterweight*
8 *Division Plug*
9 *Division Plug Gasket*
10 *Division Plug Plate*
11 *Dry Pipe Clamping Ring*
12 *Superheater Header*
13 *Superheater Header End Plate*
14 *Superheater Header Studs*
15 *Superheater Header Support*
16 *Superheater Tube Supports and Spacers*
17 *Superheater Units*
18 *Superheater Unit Anchorage Bar*
19 *Superheater Unit Anchorage Clip*
20 *Superheater Unit Anchorage Bolt*
21 *Superheater Unit Anchorage Support*

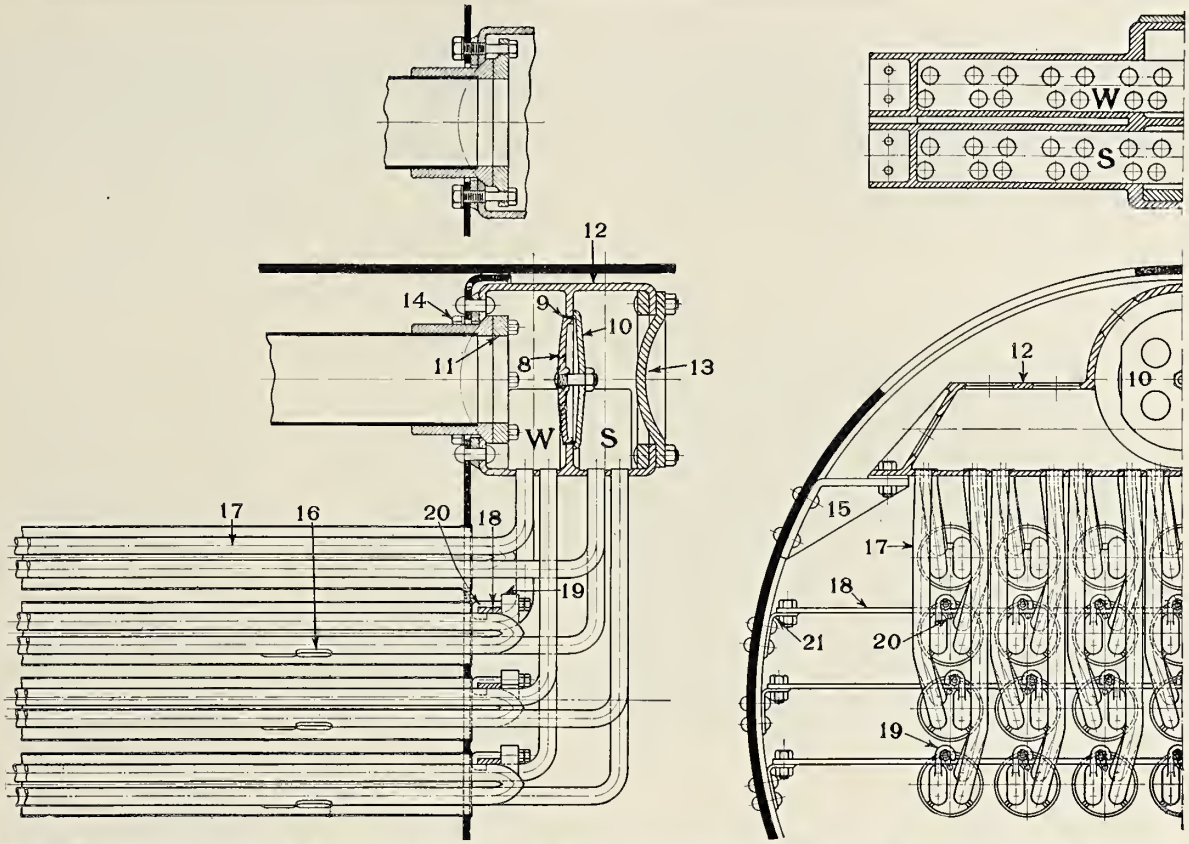

Fig. 431—Arrangement of Units and Header of Foster Superheater Showing Expanded Unit Joint at Header, Welded Return Bends and Unit Anchorage; Power Specialty Company.

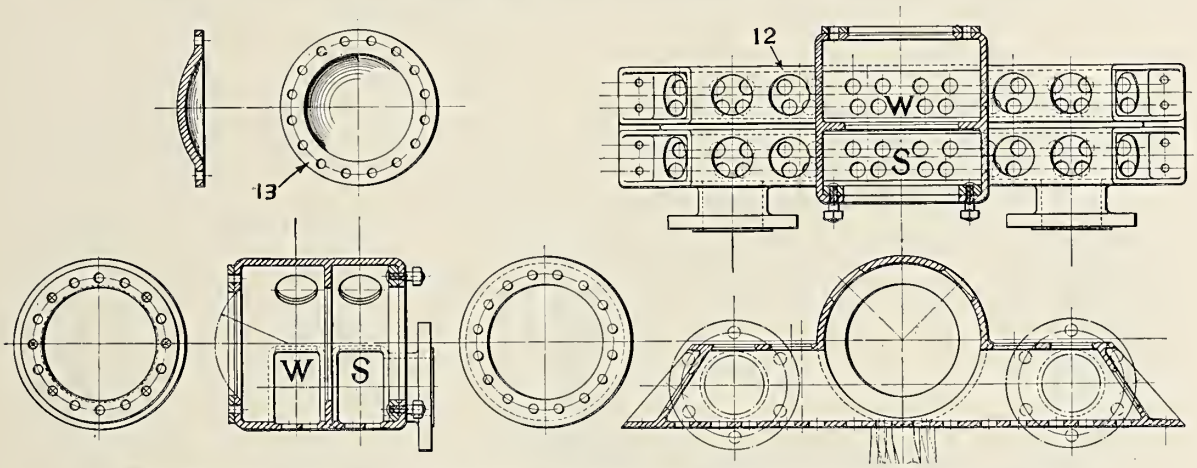

Fig. 432—Foster Type "C" All-Wrought Steel Header; Power Specialty Company.

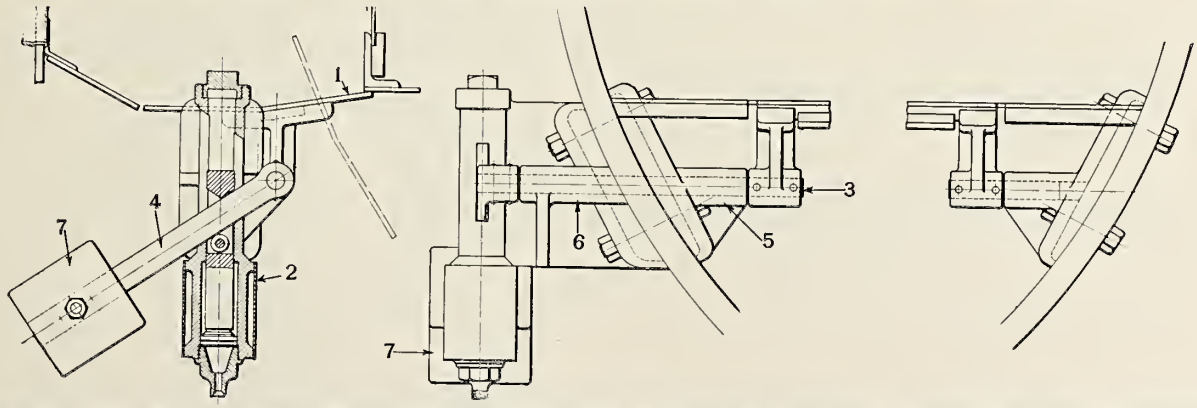

Fig. 433—Foster Superheater Damper Control Cylinder and Damper Supports; Power Specialty Company. Numbers Refer to Names of Parts on Page 318.

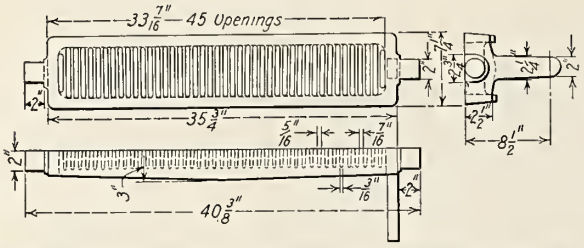

Fig. 434—Grate Bar; Baldwin Locomotive Works.

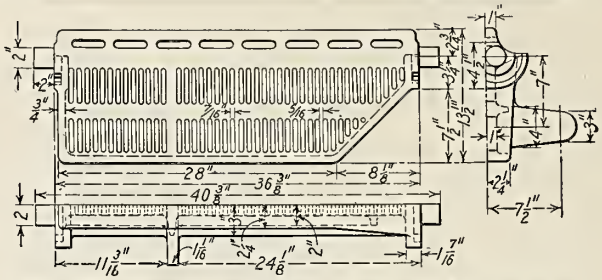

Fig. 435—Drop Grate Bar; Baldwin Locomotive Works.

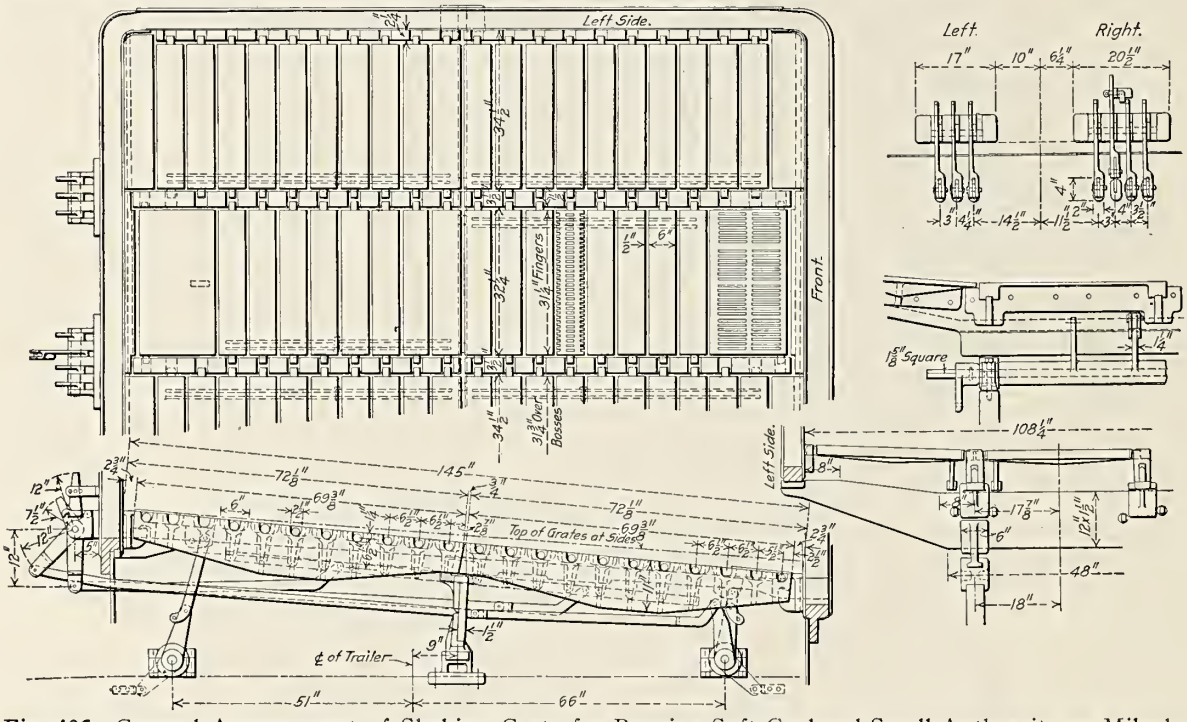

Fig. 436—General Arrangement of Shaking Grate for Burning Soft Coal and Small Anthracite on Mikado (2-8-2) Locomotive. Built for the Philadelphia & Reading by the Baldwin Locomotive Works.

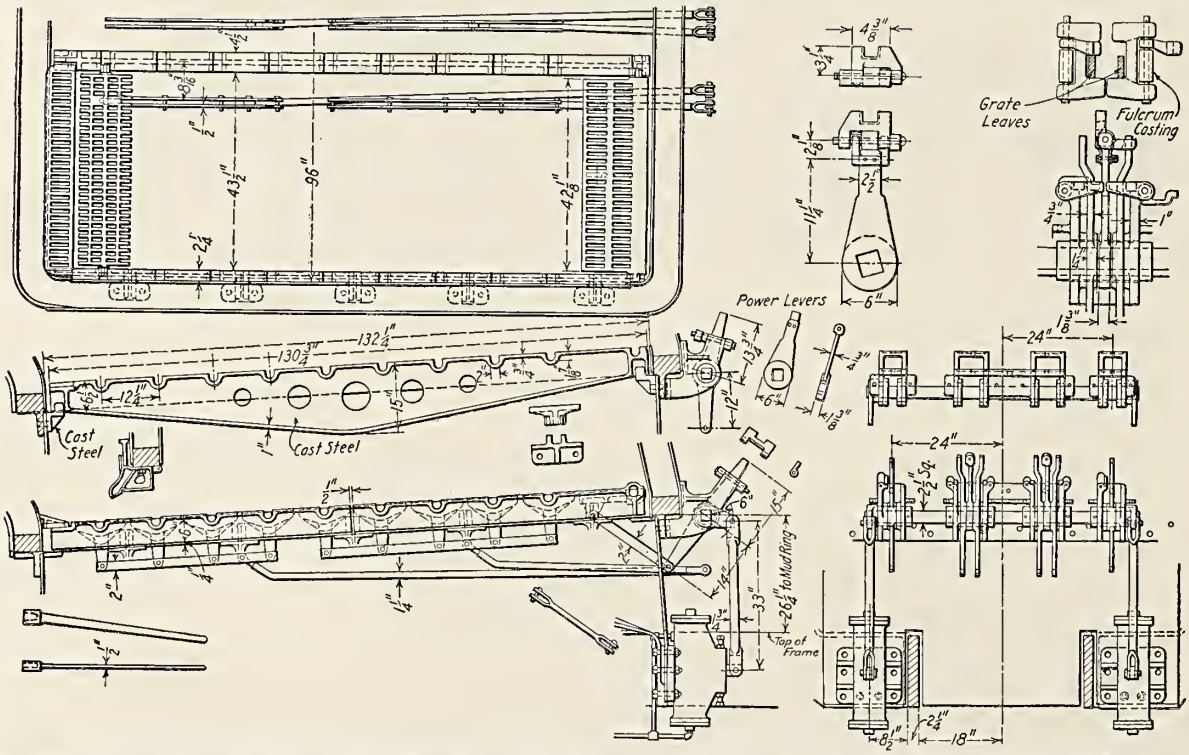

Fig. 437—General arrangement of Shaking Grate for Burning Soft Coal on Santa Fe Type (2-10-2) Locomotive. Built for the Erie by the Baldwin Locomotive Works.

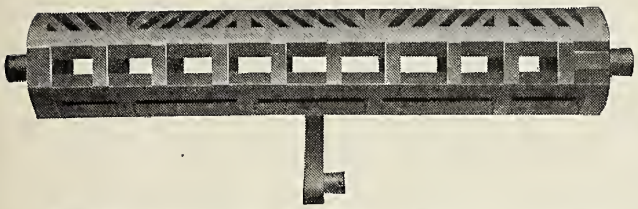

Fig. 438—Grate Bar; Thomas Grate Bar Company.

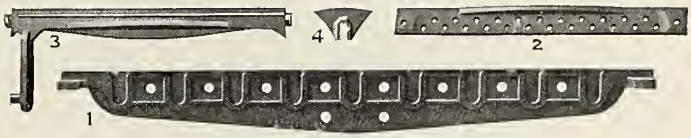

Fig. 439—Parts of Grate; The Hulson Grate Company.

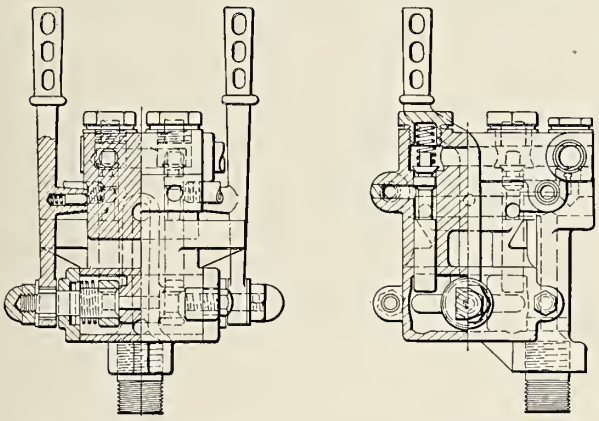

Fig. 440—Operating Valve of Franklin Steam-Operated Grate Shaker; Franklin Railway Supply Company.

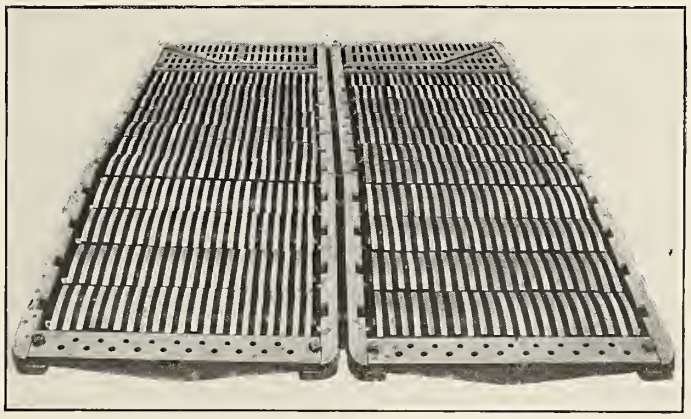

Fig. 441—Grate for 108 in. by 66 in. Firebox; The Hulson Grate Company.

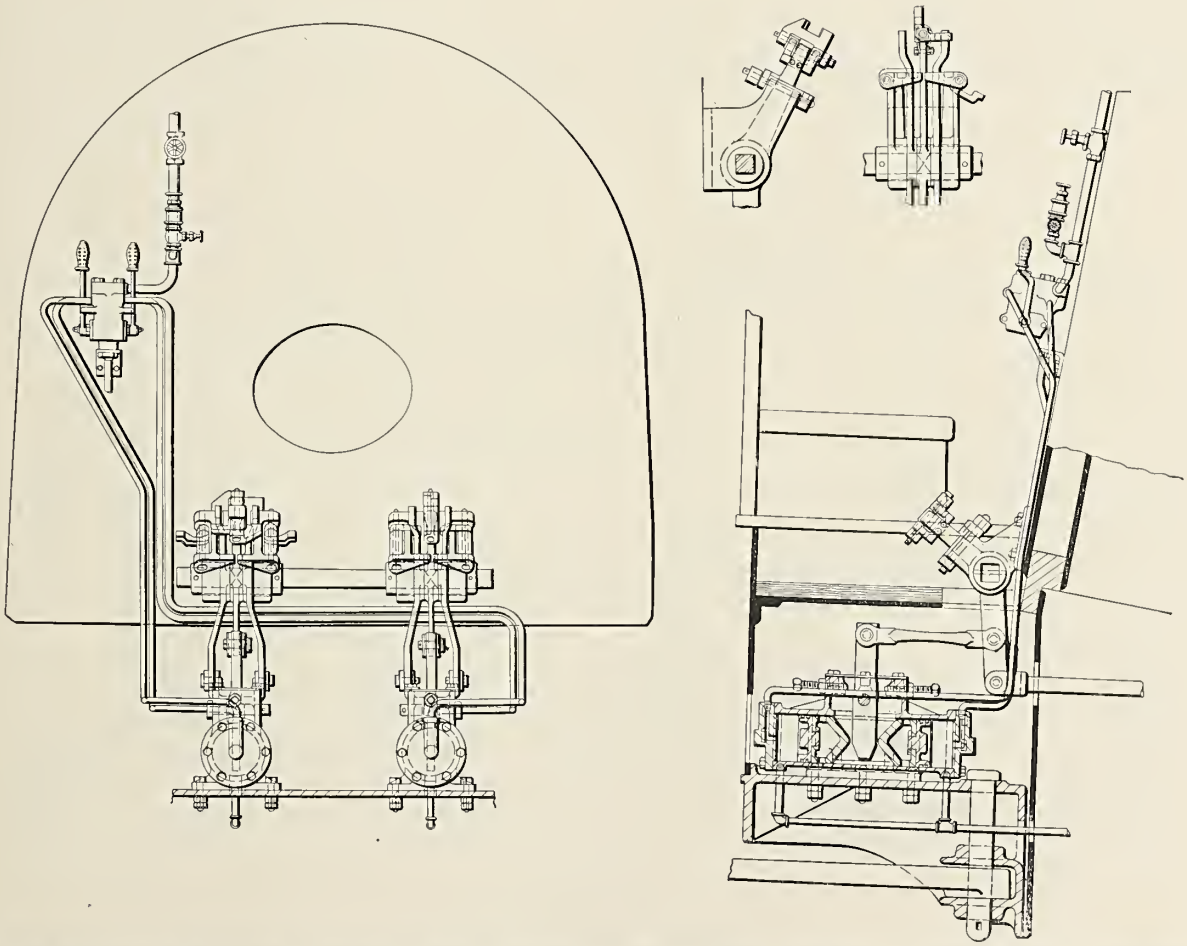

Fig. 442—Arrangement of Franklin Steam Operated Grate Shaker; Franklin Railway Supply Company.

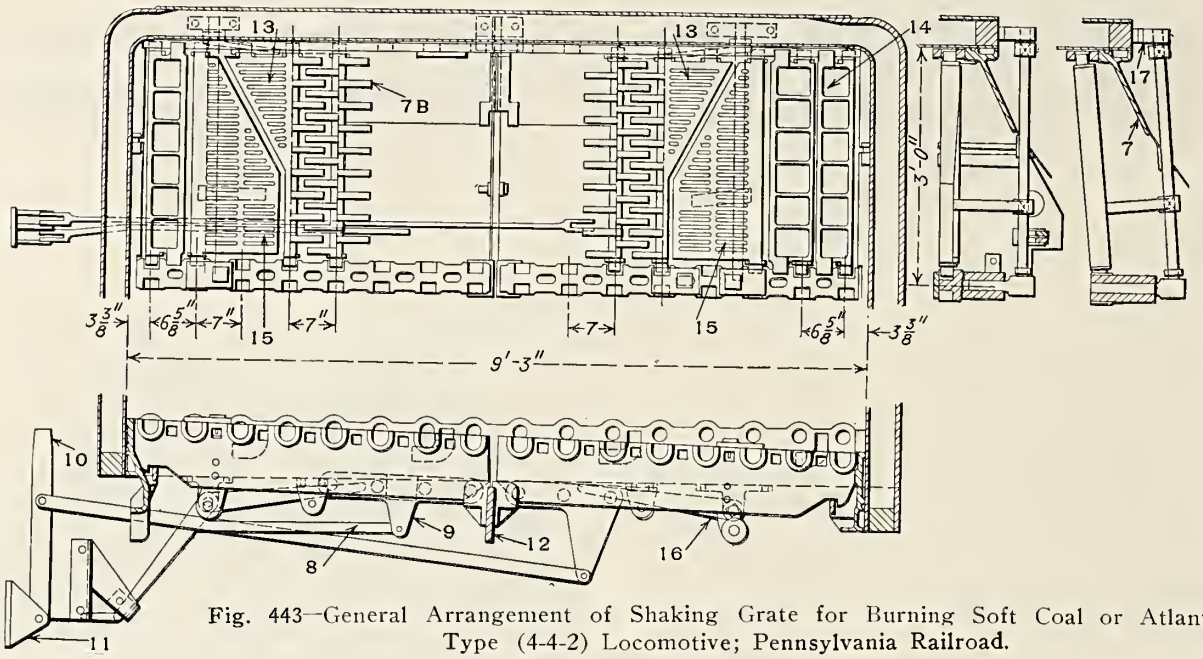

Fig. 443—General Arrangement of Shaking Grate for Burning Soft Coal or Atlantic Type (4-4-2) Locomotive; Pennsylvania Railroad.

(*See pages 323 and 324 for details.*)

Names of Parts of Grates and Ashpans, Figs. 443-465.

1 *Ashpan*
2 *Damper*
4 *Ashpan Hopper Slide or Door*
4b *Ashpan Hopper Slide Rod*
4c *Ashpan Hopper Slide Guide*
7 *Side Grate and Ashpan Support*
7b *Shaking Grate*
8 *Shaking Grate Rod*
9 *Shaking Grate Connection Bar*
10 *Shaking Grate Lever*
11 *Shaking Grate Lever Fulcrum*
12 *Foundation or Mud Ring Cross Brace*
13 *Corner Grate*
14 *Dead Plate*
15 *Drop Grate*
16 *Drop Grate Operating Arm*
17 *Drop Grate Shaft Bearing*
19 *Back Ashpan Sheet*
19a *Side Ashpan Sheet*
20 *Ashpan Hopper*
29 *Ashpan Hopper Slide Operating Cylinder*
30 *Ashpan Hopper Slide Operating Cylinder Piston Rod*
37 *Thimble*

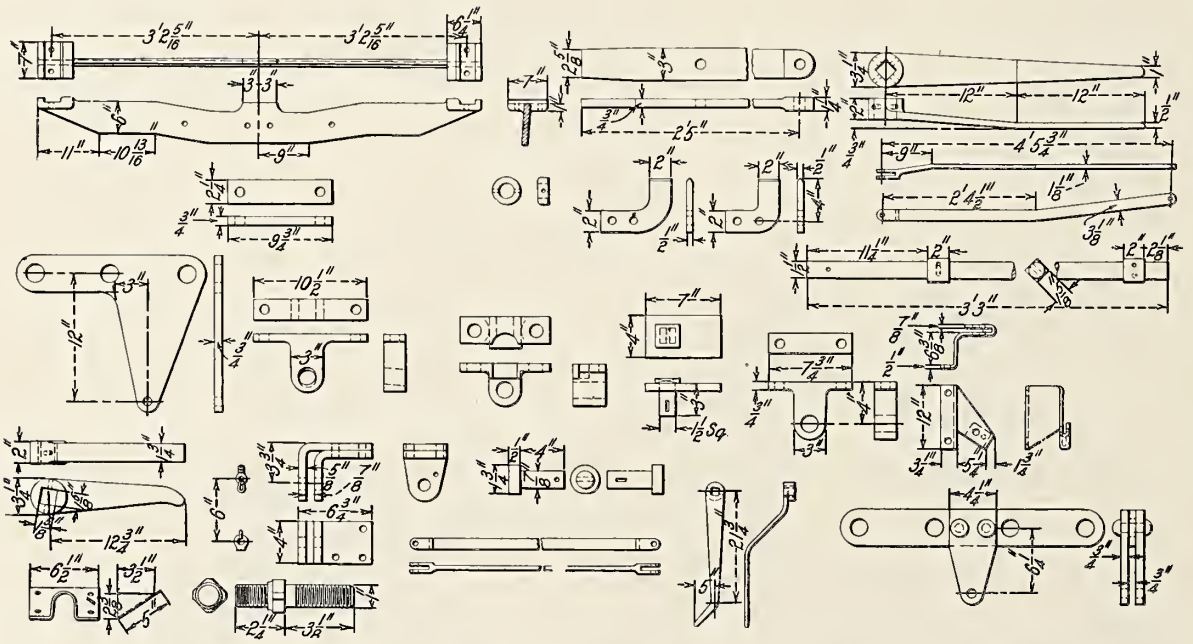

Fig. 444—Forged Details of Shaking Grate for Burning Soft Coal on Atlantic Type (4-4-2) Locomotive; Pennsylvania Railroad.

(*See Fig. 443 for General Arrangement.*)

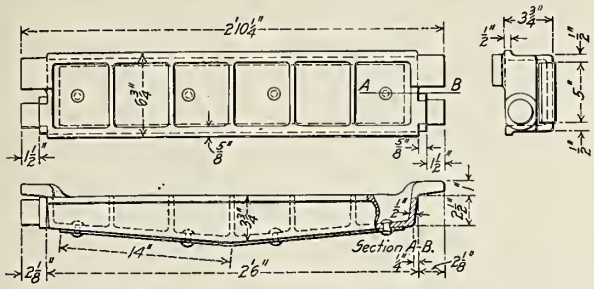

Fig. 445—Intermediate Dead Plate.

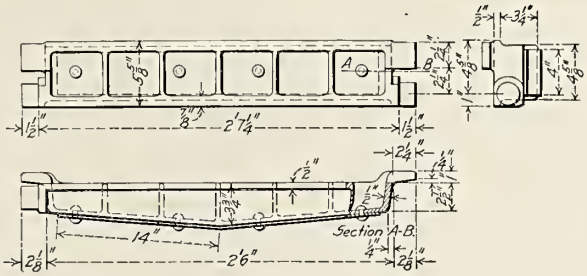

Fig. 446—End Dead Plate.

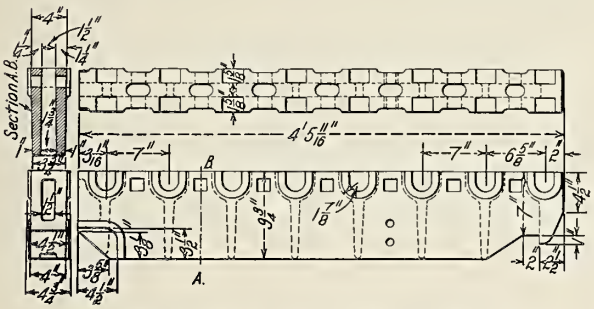

Fig. 447—Front Grate Center Support.

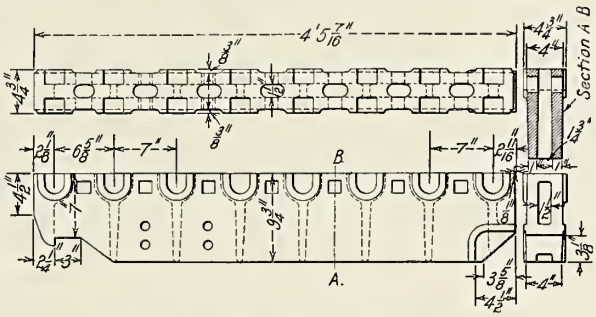

Fig. 448—Rear Grate Center Support.

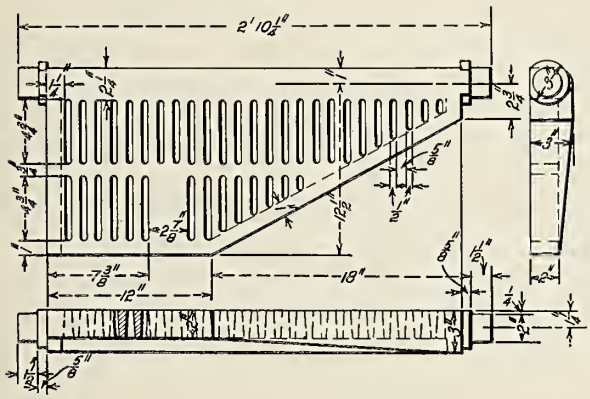

Fig. 449—Drop Grate Bar.

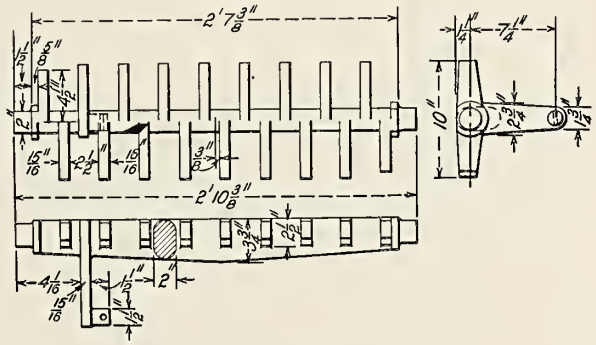

Fig. 450—Finger Grate Bar.

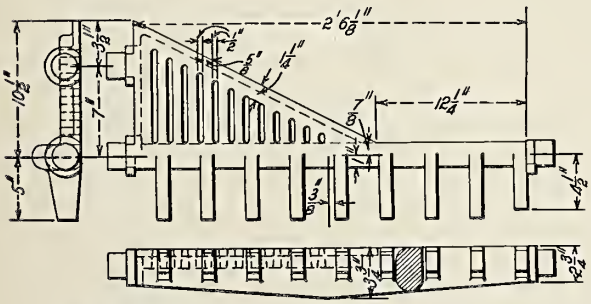

Fig. 451—Right Hand Corner Grate Bar.

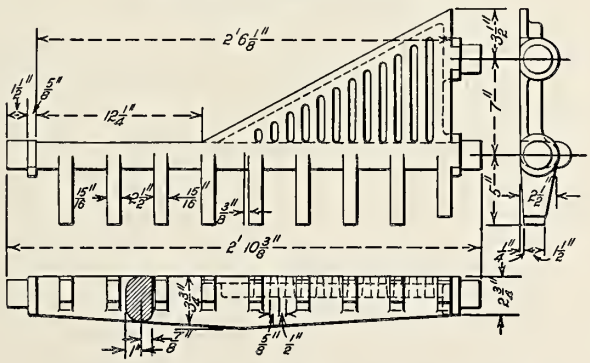

Fig. 452—Left Hand Corner Grate Bar.

Details of Shaking Grate for Burning Soft Coal on Atlantic Type (4-4-2) Locomotive; Pennsylvania Railroad.

(*See Fig.* 443 *for General Arrangement.*)

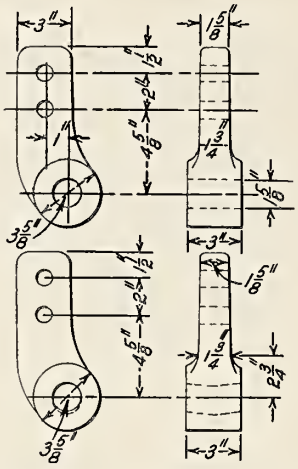

Fig. 453—Drop Grate Shaft Center Support.

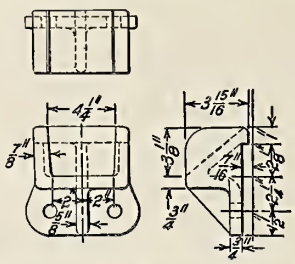

Fig. 454—Support for Grate Center Bearing.

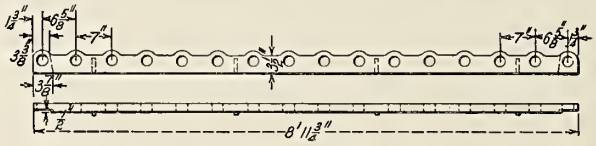

Fig. 455—Grate Side Support.

Details of Shaking Grate for Burning Soft Coal on Atlantic Type (4-4-2) Locomotive; Pennsylvania Railroad.

(*See Fig. 443 for General Arrangement.*)

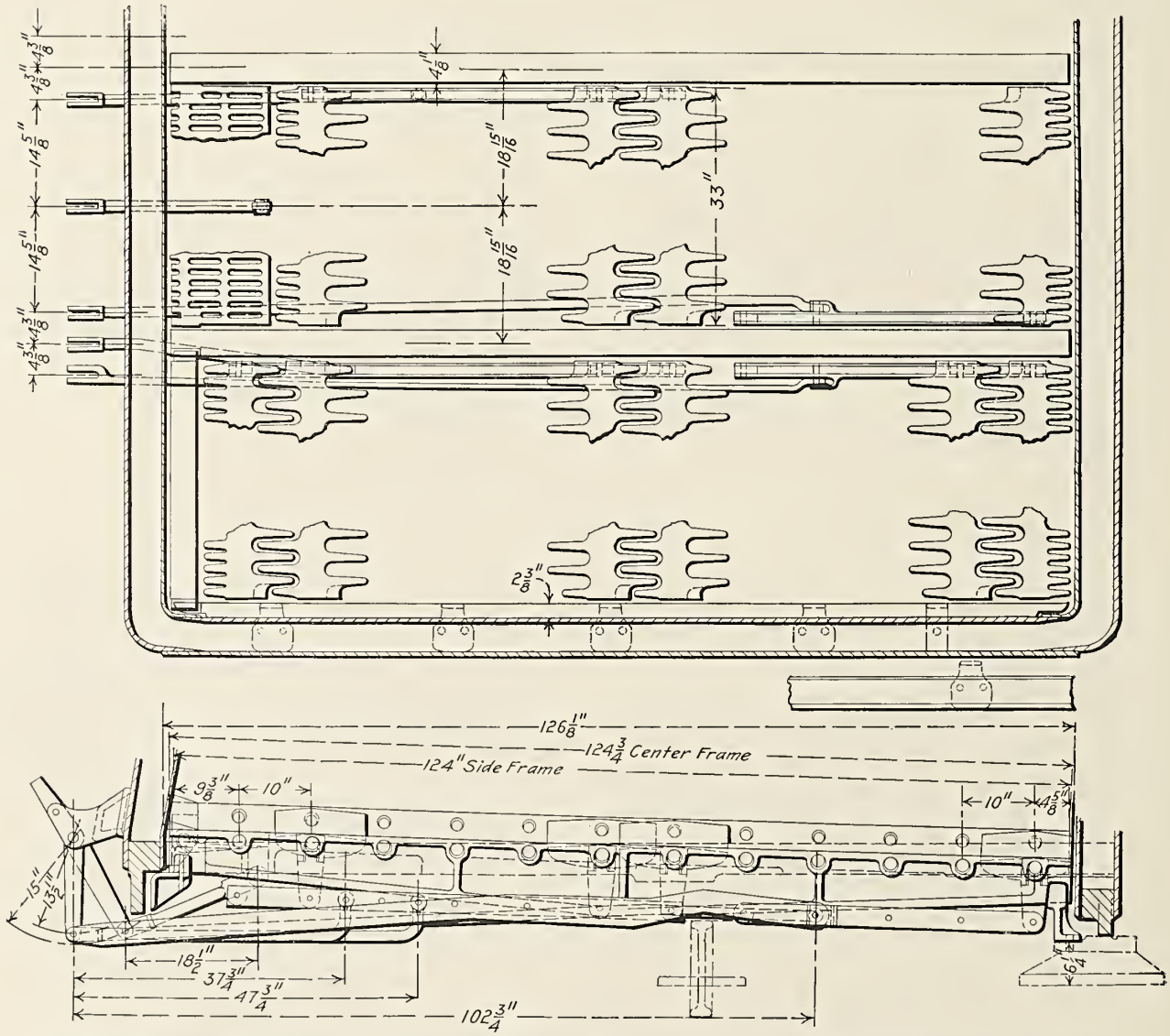

Fig. 456—General Arrangement of Shaking Grate for Burning Soft Coal on Mallet Articulated (0-8-8-0) Compound Locomotive. Built for the Bingham & Garfield by the American Locomotive Company.

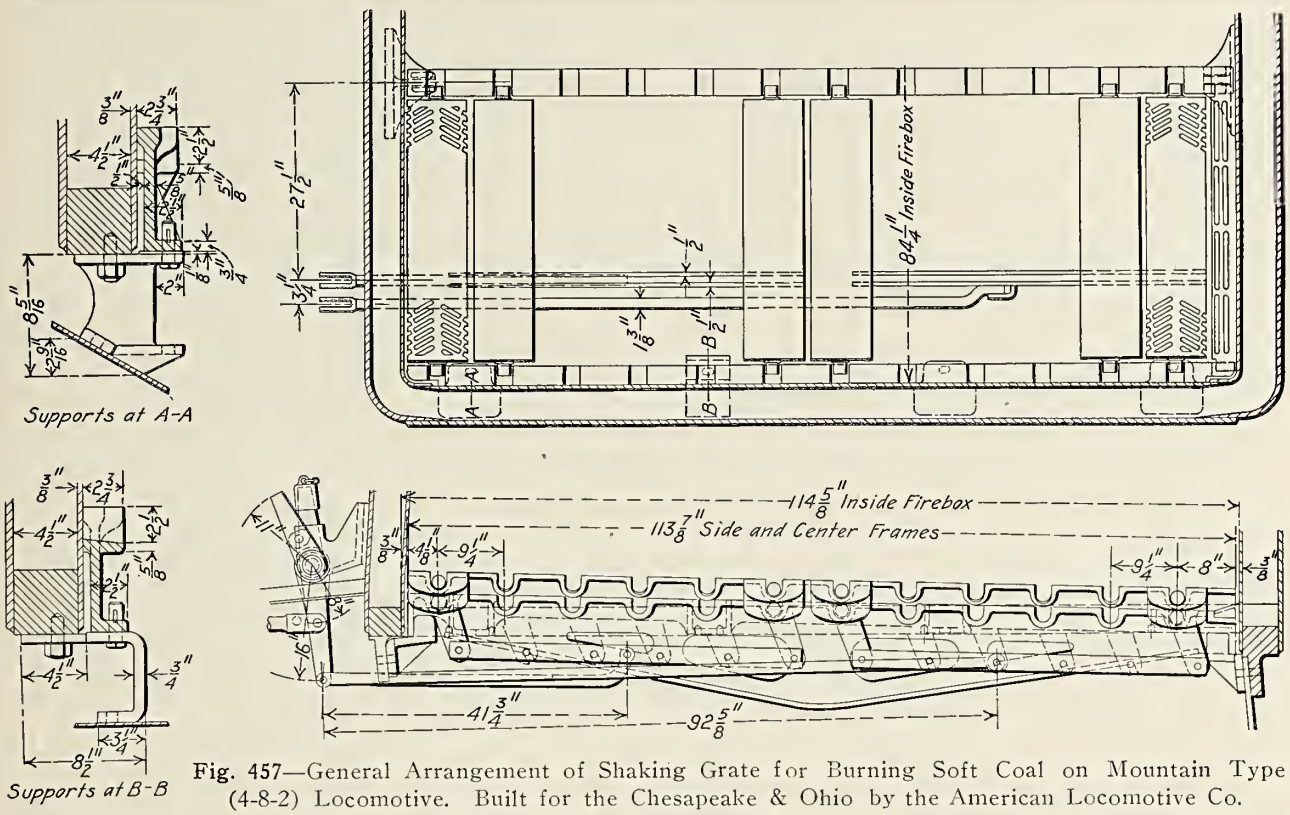

Fig. 457—General Arrangement of Shaking Grate for Burning Soft Coal on Mountain Type (4-8-2) Locomotive. Built for the Chesapeake & Ohio by the American Locomotive Co.

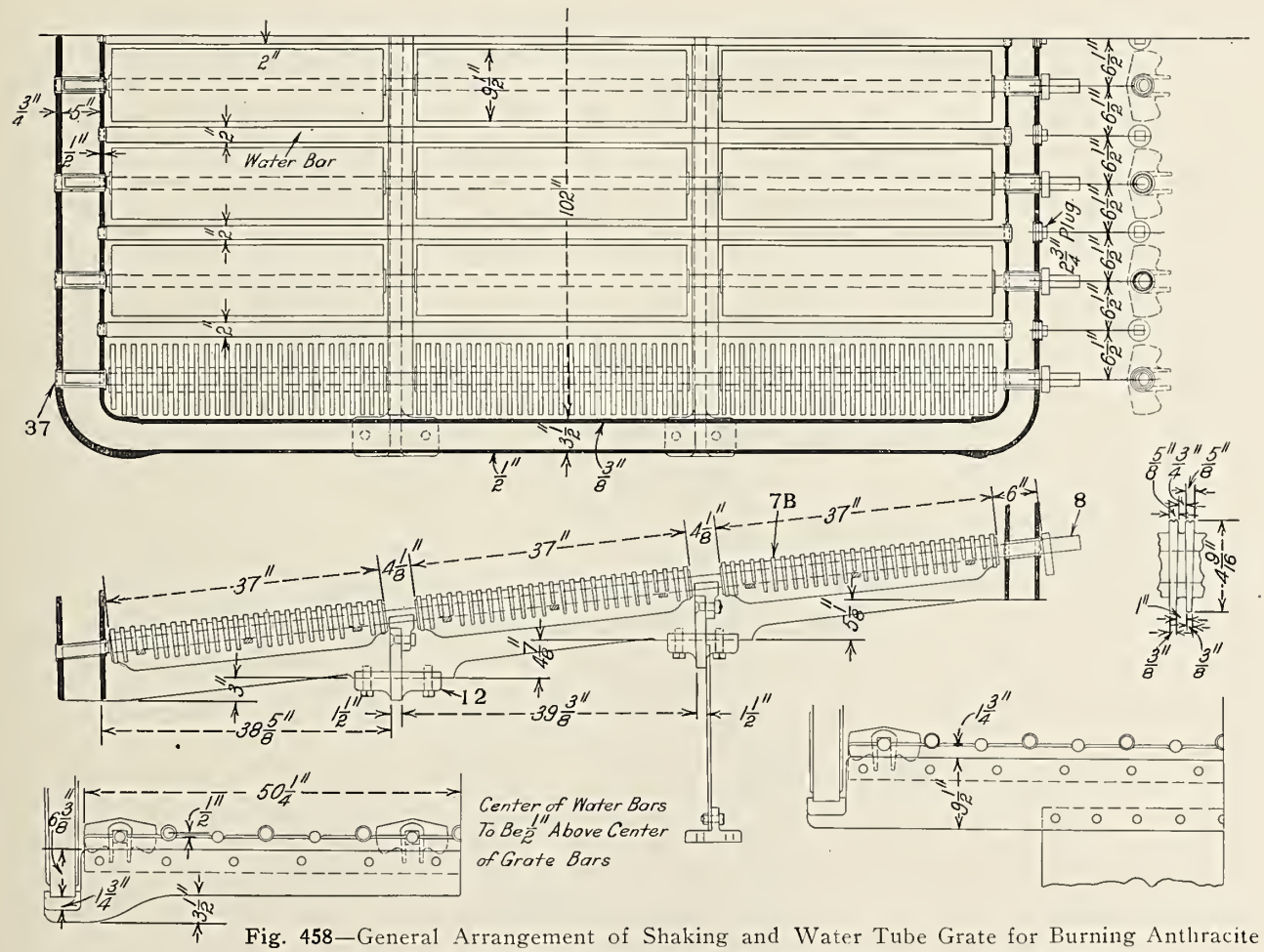

Fig. 458—General Arrangement of Shaking and Water Tube Grate for Burning Anthracite Coal. Built for the Lehigh Valley by the Baldwin Locomotive Works.

Numbers Refer to Names of Parts on Page 322.

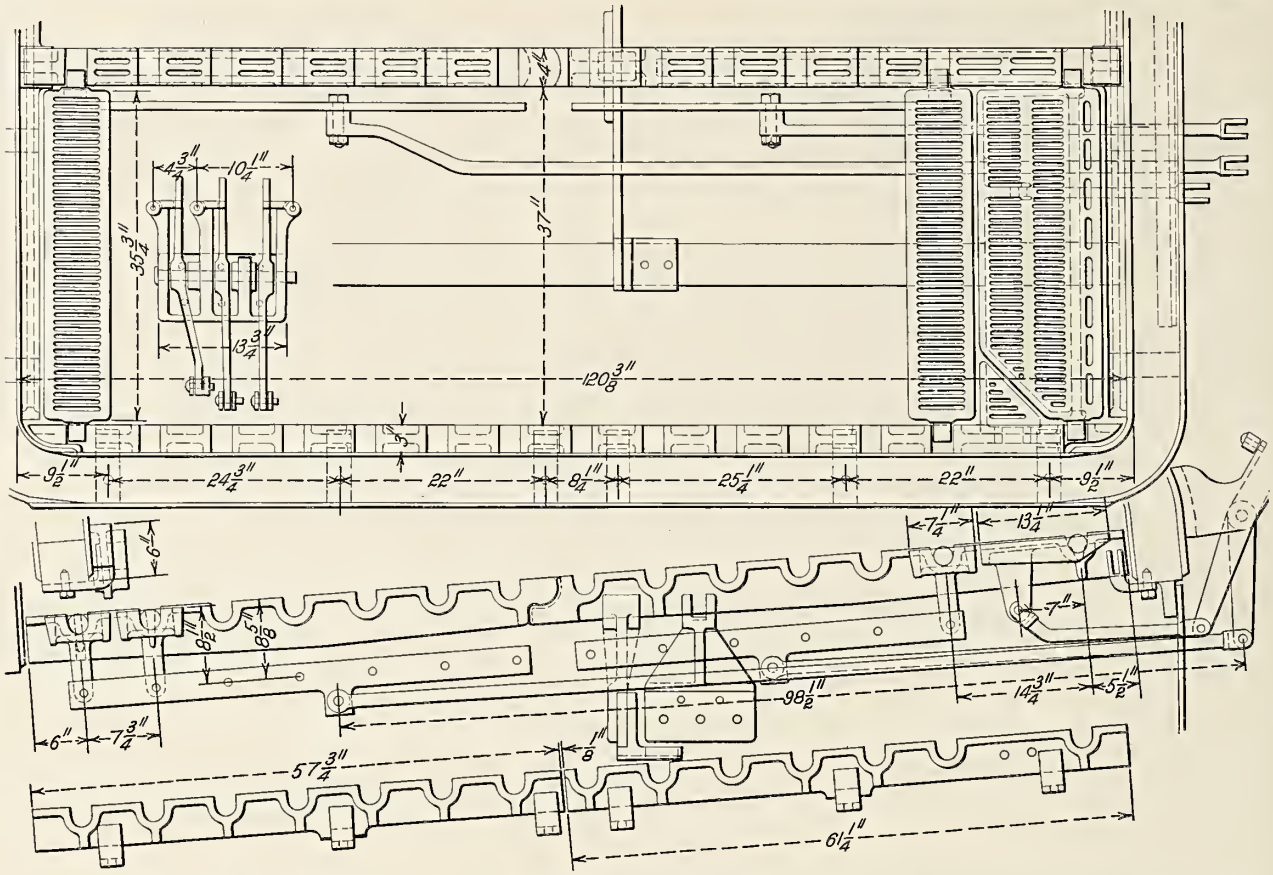

Fig. 459—General Arrangement of Shaking Grate for Burning Lignite on Mikado (2-8-2) Locomotive. Built for the Oregon Railroad & Navigation Co. by the Baldwin Locomotive Works.

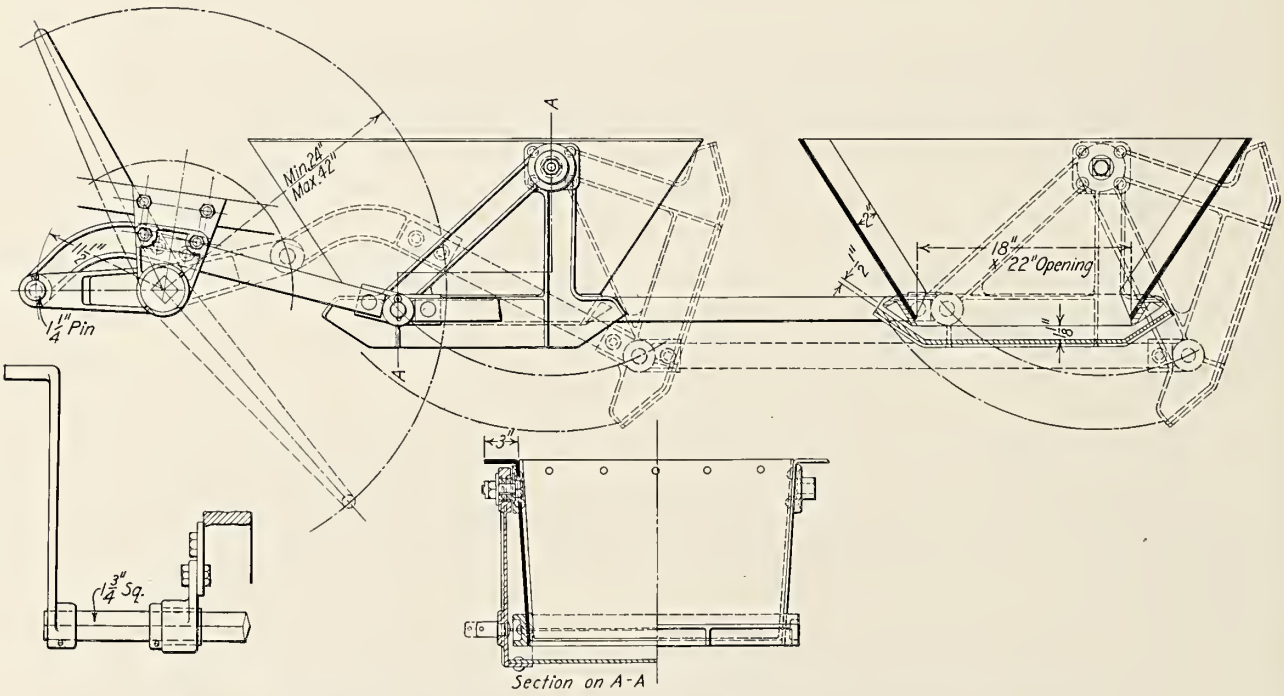

Fig. 460—Wine Gravity Dumping Ashpan; Wine Railway Appliance Company.

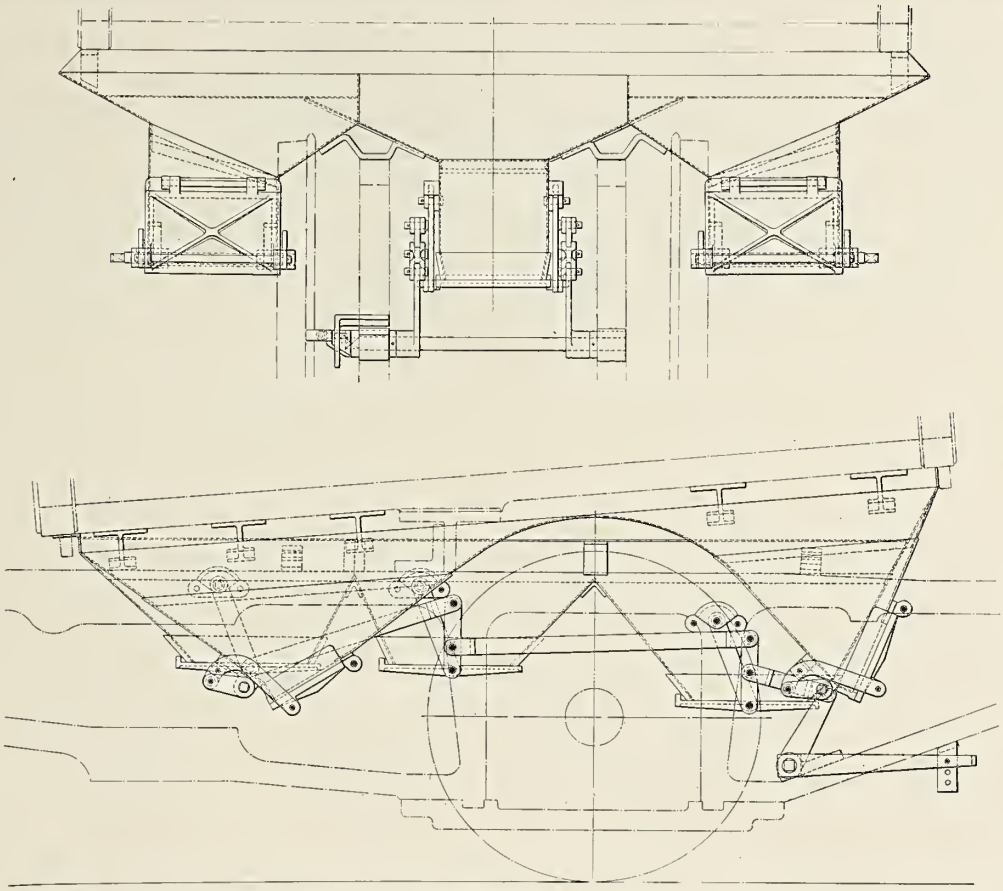

Fig. 461—Ashpan with Inside and Outside Hoppers Equipped to Operate Independently; Baldwin Locomotive Works.

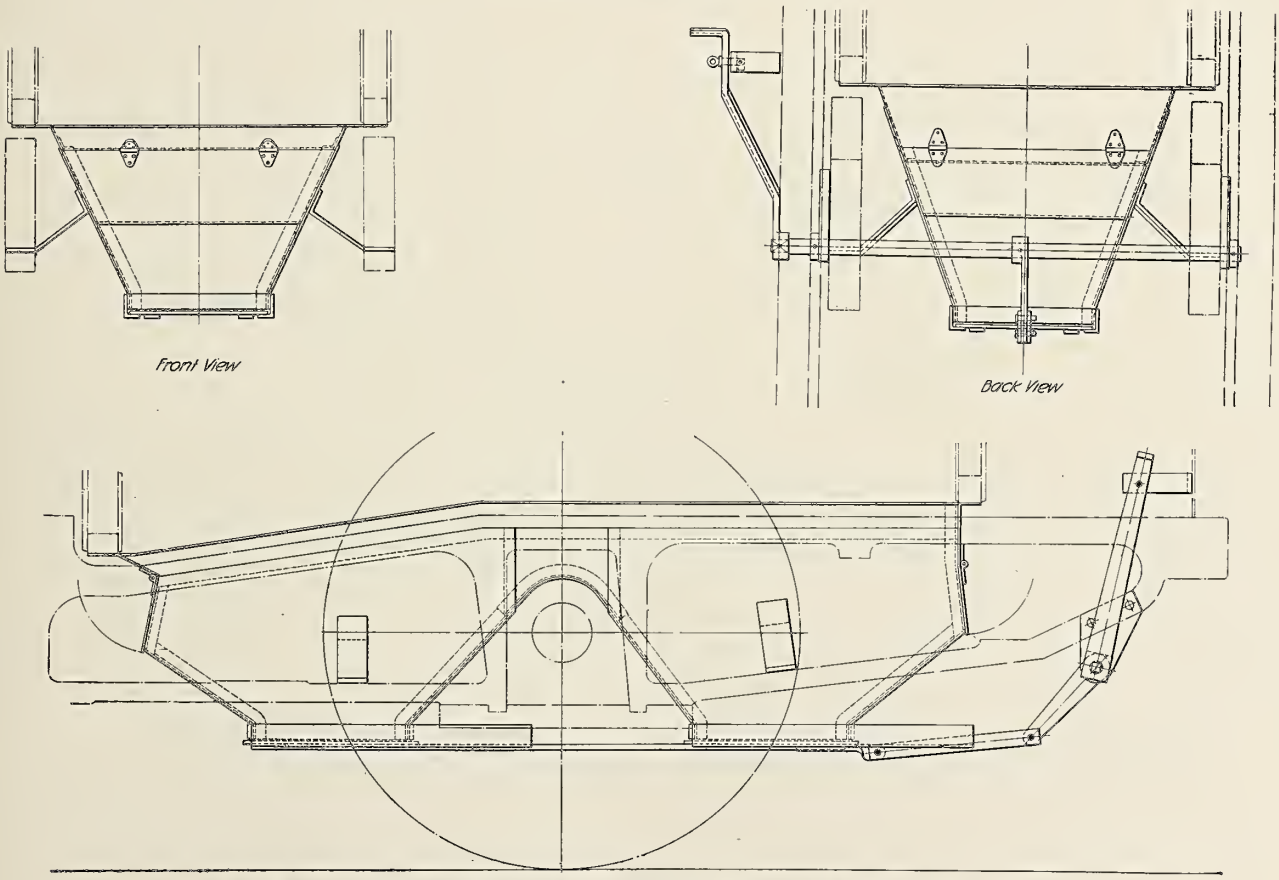

Fig. 462—Ashpan with Slide Type Hoppers; Baldwin Locomotive Works.

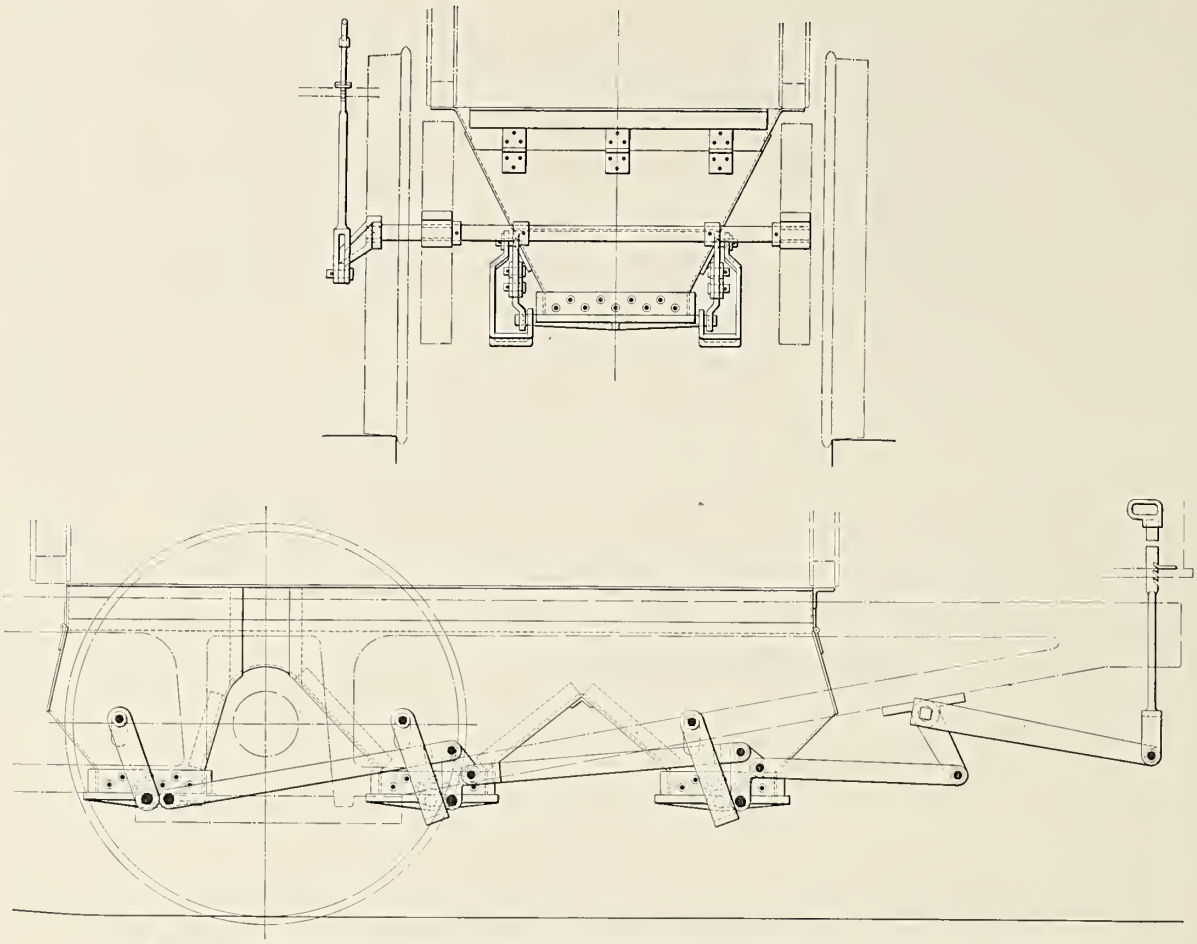

Fig. 463—Ashpan with Swing Doors on Hoppers; Baldwin Locomotive Works.

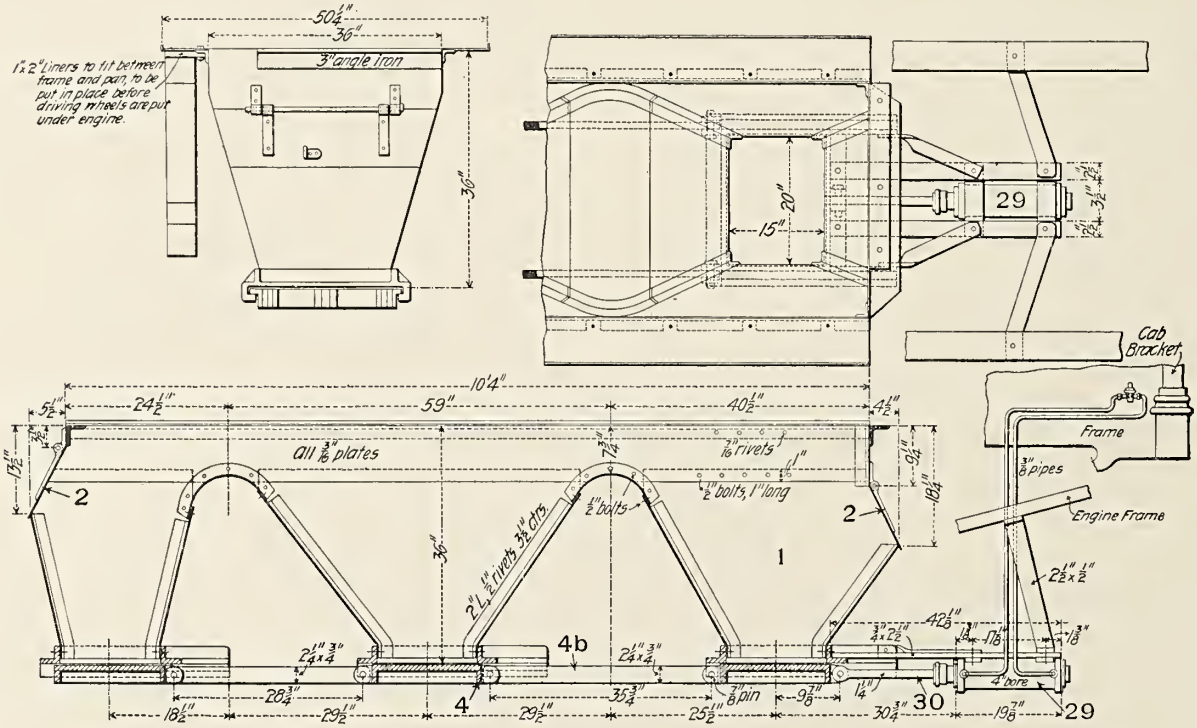

Fig. 464—Self-Clearing Deep Hopper Ashpan Operated by Compressed Air; Southern Pacific.

Numbers Refer to Names of Parts on Page 322.

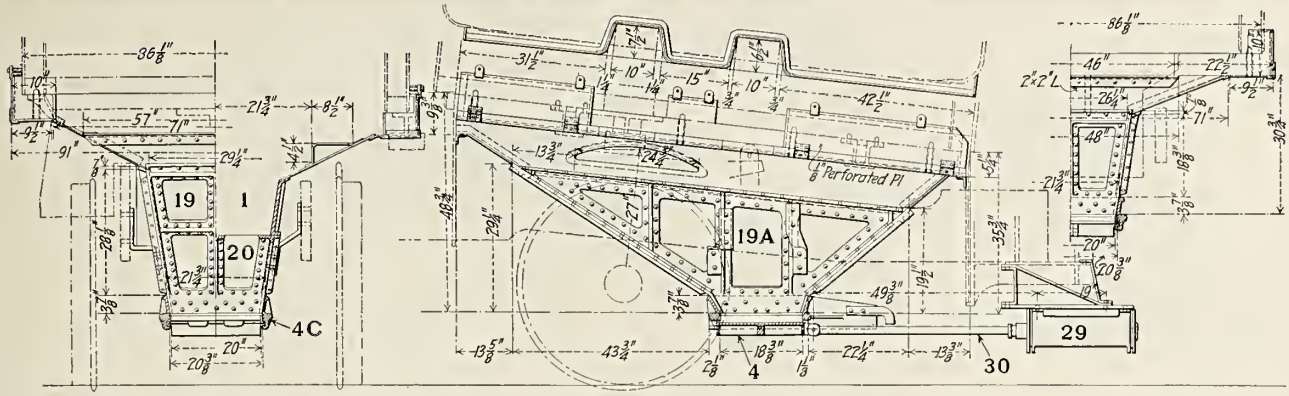

Fig. 465—Self-Clearing Ashpan for Pacific Type (4-6-2) Locomotive. Also Shows the Arrangement of the Compressed Air Dumping Apparatus. Built for the New York Central & Hudson River by the American Locomotive Company.

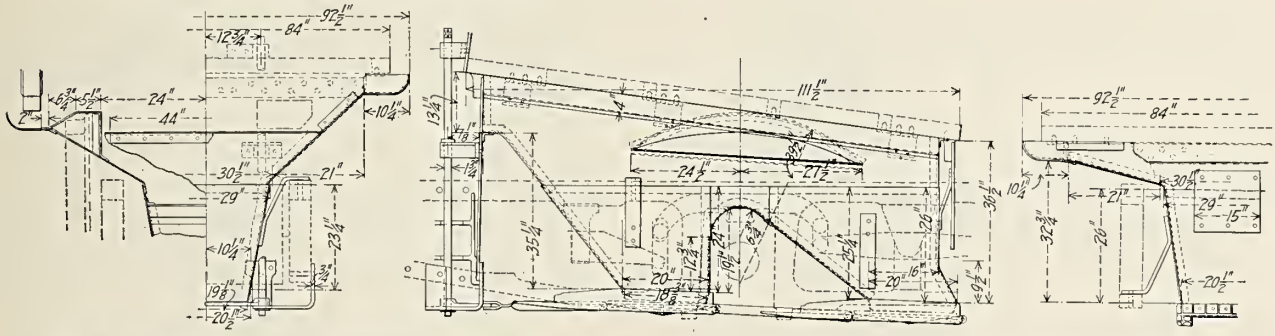

Fig. 466—Self-Clearing Ashpan for Consolidation (2-8-0) Locomotive. Built for the Delaware & Hudson by the American Locomotive Company.

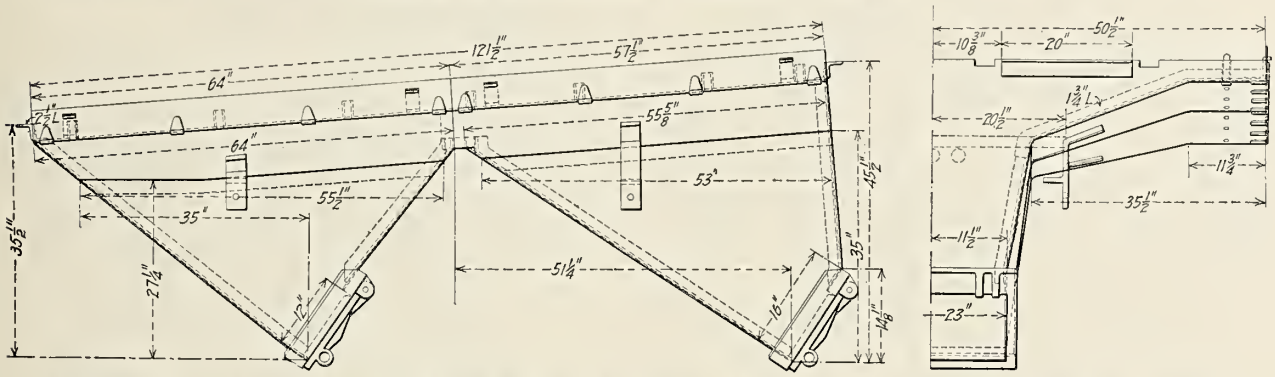

Fig. 467—Self-Clearing Ashpan. Built for the Associated Lines by the Baldwin Locomotive Works.

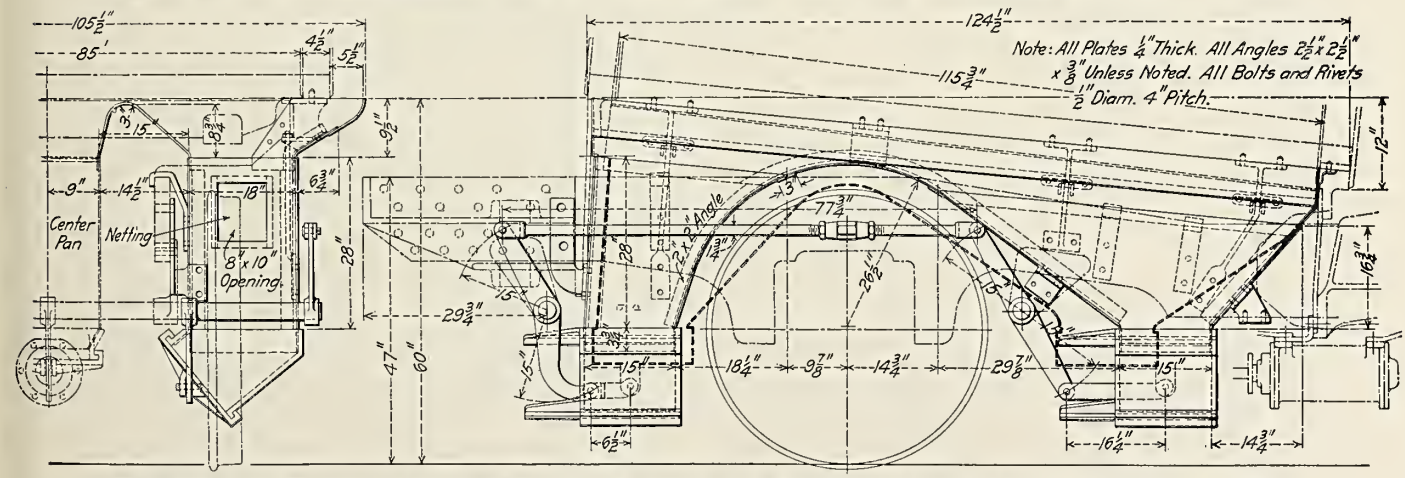

Fig. 468—Self-Clearing Ashpan with Six Hoppers for Mountain Type (4-8-2) Locomotive. Also Shows Arrangement of the Compressed Air Dumping Apparatus. Built for the Chesapeake & Ohio by the American Locomotive Company.

Numbers Refer to Names of Parts on Page 322.

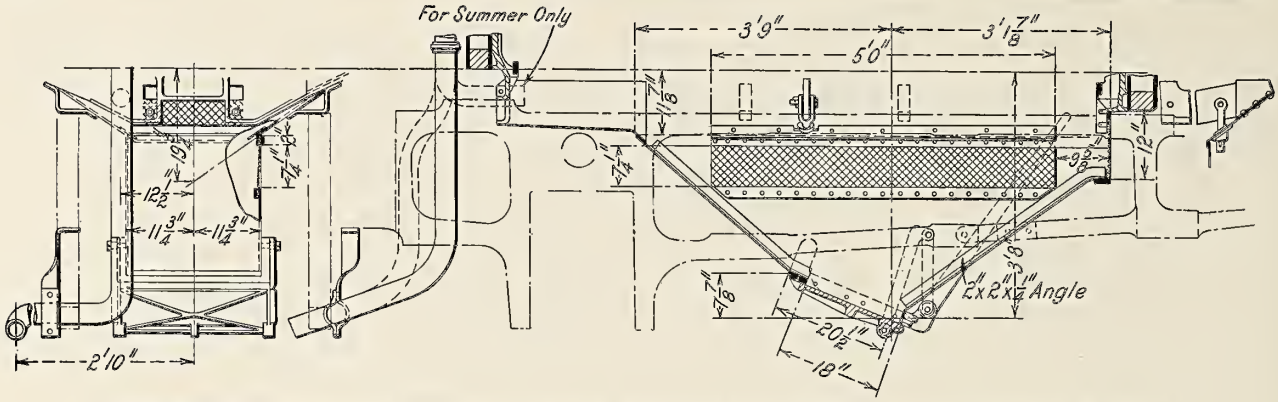

Fig. 469—Self-Clearing Ashpan for Atlantic Type (4-4-2) Locomotive; Pennsylvania Railroad.

(See Figs. 470-479 for Details of this Ashpan.)

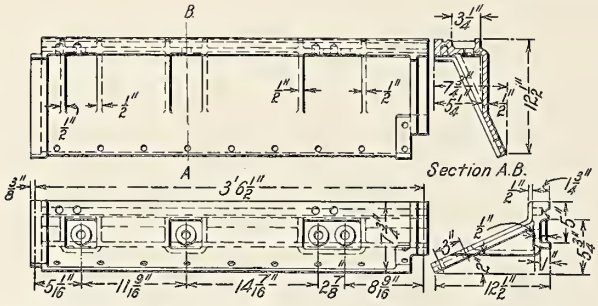

Fig. 470—Back Intermediate Side Ashpan Support.

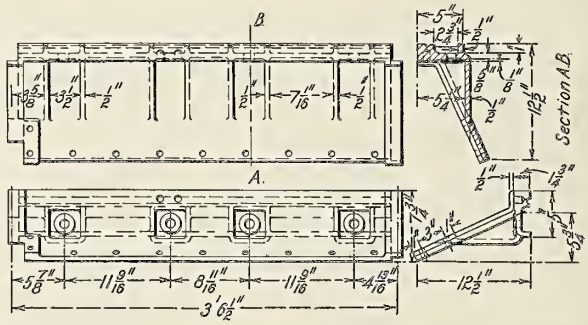

Fig. 471—Front Intermediate Side Ashpan Support.

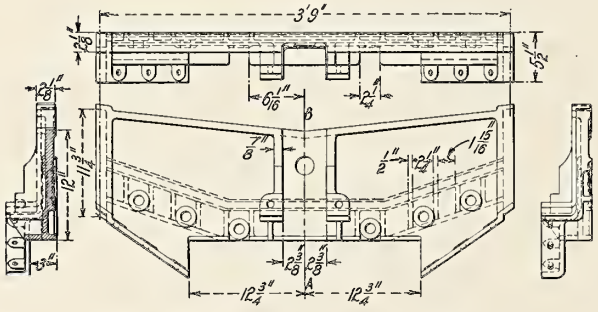

Fig. 472—Front Ashpan Support.

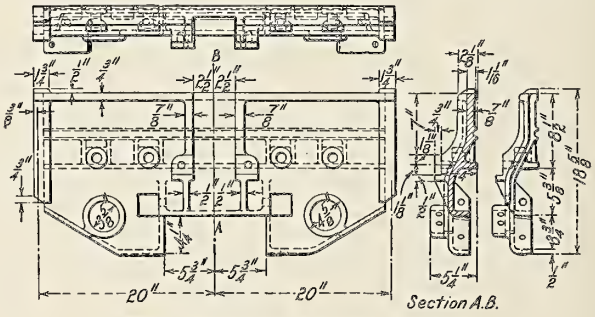

Fig. 473—Back Ashpan Support.

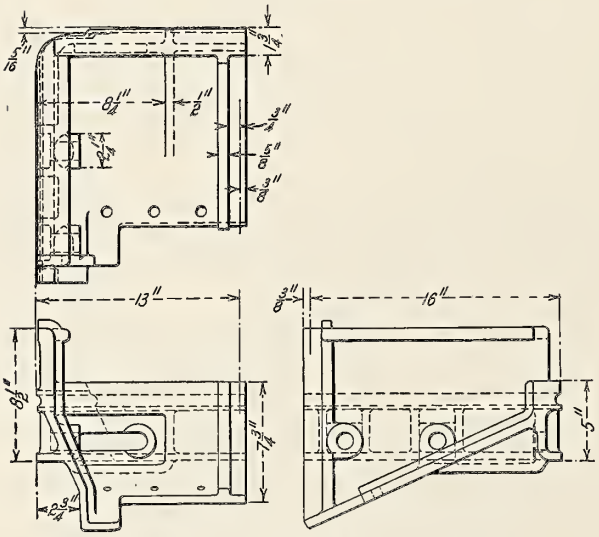

Fig. 474—Back Corner Ashpan Support.

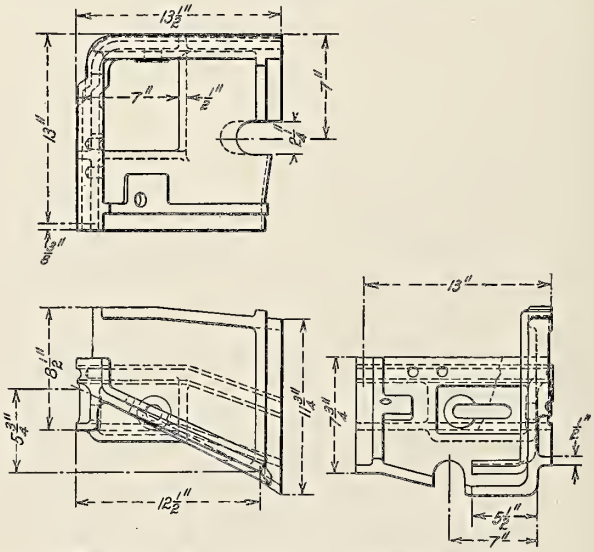

Fig. 475—Front Corner Ashpan Support.

Details of Self-Clearing Ashpan for Atlantic Type (4-4-2) Locomotive; Pennsylvania Railroad.

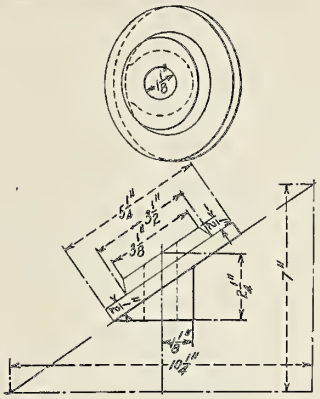

Fig. 476—Ashpan Support Washer.

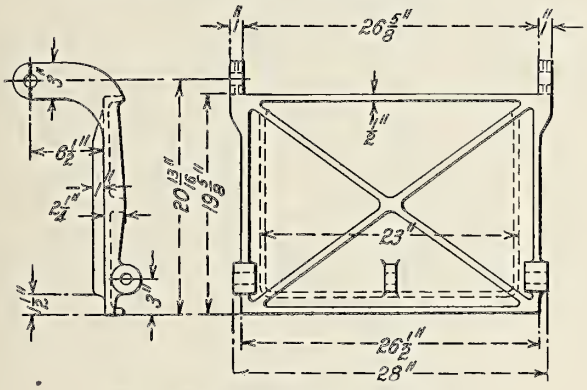

Fig. 478—Ashpan Hopper Door.

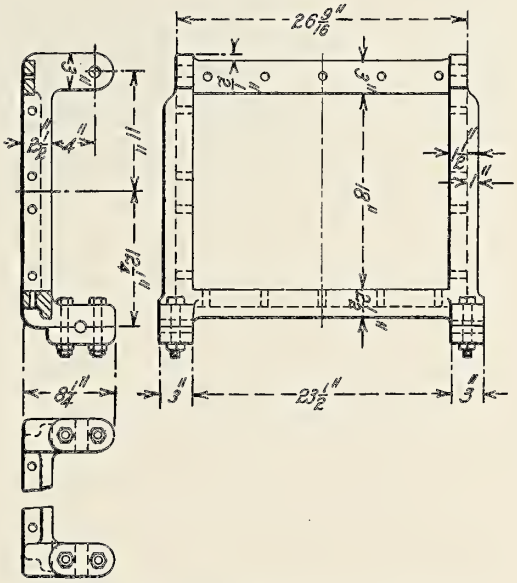

Fig. 477—Ashpan Hopper Door Frame.

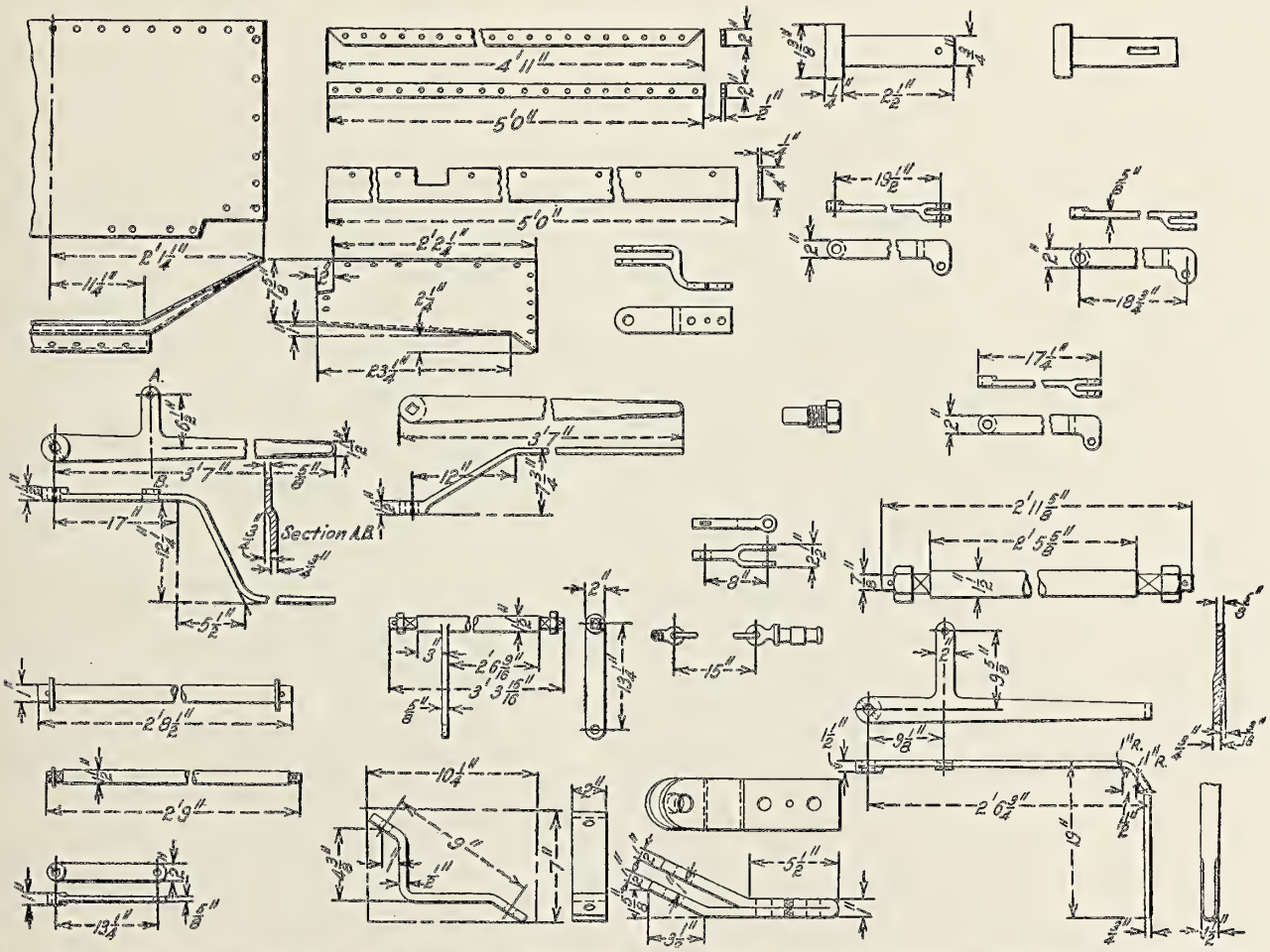

Fig. 479—Forged Details of Self-Clearing Ashpan for Atlantic Type (4-4-2) Locomotive; Pennsylvania Railroad.

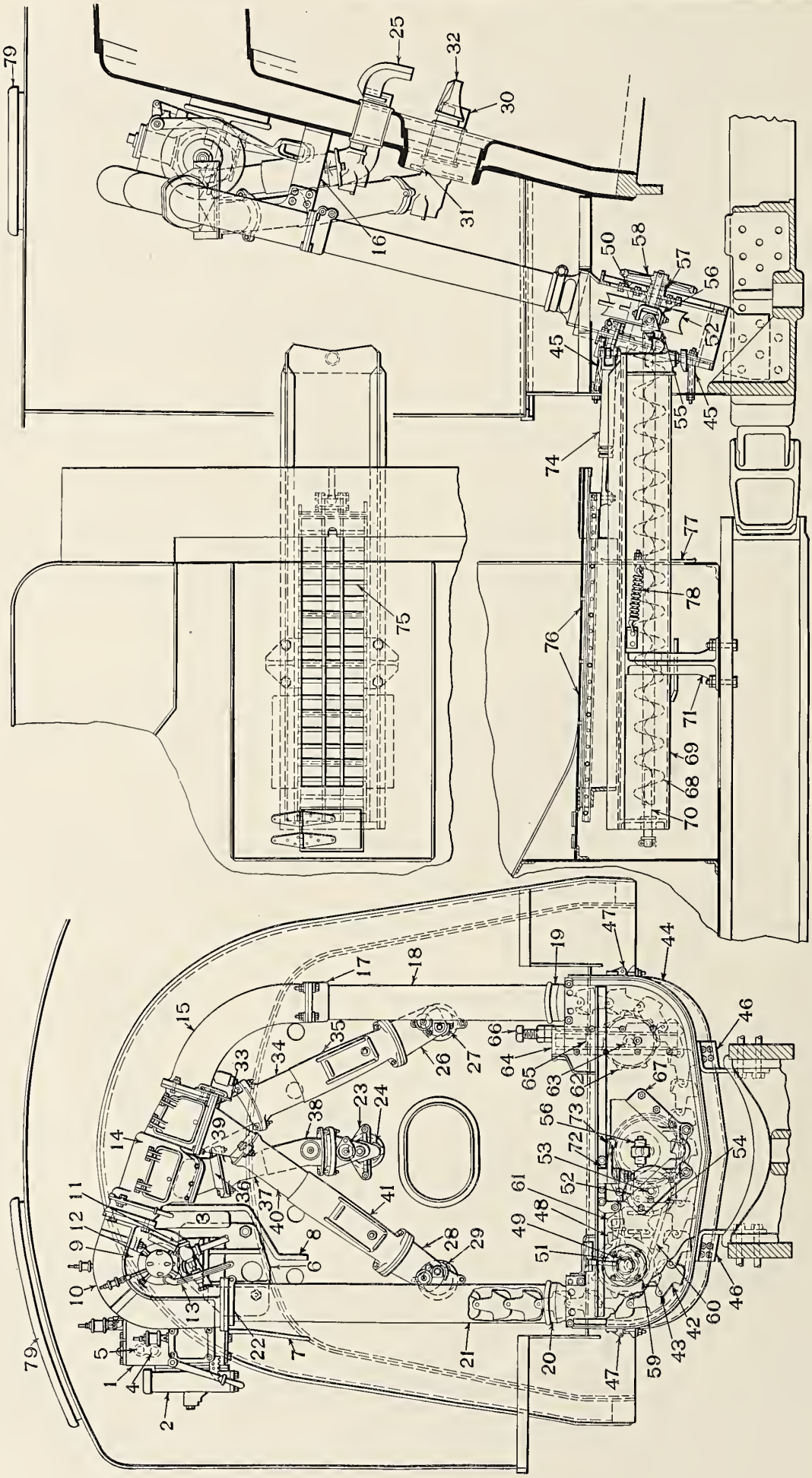

Fig. 480—General Arrangement of Street Stoker, Type "C"; Locomotive Stoker Company.

Numbers Refer to Names of Parts on Page 333.

Names of Parts of Street Stoker, Fig. 480.

1 *Elevator Engine*
2 *Main Bearing and Oil Separator*
3 *Elevator Engine Flywheel*
4 *Elevator Engine Exhaust Pipe*
5 *Elevator Engine Steam Pipe*
6 *Elevator Engine Bracket*
7 *Friction Clutch Handle*
8 *Friction Clutch Secondary Handle*
9 *Sprocket Wheel Casing and Friction Clutch*
10 *Sprocket Wheel Casing Cover*
11 *Controller Valve*
12 *Controller Cam*
13 *Controller Lever*
14 *Discharge Pipe*
15 *Pipe Bend*
16 *Pipe Bend Bracket*
17 *6-inch Elevator Pipe Flange*
18 *6-inch Elevator Pipe*
19 *6-inch Bell Mouth*
20 *7-inch Bell Mouth*
21 *7-inch Elevator Pipe*
22 *7-inch Elevator Pipe Flange*
23 *Center Distributor Elbow*
24 *Center Distributor Elbow Bottom*
25 *Center Distributor*
26 *Right Distributor Elbow*
27 *Right Distributor Elbow Bottom*
28 *Left Distributor Elbow*
29 *Left Distributor Elbow Bottom*
30 *Left and Right Distributor Tubes*
31 *Distributor Elbow Coupling Pins*
32 *Left and Right Distributors*
33 *Right Discharge Distributor*
34 *Upper Distributor Pipe, Right*
35 *Lower Distributor Pipe, Right*
36 *Center Discharge Distributor*
37 *Upper Distributor Pipe, Center*
38 *Lower Distributor Pipe, Center*
39 *Left Discharge Distributor*
40 *Upper Distributor Pipe, Left*
41 *Lower Distributor Pipe, Left*
42 *Elevator Buckets*
43 *Elevator Bucket Coupling Pin*
44 *Elevator Hopper*
45 *Elevator Hopper Cab Bracket Braces*
46 *Elevator Hopper Frame Braces, Right and Left*
47 *Elevator Hopper Door Catch*
48 *Conveyor Driving Sprocket*
49 *Elevator Hopper Main Shaft*
50 *Elevator Hopper Main Shaft Bearing, Front*
51 *Elevator Hopper Main Shaft Bearing, Back*
52 *Elevator Bucket Chain Idler*
53 *Elevator Bucket Chain Idler Shaft*
54 *Elevator Bucket Chain Idler Shaft Bearing*
55 *Elevator Bucket Chain Idler Shaft Collar*
56 *Universal Joint*
57 *Universal Joint Shaft Bearing*
58 *Screw Driving Sprocket*
59 *Chain Driving Sprocket*
60 *Screw Driving Chain*
61 *Screw Driving Chain Idler*
62 *Adjustable Sprocket Idler*
63 *Adjustable Sprocket Idler Shaft*
64 *Bearing Yoke Guide*
65 *Bearing Yoke*
66 *Adjusting Screw*
67 *Conveyor Trough Bracket*
68 *Conveyor Screw*
69 *Conveyor Trough*
70 *Conveyor Screw Shaft*
71 *Conveyor Trough Slide Support*
72 *Bell Crank Bracket*
73 *Screen Shaker Bell Crank*
74 *Screen Shaker Rod*
75 *Tender Screen*
76 *Slide Plates*
77 *Wind Shield*
78 *Wind Shield Spring*
79 *Ventilator, to allow Elevator Engine to be lifted through Cab Roof*

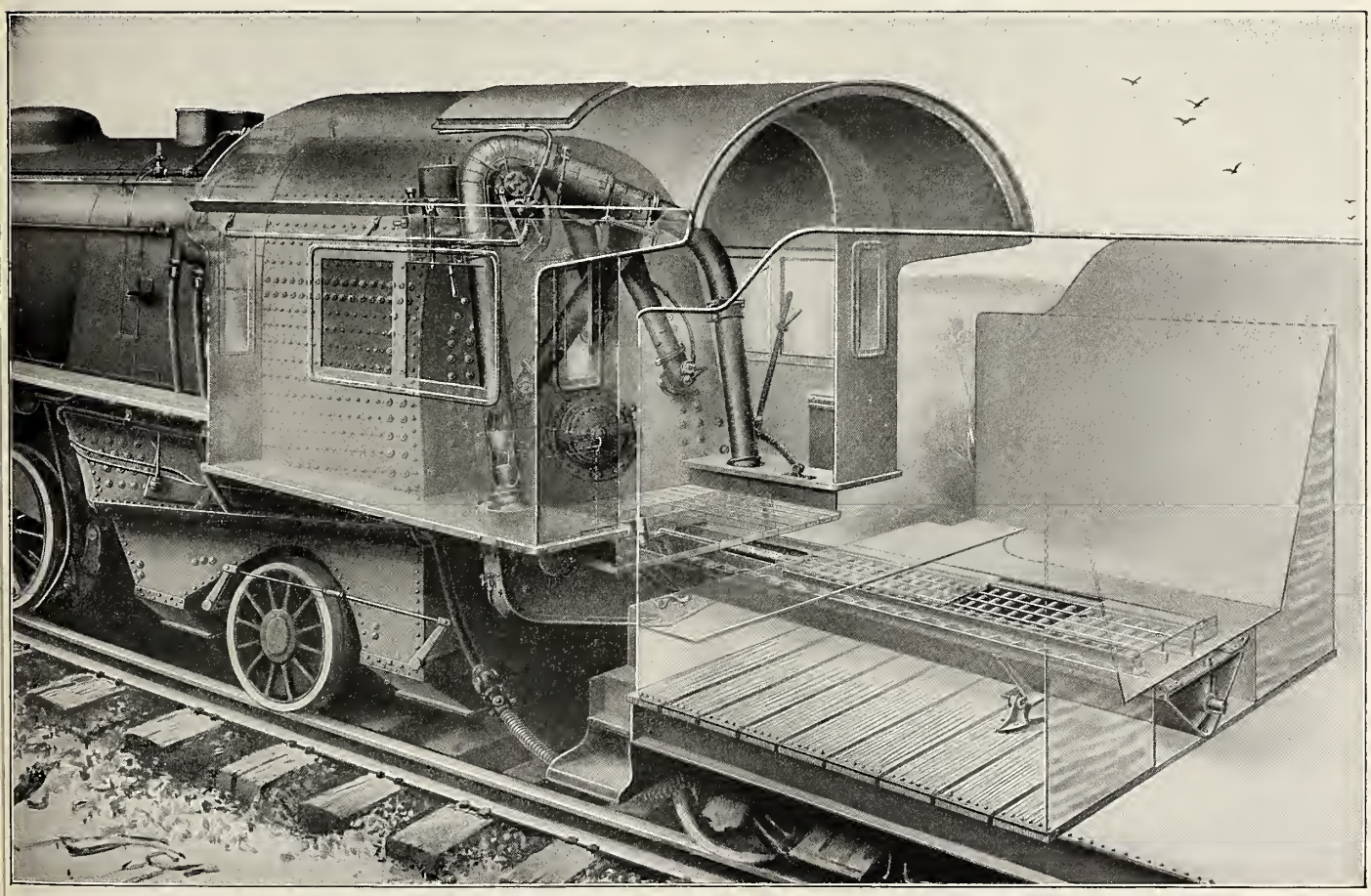

Fig. 481—Street Type "C" Stoker Applied to a Locomotive; Locomotive Stoker Company.

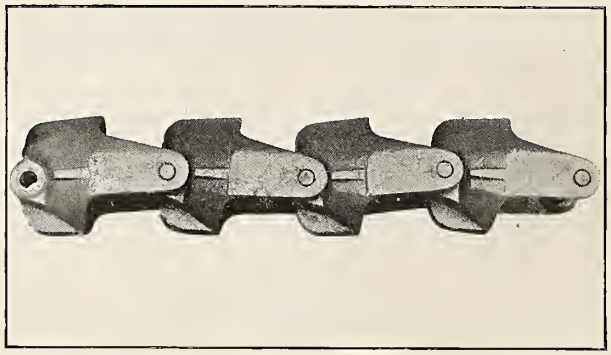

Fig. 482—Elevator Buckets, Street Type "C" Stoker; Locomotive Stoker Company.

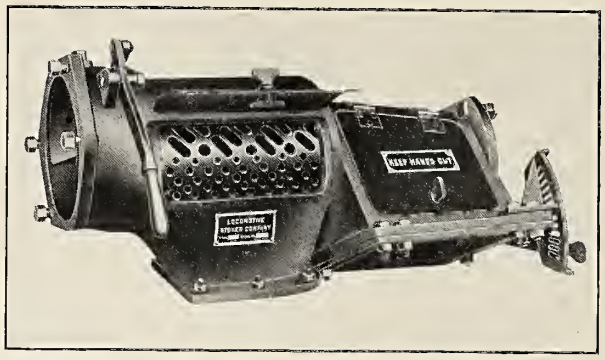

Fig. 483—Discharge Pipe with Door Open, Showing Screen, Street Type "C" Stoker; Locomotive Stoker Company.

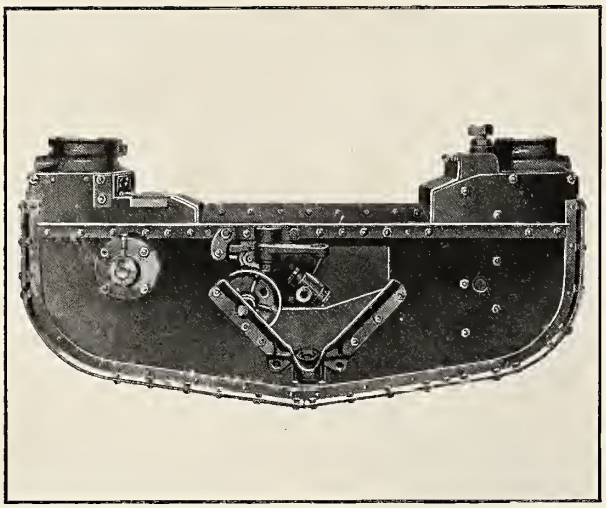

Fig. 484—Hopper, Street Type "C" Stoker; Locomotive Stoker Company.

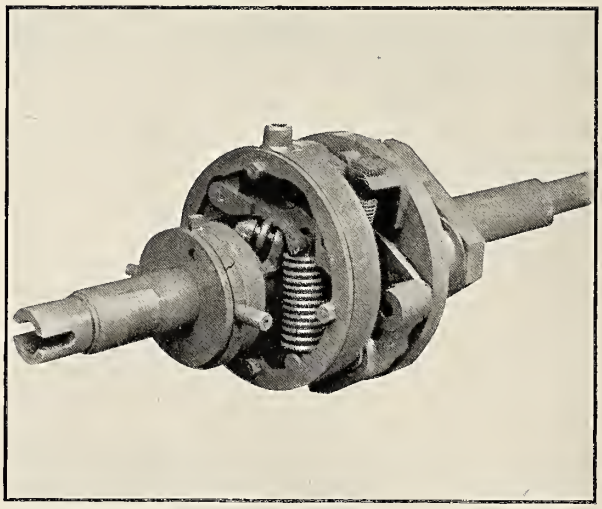

Fig. 485—Engine Governor, Street Type "C" Stoker; Locomotive Stoker Company.

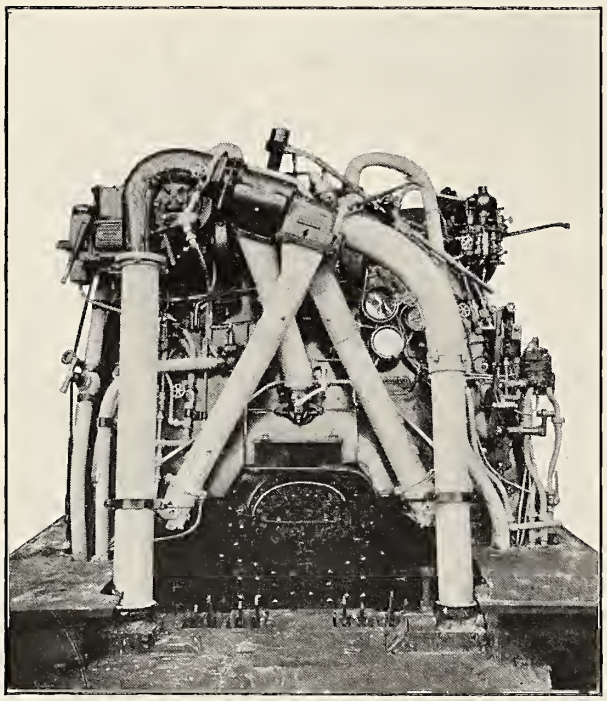

Fig. 486—View Inside Cab, Showing Street Type "C" Stoker; Locomotive Stoker Company.

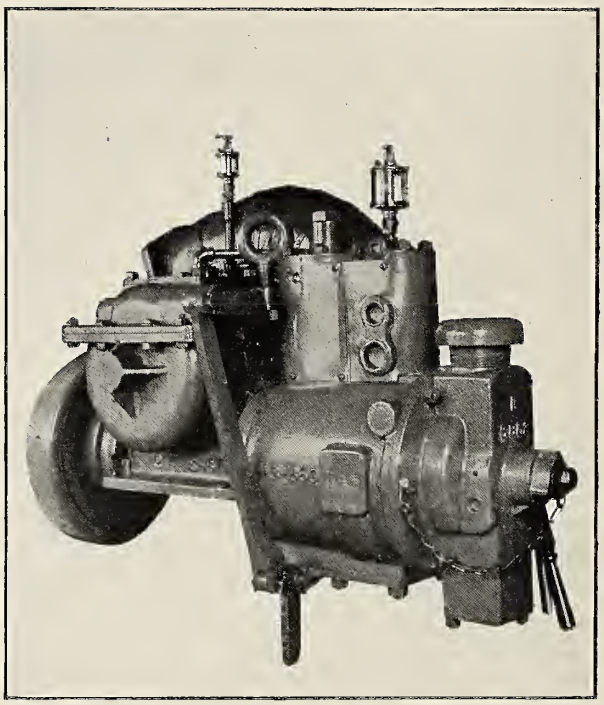

Fig. 487—Back View of Engine, Street Type "C" Stoker; Locomotive Stoker Company.

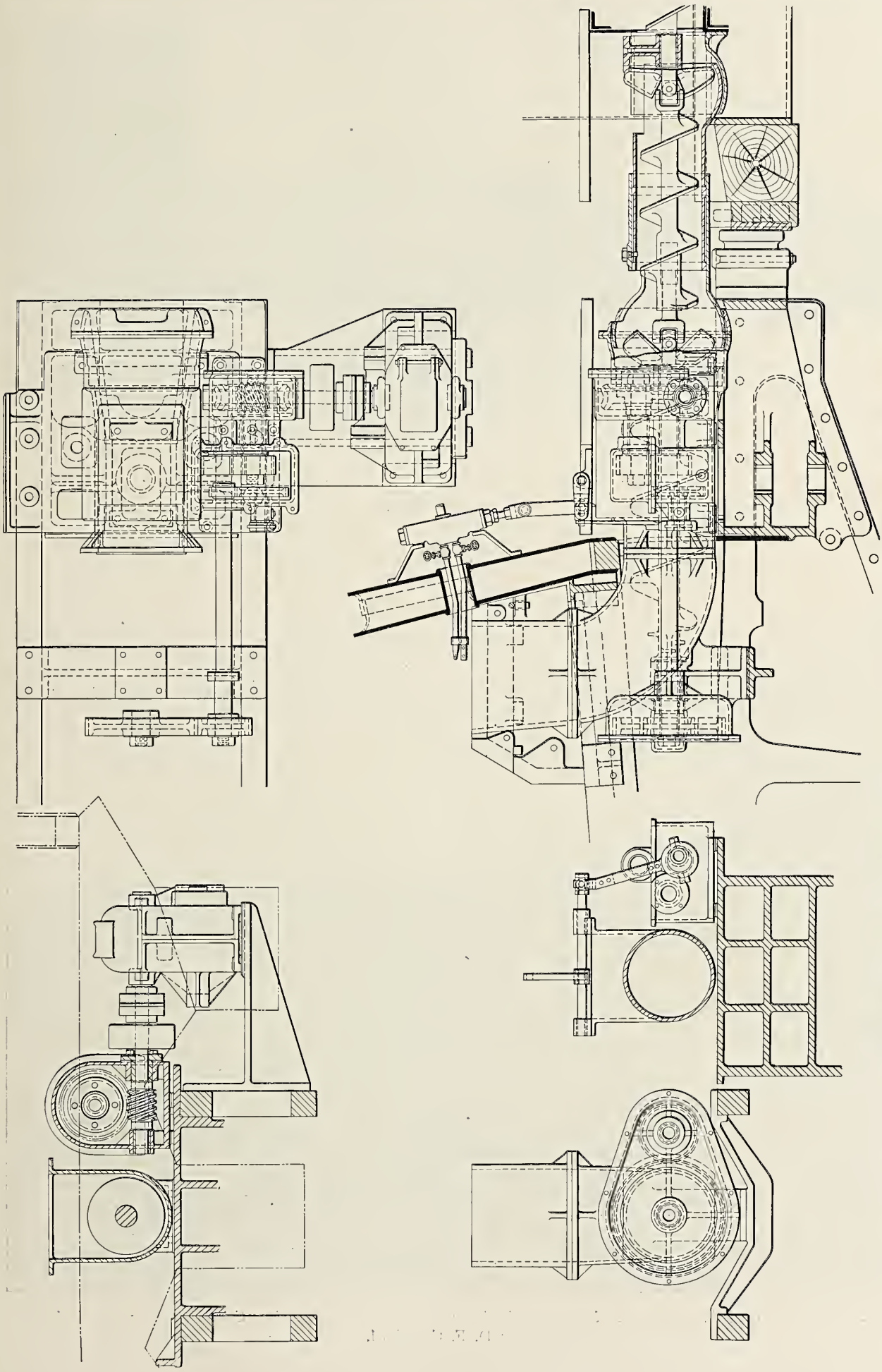

Fig. 488—General Arrangement of Standard Stoker, Type "B"; Standard Stoker Company.

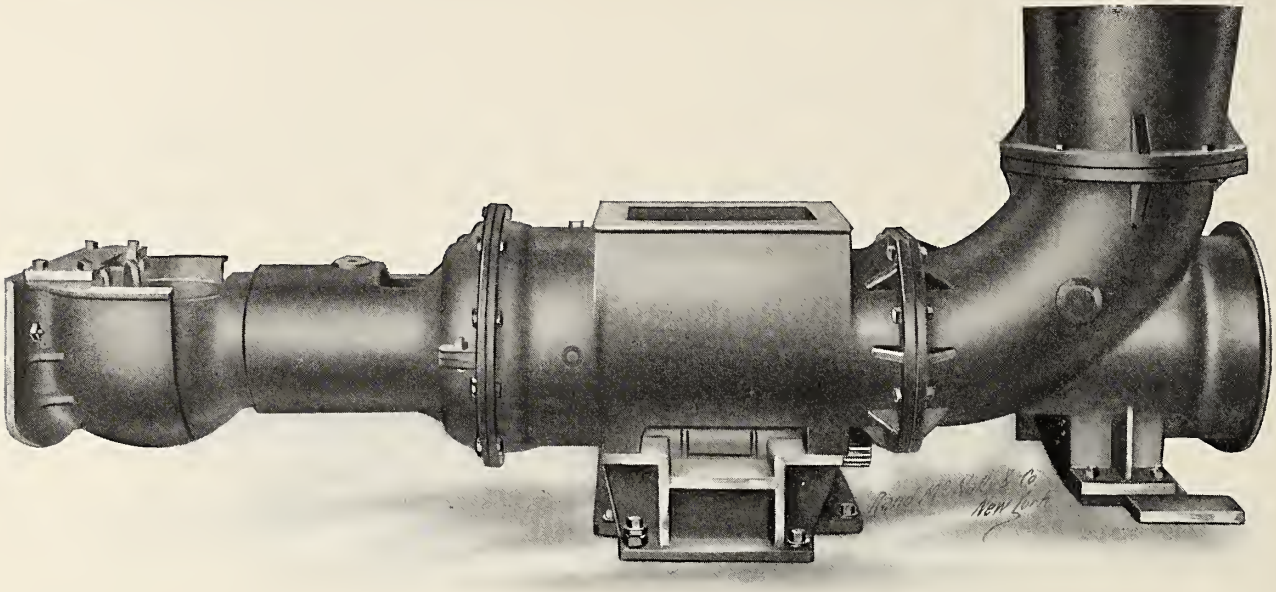

Fig. 489—Horizontal and Vertical Conveyors Enclosed in Casing, Standard Type "B" Stoker; Standard Stoker Company.

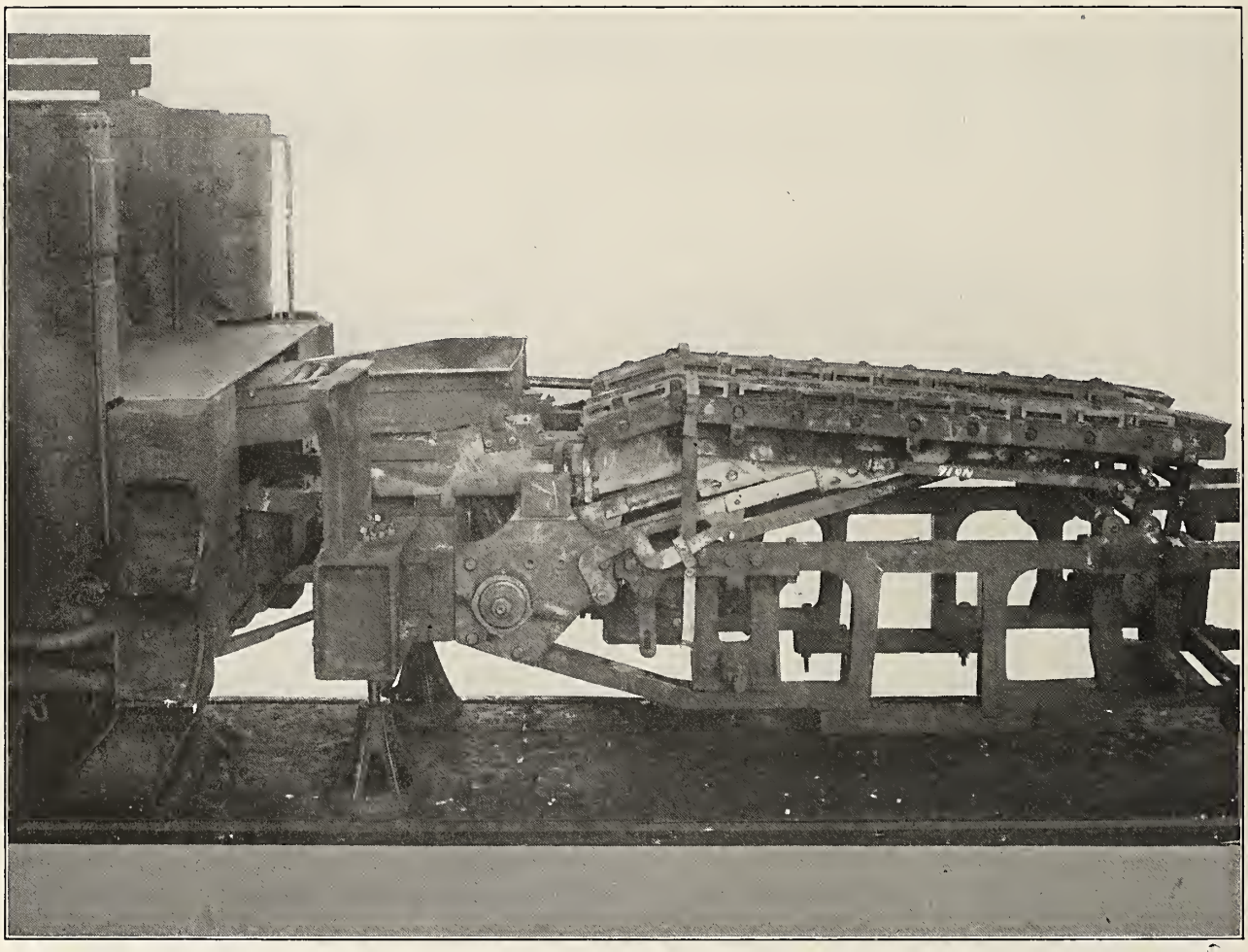

Fig. 490—General Arrangement of the Crawford Underfeed Stoker, Showing Coal Conveyer and Stoker Plunger; D. F. Crawford.

Names of Parts of Crawford Stoker Conveyor, Fig. 494.

1 *Conveyor—Long Driving Rods*
2 *Conveyor Crusher*
3 *Conveyor Crusher Hopper*
4 *Conveyor Crusher Hopper Studs*
5 *Conveyor Lower Long Connector*
6 *Conveyor Rocker Arm*
7 *Conveyor Rock Arm Fulcrum Bracket*
8 *Conveyor Upper Short Connector*
9 *Conveyor Single Tree*
10 *Conveyor Single Tree Fulcrum*
11 *Conveyor Crusher Single Tree*
12 *Conveyor Trough*
13 *Conveyor Carrier*
14 *Conveyor Paddles*
15 *Conveyor Trunnion*
16 *Conveyor Trunnion Support*
17 *Conveyor Coal Cut-off—Operating Shaft*
18 *Conveyor Coal Cut-off—Operating Lever*
19 *Conveyor Coal Cut-off—Lever Arm*
20 *Conveyor Coal Cut-off—Connector*
21 *Conveyor Coal Cut-off—Cross Bar*
22 *Conveyor Coal Cut-off—Slide*
23 *Conveyor Coal Cut-off—Guide*
24 *Conveyor Coal Cut-off—Rocker Arm Guides*
25 *Conveyor Coal Cut-off—Operating Shaft Bearings*
26 *Conveyor Coal Cut-off—Operating Handle*
27 *Conveyor Coal Cut-off—Operating Handle Stop Latch*

Names of Parts of Crawford Stoker, Fig. 495.

A *Stoker Engine*
B *Main Shaft*
C *Main Shaft Bearing*
D *Crank Arm*
E *Main Driving Arm*
F *Main Plunger*
G *Main Plunger Hopper*
H *Main Plunger Cross Bar*
I *Main Plunger Connection Link*
J *Auxiliary Plunger Connecting Link—Rear*
K *Auxiliary Plunger Intermediate Connecting Link*
L *Auxiliary Plunger Front Connecting Link*
M *Auxiliary Plungers*
N *Auxiliary Plunger Agitators*
O *Trough*
P *Side Dead Grates*
Q *Trough Dead Grates*
R *Shaking Grates (Side and Center)*
S *Grate Shaking Shafts*
T *Grate Shaking Shaft Supports*
U *Grate Shaking Levers*
V *Grate Shaking Lever Lock*

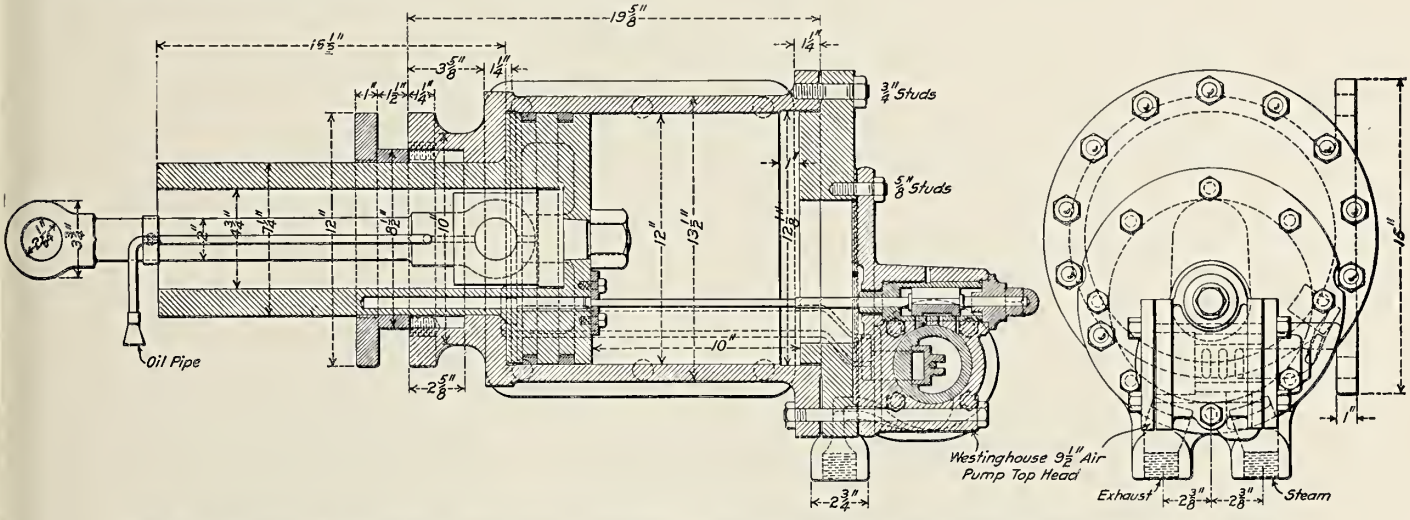

Fig. 491—Details of Plunger Operating Cylinder for the Crawford Locomotive Stoker; D. F. Crawford.

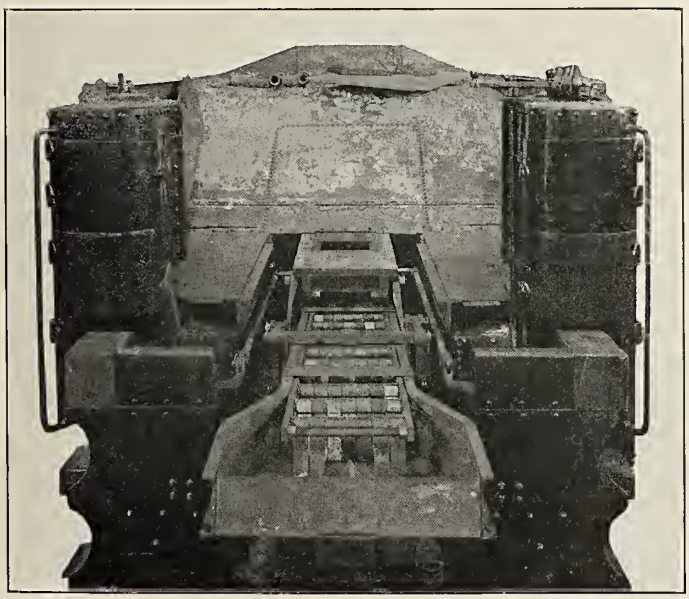

Fig. 492—General Arrangement of Coal Conveyor for the Crawford Underfeed Stoker.

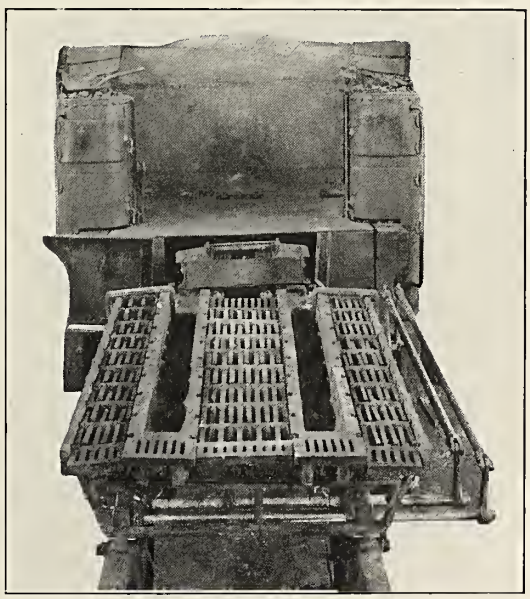

Fig. 493—General Arrangement of Grates for the Crawford Underfeed Stoker.

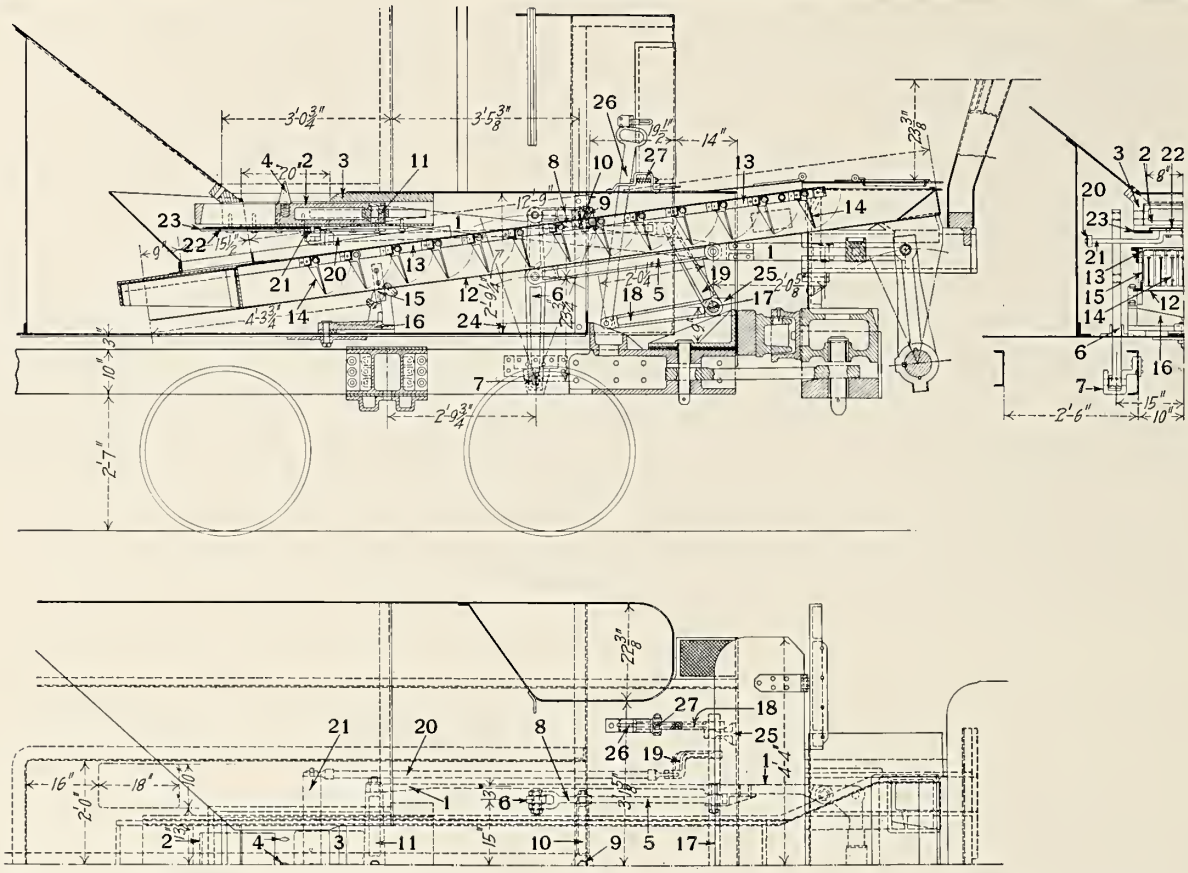

Fig. 494—Conveyor for Crawford Underfeed Stoker as Applied to Consolidation (2-8-0) Locomotives on the Pennsylvania; D. F. Crawford.

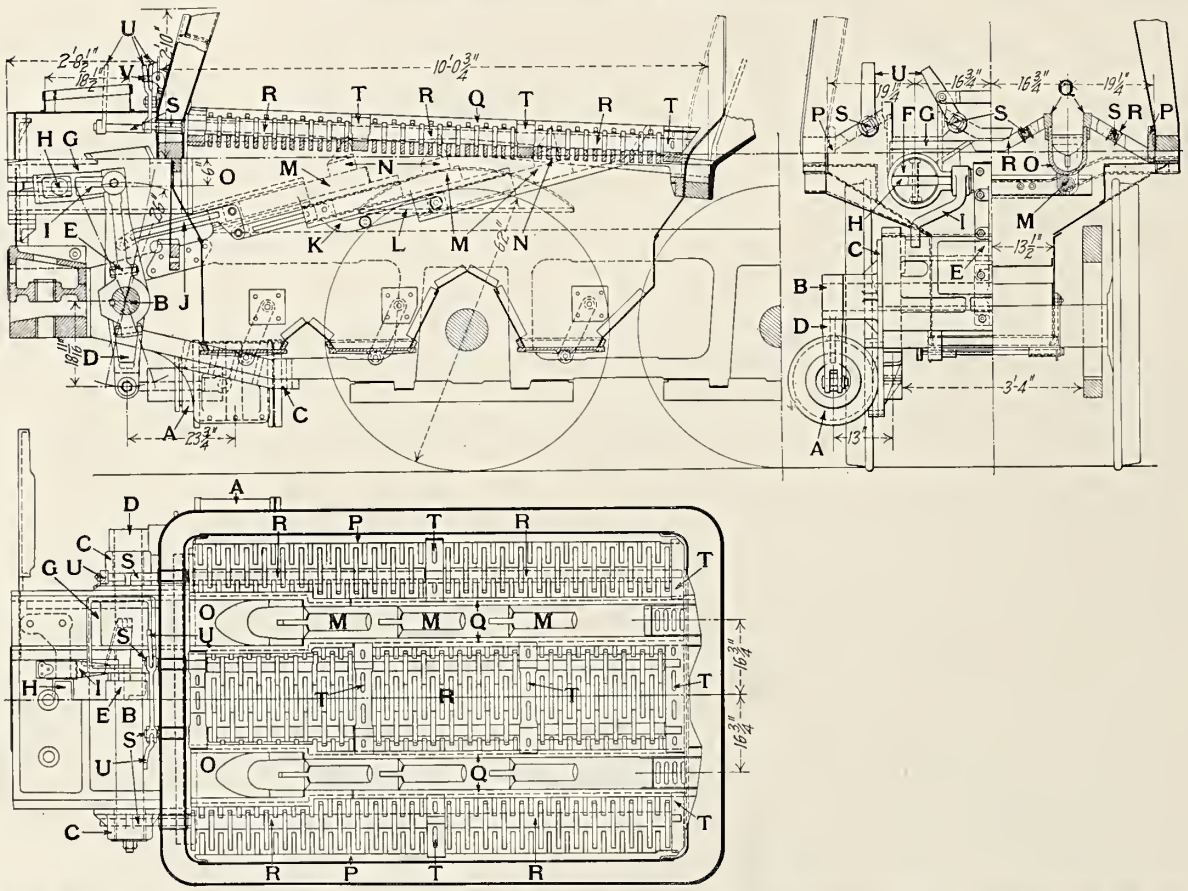

Fig. 495—Crawford Double Underfeed Stoker as Applied to Consolidation (2-8-0) Locomotives on the Pennsylvania; D. F. Crawford.

Numbers Refer to Names of Parts on Page 337.

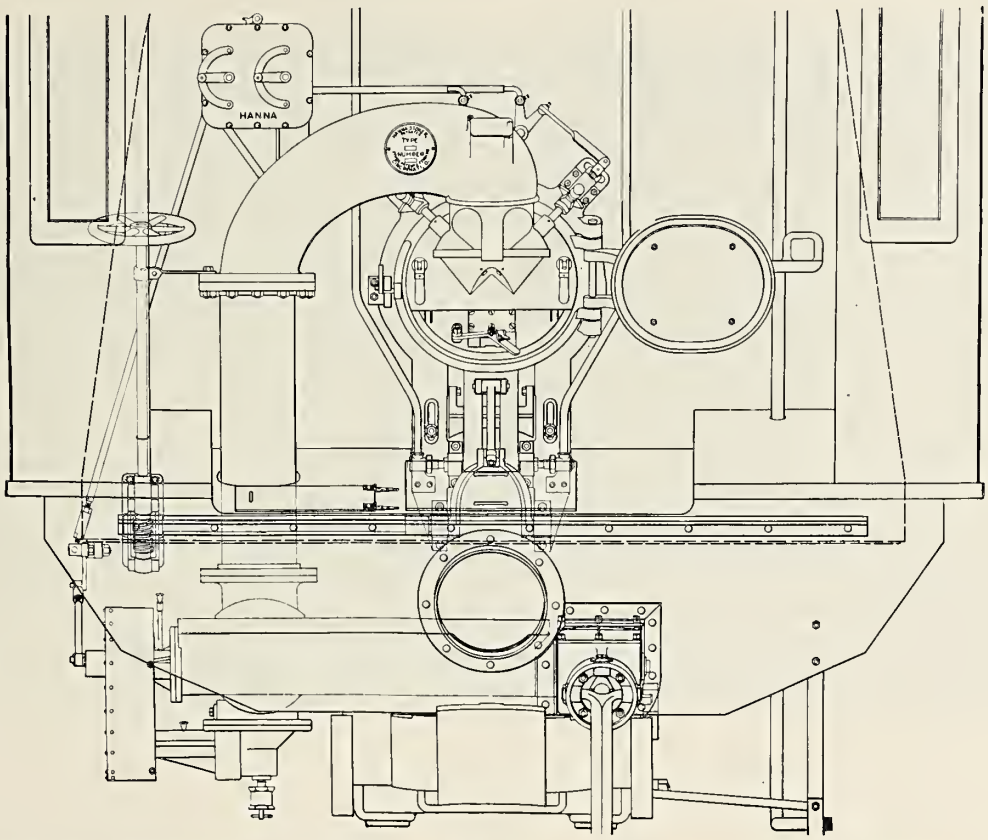

Fig. 496—Arrangement of Hanna Stoker in Cab; Hanna Locomotive Stoker Company.

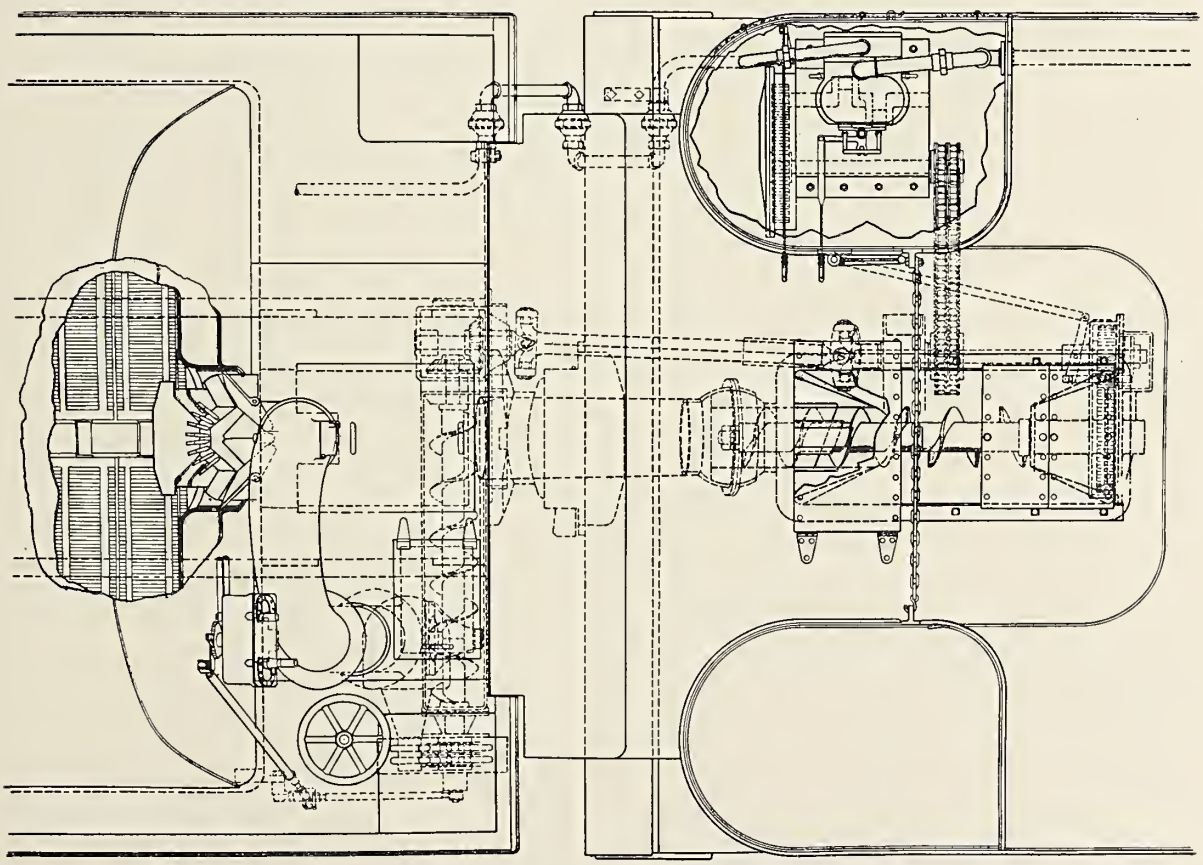

Fig. 497—General Arrangement of Hanna Stoker; Hanna Locomotive Stoker Company.

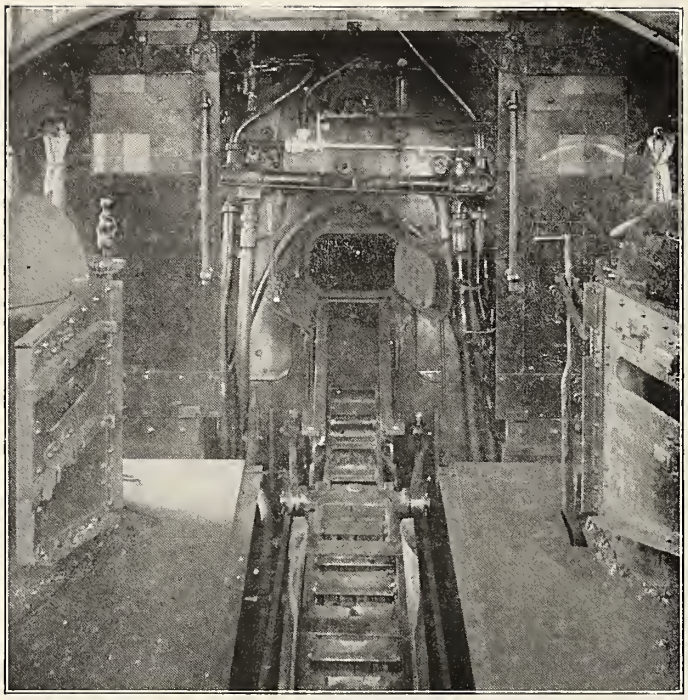

Fig. 498—Arrangement of Conveyor on Gee Stoker; N. E. Gee.

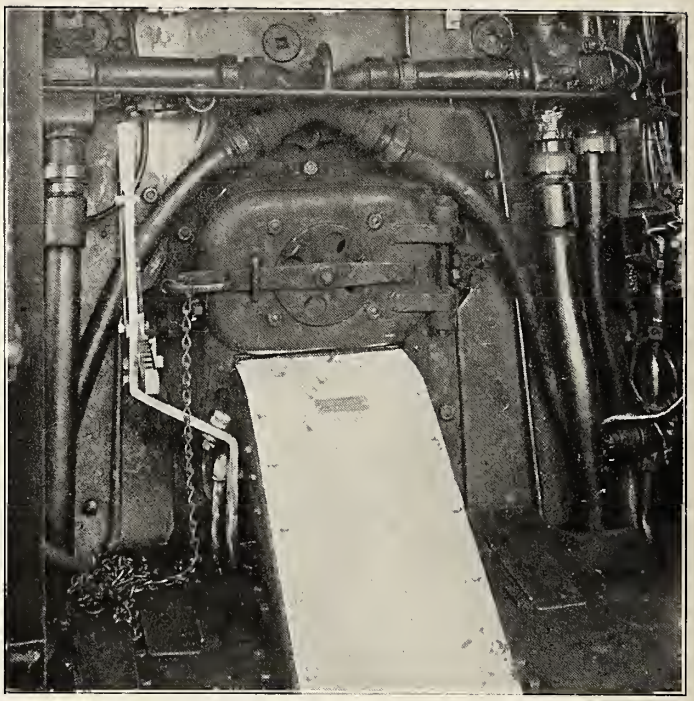

Fig. 499—Arrangement of Gee Stoker in Cab; N. E. Gee.

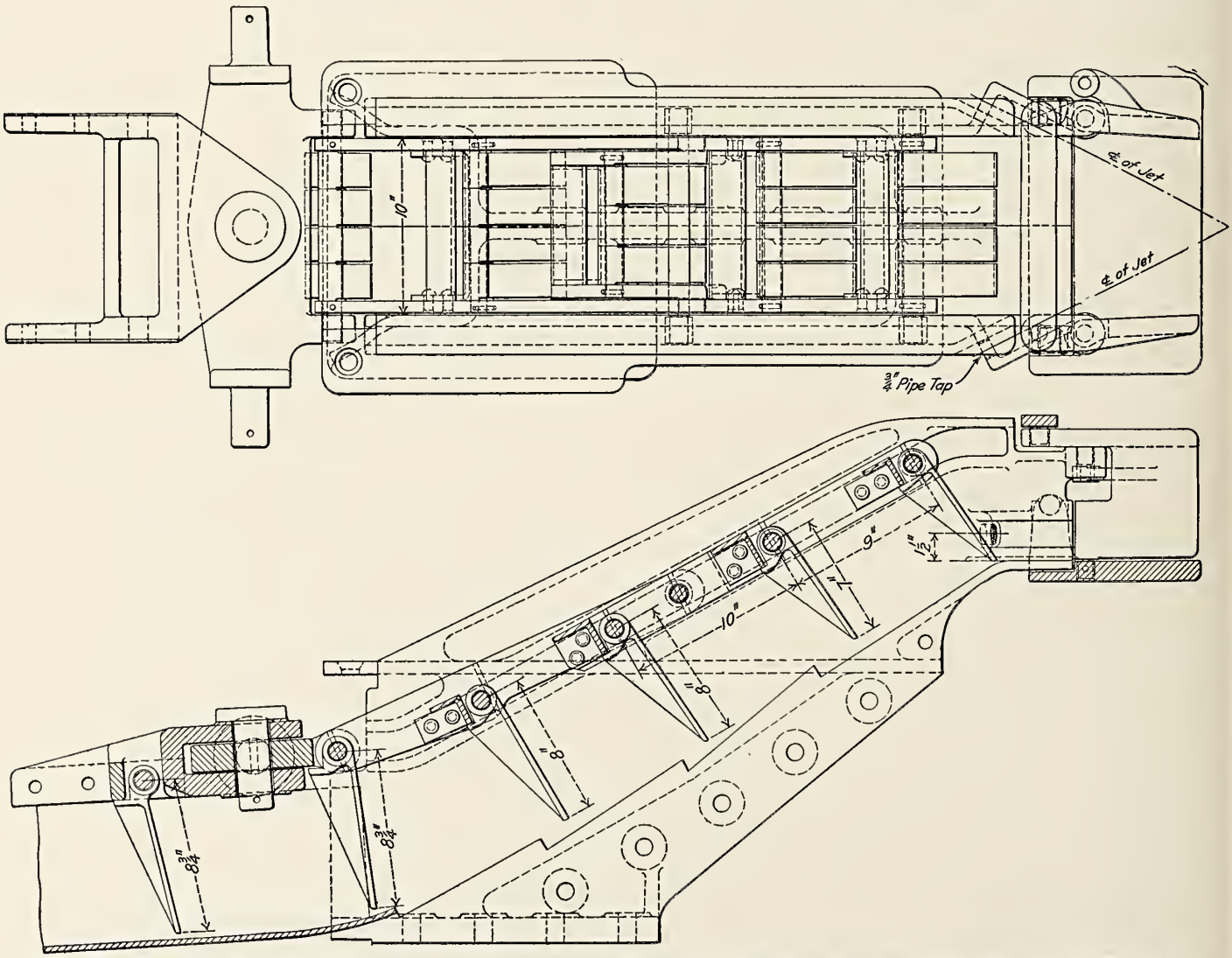

Fig. 500—Forward End of Conveyor and Arrangement of Jets and Deflecting Wings on Gee Stoker; N. E. Gee.

Names of Parts of Frames, Figs. 504-508.

1 *Front End Slab*
2 *Cylinder Seat*
3 *Pedestal*
4 *Pedestal Brace, Binder or Cap*
5 *Pedestal Tie Bolt*
6 *Frame Splice*
7 *Frame Splice Key*
8 *Frame Filling or Equalizer Fulcrum*
9 *Rear Frame*
10 *Rear Frame Separator*
11 *Trailing Truck Box Guide*
11a *Trailing Truck Box Pedestal*
12 *Upper Frame Rail*
12a *Lower Frame Rail*
13 *Frame Crosstie*
16 *Reverse Shaft Bearing Box*
17 *Brake Lever Fulcrum Bracket*
19 *Expansion Pad Clamp*

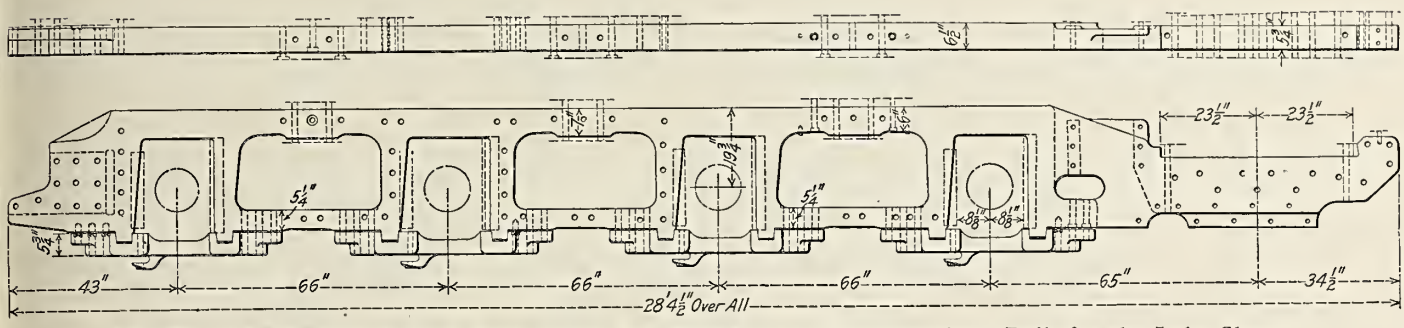

Fig. 501—Vanadium Cast Steel Main Frame for Mikado (2-8-2) Locomotive. Built for the Lake Shore & Michigan Southern by the American Locomotive Company.

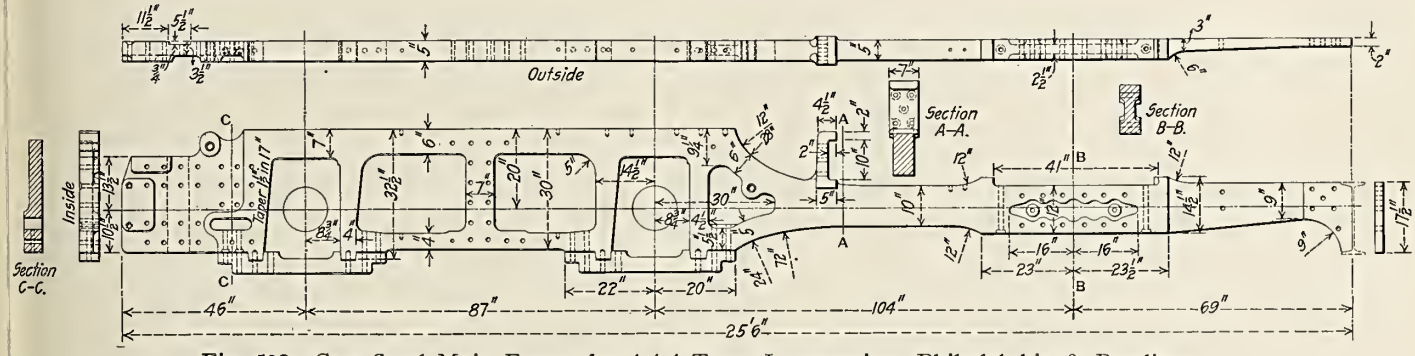

Fig. 502—Cast Steel Main Frame for 4-4-4 Type Locomotive; Philadelphia & Reading.

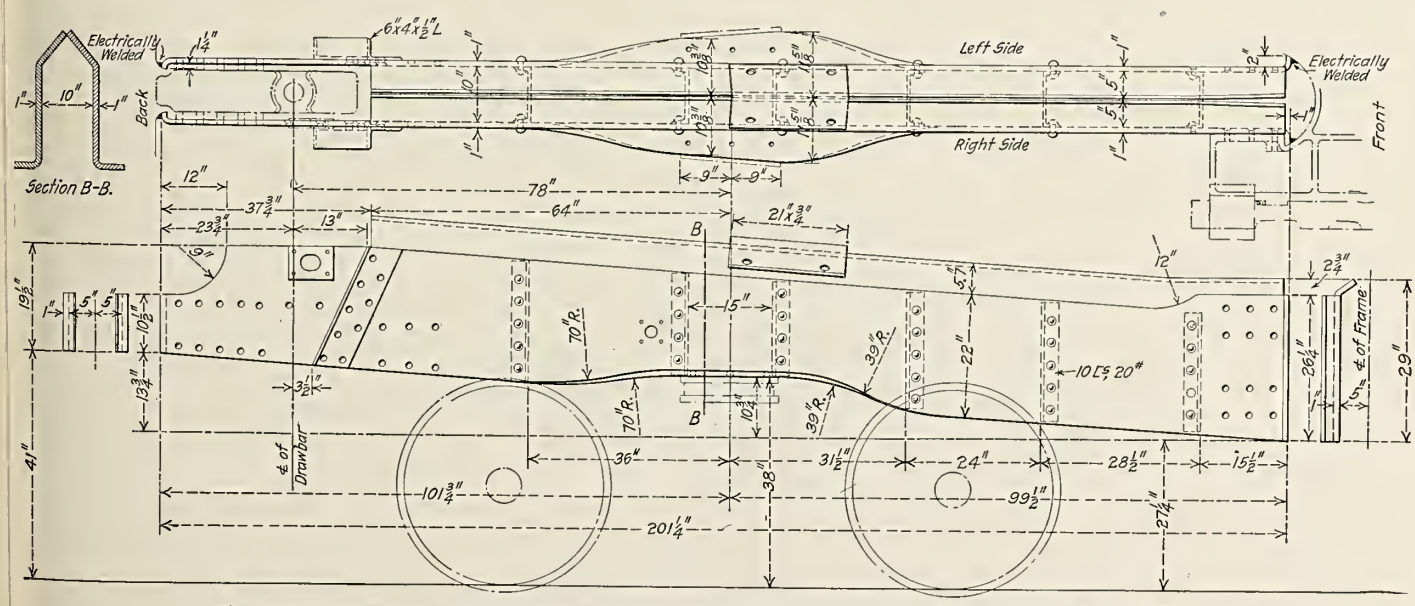

Fig. 503—Rolled Steel Back Frame for 4-4-4 Type Locomotive; Philadelphia & Reading.

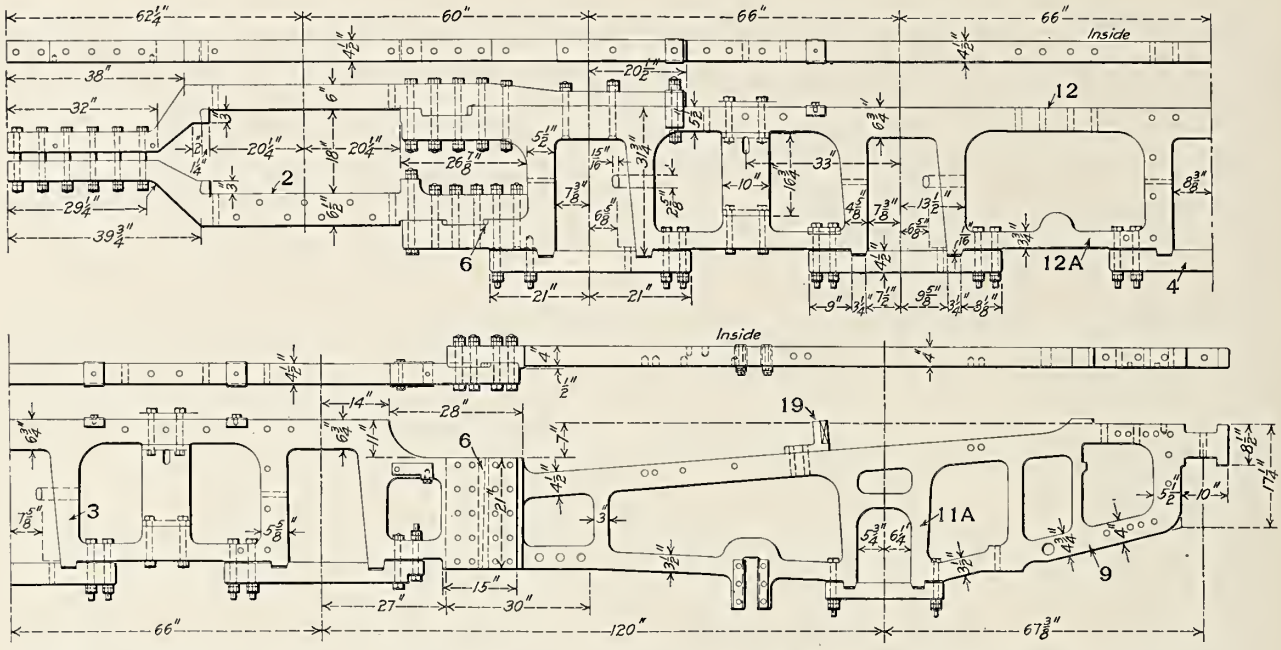

Fig. 504—Cast Steel Frame for Mikado (2-8-2) Locomotive. Built for the Illinois Central by the Baldwin Locomotive Works.

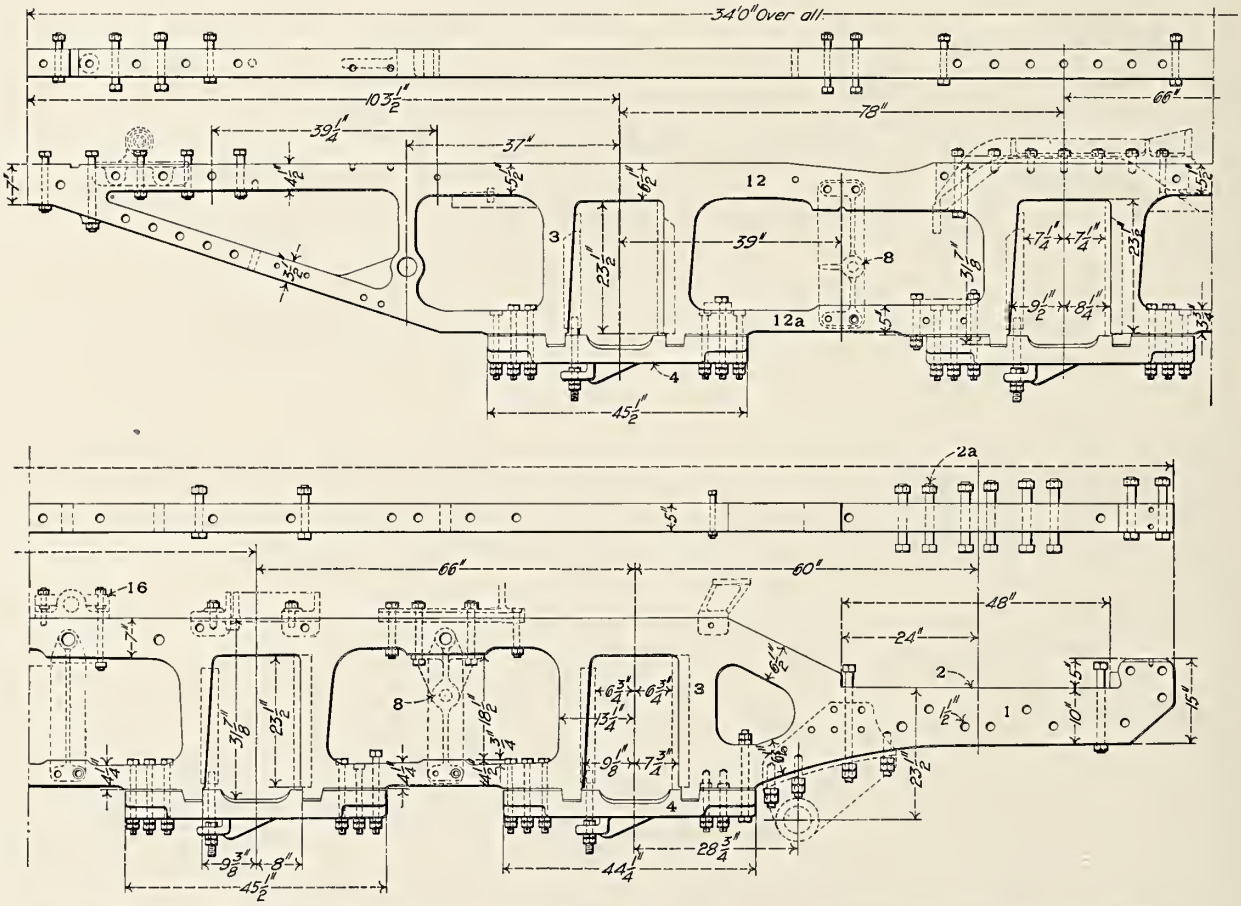

Fig. 505—Typical Cast Steel Frame for Consolidation (2-8-0) Locomotive; American Locomotive Company.

(*See Figs.* 541-550 *for details.*)

Numbers Refer to Names of Parts on Page 341.

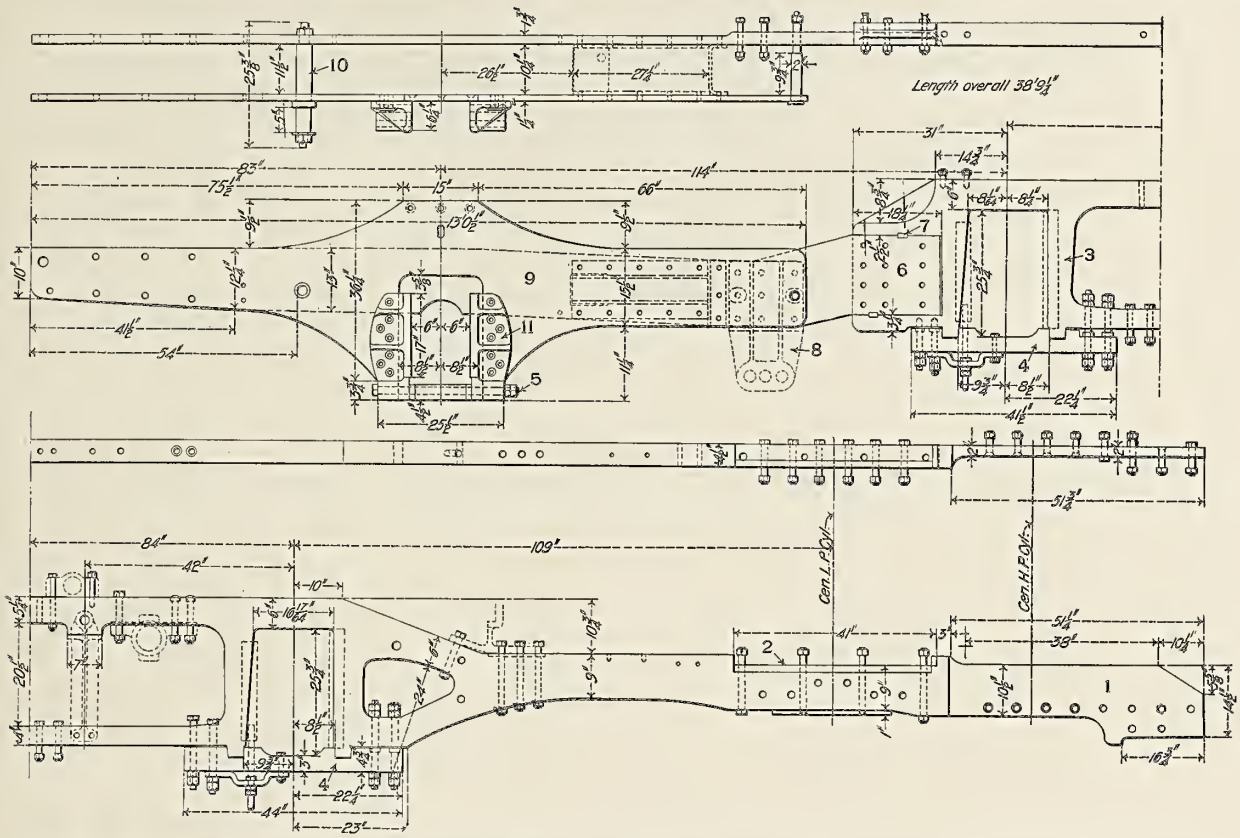

Fig. 506—Cast Steel Frame for Atlantic Type (4-4-2) Locomotive; American Locomotive Company.

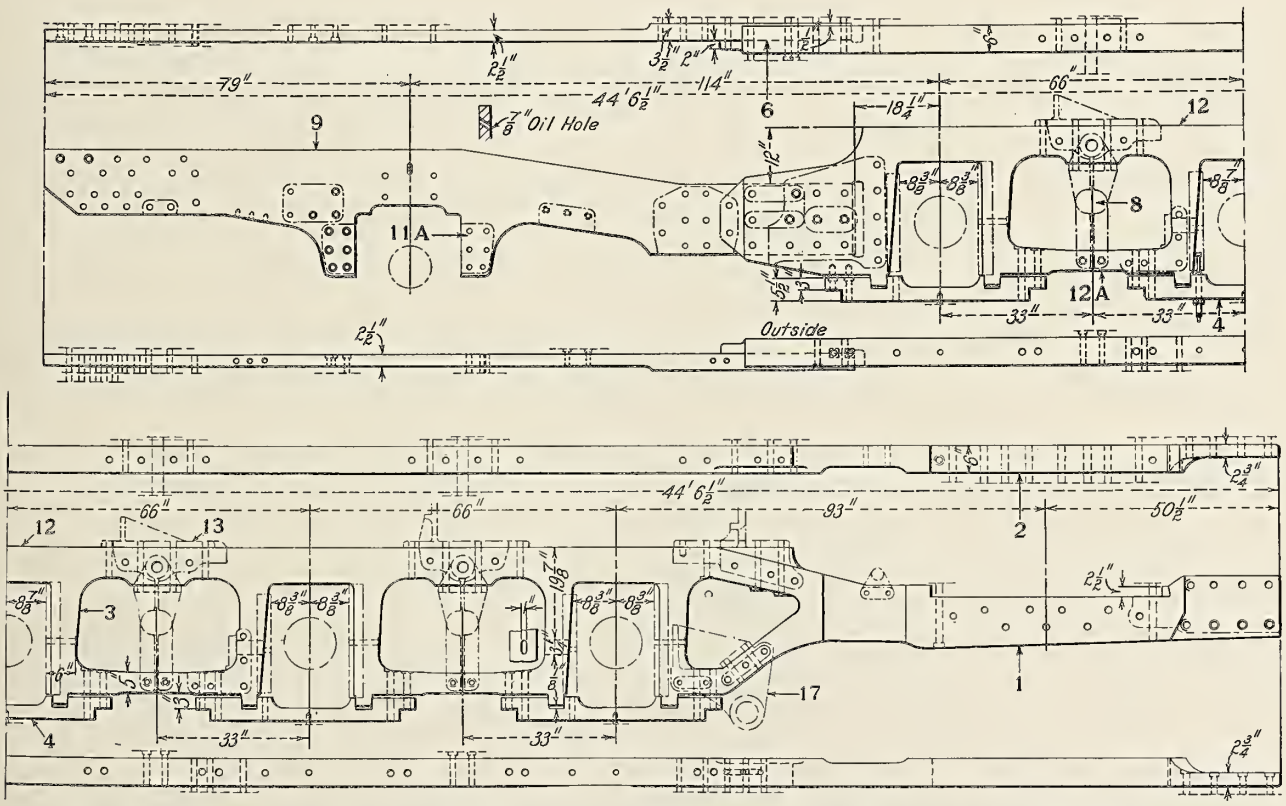

Fig. 507—Cast Steel Frame for Mountain Type (4-8-2) Locomotive. Built for the Chesapeake & Ohio by the American Locomotive Company.

Numbers Refer to Names of Parts on Page 341.

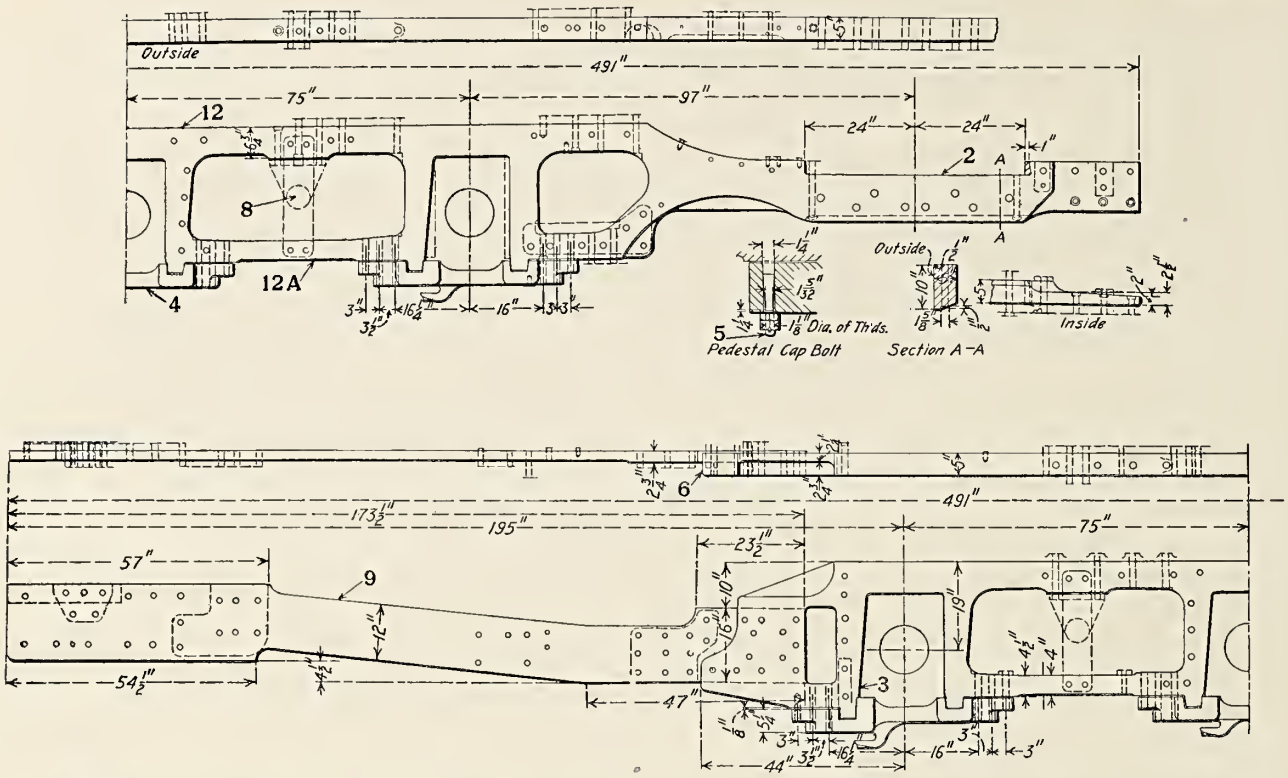

Fig. 508—Cast Steel Frame for Pacific Type (4-6-2) Locomotive. Built for the New York Central & Hudson River by the American Locomotive Company.

(See Figs. 559-561 for Details.)

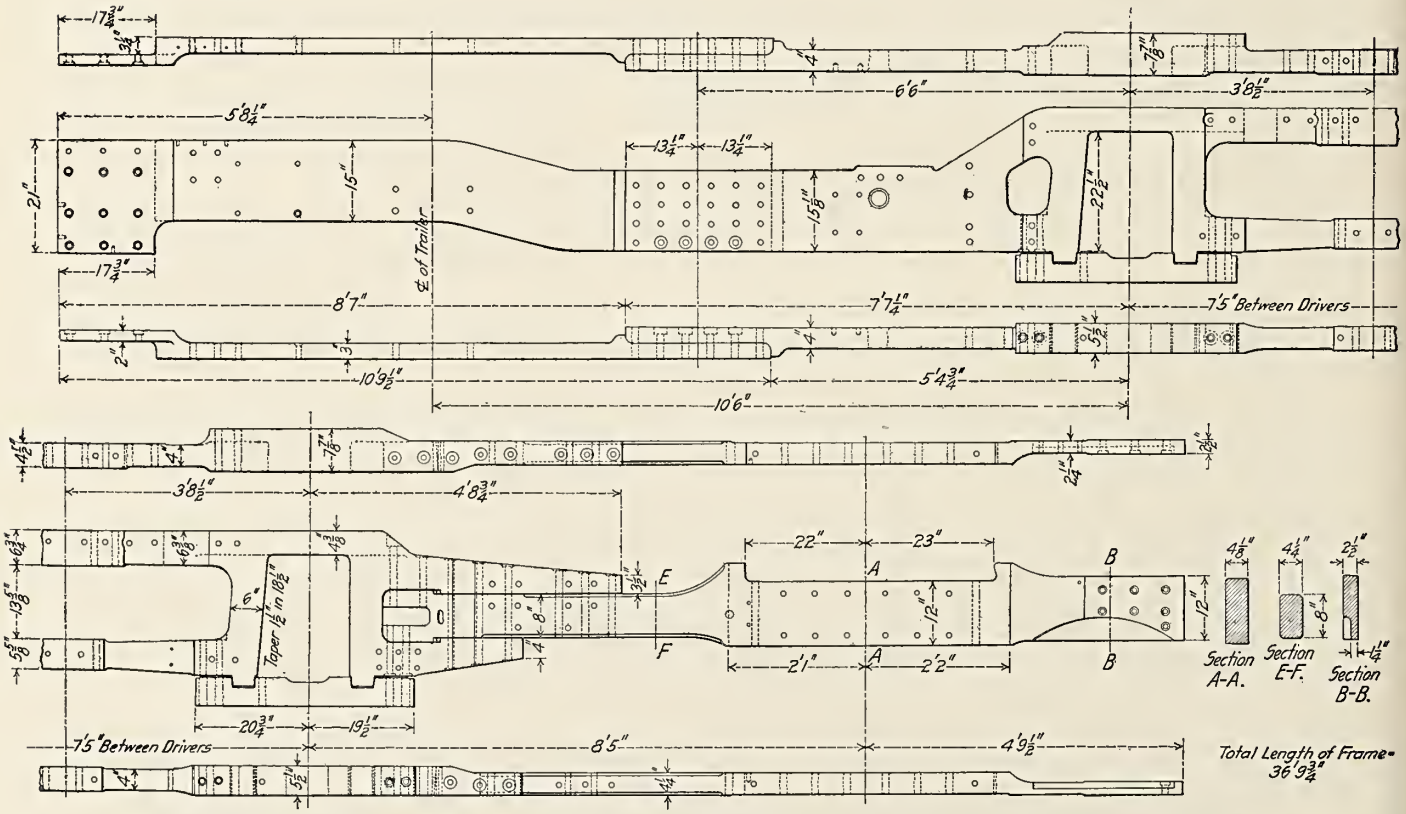

Fig. 509—Cast Steel Frame for Class E-6 Atlantic Type (4-4-2) Locomotive; Pennsylvania Railroad.

Numbers Refer to Names of Parts on Page 341.

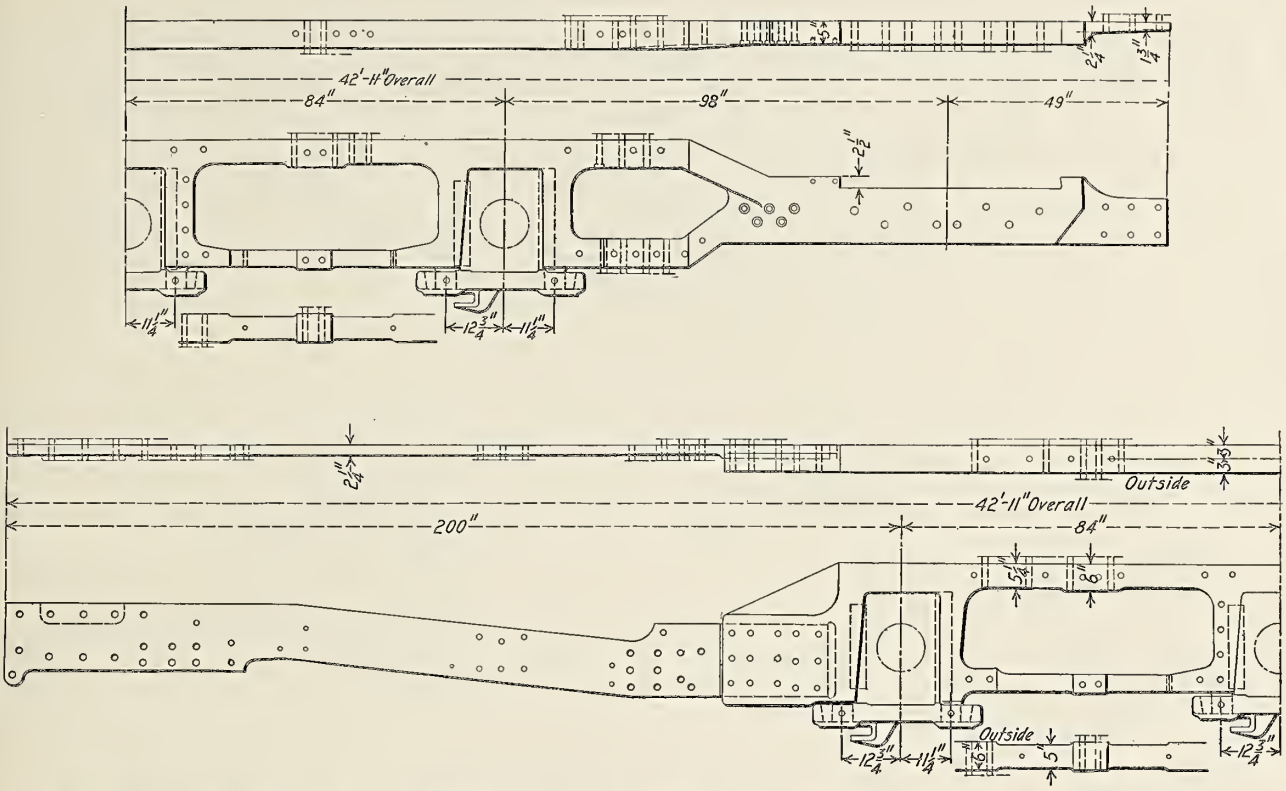

Fig. 510—Vanadium Cast Steel Frame for Pacific Type (4-6-2) Locomotive No. 50,000. Built for Experimental Purposes by the American Locomotive Company.

(*See Figs.* 525-528 *for Details.*)

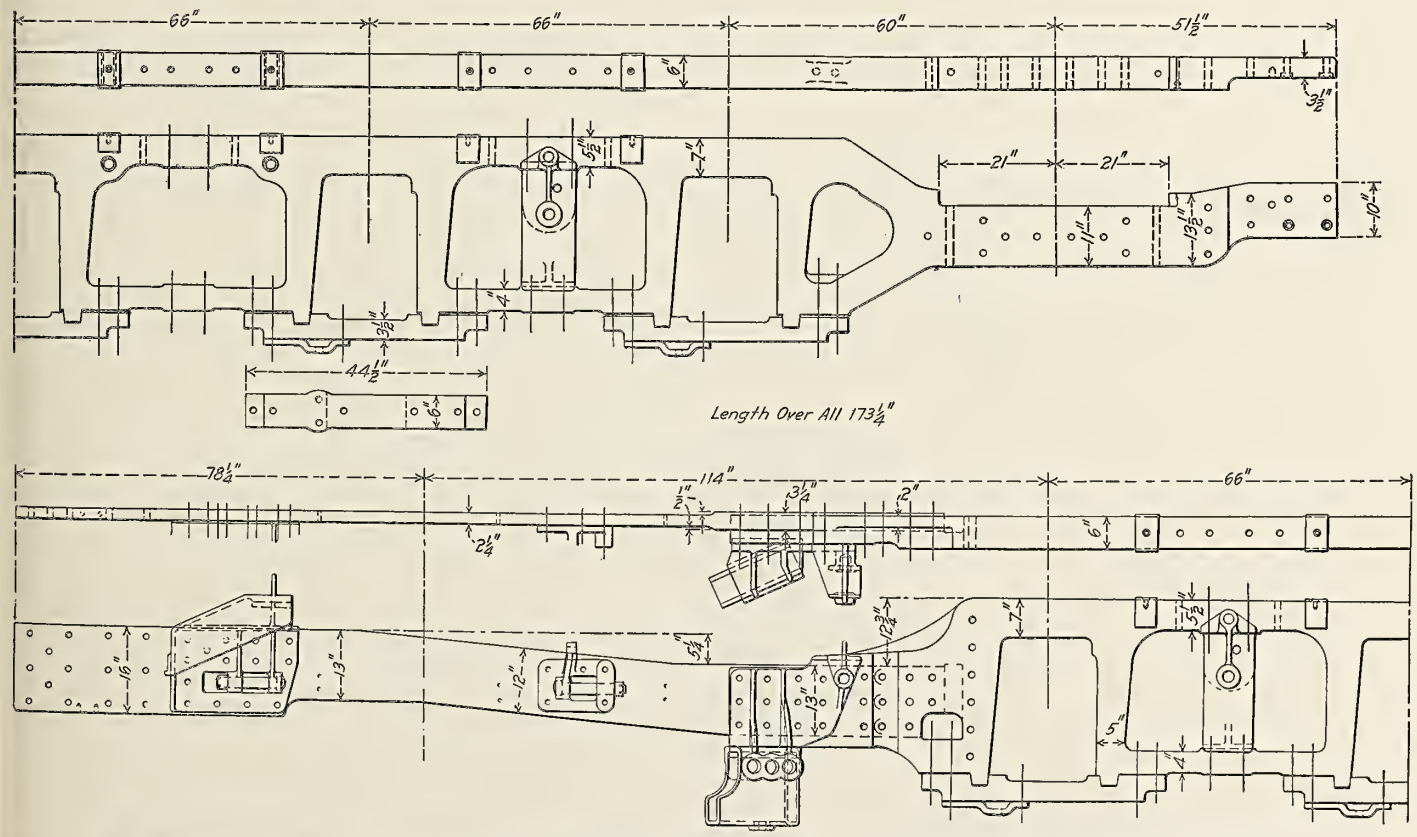

Fig. 511—Vanadium Cast Steel Frame for Mikado (2-8-2) Locomotive. Built for the Erie by the Baldwin Locomotive Works.

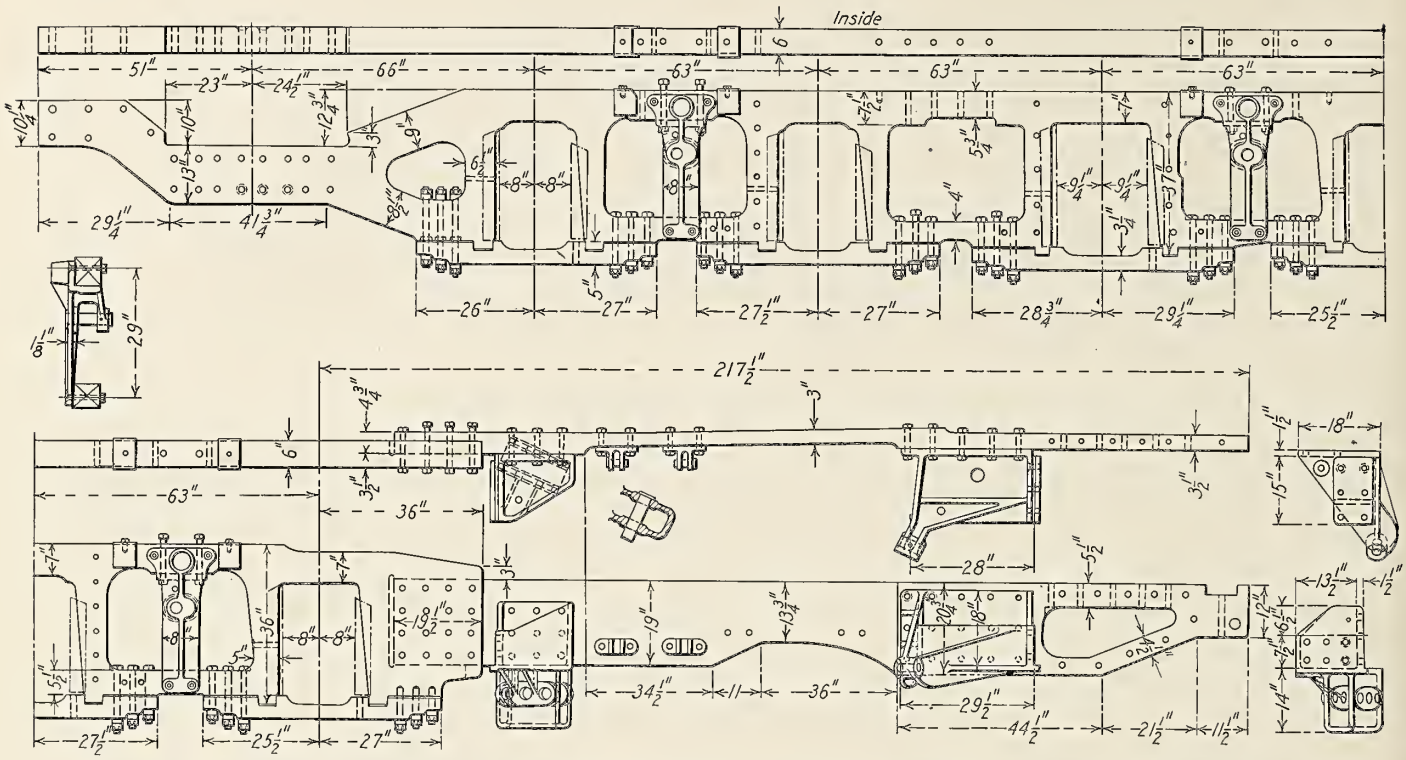

Fig. 512—Cast Steel Frame for Santa Fe Type (2-10-2) Locomotive. Built for the Chicago, Burlington & Quincy by the Baldwin Locomotive Works.

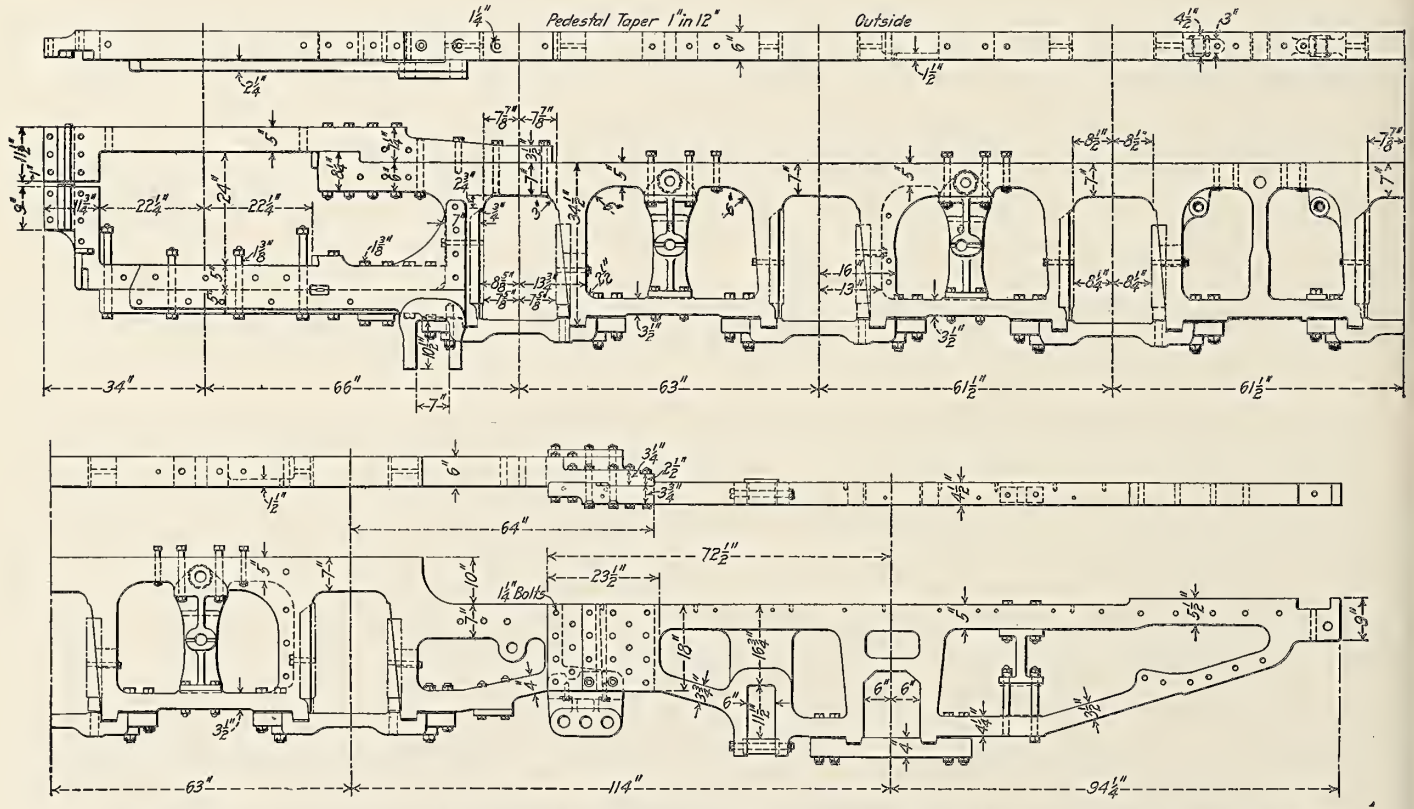

Fig. 513—Cast Steel Frame for Santa Fe Type (2-10-2) Locomotive. Built for the Chicago, Burlington & Quincy by the Baldwin Locomotive Works.

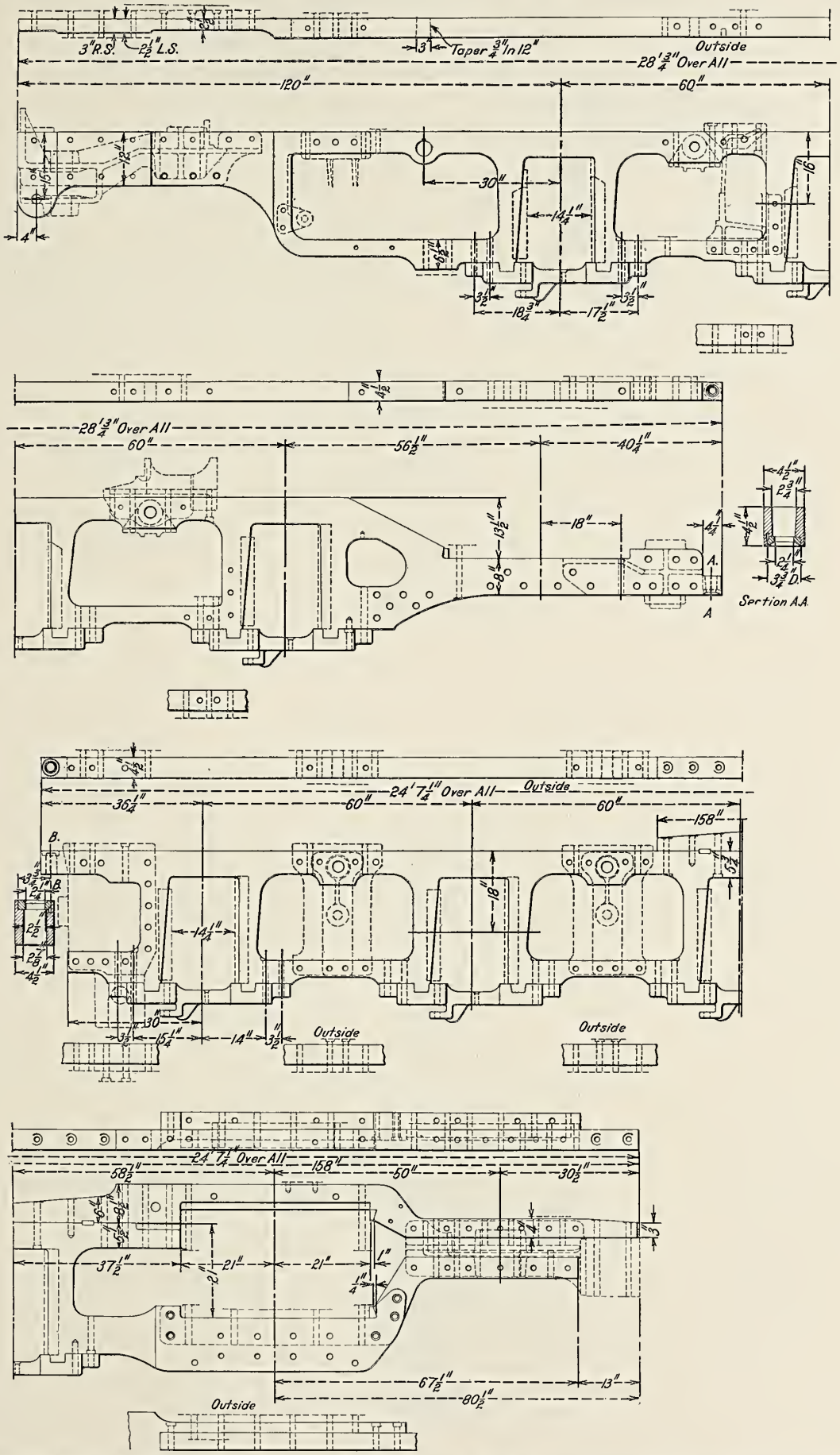

Fig. 514—Cast Steel Frames for Front and Back Units on Mallet Articulated (2-6-6-2) Compound Locomotive. Built for the New York Central & Hudson River by the American Locomotive Company.
(See Figs. 562-573 for Details.)

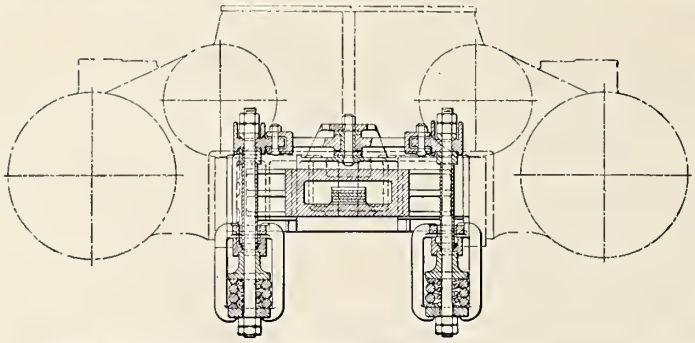

Fig. 515—Section of Articulated Frame Connection Shown in Fig. 517.

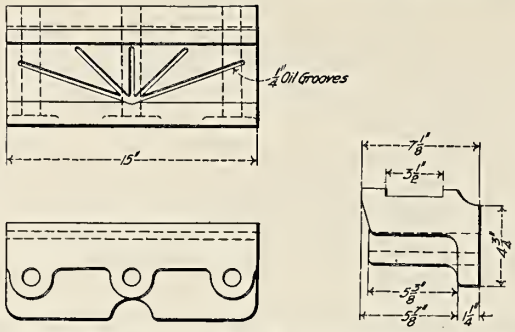

Fig. 516—Expansion Pad for Consolidation (2-8-0) Locomotive; American Locomotive Company.

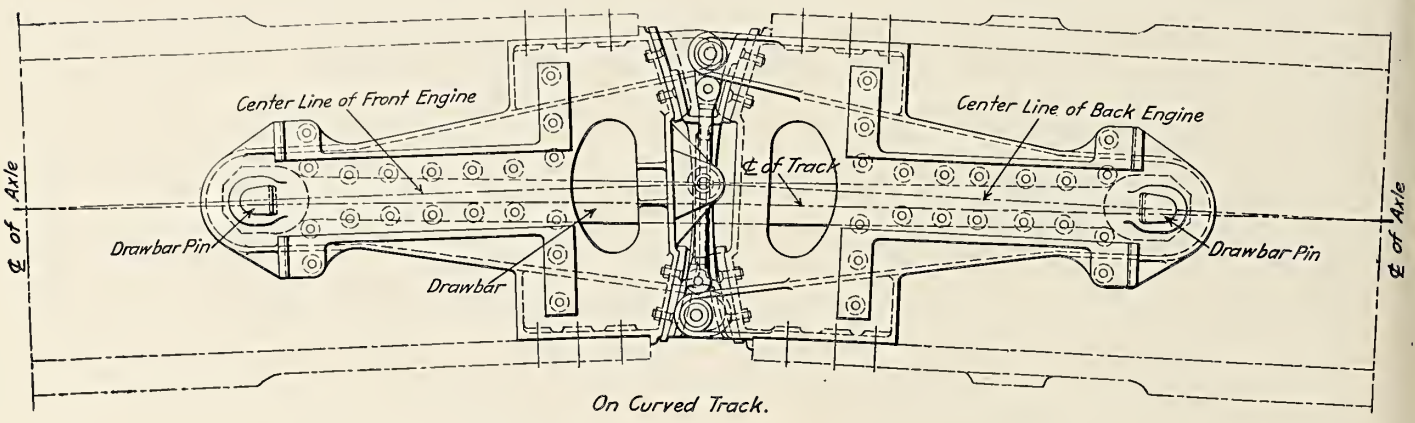

On Curved Track.

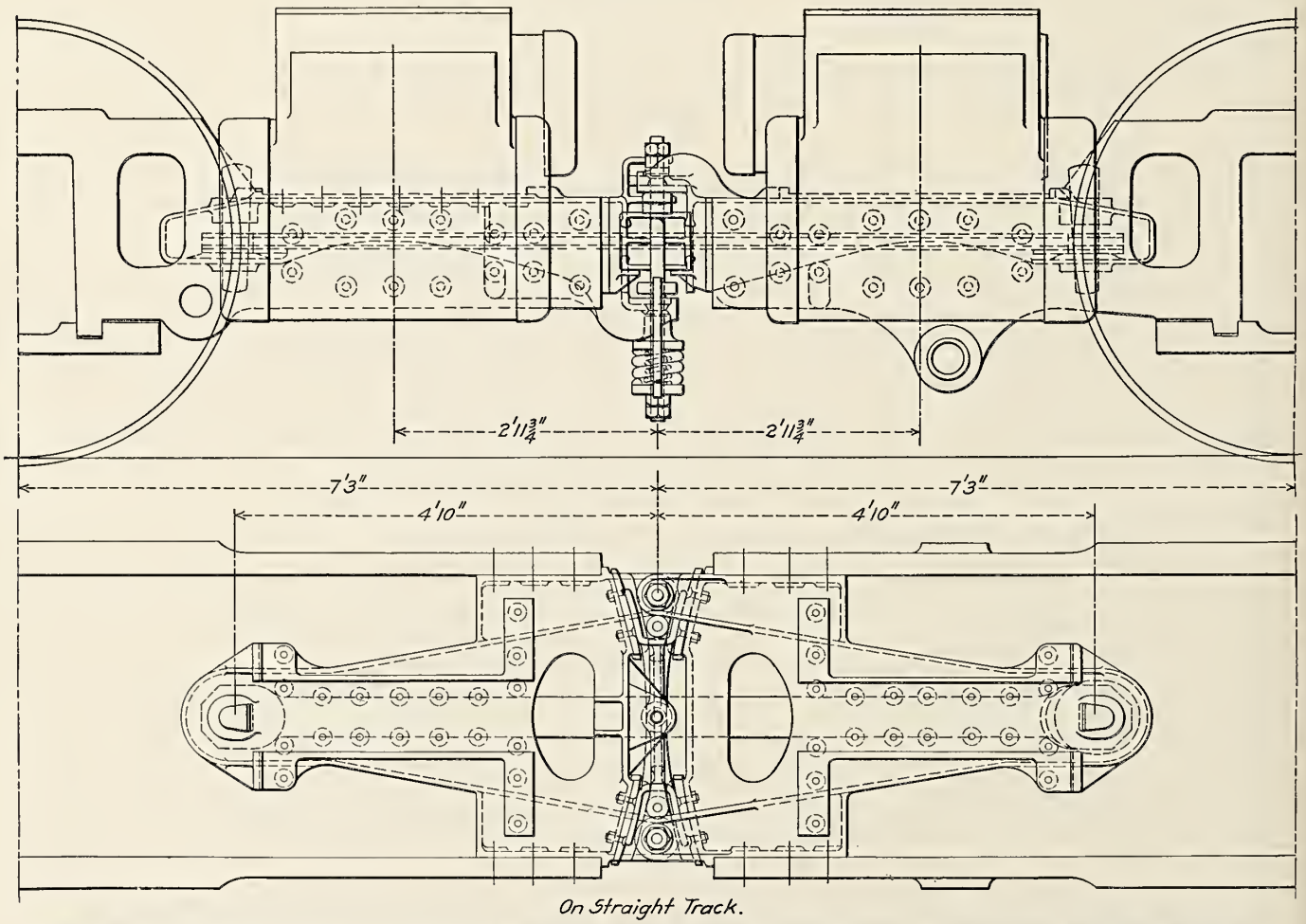

On Straight Track.

Fig. 517—Articulated Frame Connection for Mallet Articulated (0-6-6-0) Simple Locomotive; Canadian Pacific.

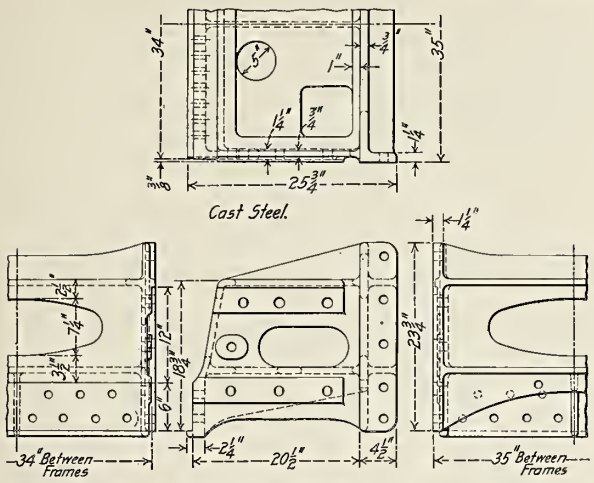

Fig. 518—Cast Steel Expansion Crosstie Back of Fourth Pedestal on Mountain Type (4-8-2) Locomotive. Built for the Chesapeake & Ohio by the American Locomotive Company.

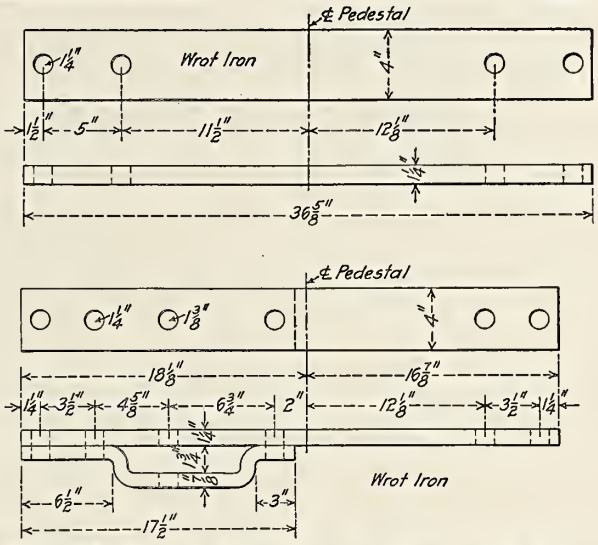

Fig. 519—Frame Pedestal Cap Used with Long Main Driving Box; American Locomotive Company.

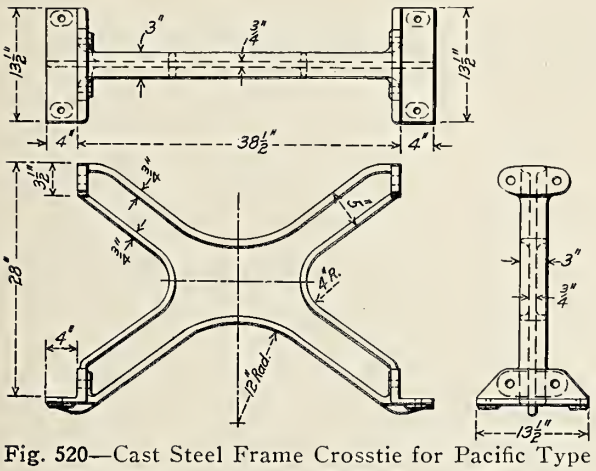

Fig. 520—Cast Steel Frame Crosstie for Pacific Type (4-6-2) Locomotive. Built for the Nashville, Chattanooga & St. Louis by the Baldwin Locomotive Works.

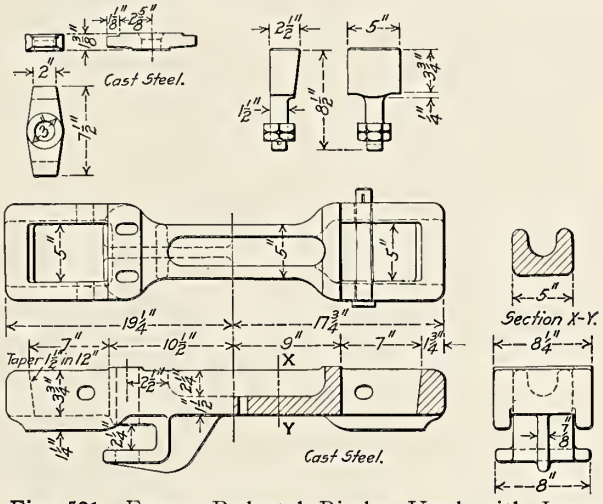

Fig. 521—Frame Pedestal Binder Used with Long Main Driving Box; American Locomotive Company.

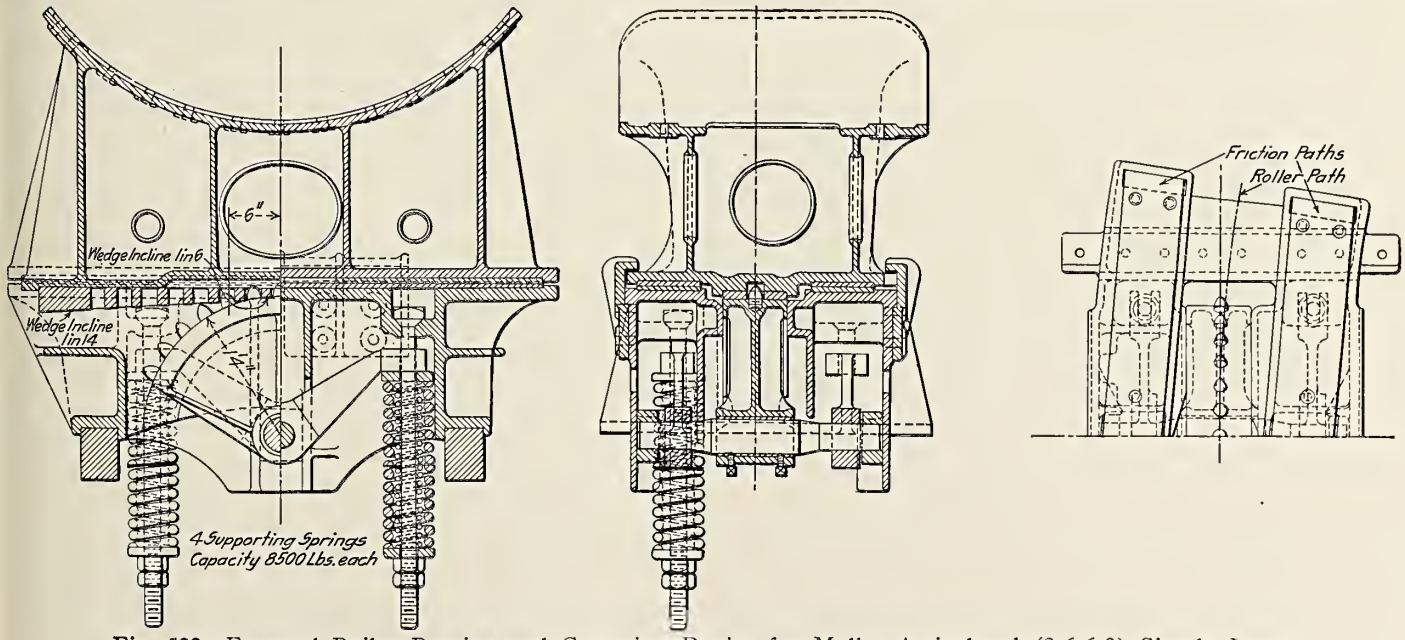

Fig. 522—Forward Boiler Bearing and Centering Device for Mallet Articulated (0-6-6-0) Simple Locomotive; Canadian Pacific.

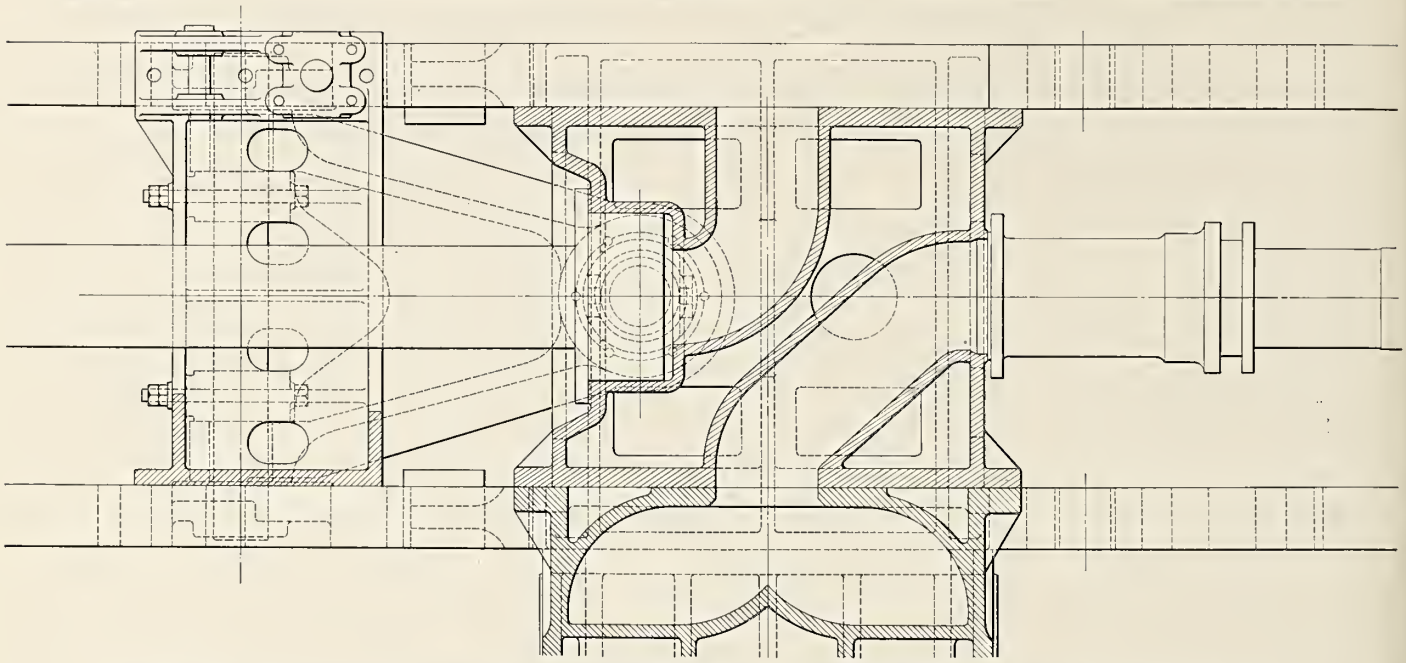

Fig. 523—Plan of General Arrangement of the Connection between Front and Middle Units of Mallet Articulated Triplex (2-8-8-8-2) Locomotive. Built for the Erie by the Baldwin Locomotive Works.

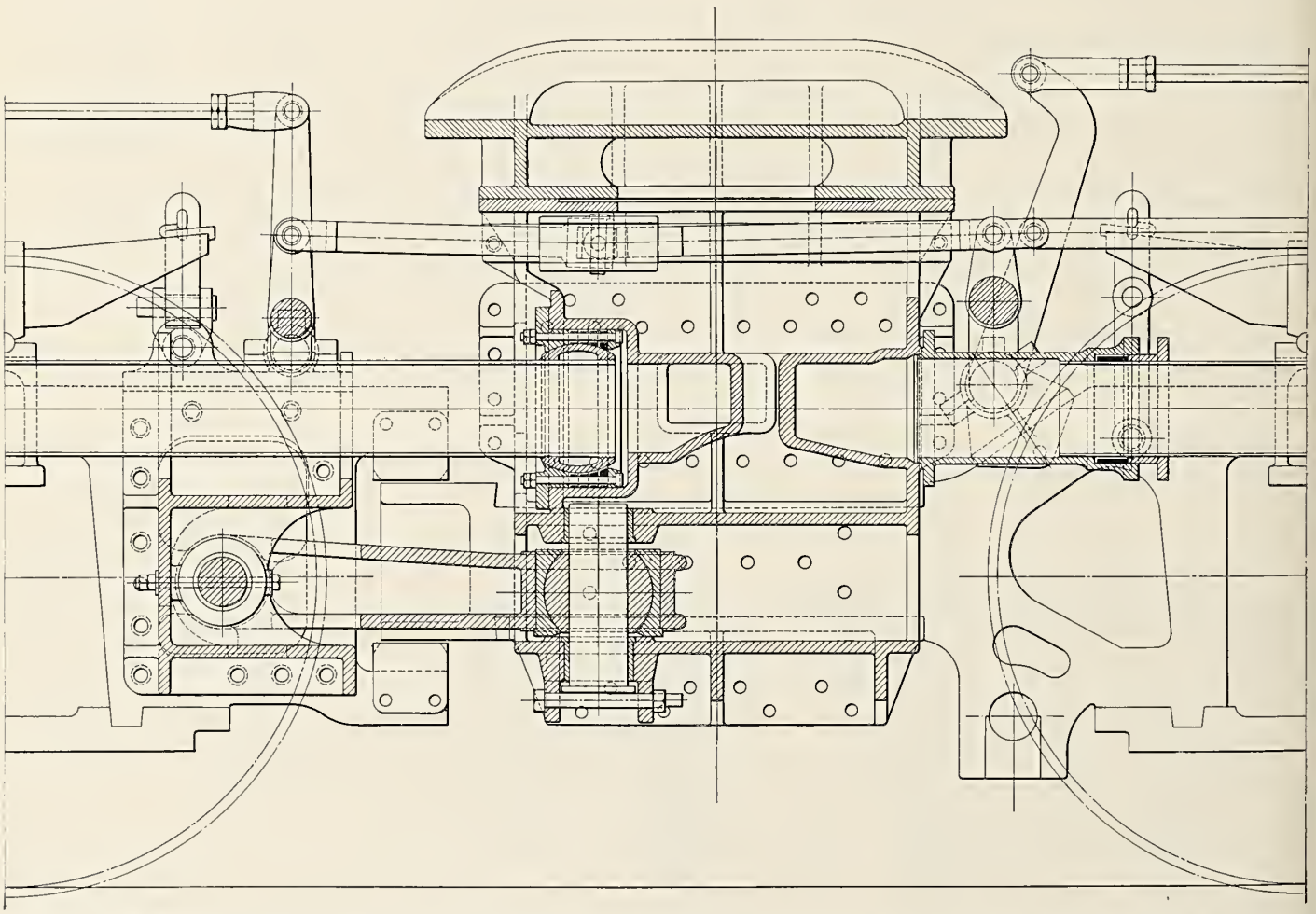

Fig. 524—Elevation of General Arrangement of the Connection between Front and Middle Units of Mallet Articulated Triplex (2-8-8-8-2) Locomotive. Built for the Erie by the Baldwin Locomotive Works.

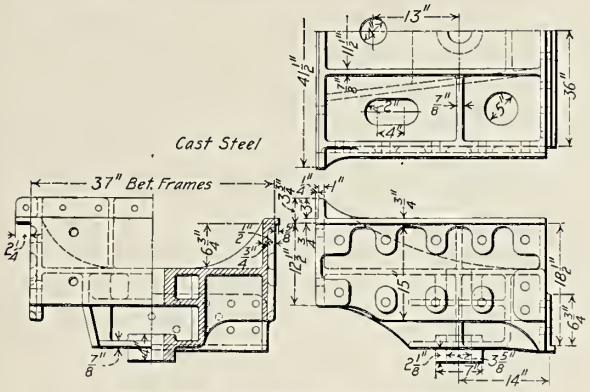

Fig. 525—Cast Steel Foot Plate.

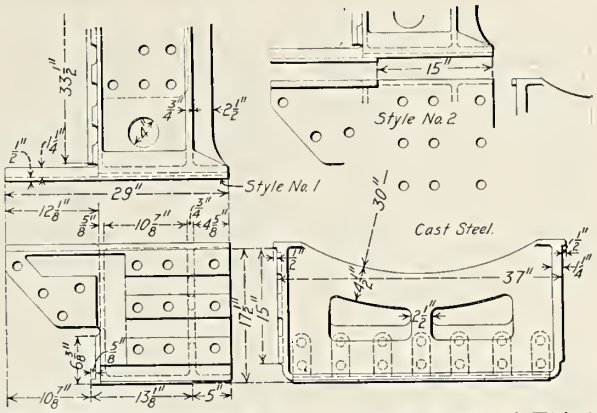

Fig. 526—Cast Steel Frame Crosstie Back of Third Pedestal.

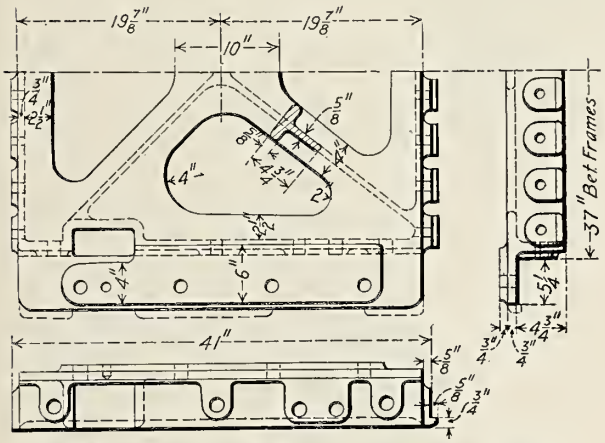

Fig. 527—Cast Steel Frame Crosstie at Top of Frame in Front of Third Pedestal.

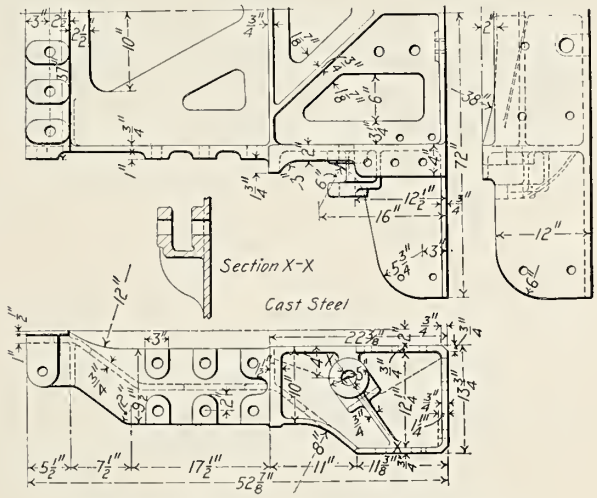

Fig. 528—Cast Steel Bumper Bracket.

Figs. 525-528 are Details of Frame Bracing for Pacific Type (4-6-2) Locomotive No. 50,000. Built for Experimental Purposes by the American Locomotive Company.

(*See Fig.* 510 *for Frame.*)

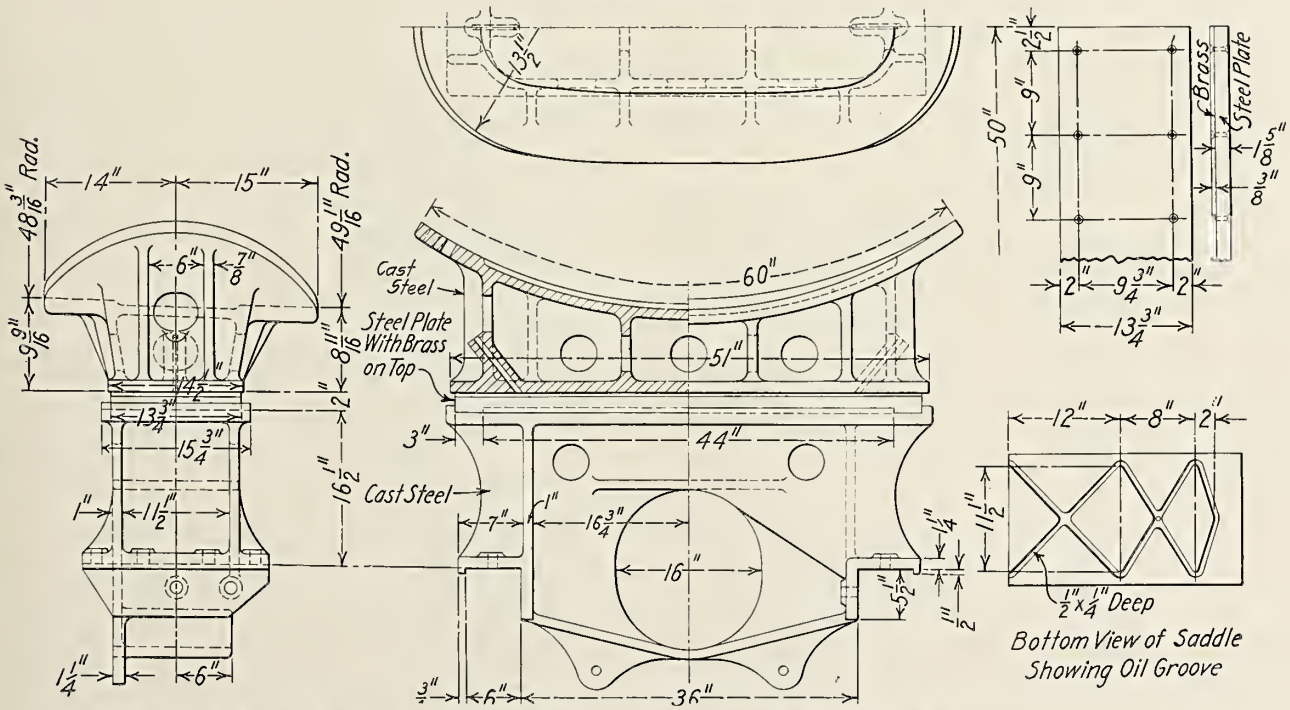

Fig. 529—Back Boiler Bearing and Saddle for Carrying Forward End of Boiler on Front Unit of Mallet Type Locomotive; Baldwin Locomotive Works.

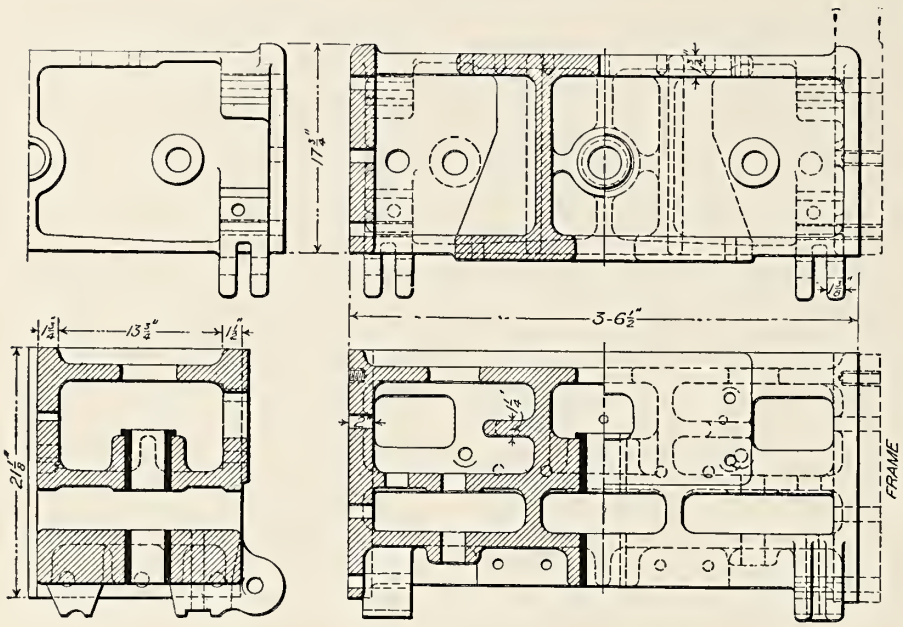

Fig. 530—Cast Steel Foot Plate; Pennsylvania Railroad.

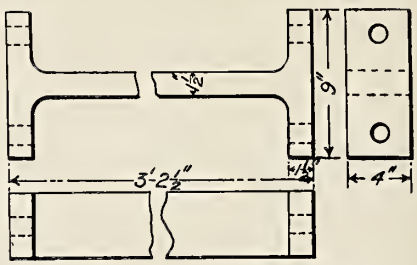

Fig. 531—Lower Frame Brace Ahead of Front Pedestal of Atlantic Type (4-4-2) Locomotive; Pennsylvania Railroad.

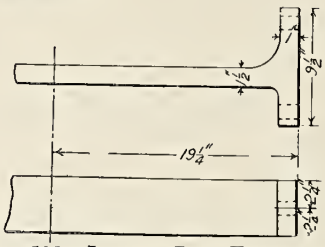

Fig. 532—Lower Bar Frame Brace Back of Front Pedestal of Atlantic Type (4-4-2) Locomotive; Pennsylvania Railroad.

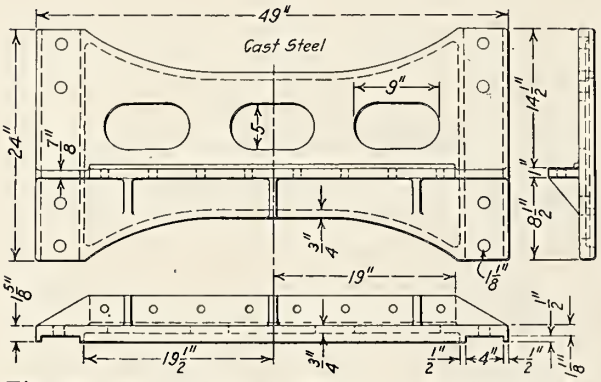

Fig. 533—Frame Crosstie Which Acts as Support for Waist Sheet; Baldwin Locomotive Works.

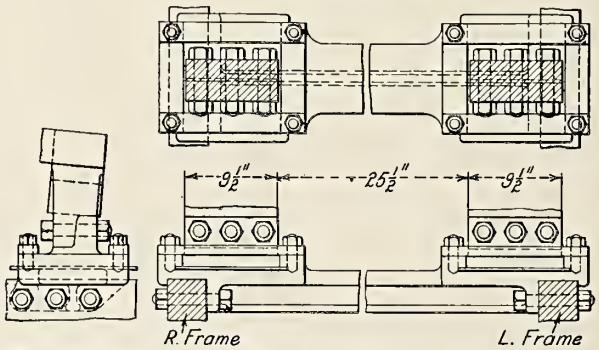

Fig. 534—Expansion Pads and Clamps; Pennsylvania Railroad.

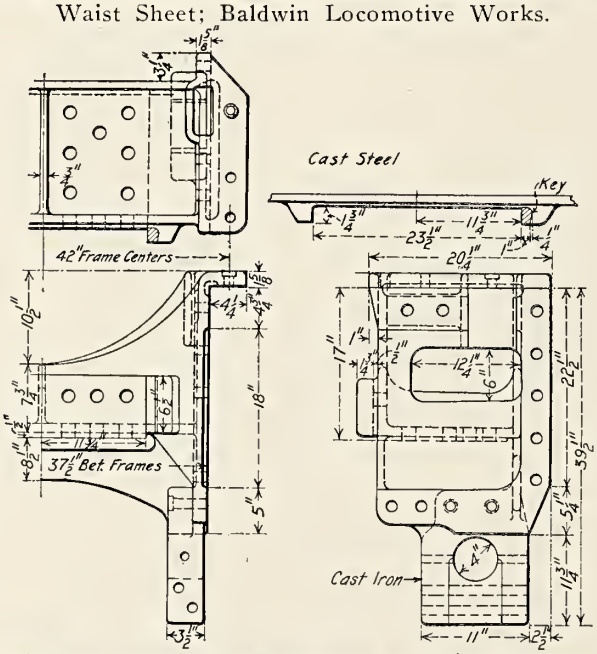

Fig. 535—Frame Crosstie Back of Third Pedestal.

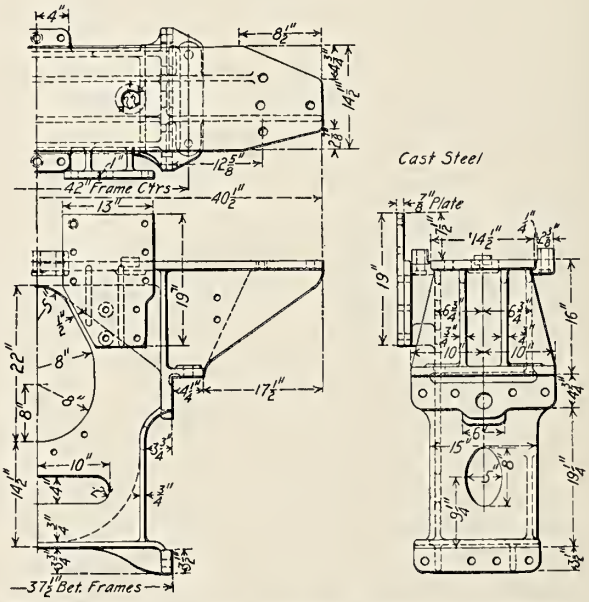

Fig. 536—Frame Crosstie Back of Second Pedestal.

Figs. 535-536 are Details of Frame Bracing for Mallet Articulated (2-6-6-2) Compound Locomotive. Built for the New York Central & Hudson River by the American Locomotive Company.

(*See Fig.* 514 *for Frame.*)

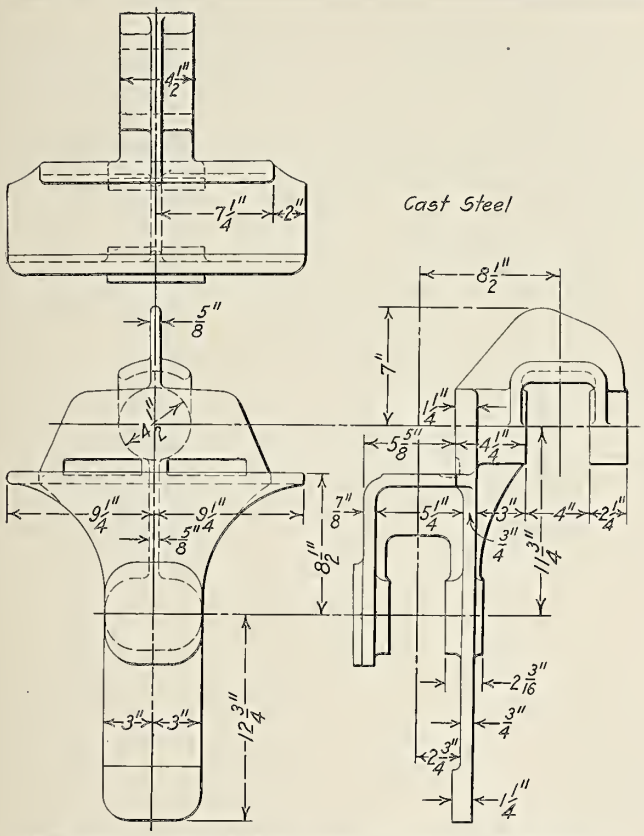

Fig. 537—Frame Filling Piece Used as Equalizing Beam Fulcrum and Brake Hanger Support; Baldwin Locomotive Works.

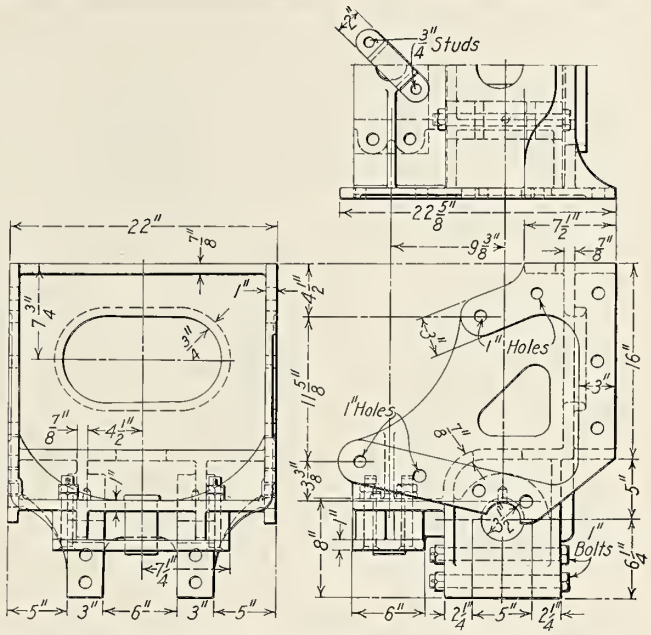

Fig. 538—Combination Pedestal Brace, Brake Shaft Fulcrum and Radius Bar Crosstie; Baldwin Locomotive Works.

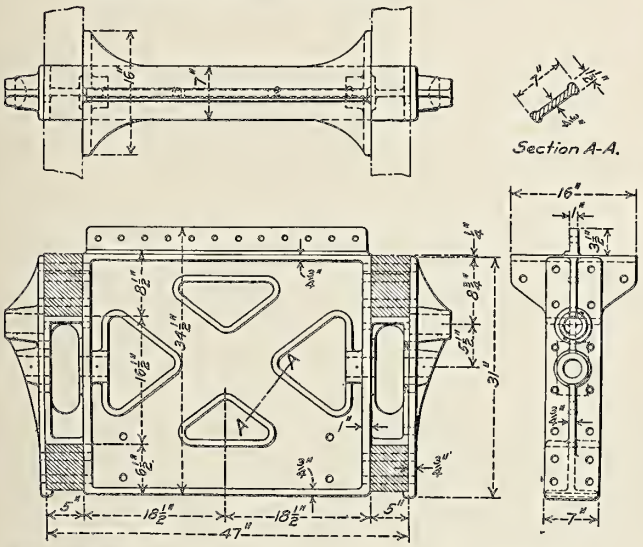

Fig. 539—Frame Brace Between the Third and Fourth Pairs of Drivers for Mikado (2-8-2) Locomotive; Philadelphia & Reading.

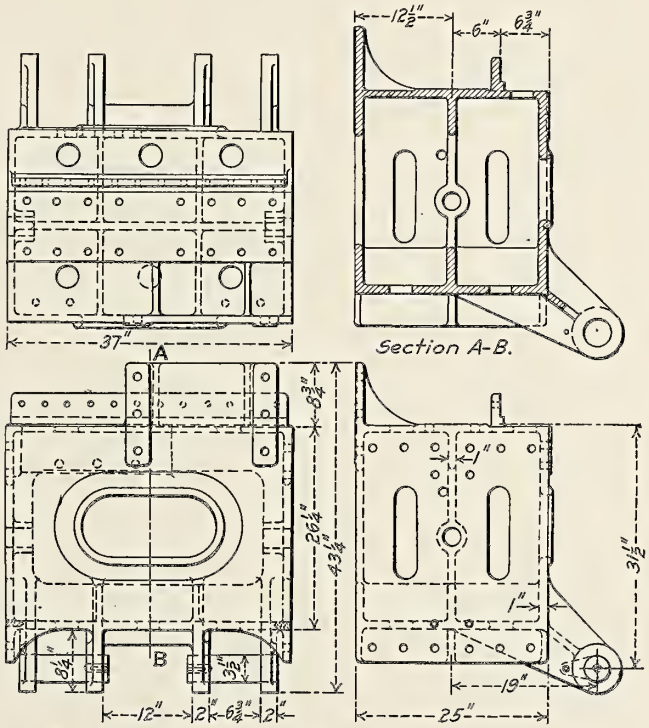

Fig. 540—Frame Brace at the Guide Yoke for Mikado (2-8-2) Locomotive; Philadelphia & Reading.

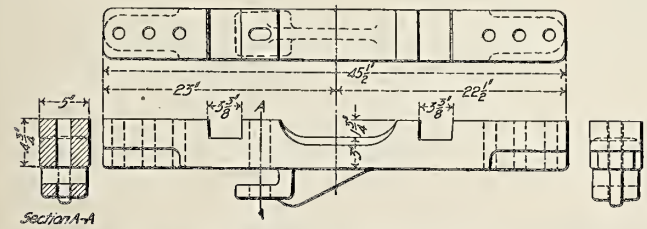

Fig. 541—Frame Pedestal Binder for Consolidation (2-8-0) Locomotive; American Locomotive Company.

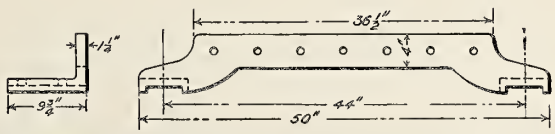

Fig. 542—Frame Crosstie for Consolidation (2-8-0) Locomotive; American Locomotive Company.

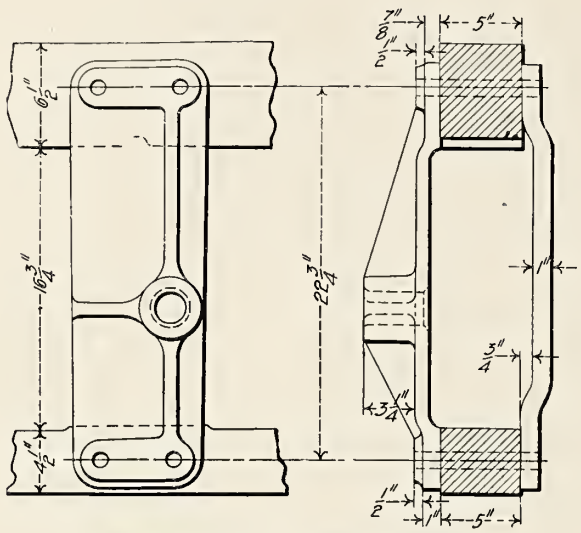

Fig. 543—Frame Filling Piece.

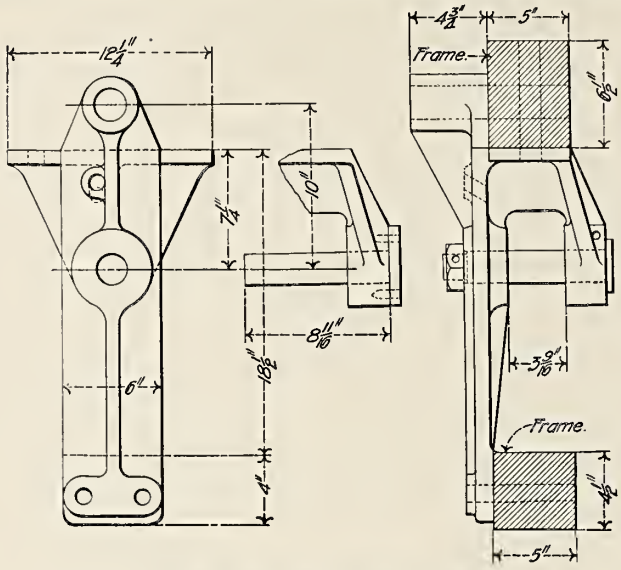

Fig. 544—Frame Filling Piece.

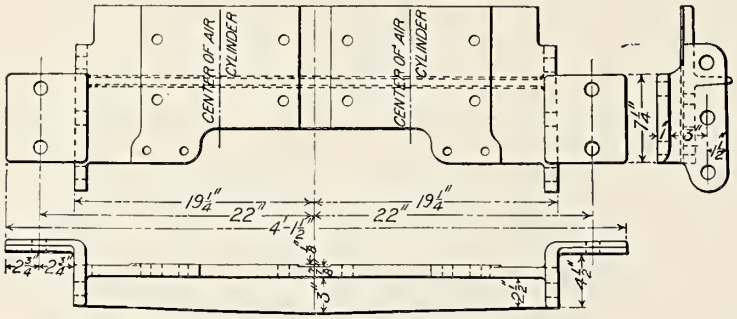

Fig. 545—Brake Cylinder Support and Lateral Frame Brace.

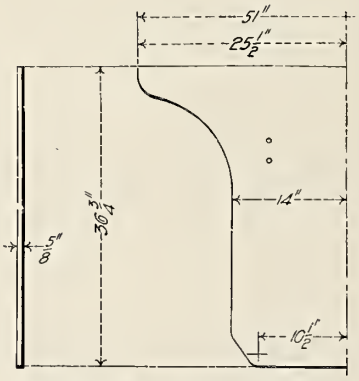

Fig. 546—Expansion Plate.

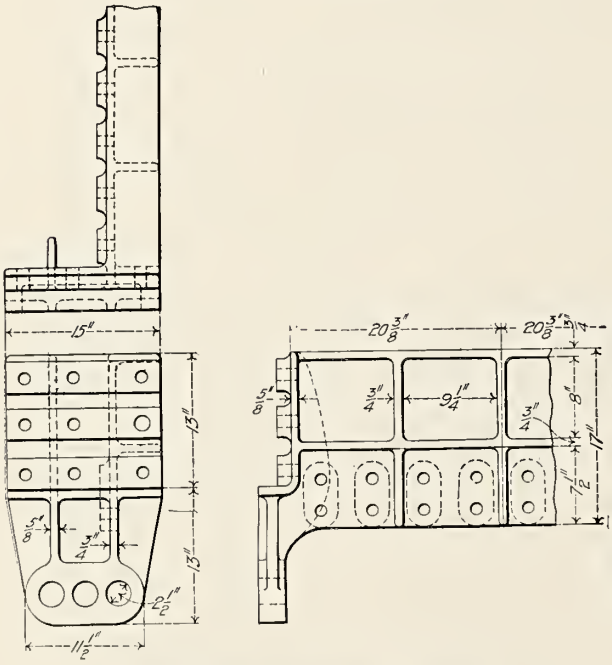

Fig. 547—Expansion Crosstie.

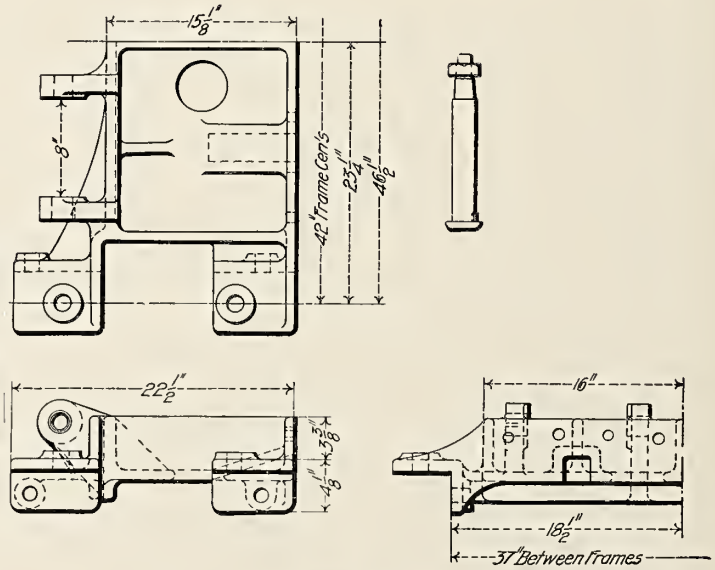

Fig. 548—Frame Crosstie.

Details Above, Figs. 543-548, are of Cast Steel Frame for Consolidation (2-8-0) Locomotive; American Locomotive Company.

(*See Fig.* 505 *for Frame.*)

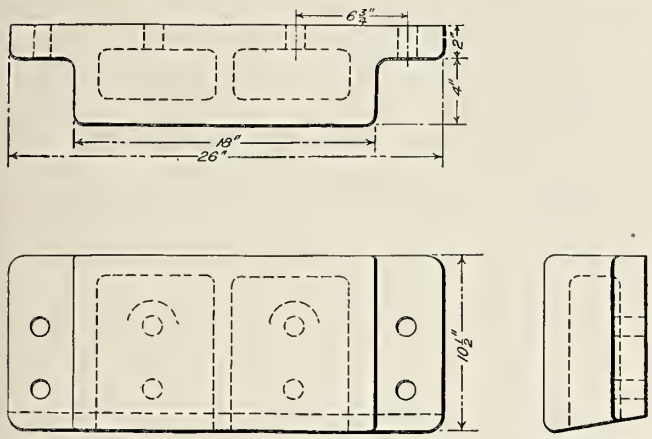

Fig. 549—Chafing Plate for Consolidation (2-8-0) Locomotive; American Locomotive Company.

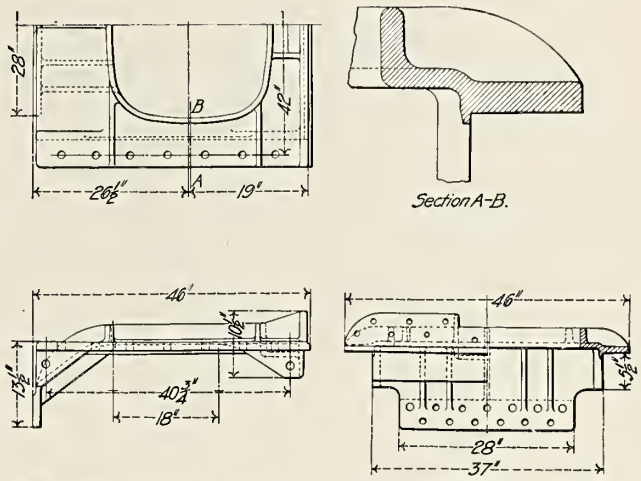

Fig. 550—Frame Crosstie for Consolidation (2-8-0) Locomotive; American Locomotive Company.

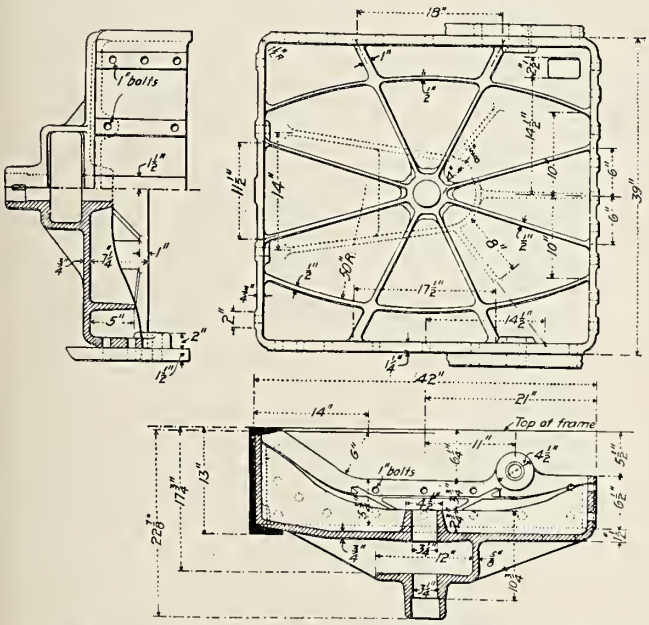

Fig. 551—Cast Steel Foot Plate for Eight-Wheel (4-4-0) Locomotive; Chicago & Alton.

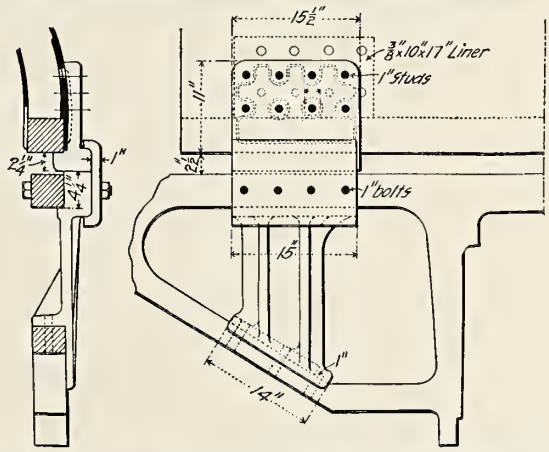

Fig. 552—Rear Expansion Pad for Eight-Wheel (4-4-0) Locomotive.

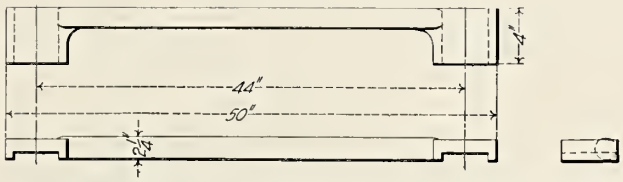

Fig. 553—Frame Crosstie for Consolidation (2-8-0) Locomotive; American Locomotive Company.

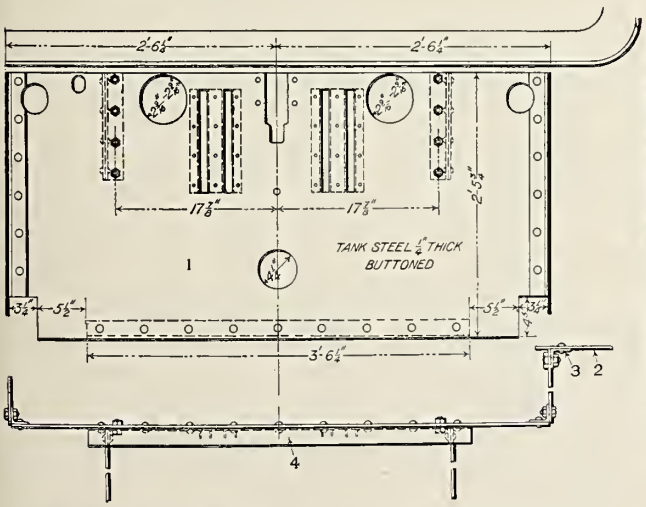

Fig. 554—Deck Plate for Atlantic Type (4-4-2) Locomotive; Pennsylvania Railroad.

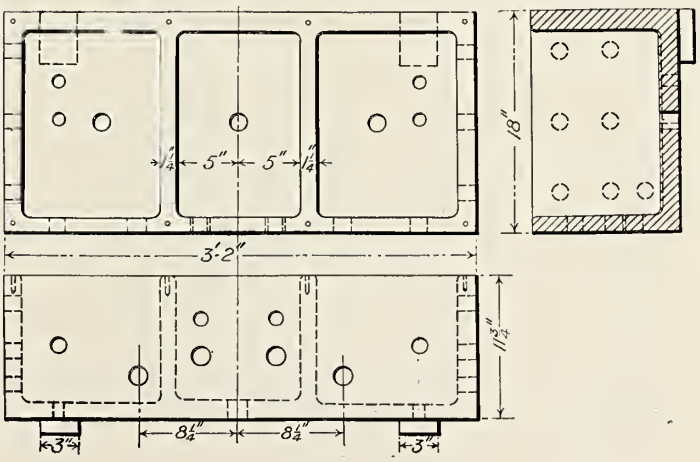

Fig. 555—Front Frame Casting for Atlantic Type (4-4-2) Locomotive; Pennsylvania Railroad.

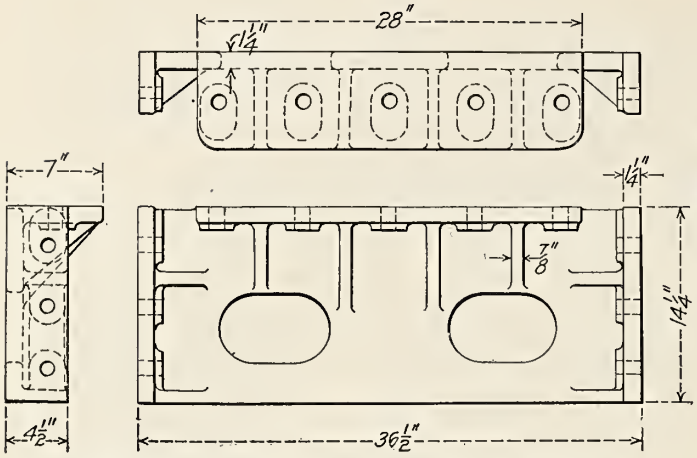

Fig. 556—Cast Steel Frame Crosstie at Splice of Main and Trailing Truck Frames for Pacific Type (4-6-2) Balanced Compound Locomotive.

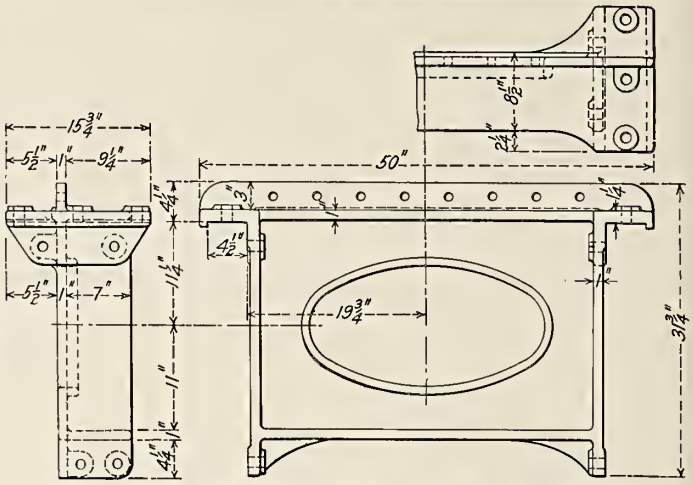

Fig. 557—Cast Steel Frame Crosstie in Front of Third Pedestal for Pacific Type (4-6-2) Balanced Compound Locomotive.

Built for the Atchison, Topeka & Santa Fe by the Baldwin Locomotive Works.

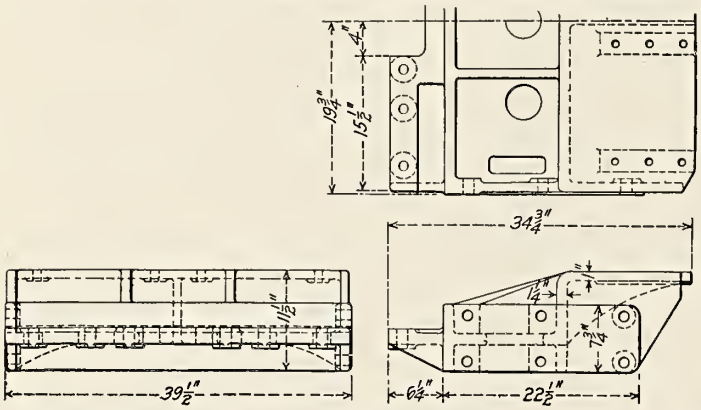

Fig. 558—Cast Steel Frame Crosstie Back of Cylinder for Pacific Type (4-6-2) Balanced Compound Locomotive. Built for the Atchison, Topeka & Santa Fe by the Baldwin Locomotive Works.

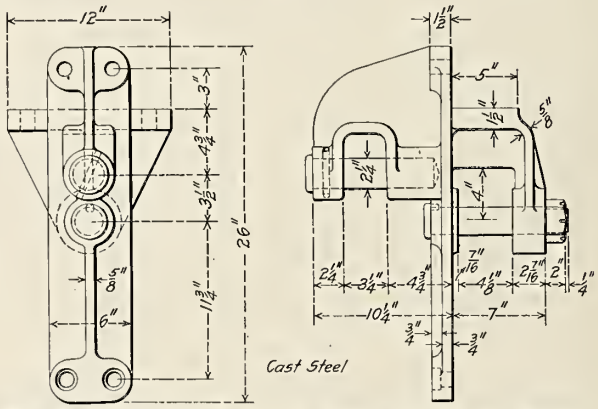

Fig. 559—Cast Steel Frame Filling Piece for Pacific Type (4-6-2) Locomotive. Built for the New York Central & Hudson River by the American Locomotive Company.

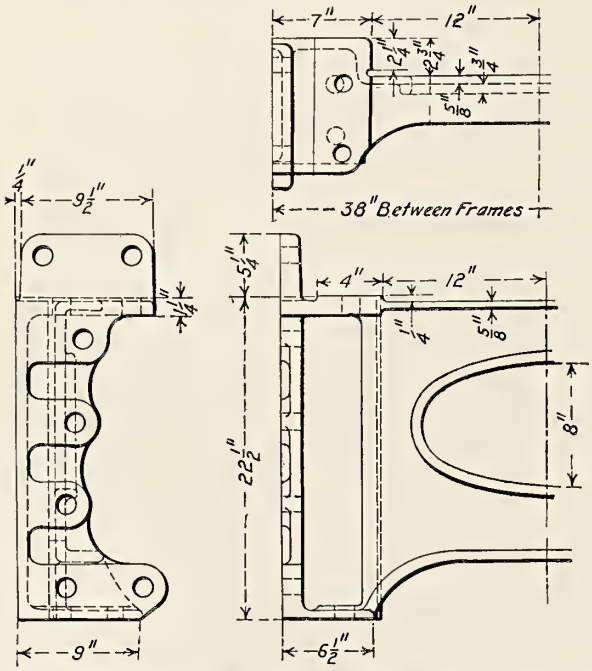

Fig. 560—Cast Steel Frame Crosstie in Front of Main Pedestal for Long Driving Box.

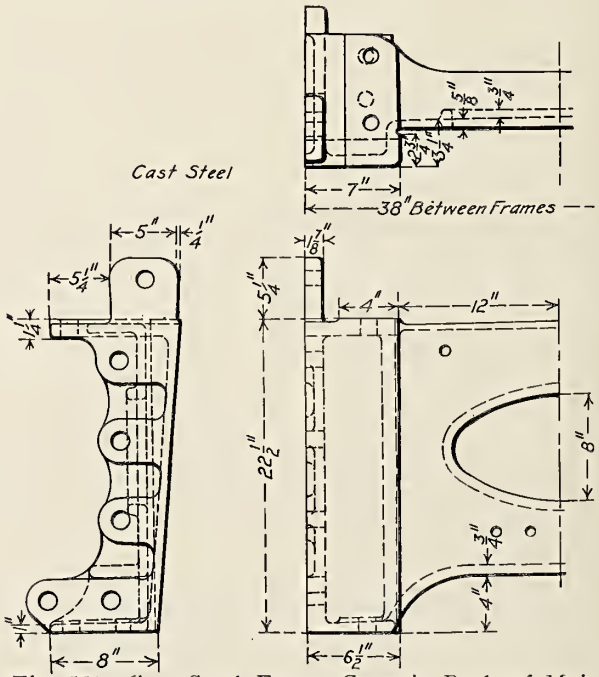

Fig. 561—Cast Steel Frame Crosstie Back of Main Pedestal for Long Driving Box.

Details of Frame Bracing for Pacific Type (4-6-2) Locomotive. Built for the New York Central & Hudson River by the American Locomotive Company.

(*See Fig.* 508 *for Frame.*)

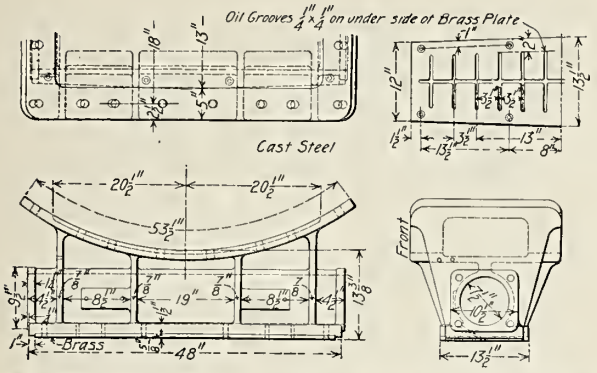

Fig. 562—Main Boiler Bearing Saddle and Centering Device.

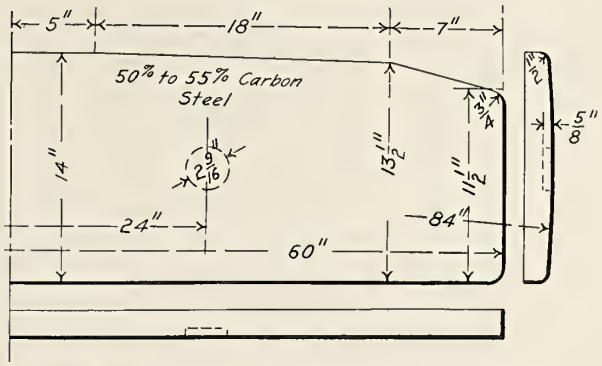

Fig. 563—Boiler Bearing Plate, Lower Half.

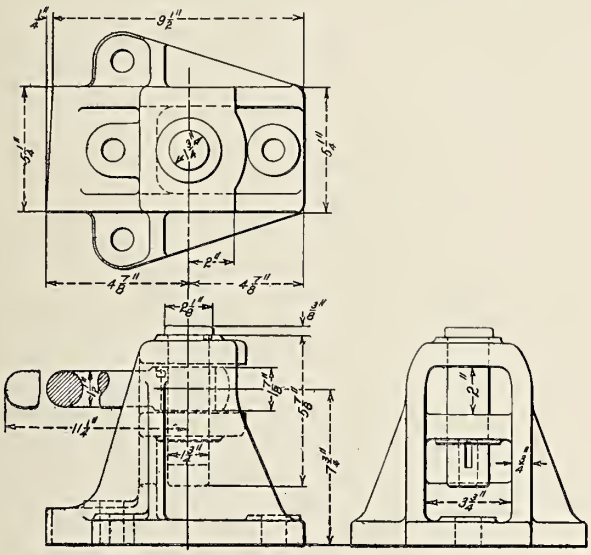

Fig. 564—Boiler Centering Device Bracket.

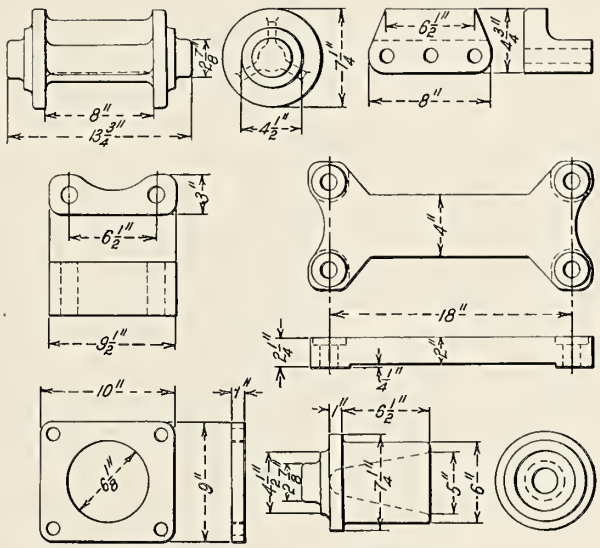

Fig. 565—Boiler Centering Device Details.

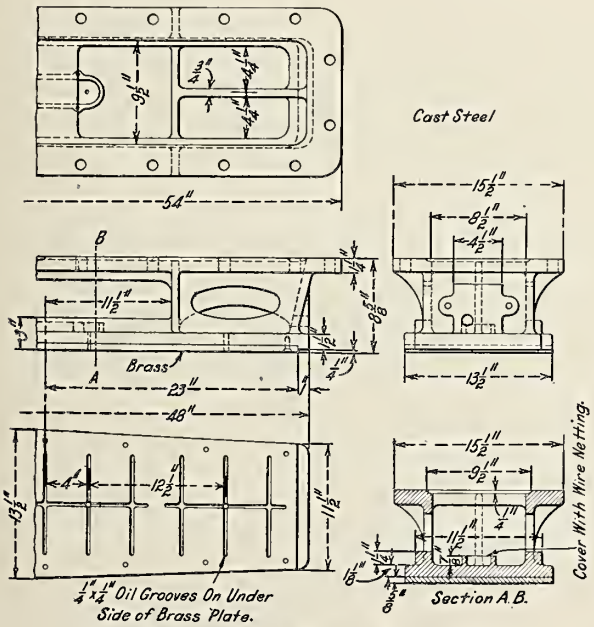

Fig. 566—Front Boiler Bearing.

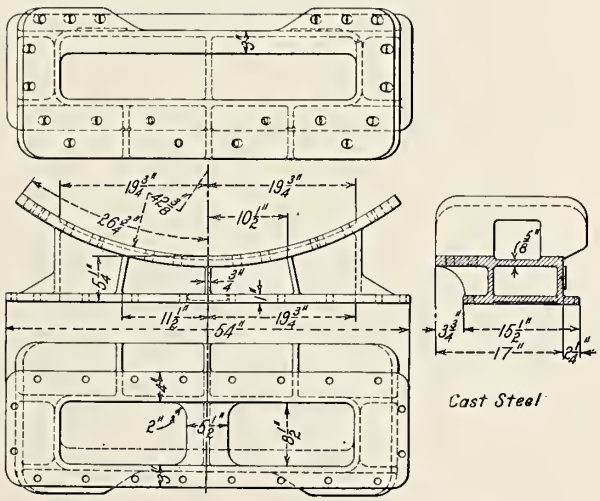

Fig. 567—Front Boiler Bearing Saddle.

Figs. 562-567 are Details of Frame Braces and Boiler Centering Device for Mallet Articulated (2-6-6-2) Compound Locomotive. Built for the New York Central & Hudson River by the American Locomotive Company.

(*See Fig.* 514 *for Frame.*)

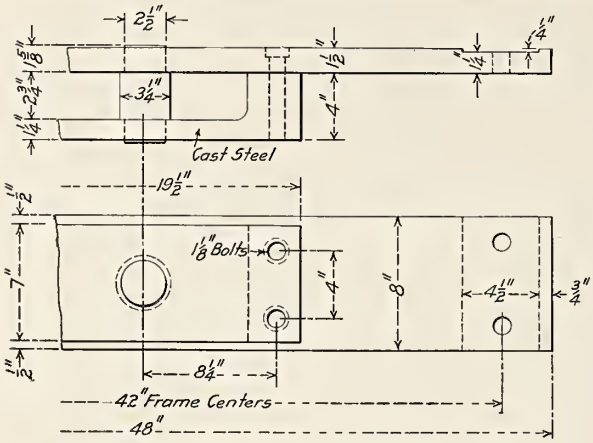

Fig. 568—Trailing Truck Radius Bar Crosstie.

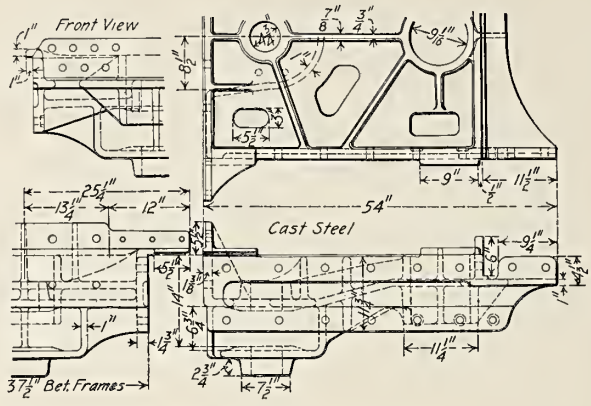

Fig. 569—Cast Steel Foot Plate.

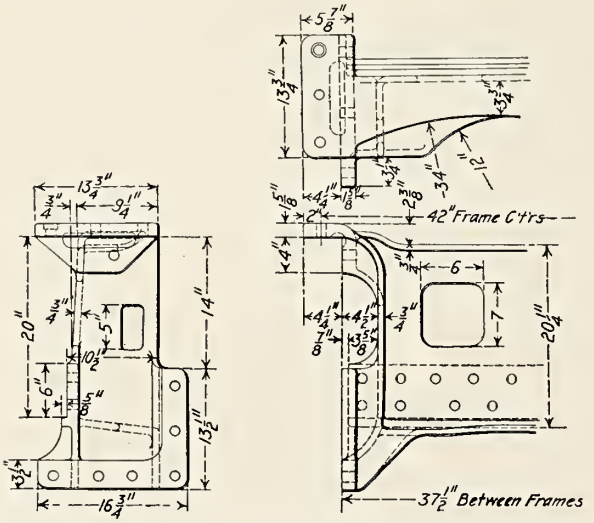

Fig. 570—Cast Steel Frame Crosstie Back of Fifth Pedestal.

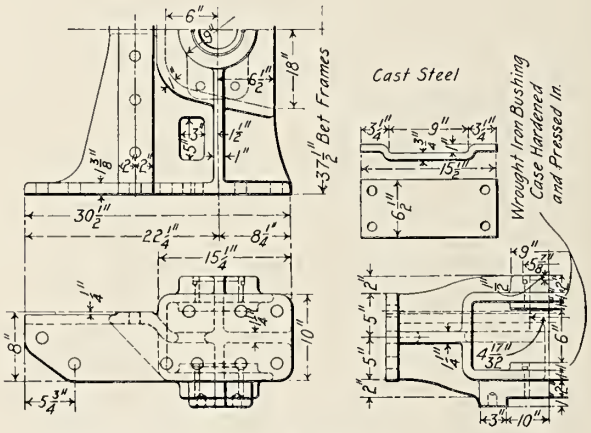

Fig. 571—Cast Steel Bottom Draw Casting.

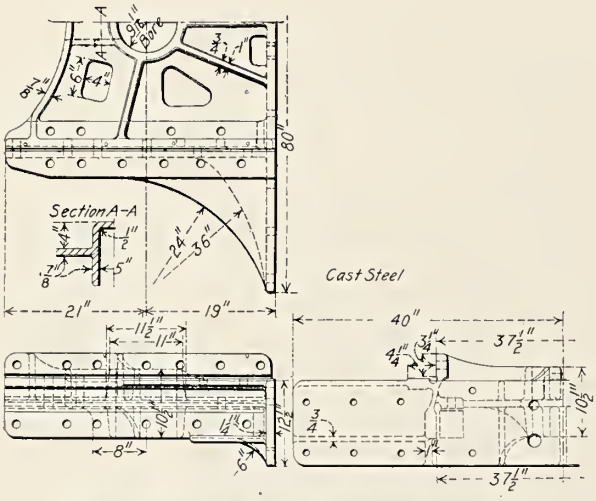

Fig. 572—Cast Steel Bumper Bracket.

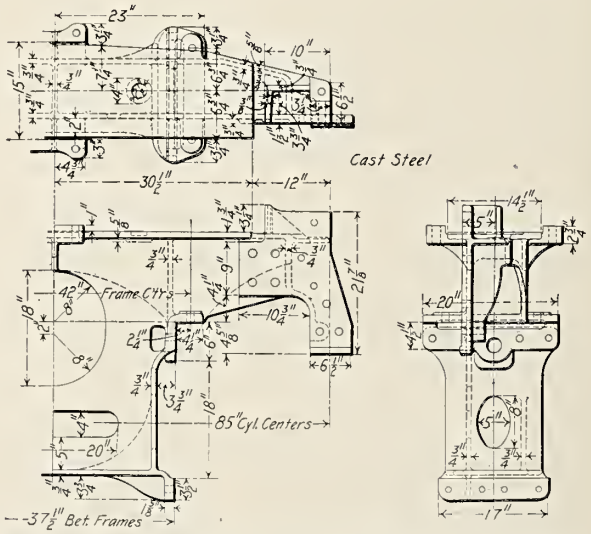

Fig. 573—Cast Steel Frame Crosstie Back of First Pedestal.

Figs. 568-573 are Details of Frame Bracing for Mallet Articulated (2-6-6-2) Compound Locomotive. Built for the New York Central & Hudson River by the American Locomotive Company.

(*See Fig.* 514 *for Frame.*)

Names of Parts of Cylinders, Figs. 579-605 and 634-640.

1 *Guide Block*
2 *Packing Stuffing Box*
8 *Cylinder Cock Valve*
9 *Cylinder Cock Stem*
10 *Cylinder Cock Body*
12 *Cylinder*
12*B* *Cylinder, Low Pressure*
12*C* *Cylinder, High Pressure*
12*D* *Cylinder Head Stud Hole*
13 *Cylinder Saddle*
14 *Frame*
14*C* *Frame Seat*
15 *Cylinder Cock Lever*
16 *Cylinder Cock Lever Shaft*
17 *Cylinder Cock Reach Rod*
18 *Cylinder Cock Reach Rod Bracket*
19 *Cylinder Cock Slide Rod*
20 *Cylinder Cock Operating Lever*
21 *Cylinder Cock Lever Shaft Bearing*
22 *Cylinder Cock Operating Lever Shaft*
23 *Cylinder Cock Reach Rod Carrier*
23*A* *Cylinder Cock Hole*
31 *Steam Chest or Valve Chamber*
31*A* *Steam Chest Seat or Bearing*
31*C* *Steam Chest Bushing*
31*D* *Steam Chest Stud Hole*
32 *Live Steam Passage*
33 *Exhaust Steam Passage*
34 *Valve Seat*
35 *Steam Port*
36 *Exhaust Port*
37 *Bridge*
38 *Center Plate*
39 *Smokebox Seat*
40 *By-pass Valve Case*
41 *Steam Passage Drain*
42 *Receiver Pipe Connection*
43 *High Pressure Exhaust Steam Pipe Connection*
44 *Intercepting Valve Chamber*
45 *High Pressure Exhaust Pipe Connection for Right Hand Cylinder*
46 *Emergency Exhaust Valve Head Connection*
47 *Intercepting Valve Head Connection*

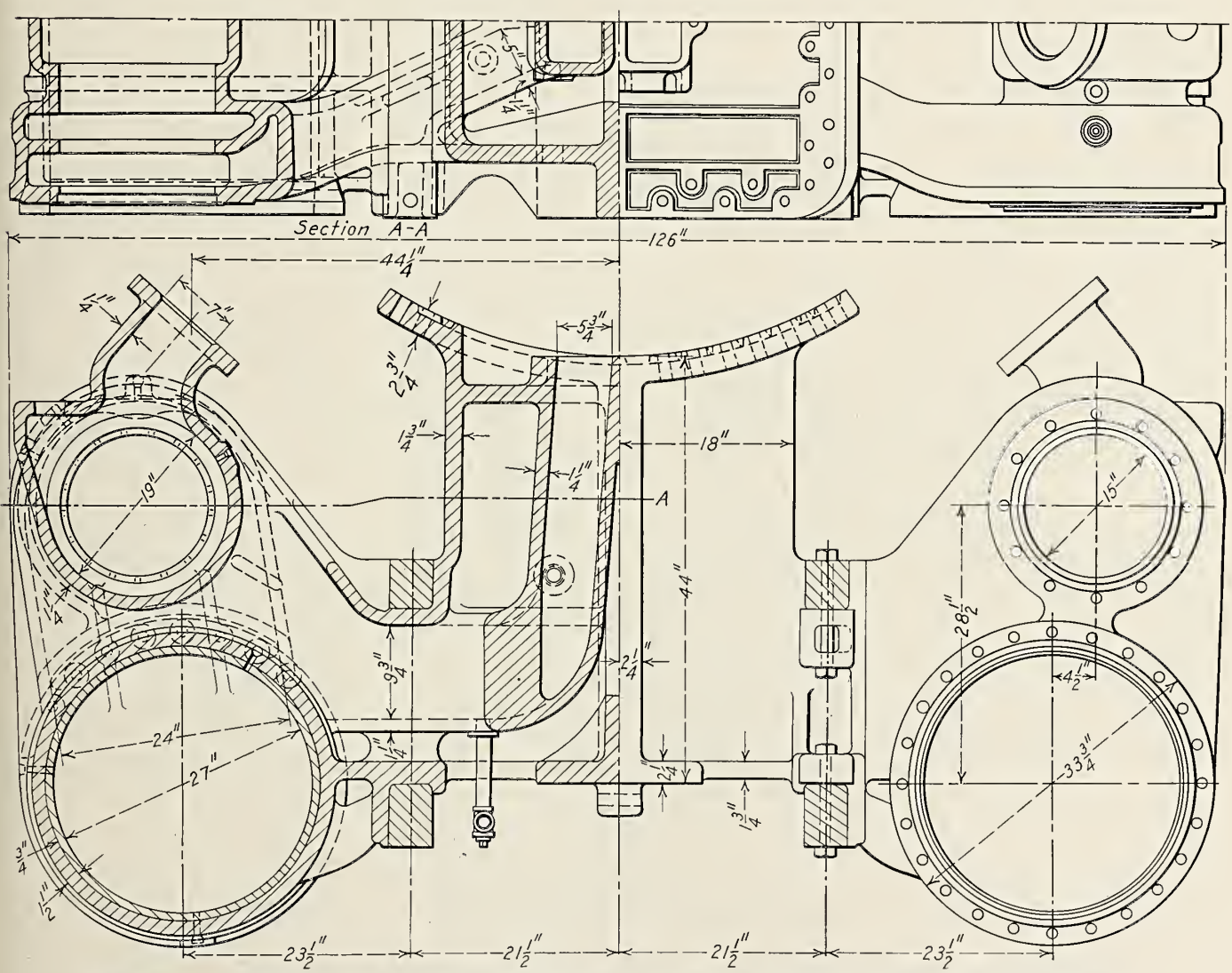

Fig. 574—Simple 27 in. x 30 in. Cylinders with Piston Valves and Outside Steam Pipes for Mikado (2-8-2) Locomotive. Built for the Illinois Central by the Baldwin Locomotive Works.

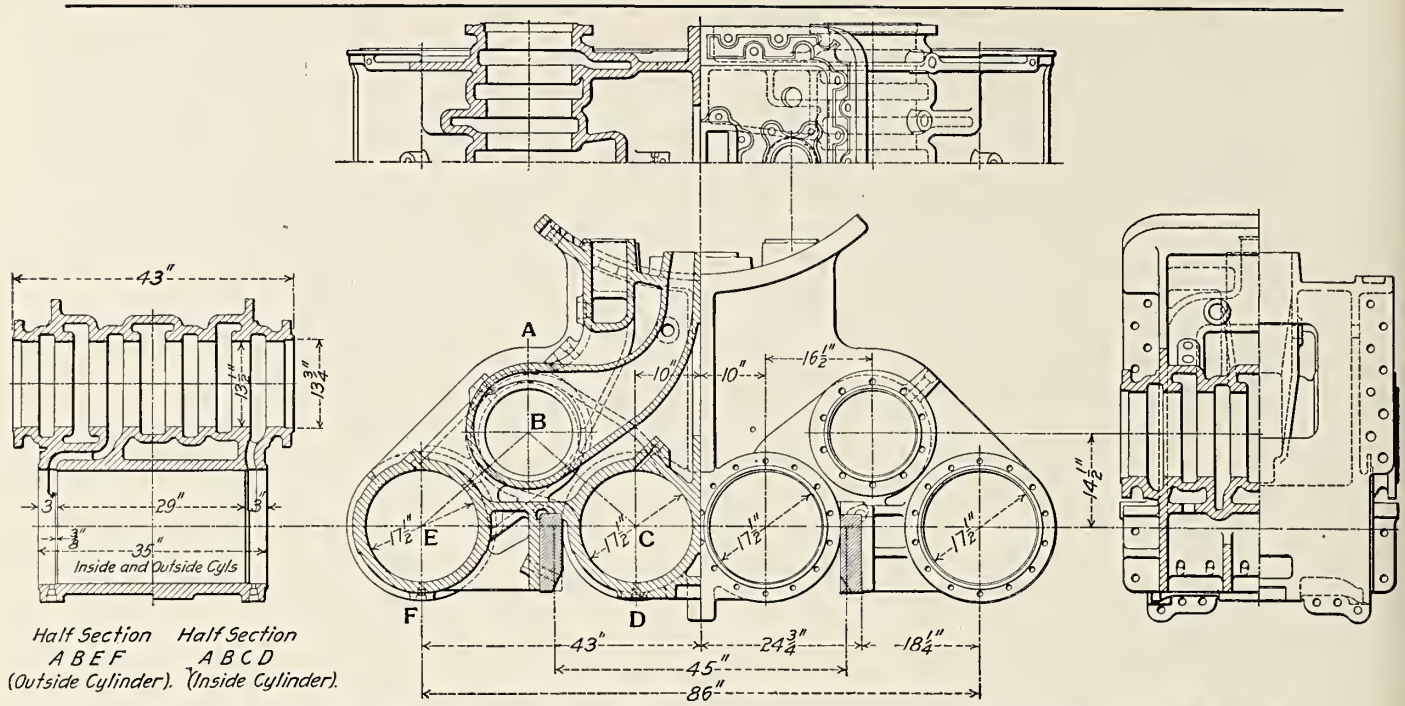

Fig. 575—Cylinders for Atlantic Type (4-4-2) Balanced Simple Locomotive, 17½ in. and 17½ in. x 26 in. Built for the Chicago, Rock Island & Pacific by the American Locomotive Company.

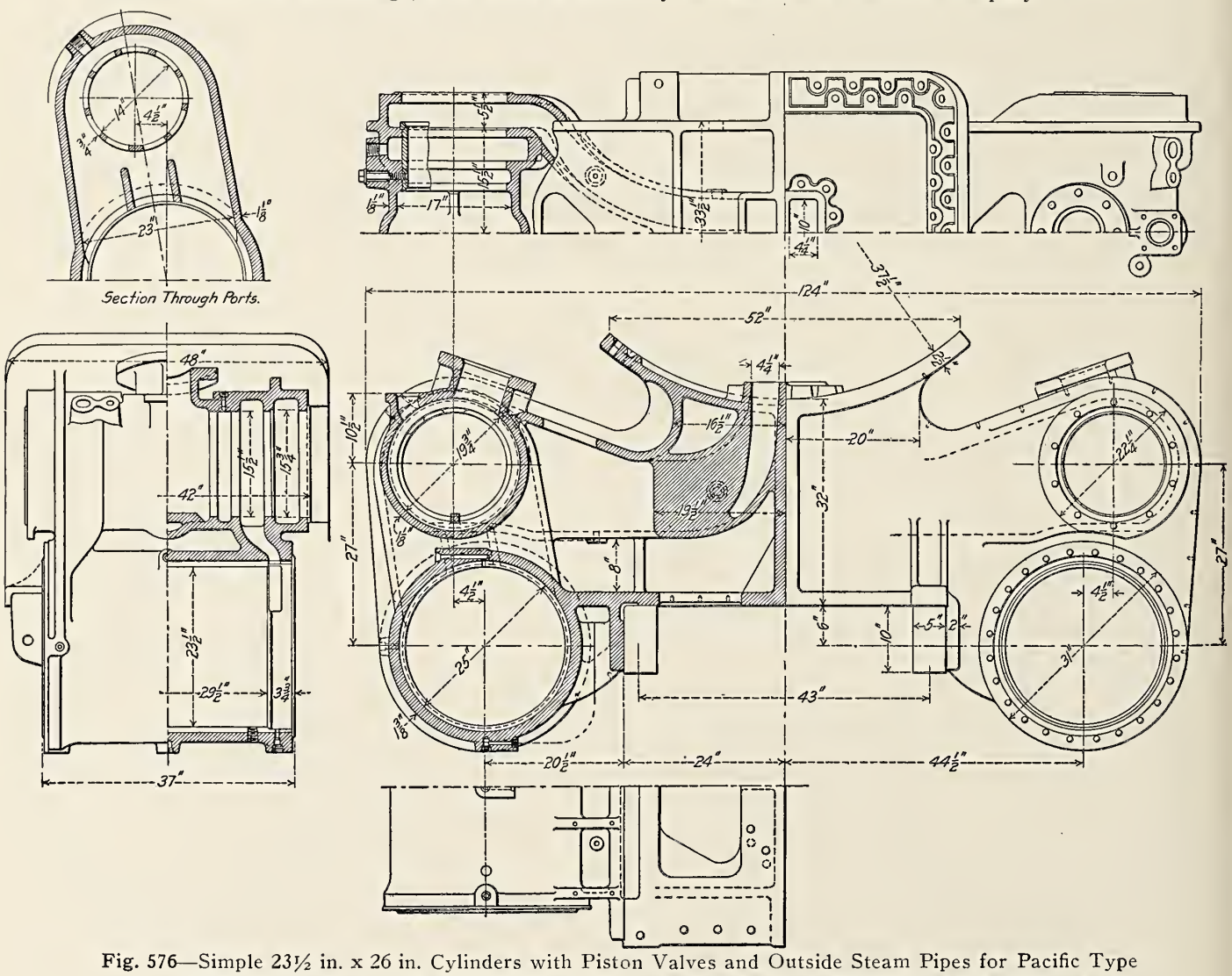

Fig. 576—Simple 23½ in. x 26 in. Cylinders with Piston Valves and Outside Steam Pipes for Pacific Type (4-6-2) Locomotive. Built for the New York Central & Hudson River by the American Locomotive Company.

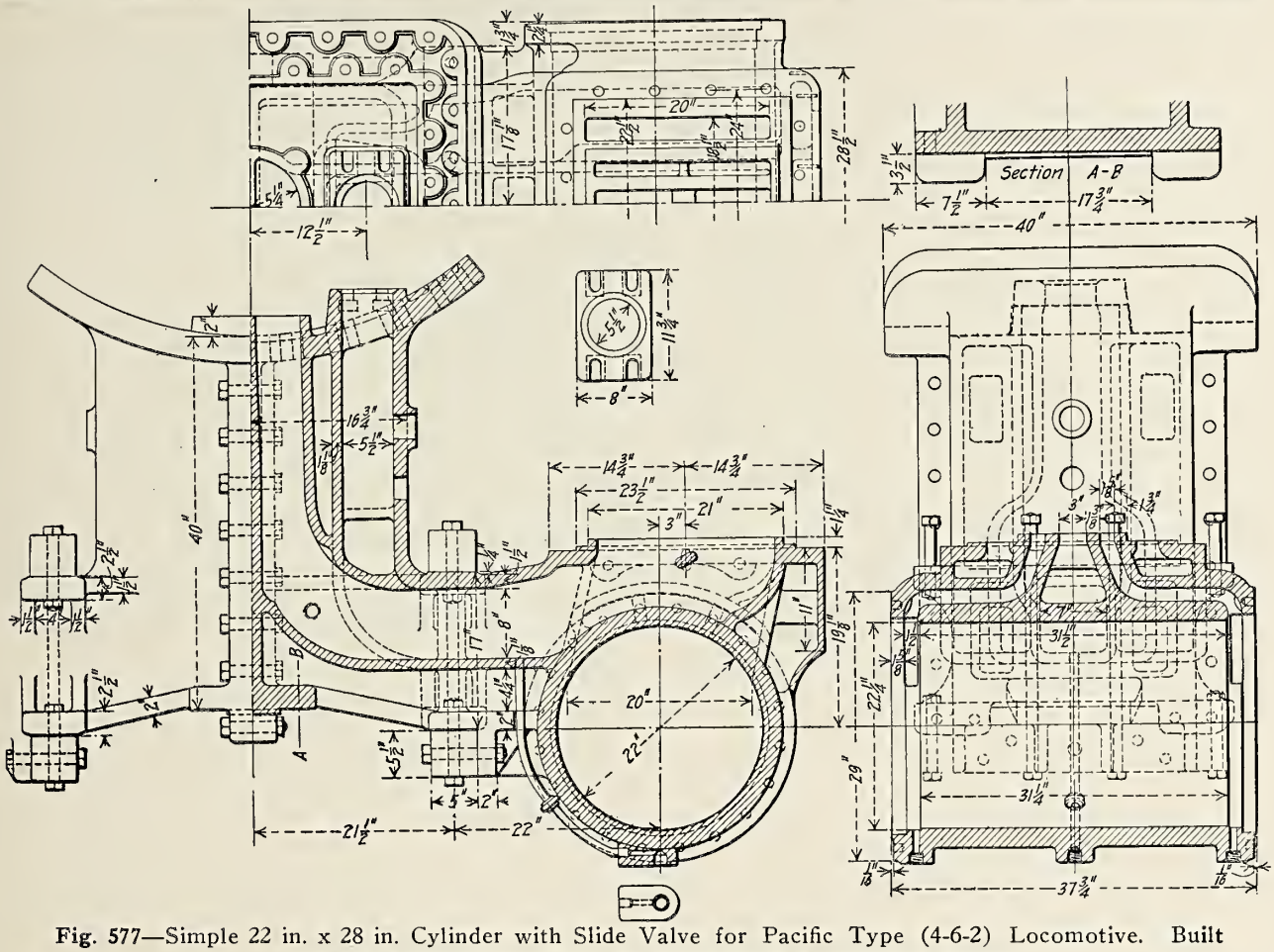

Fig. 577—Simple 22 in. x 28 in. Cylinder with Slide Valve for Pacific Type (4-6-2) Locomotive. Built for the Atlantic Coast Line by the Baldwin Locomotive Works.

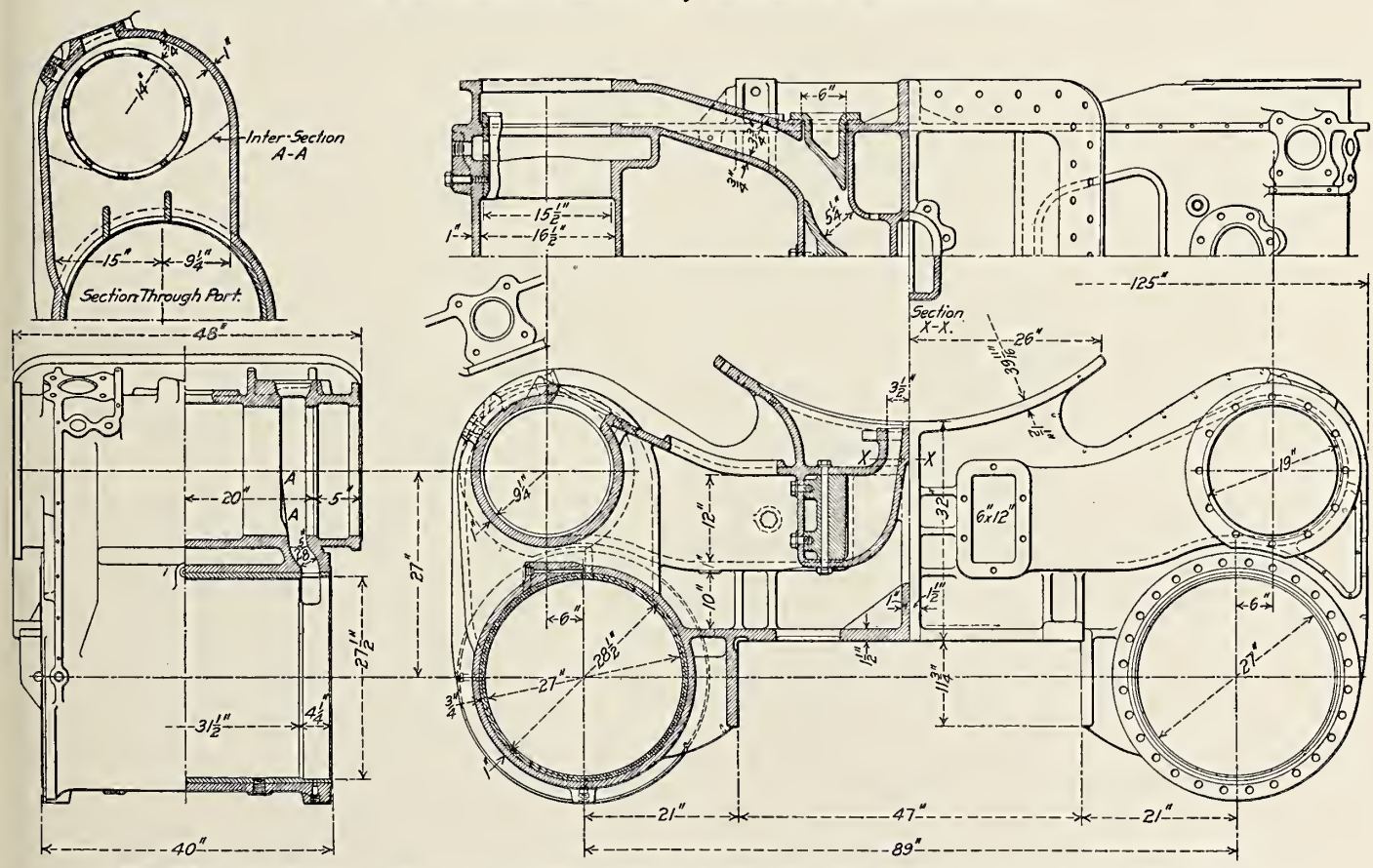

Fig. 578—Vanadium Cast Steel Simple 27 in. x 28 in. Cylinders with Piston Valves and Outside Steam Pipes for Pacific Type (4-6-2) Locomotive N o. 50,000. Built for Experimental Purposes by the American Locomotive Company.

(See Figs. 595-596 for cylinder heads.)

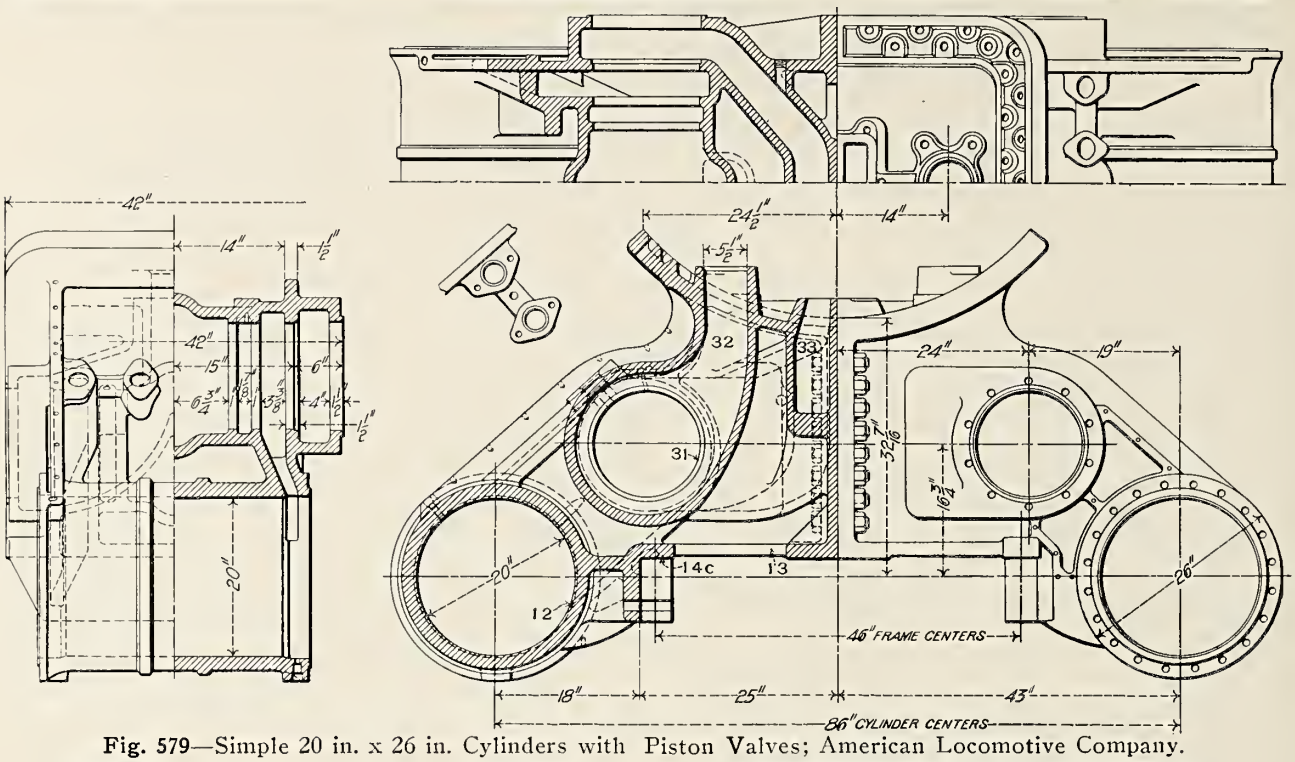

Fig. 579—Simple 20 in. x 26 in. Cylinders with Piston Valves; American Locomotive Company.

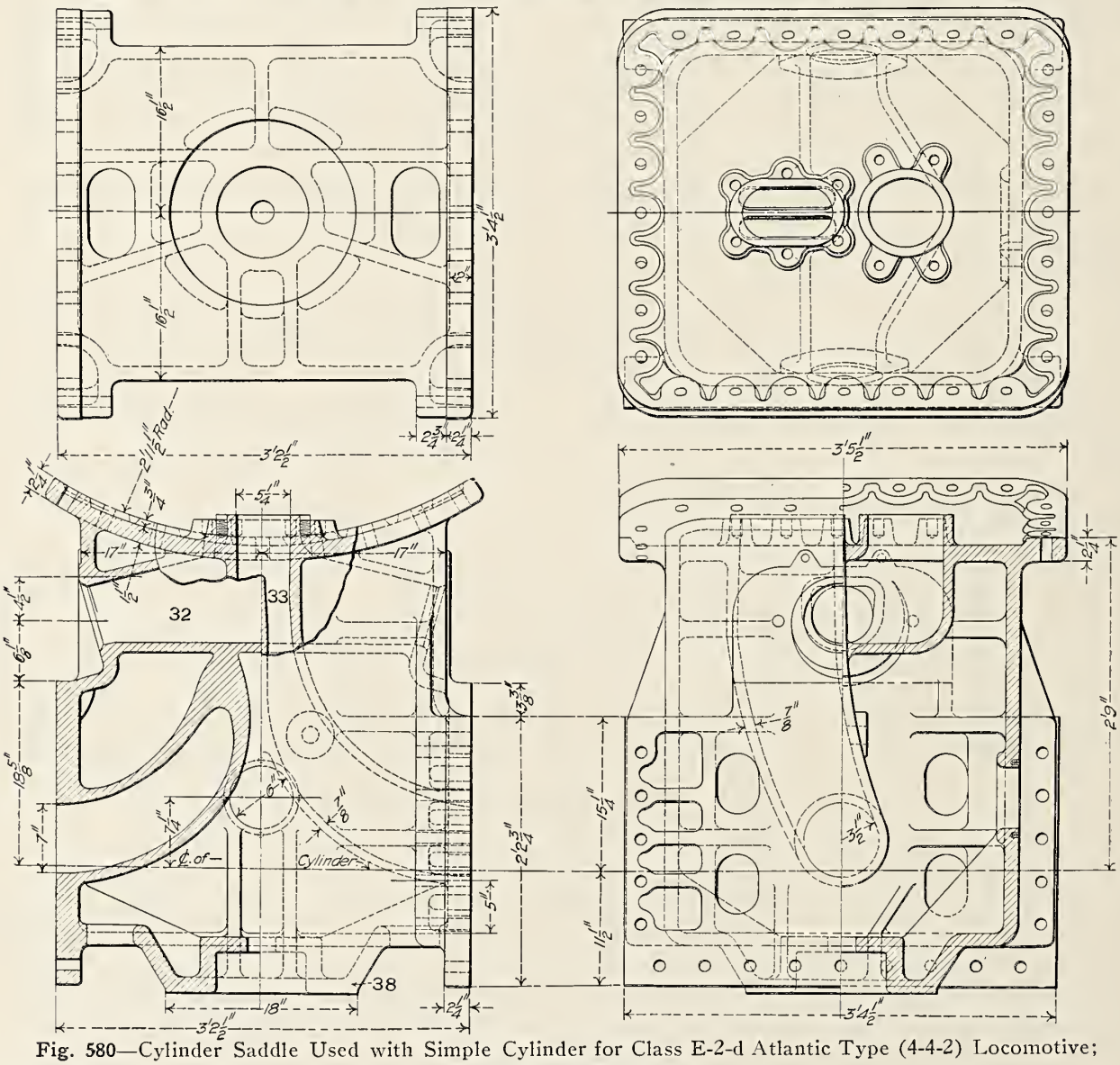

Fig. 580—Cylinder Saddle Used with Simple Cylinder for Class E-2-d Atlantic Type (4-4-2) Locomotive; Pennsylvania Railroad.

Numbers Refer to Names of Parts on Page 359.

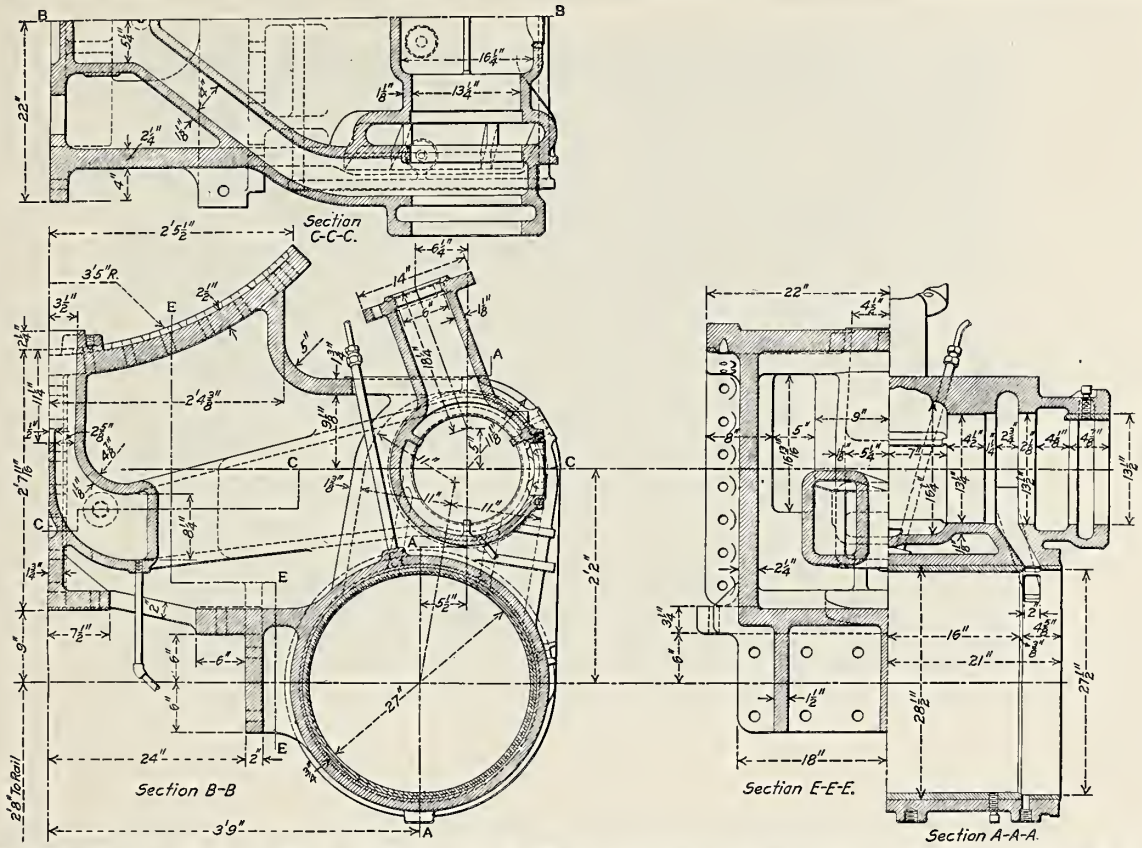

Fig. 581—Simple 27 in. x 30 in. Cylinders with Piston Valves and Outside Steam Pipes for Class L-1-s Mikado (2-8-2) Locomotive; Pennsylvania Railroad.

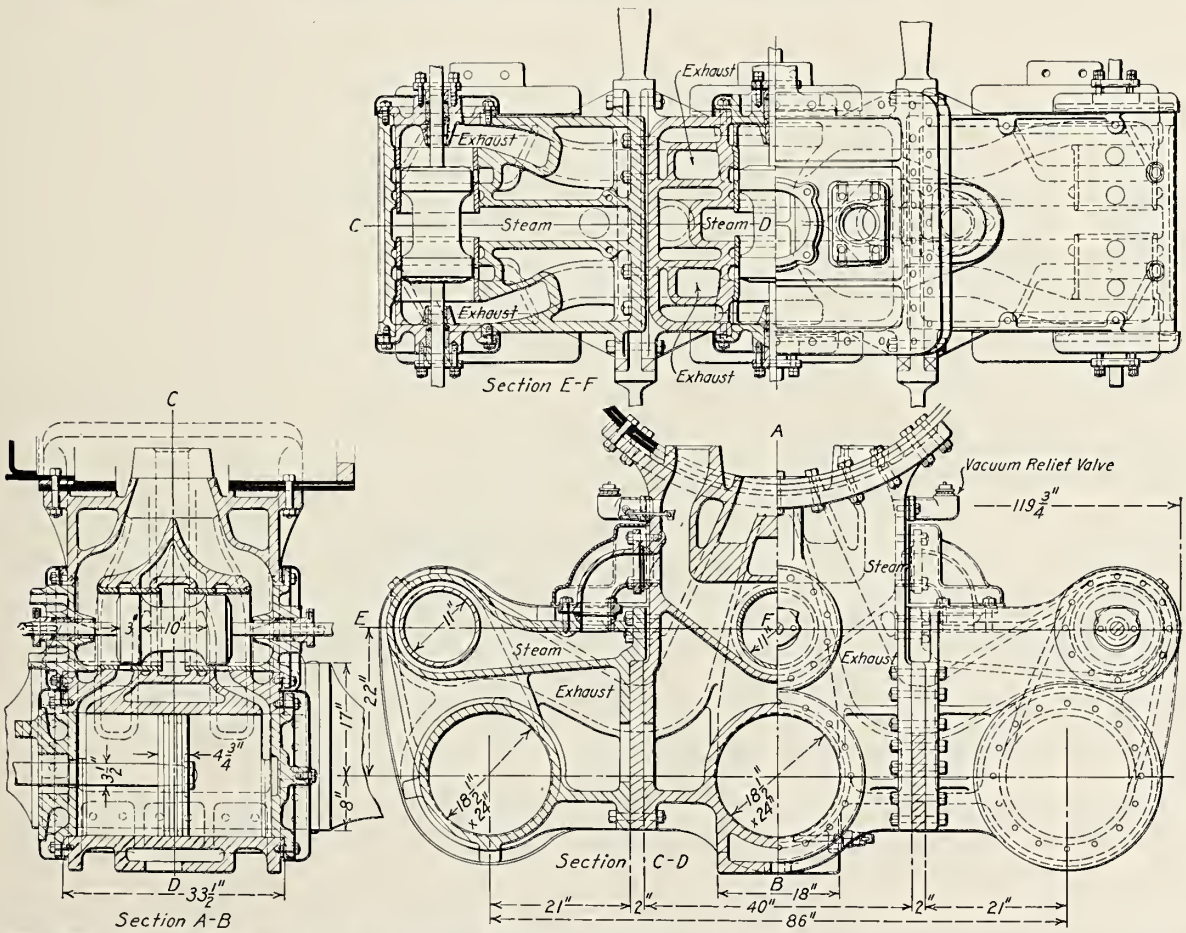

Fig. 582—Simple 18½ in. x 24 in. Cylinders for Atlan tic Type (4-4-2) Three-Cylinder Locomotive; Philadelphia & Reading.

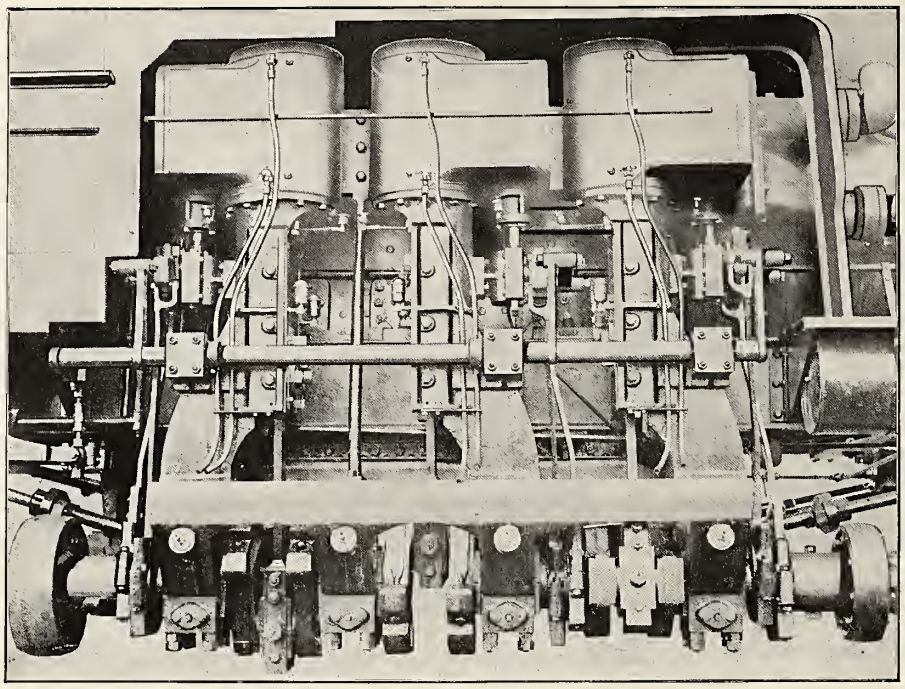

Fig. 583—Arrangement of the Cylinders and Valve Motion of a Shay Geared Locomotive. Built by the Lima Locomotive Corporation.

These three cylinders are mounted on one side of the locomotive just in front of the firebox and form a complete three cylindered vertical steam engine, similar to a marine engine. The connecting rods drive a horizontal crank shaft which is joined at each end by means of flexible couplings to a horizontal driving shaft. The driving shaft is made in sections joined with flexible couplings; it extends the entire length of the locomotive and tender, driving all the axles by means of bevel gears on the shaft and truck wheels.

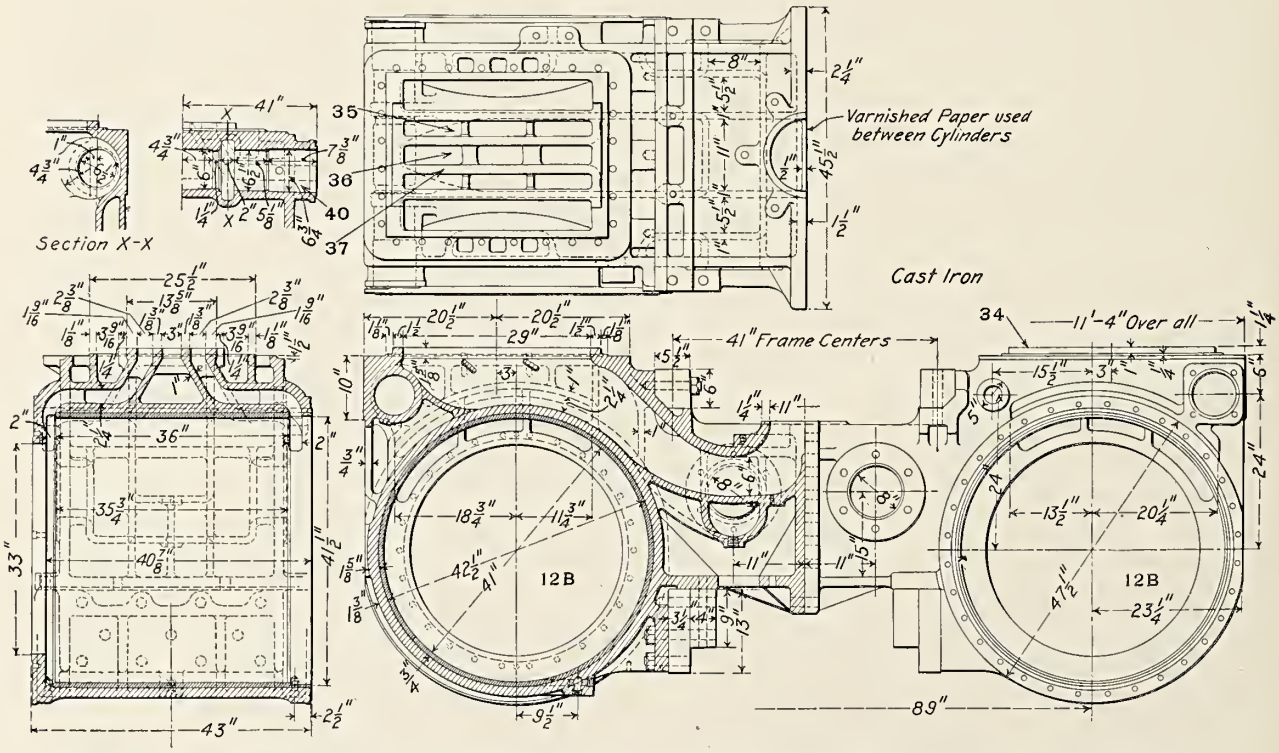

Fig. 584—Low Pressure 41 in. x 32 in. Cylinders for Mallet Articulated (0-8-8-0) Compound Locomotive. Built for the Baltimore & Ohio by the American Locomotive Company.

(*See Figs. 603-604 for cylinder heads.*)

Numbers Refer to Names of Parts on Page 359.

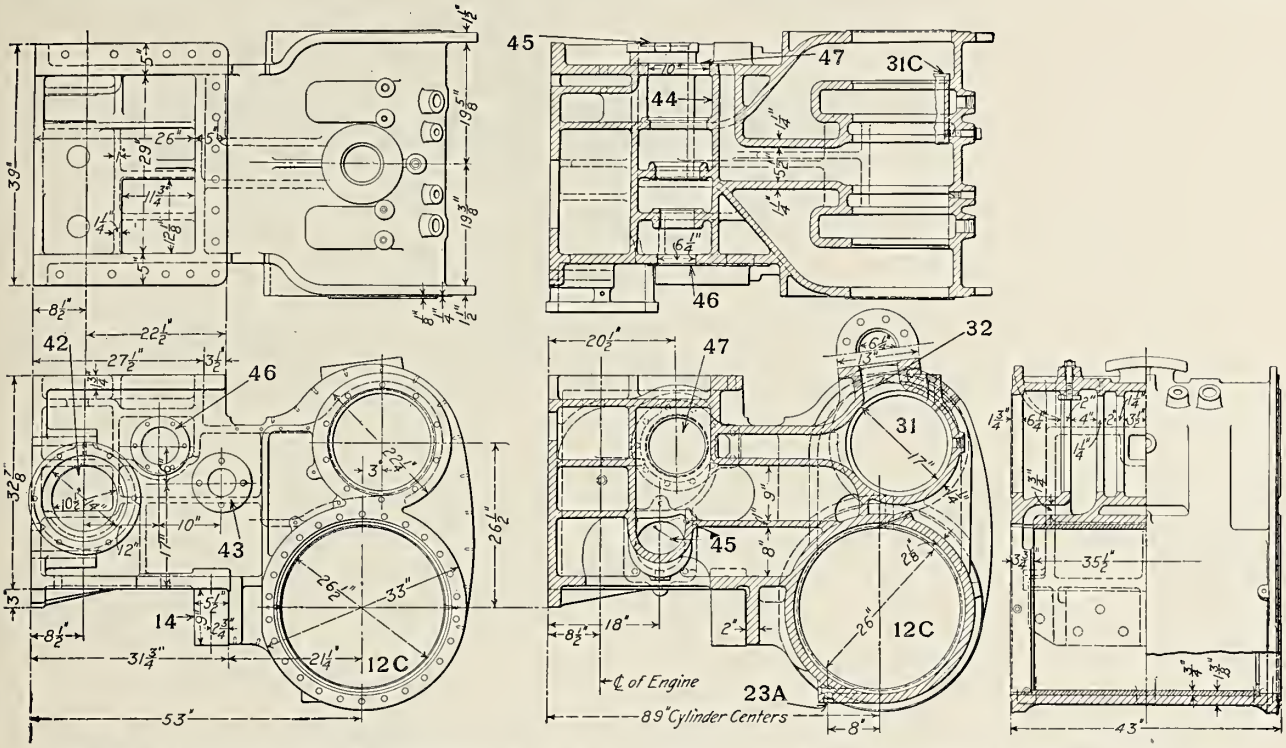

Fig. 585—Left Hand High Pressure 26 in. x 32 in. Cylinder for Mallet Articulated (0-8-8-0) Compound Locomotive. Built for the Baltimore & Ohio by the American Locomotive Company.

(See Figs. 601-602 for cylinder heads.)

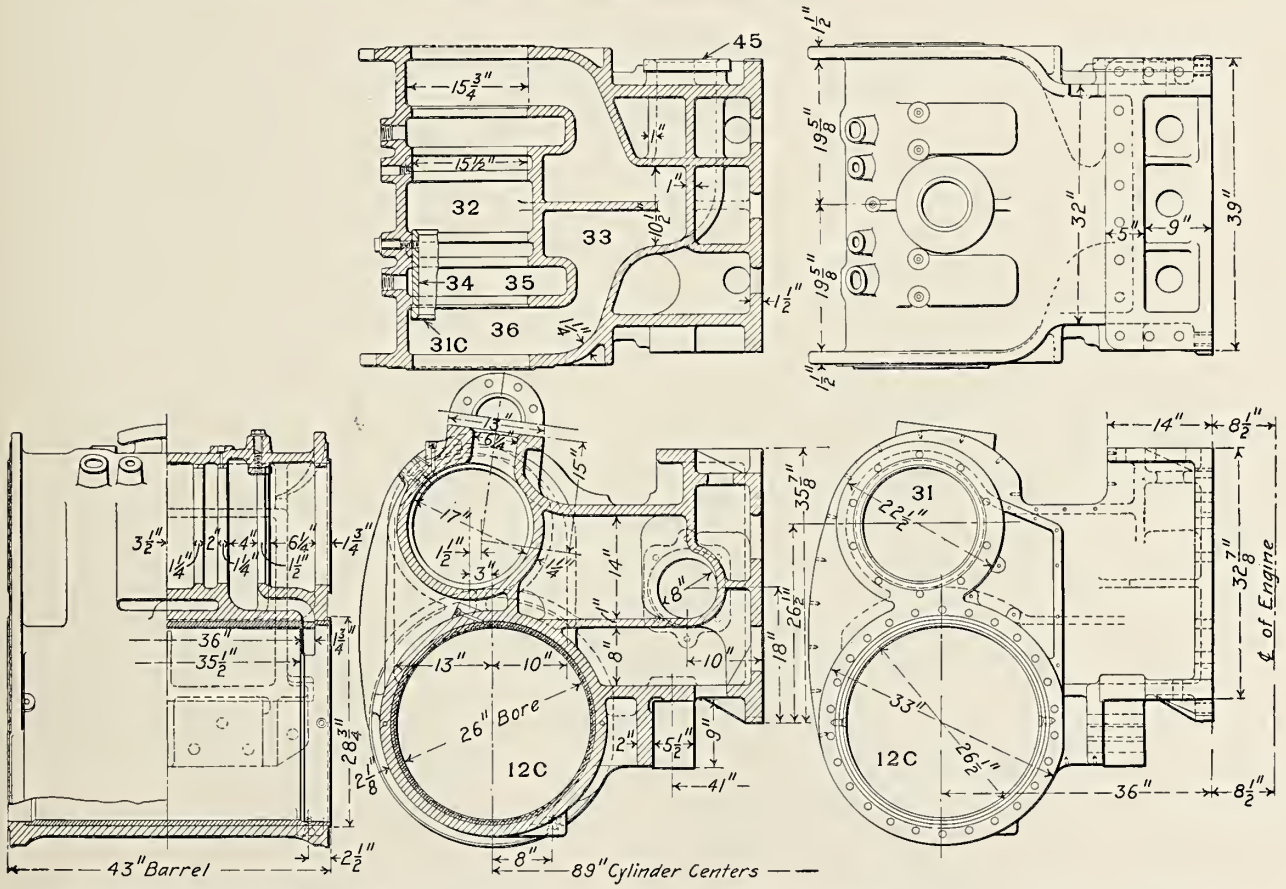

Fig. 586—Right Hand High Pressure 26 in. x 32 in. Cylinder for Mallet Articulated (0-8-8-0) Compound Locomotive. Built for the Baltimore & Ohio by the American Locomotive Company.

(See Figs. 601-602 for Cylinder Heads.)

Numbers Refer to Names of Parts on Page 359.

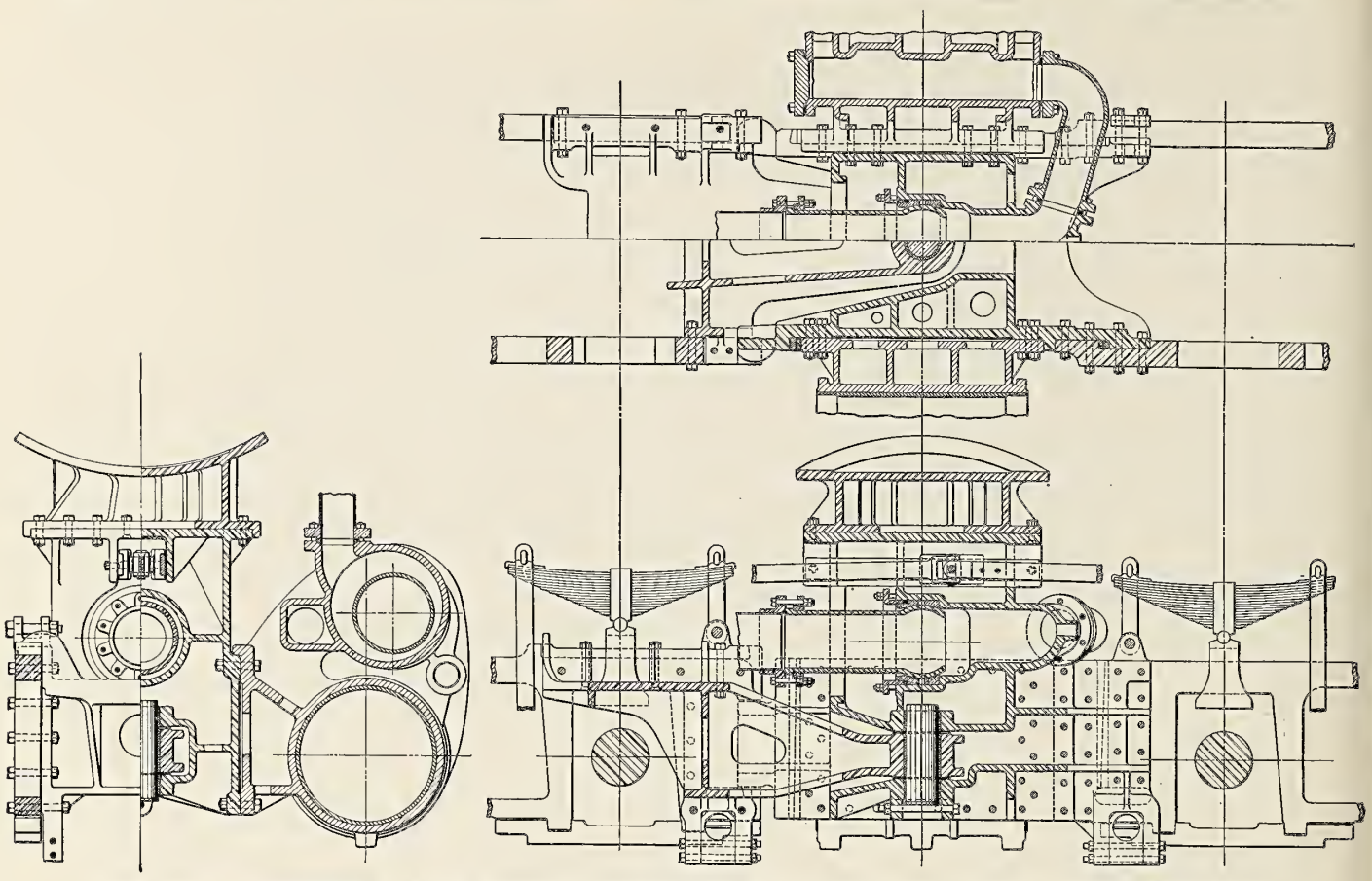

Fig. 587—Arrangement of High Pressure Cylinders and Articulated Frame Joint on Mallet Articulated Compound Locomotives; Baldwin Locomotive Works.

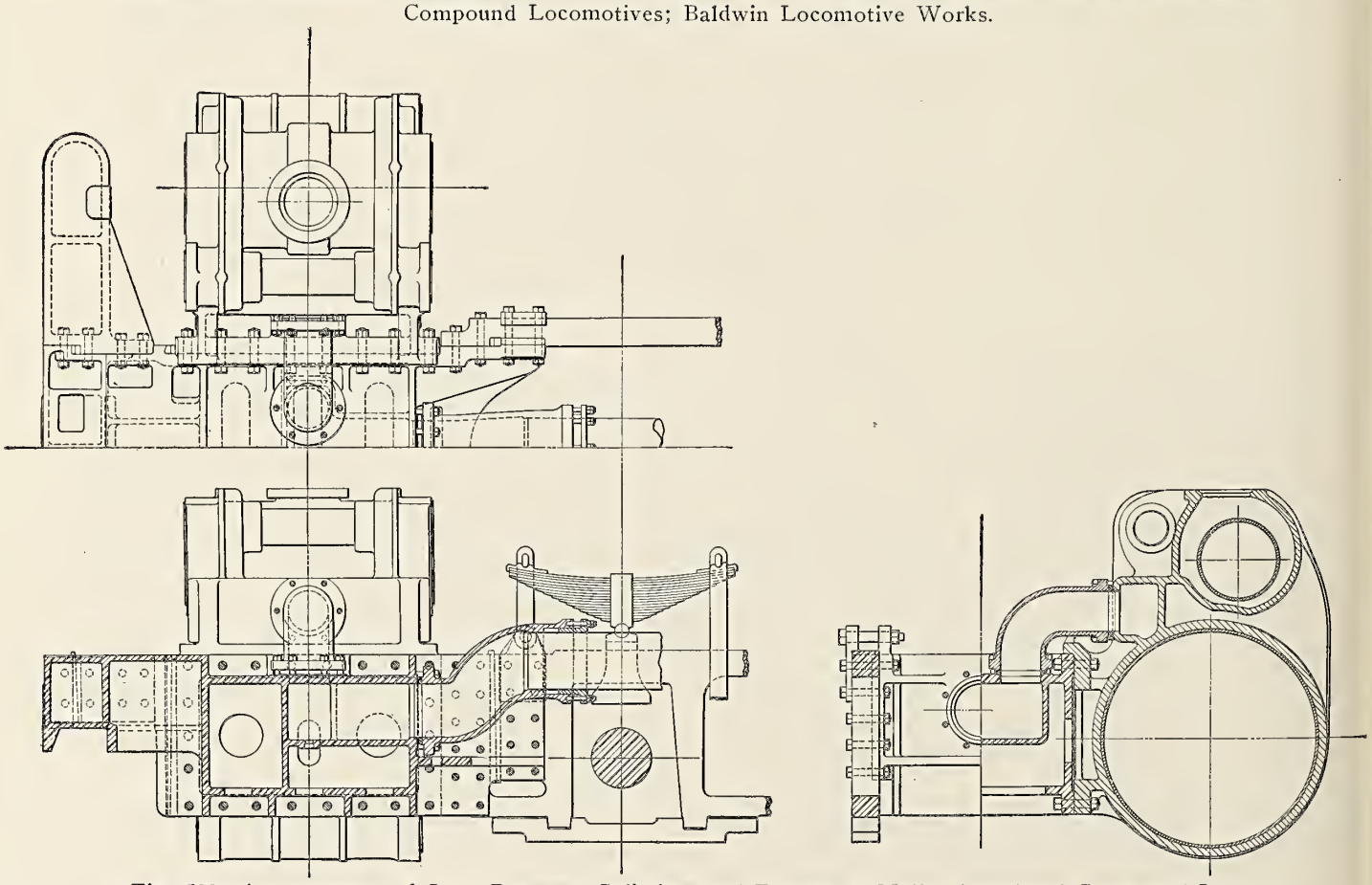

Fig. 588—Arrangement of Low Pressure Cylinders and Frames on Mallet Artculated Compound Locomotives; Baldwin Locomotive Works.

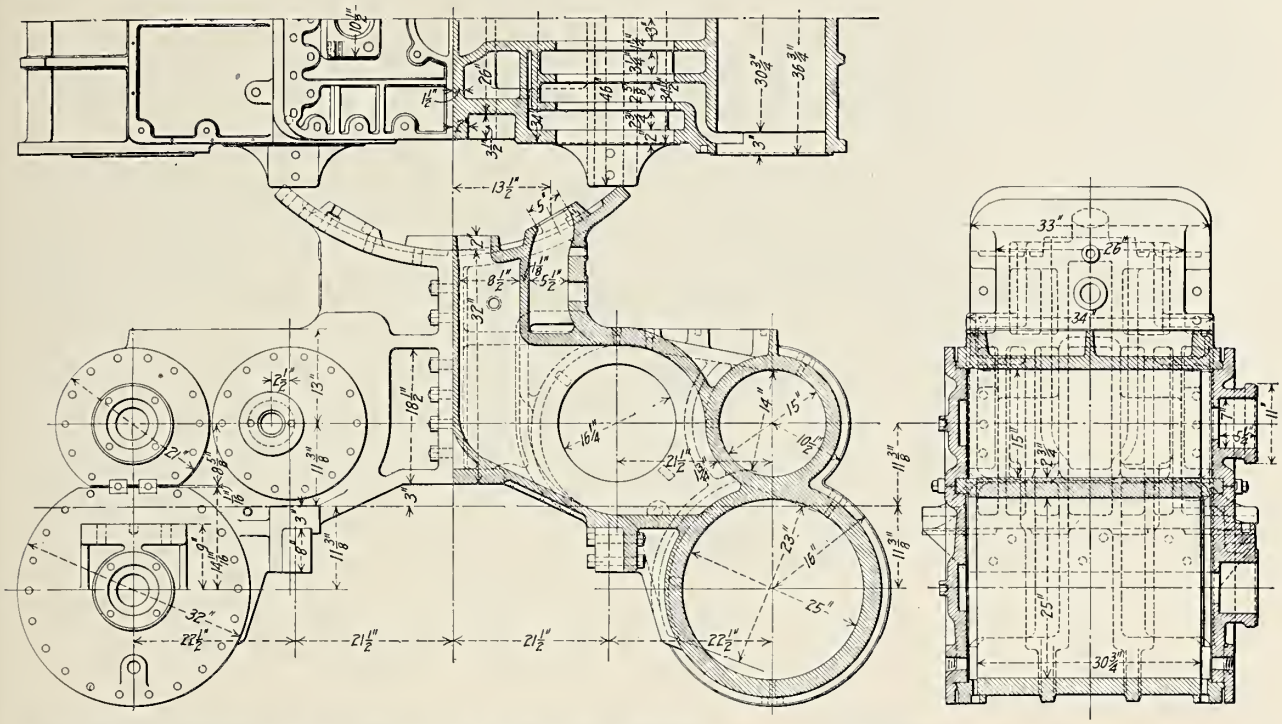

Fig. 589—Cylinders 15 in. and 25 in. x 28 in. for Atlantic Type (4-4-2) Vauclain Compound Locomotive. Built for the Chicago, Milwaukee & St. Paul by the Baldwin Locomotive Works.

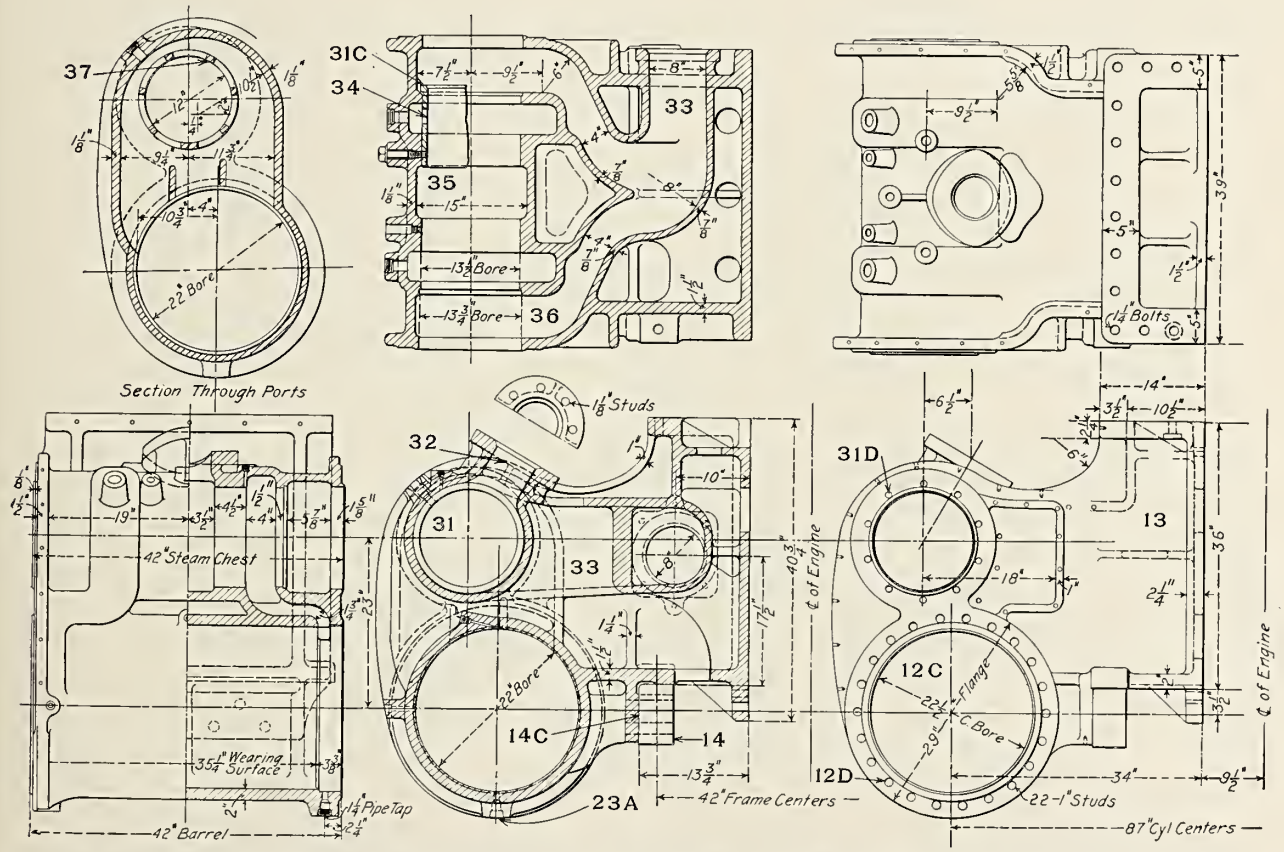

Fig. 590—Right Hand High Pressure 22 in. x 32 in. Cylinder for Mallet Articulated (2-6-6-2) Compound Locomotive. Built for the Norfolk & Western by the American Locomotive Company.

(*See Figs. 591-593 for other cylinders.*)

Numbers Refer to Names of Parts on Page 359.

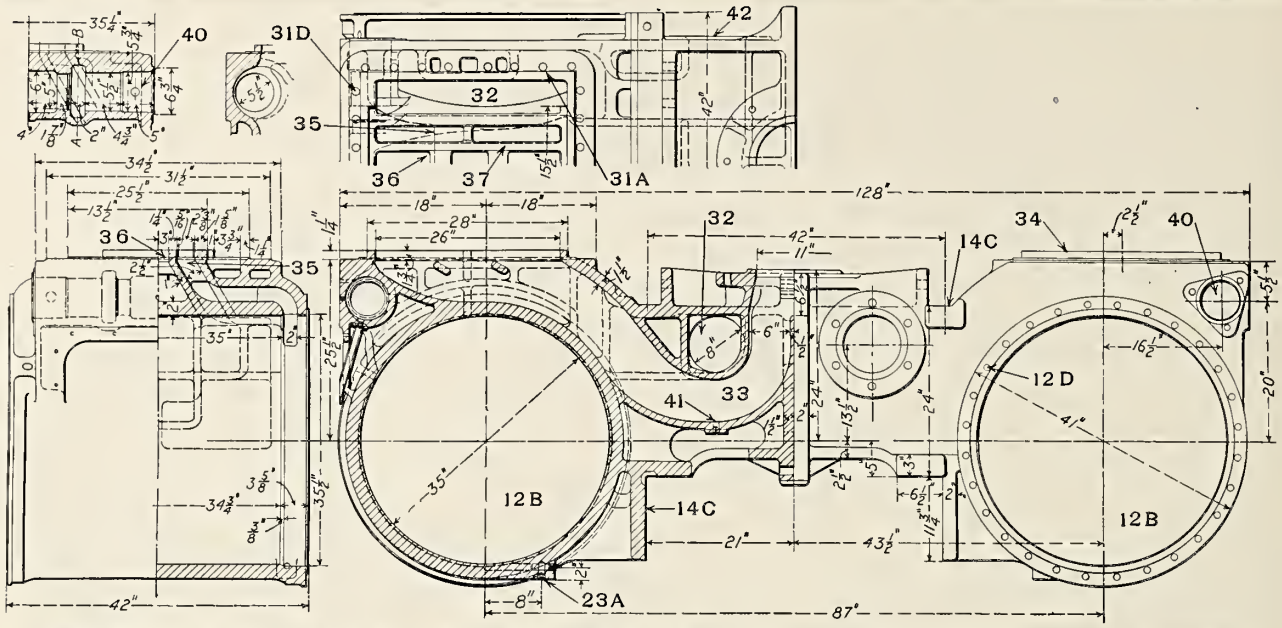

Fig. 591—Low Pressure 35 in. x 32 in. Cylinders for Mallet Articulated (2-6-6-2) Compound Locomotive. Built for the Norfolk & Western by the American Locomotive Company.

(See Figs. 590-593 for other cylinders.)

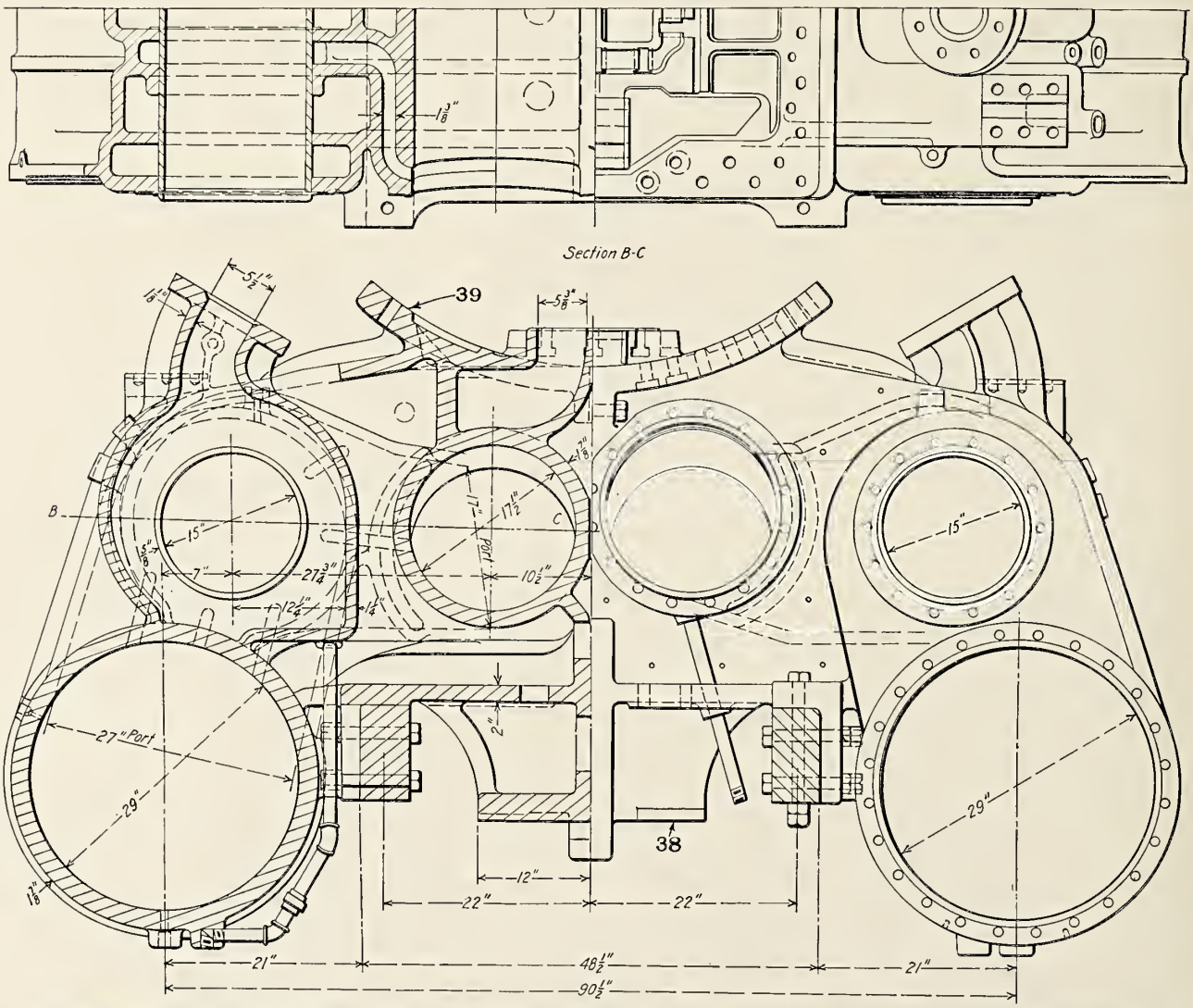

Fig. 592—Cylinders 17½ in. and 29 in. x 28 in. for Pacific Type (4-6-2) Balanced Compound Locomotive. Built for the Atchison, Topeka & Santa Fe by the Baldwin Locomotive Works.

Numbers Refer to Names of Parts on Page 359.

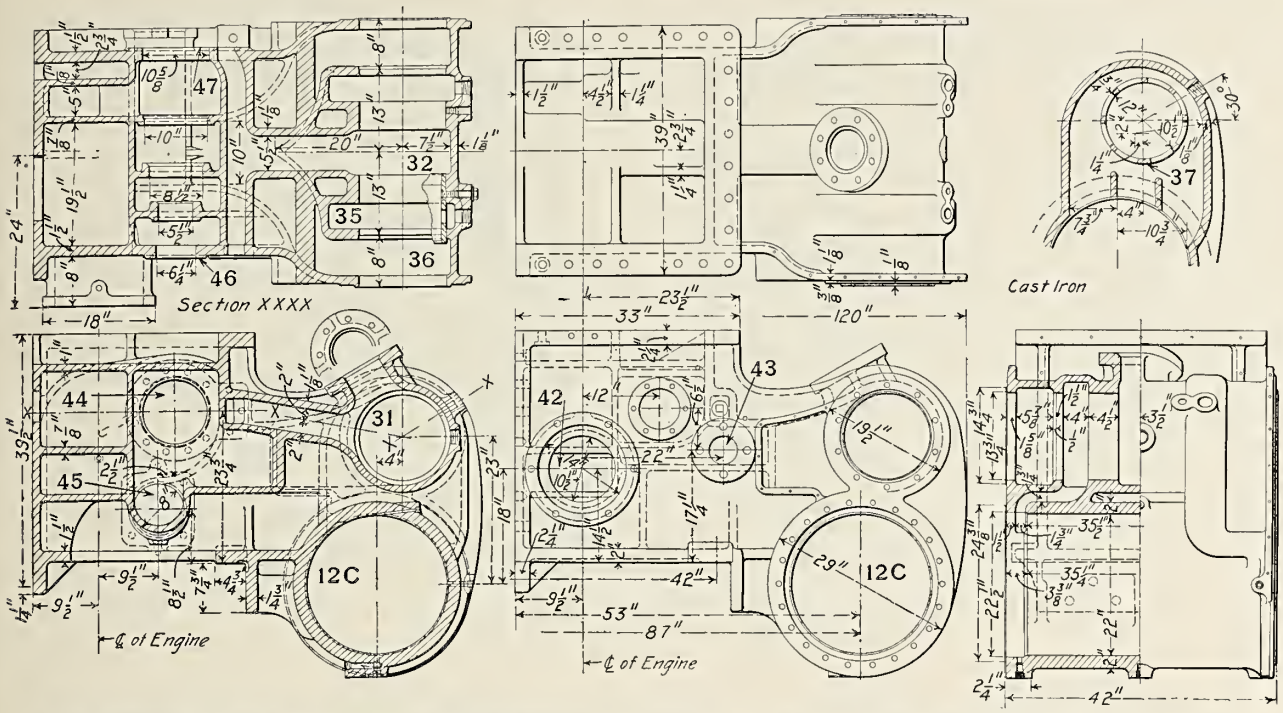

Fig. 593—Left Hand 22 in. x 32 in. High Pressure Cylinder for Mallet Articulated (2-6-6-2) Compound Locomotive. Built for the Norfolk & Western by the American Locomotive Company.

(*See Figs.* 590-591 *for other cylinders.*)

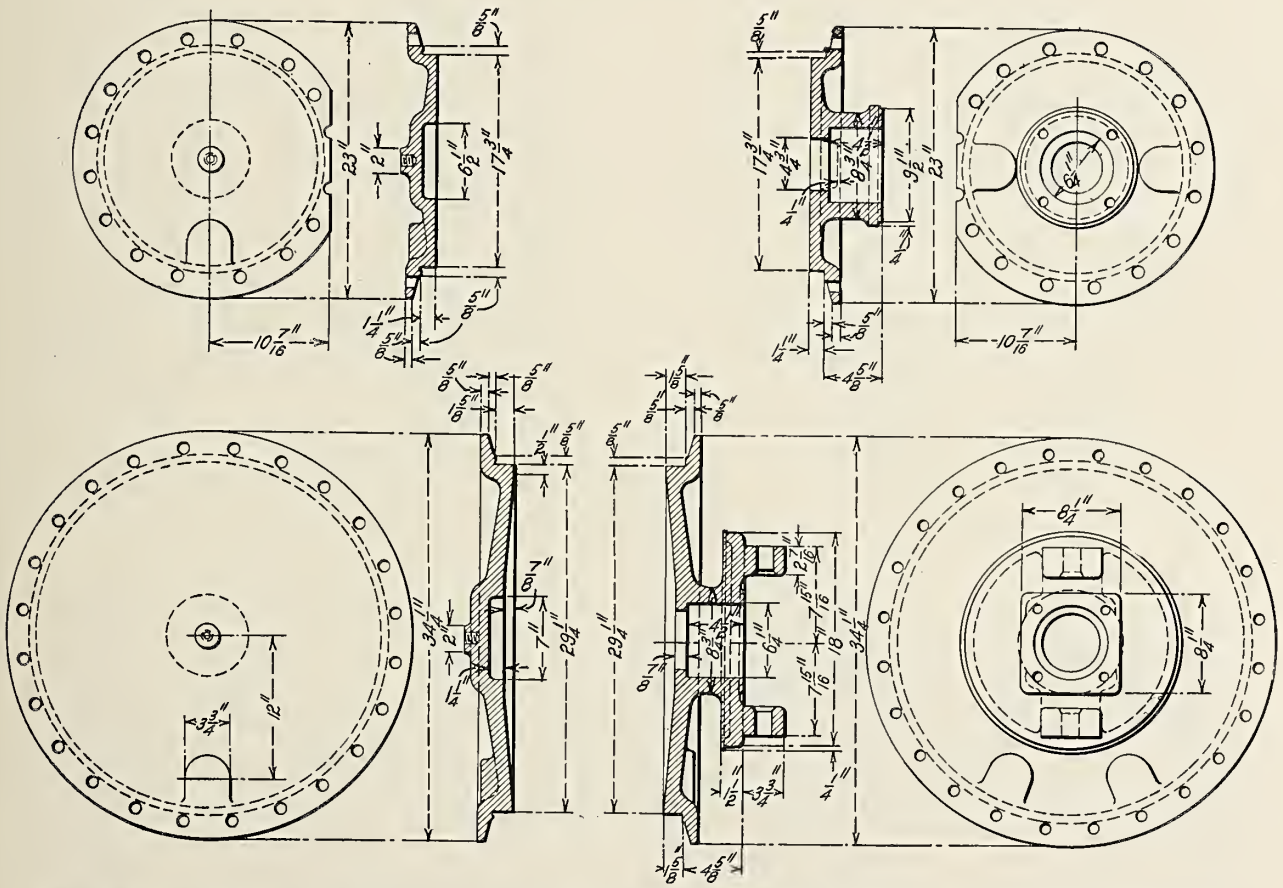

Fig. 594—Cylinder Heads for Pacific Type (4-6-2) Four-Cylinder Balanced Compound Locomotive. Built for the Atchison, Topeka & Santa Fe by the Baldwin Locomotive Works.

Numbers Refer to Names of Parts on Page 359.

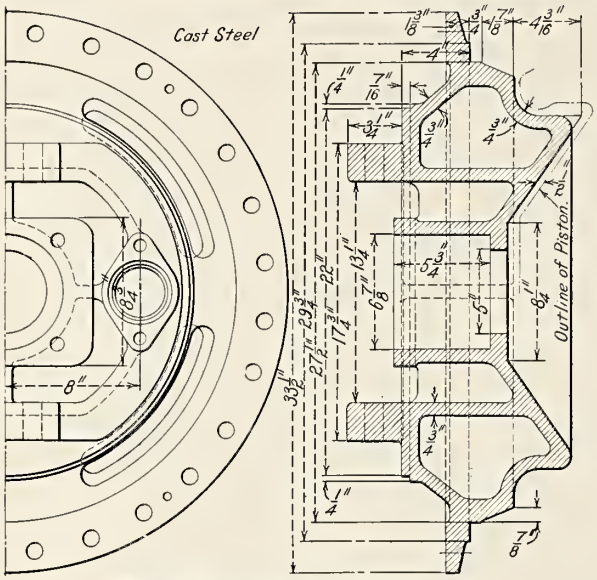

Fig. 595—Back Cylinder Head.

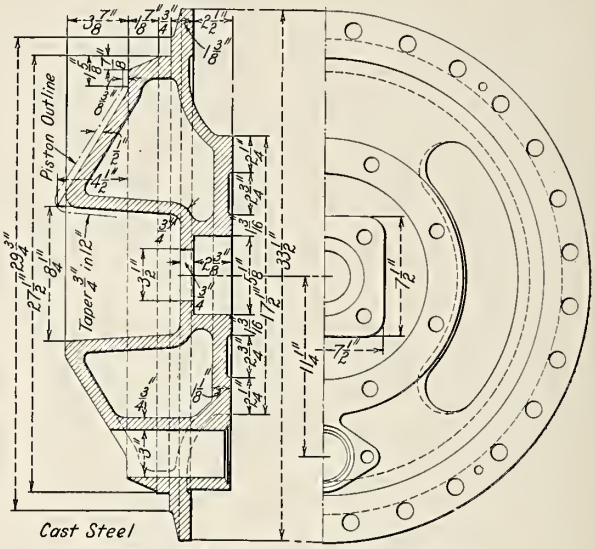

Fig. 596—Front Cylinder Head.

Cylinder Heads for Pacific Type (4-6-2) Locomotive No. 50,000. Built for Experimental Purposes by the American Locomotive Company.

(*See Fig.* 578 *for cylinders.*)

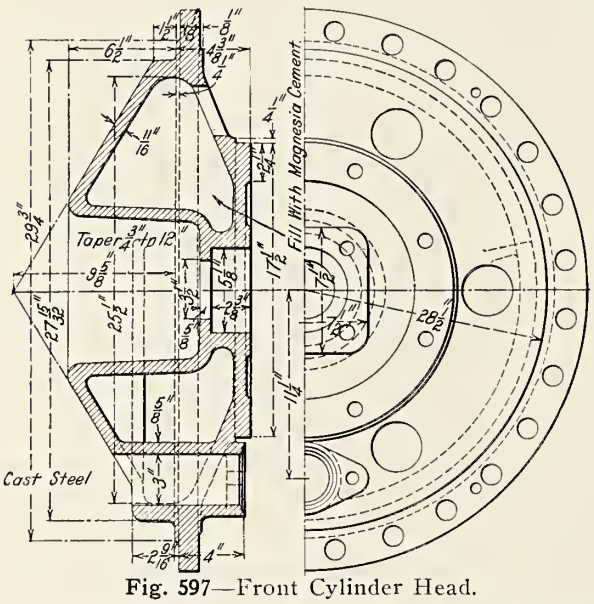

Fig. 597—Front Cylinder Head.

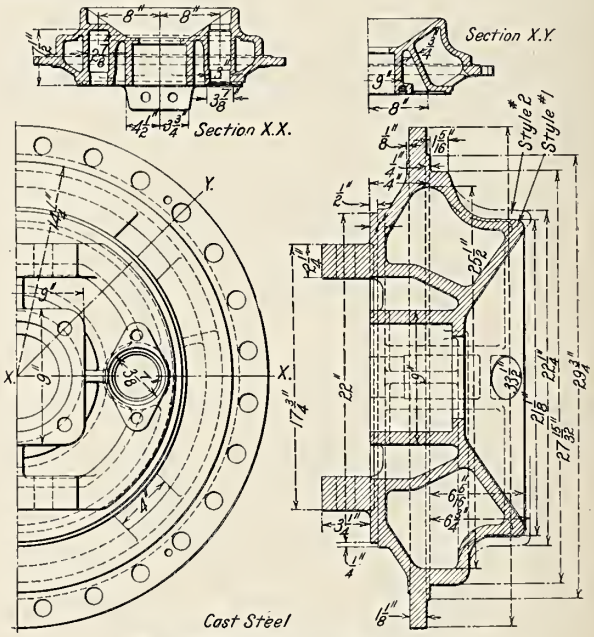

Fig. 598—Back Cylinder Head.

Cylinder Heads for Pacific Type (4-6-2) Locomotive. Built for the Pennsylvania by the American Locomotive Company.

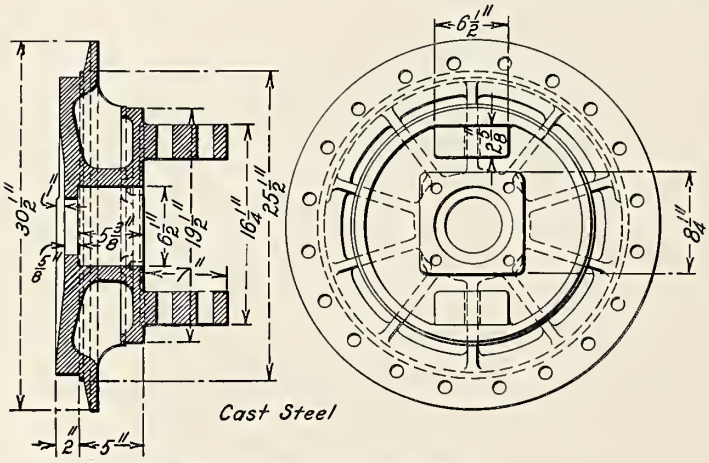

Fig. 599—Back Cylinder Head.

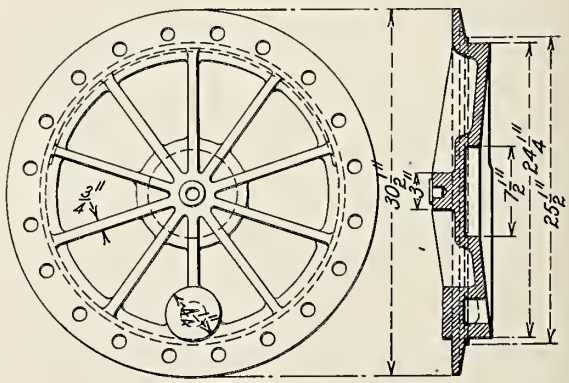

Fig. 600—Front Cylinder Head.

Cylinder Heads for Pacific Type (4-6-2) Locomotive. Built for the Nashville, Chattanooga & St. Louis by the Baldwin Locomotive Works.

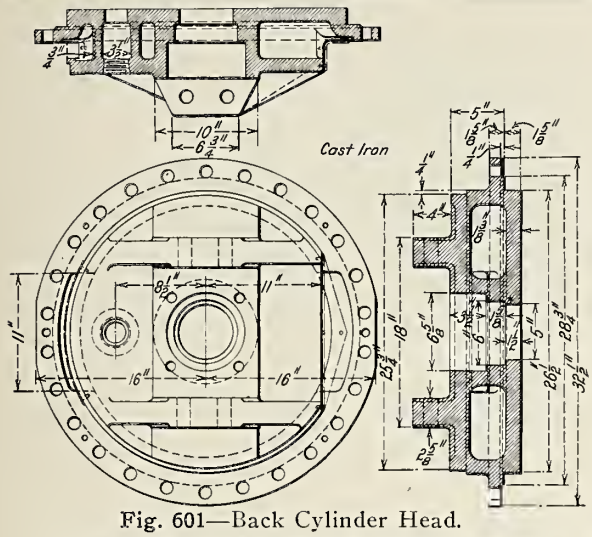

Fig. 601—Back Cylinder Head.

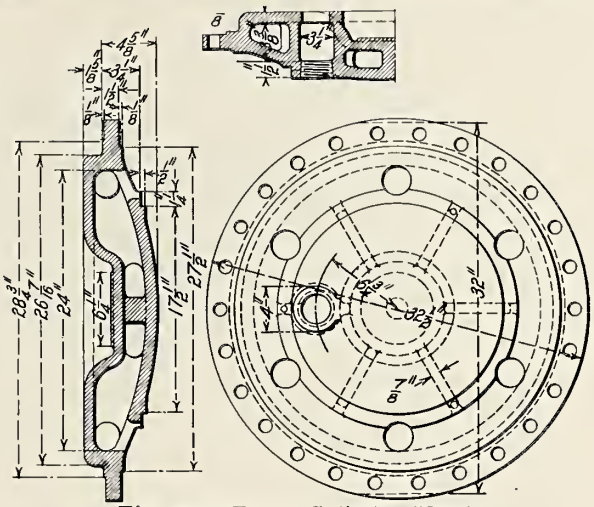

Fig. 602—Front Cylinder Head.

Cylinder Heads for High Pressure Cylinders on Mallet Articulated (0-8-8-0) Compound Locomotive. Built for the Baltimore & Ohio by the American Locomotive Company.

(*See Figs.* 585-586 *for cylinders.*)

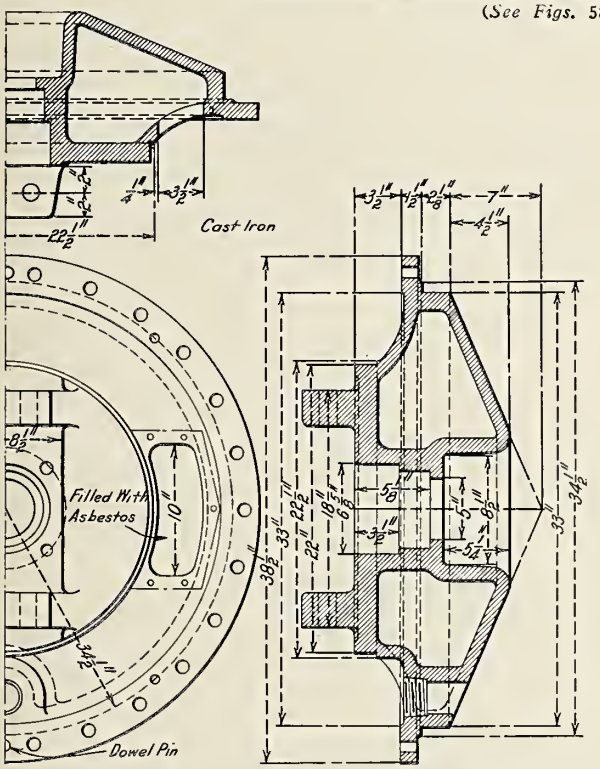

Fig. 603—Back Cylinder Head.

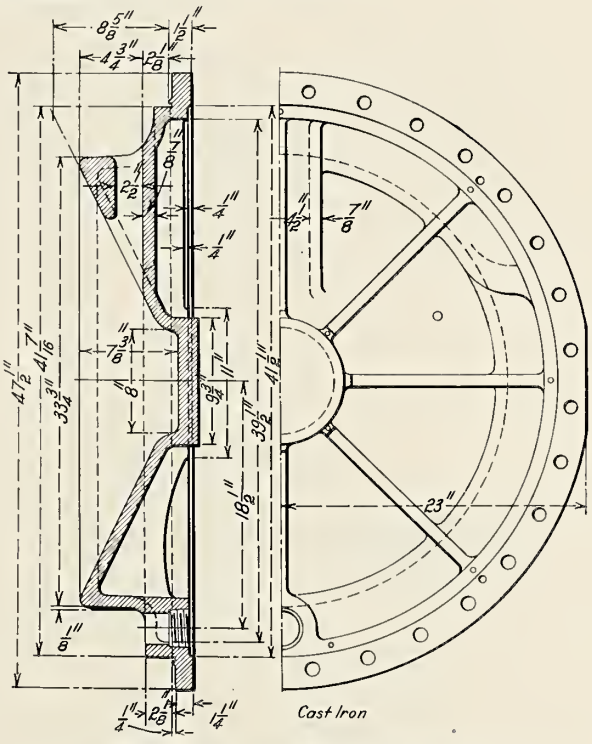

Fig. 604—Front Cylinder Head.

Cylinder Heads for Low Pressure Cylinders on Mallet Articulated (0-8-8-0) Compound Locomotive. Built for the Baltimore & Ohio by the American Locomotive Company.

(*See Fig.* 584 *for cylinders.*)

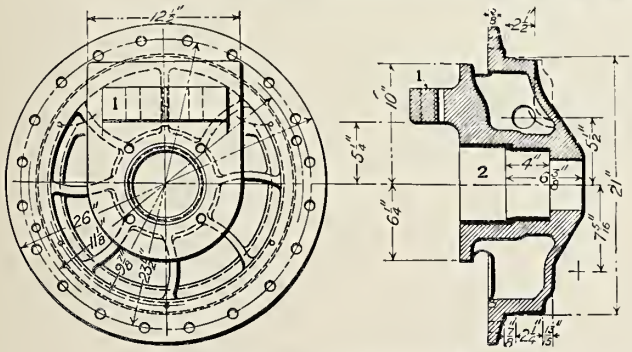

Fig 605—Back Cylinder Head.

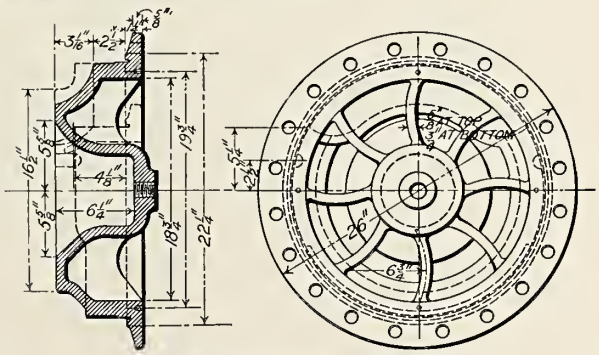

Fig. 606—Front Cylinder Head.

Cylinder Heads for Atlantic Type (4-4-2) Locomotive; Pennsylvania Railroad.

Numbers Refer to Names of Parts on Page 359.

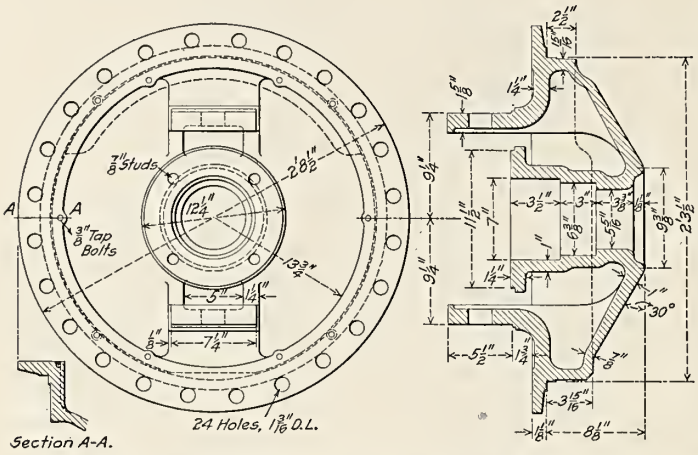

Fig. 607—Back Cylinder Head for Class L-1-s Mikado (2-8-2) Locomotive; Pennsylvania Railroad.

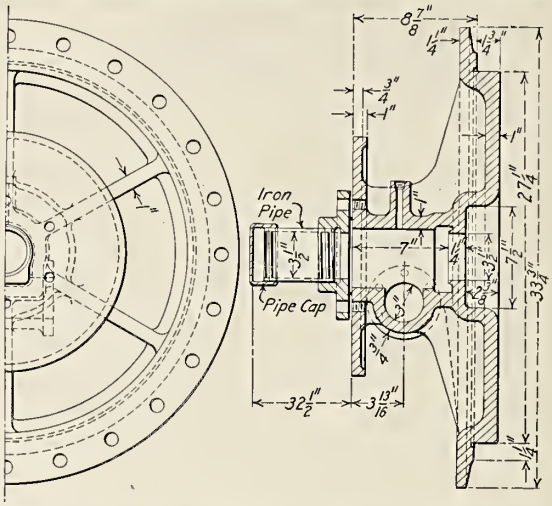

Fig. 608—Arrangement of Front Cylinder Head and Piston Rod Guide; Baldwin Locomotive Works.

Names of Parts of Compound Attachments, Figs. 609-612.

1 *Reducing Valve*
2 *Intercepting Valve*
3 *Dash Pot Piston*
4 *Intercepting Valve Chamber Head*
5 *Unbalancing Valve*
6 *High Pressure Exhaust or Emergency Valve*
7 *Emergency Valve Chamber Head*
8 *Intercepting Valve Stem*
9 *Intercepting Valve Stem Packing Rings*
10 *Reducing Valve Packing Rings*
11 *Dash Pot Piston Packing Rings*
12 *Dash Pot*
13 *Dash Pot Head*
14 *Dash Pot Exhaust Port*
15 *Live Steam Chamber*
16 *Receiver Pipe Chamber*
17 *High Pressure Cylinder Exhaust Steam Passage*
18 *High Pressure Exhaust Passage to Main Exhaust Pipe*
19 *Emergency Valve Stem*
20 *Emergency Valve Spring*
21 *Connection for Starting Valve in Cab*

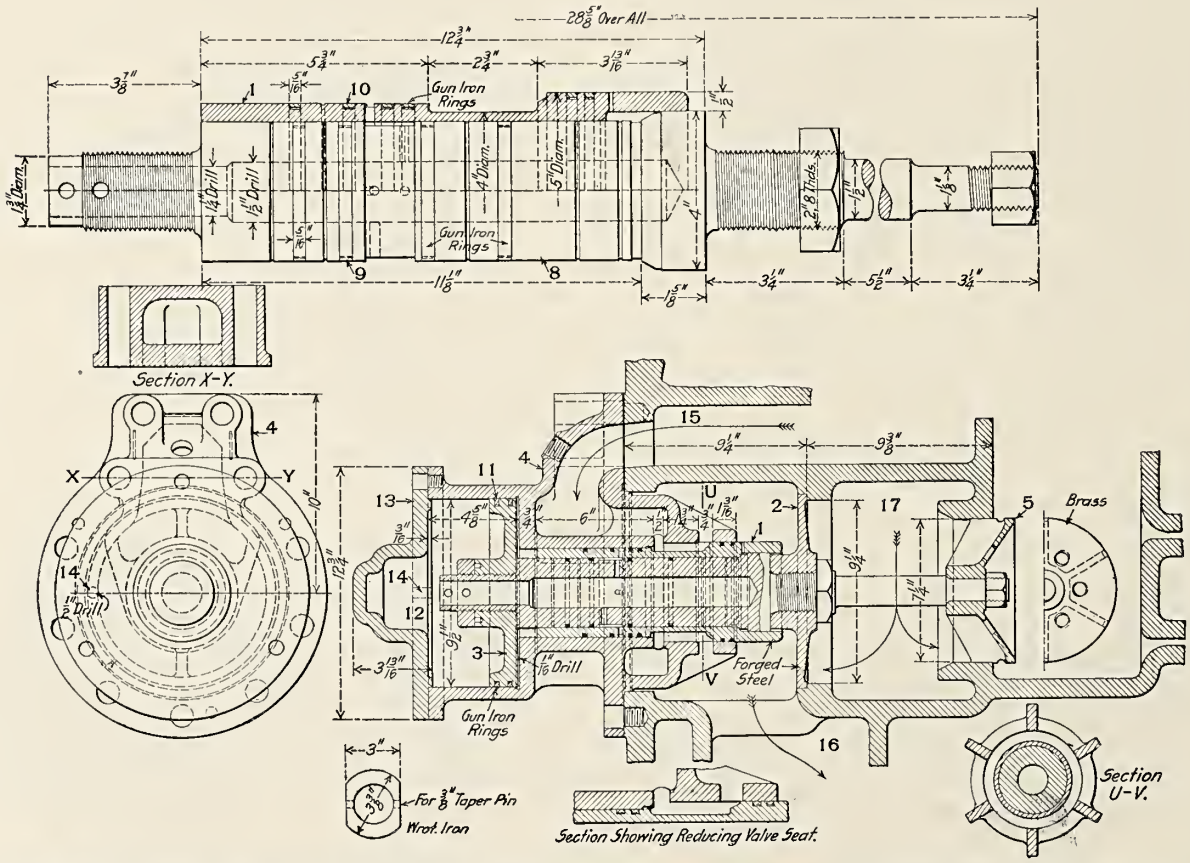

Fig. 609—Intercepting Valve for Mallet Articulated (0-8-8-0) Compound Locomotive. Built for the Baltimore & Ohio by the American Locomotive Company.

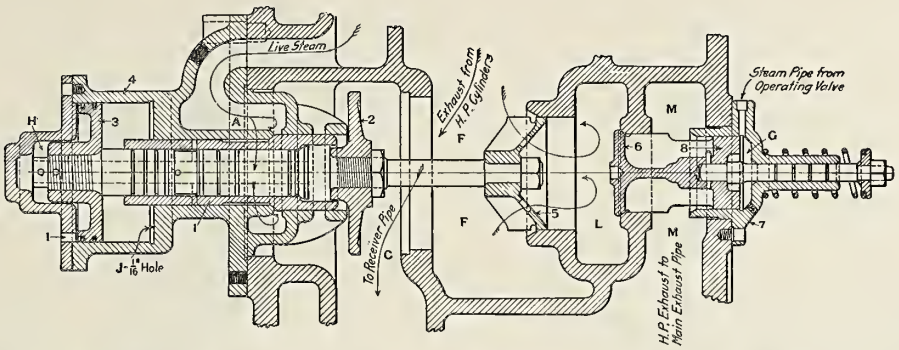

Fig. 610—Intercepting Valve in the Position the Parts Automatically Assume When the Locomotive is Working Compound; American Locomotive Company.

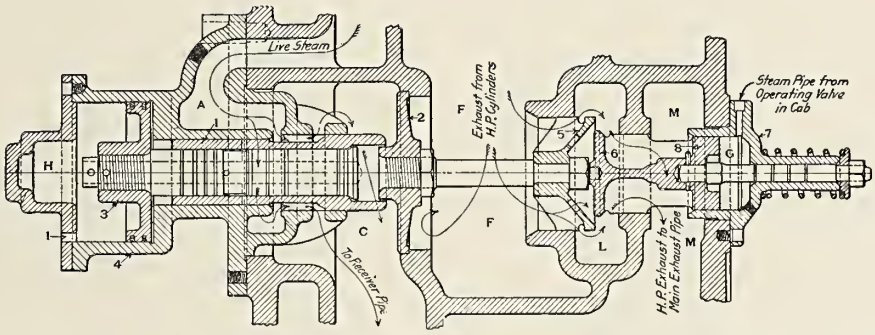

Fig. 611—Intercepting Valve in Position When the Locomotive is Working Simple; American Locomotive Company.

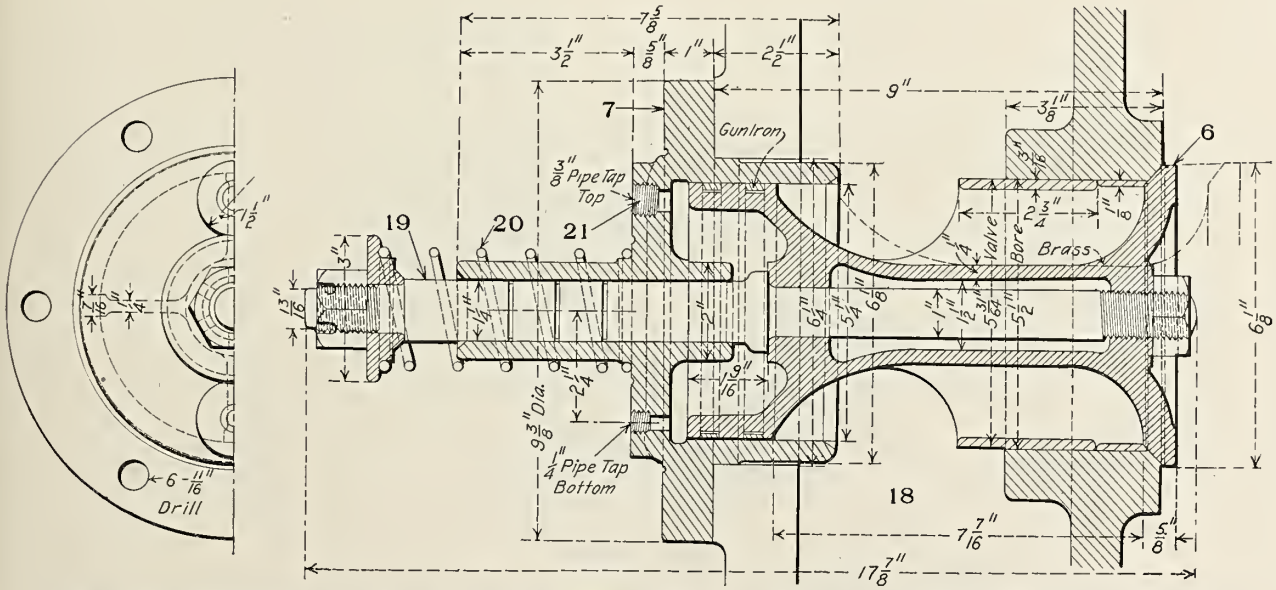

Fig. 612—Emergency or High Pressure Exhaust Valve for Mallet Articulated (0-8-8-0) Compound Locomotive. Built for the Baltimore & Ohio by the American Locomotive Company.

Numbers Refer to Names of Parts on Page 372.

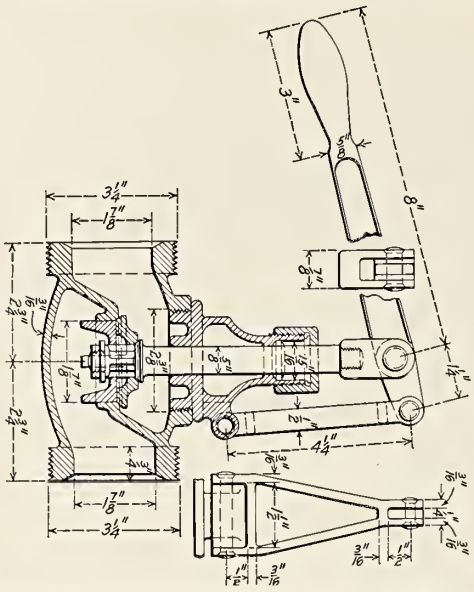

Fig. 613—Line Valve Used in Starting Valve Pipe on Mallet Articulated Compound Locomotives; Baldwin Locomotive Works.

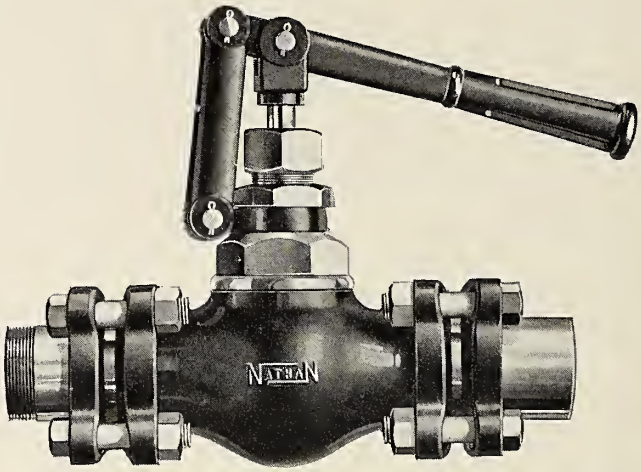

Fig. 614—Balanced Starting Valve; Nathan Manufacturing Company.

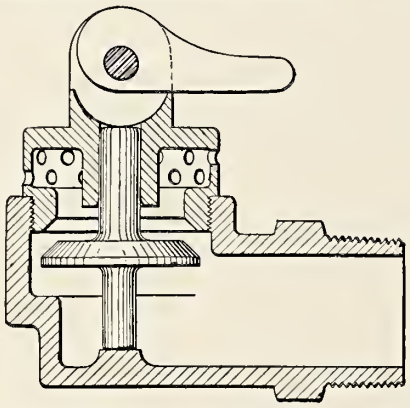

Fig. 615—Steam Chest Relief Valve; Nathan Manufacturing Company.

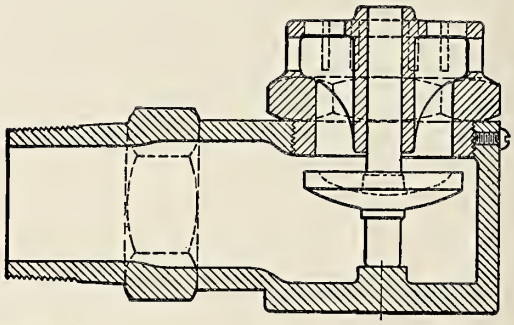

Fig. 616—Steam Chest Relief Valve; Nathan Manufacturing Company.

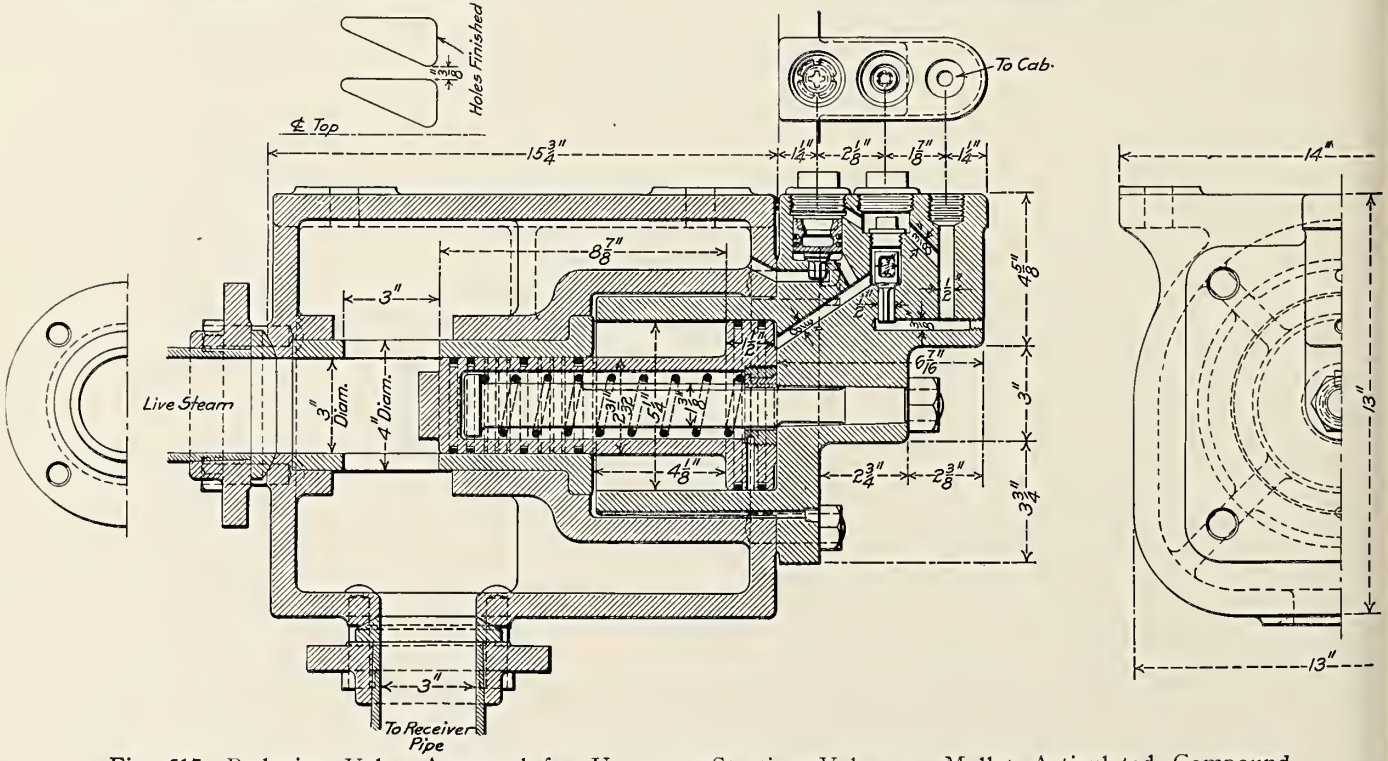

Fig. 617—Reducing Valve Arranged for Use as a Starting Valve on Mallet Articulated Compound Locomotives; Baldwin Locomotive Works.

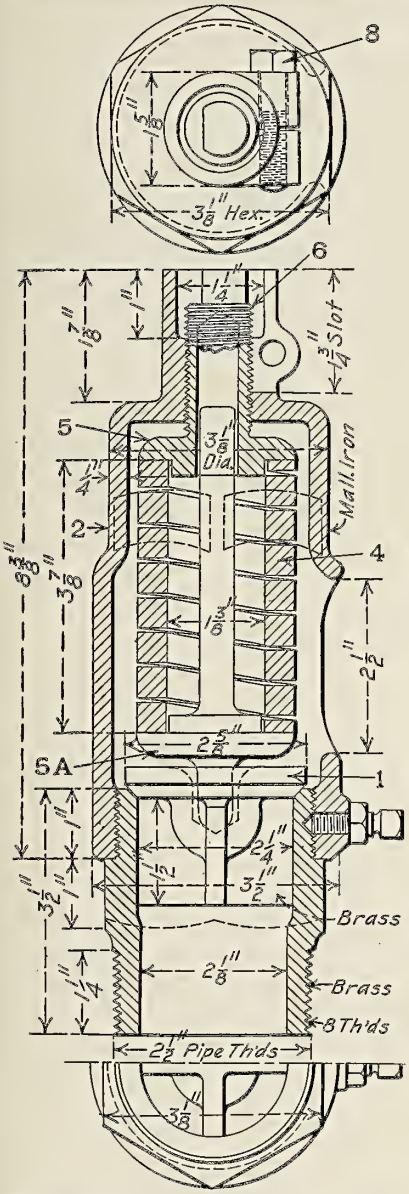

Fig. 618—Cylinder Head Relief Valve; American Locomotive Company.

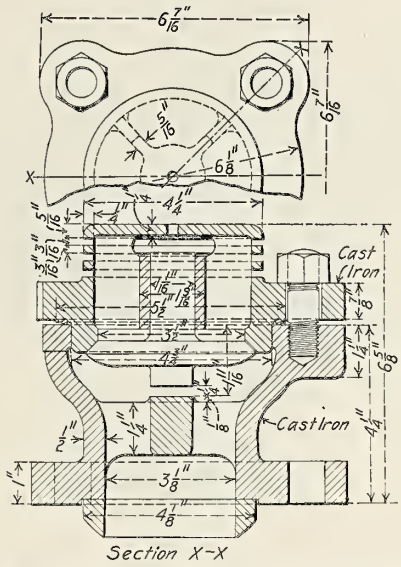

Fig. 619—Steam Chest Vacuum Valve; American Locomotive Company.

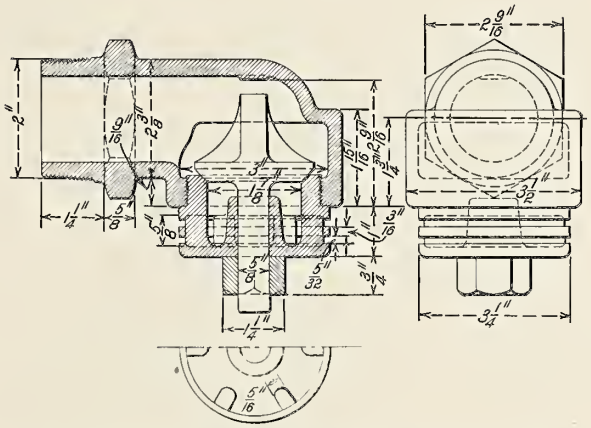

Fig. 620—Relief Valve for Slide Valve Locomotive; Baldwin Locomotive Works.

Names of Parts of Relief and By-pass Valves, Figs. 618-633.

1 *Valve*
2 *Body or Casing*
3 *Cap*
4 *Pressure or Adjusting Spring*
5 *Pressure Spring Cap*
5A *Pressure Spring Seat*
6 *Adjusting Screw*
7 *Adjusting Screw Check Nut*
8 *Adjusting Screw Clamp Bolt*
9 *Strainer*
10 *Valve Balancing Spring*

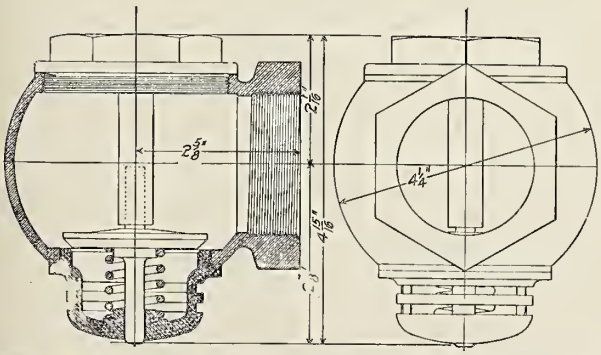

Fig. 621—Vacuum Valve; American Steam Gauge & Valve Manufacturing Company.

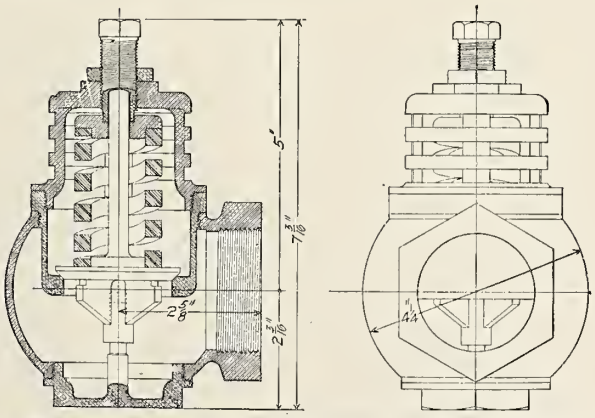

Fig. 622—Cylinder Relief Valve; American Steam Gauge & Valve Manufacturing Company.

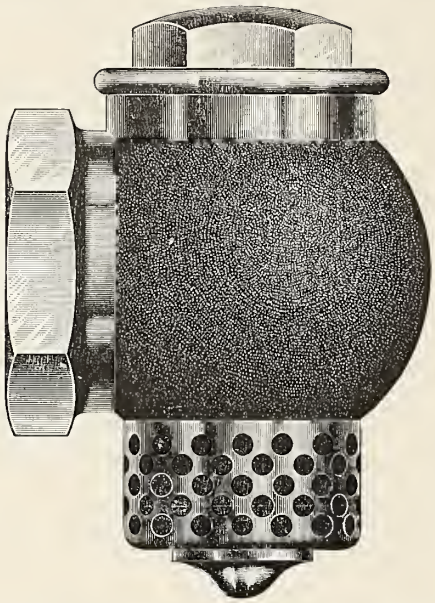

Fig. 623—Vacuum Valve; Ashton Valve Company.

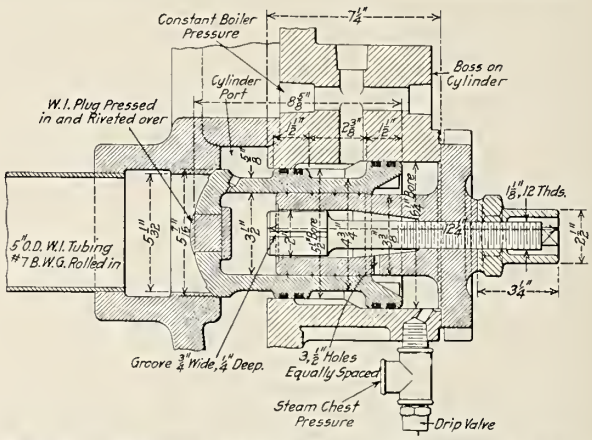

Fig. 624—By-pass Drifting Valve; Delaware, Lackawanna & Western.

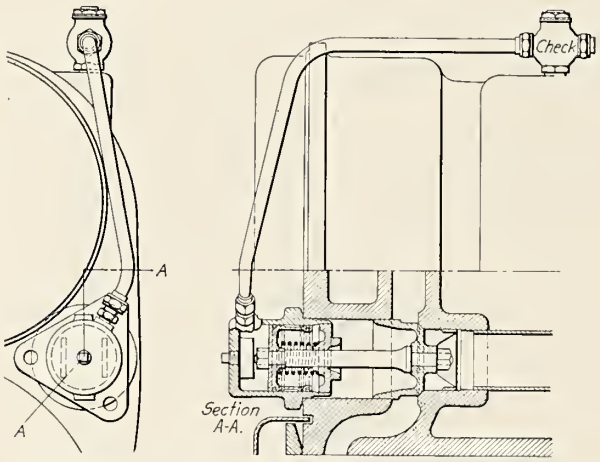

Fig. 625—Application of Sheedy By-pass Valve; Baldwin Locomotive Works.

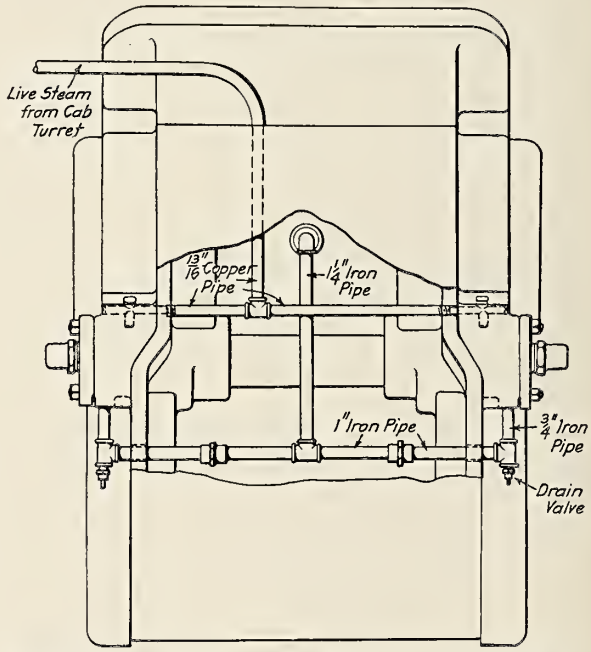

Fig. 626—Arrangement of Steam Connections for By-pass Drifting Valve; Delaware, Lackawanna & Western.

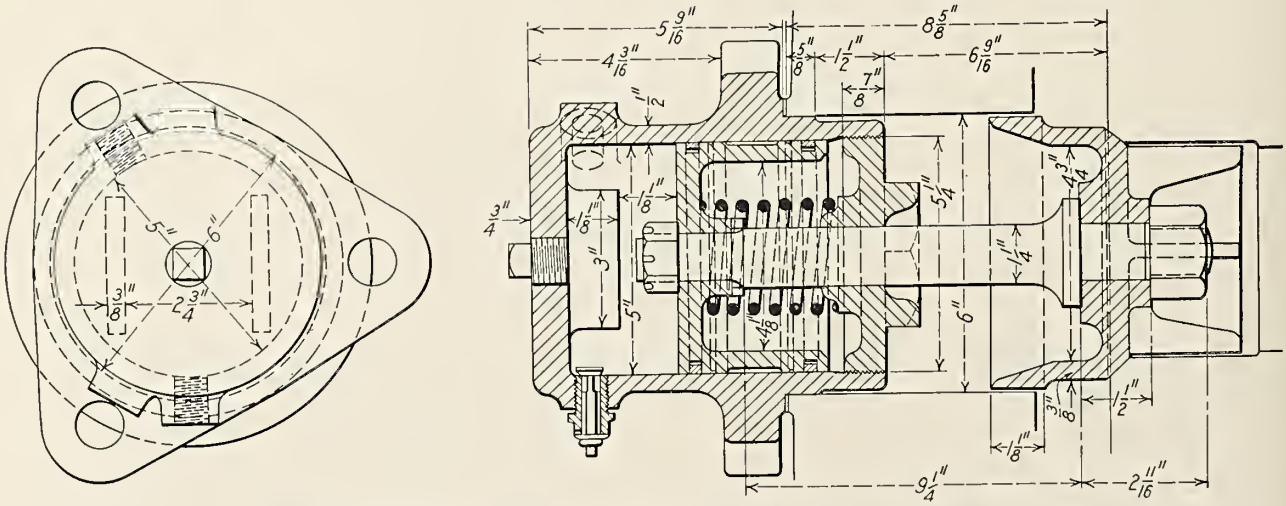

Fig. 627—Sheedy By-pass Valve; Baldwin Locomotive Works.

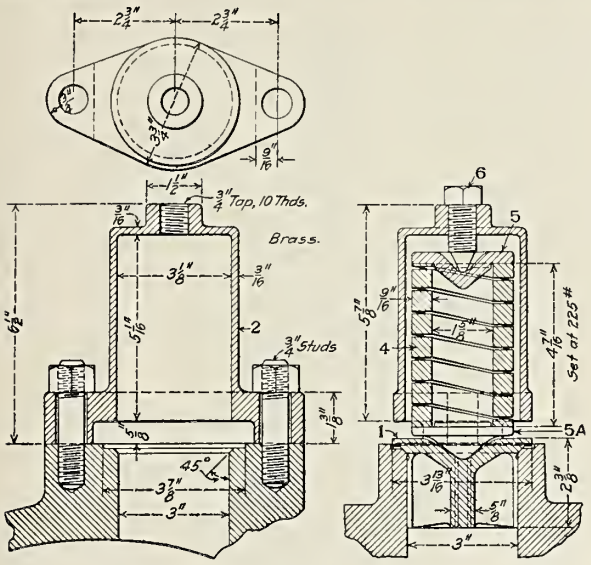

Fig. 628—Steam Chest Relief Valve; American Locomotive Company.

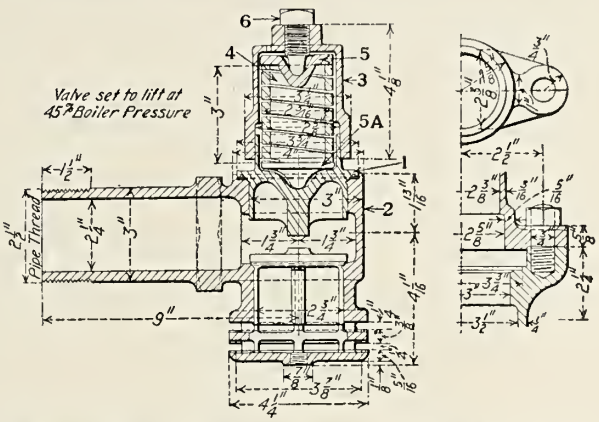

Fig. 629—Steam Chest Vacuum and Relief Valve for Low Pressure Cylinders on Mallet Articulated Compound Locomotives; American Locomotive Company.

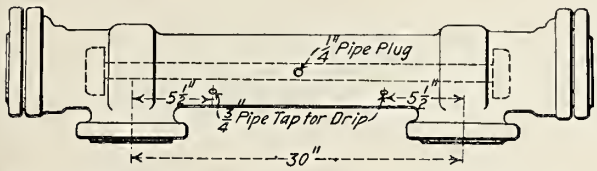

Fig. 630—Mellin By-pass Valve as Applied to Mountain Type (4-8-2) Locomotive. Interior same as Fig. 632. Built for the Chesapeake & Ohio by the American Locomotive Company.

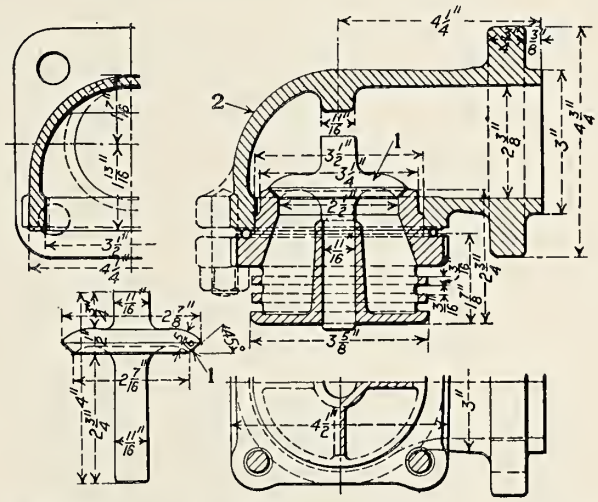

Fig. 631—Steam Chest Vacuum Valve; American Locomotive Company.

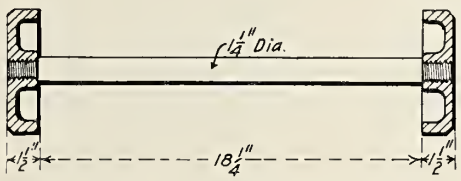

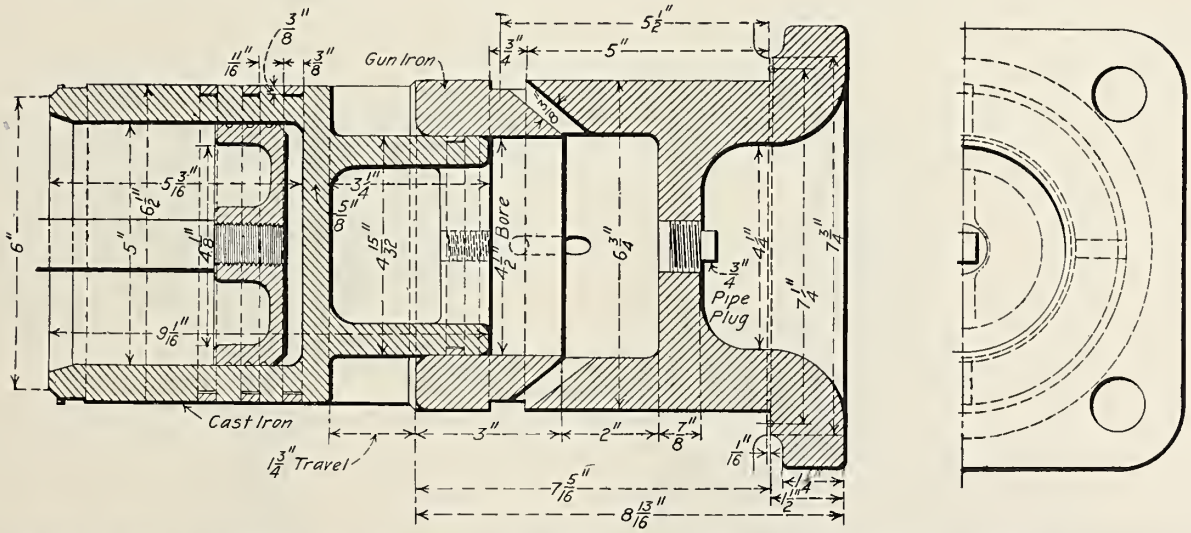

Fig. 632—Mellin By-pass Valve for Mallet Articulated Compound Locomotives; American Locomotive Company.

Numbers Refer to Names of Parts on Page 375.

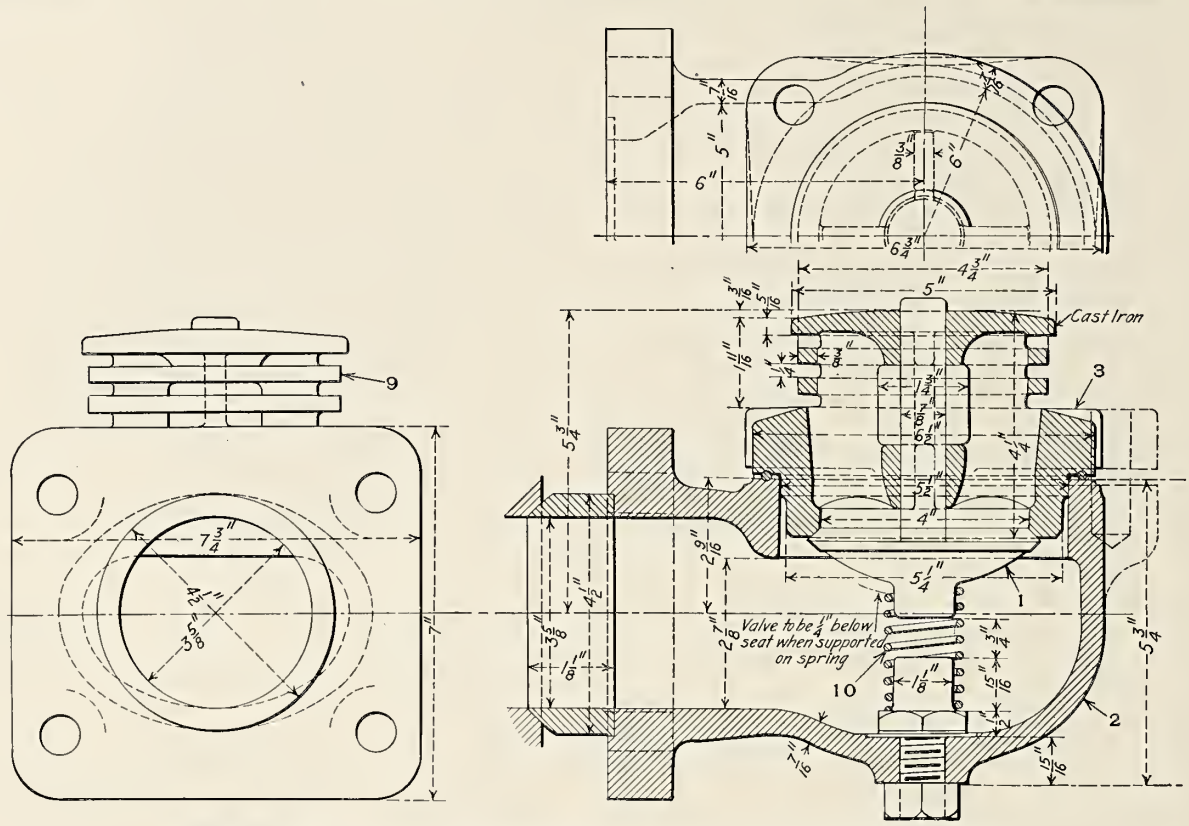

Fig. 633—Steam Chest Vacuum Valve; American Locomotive Company.

Numbers Refer to Names of Parts on Page 375.

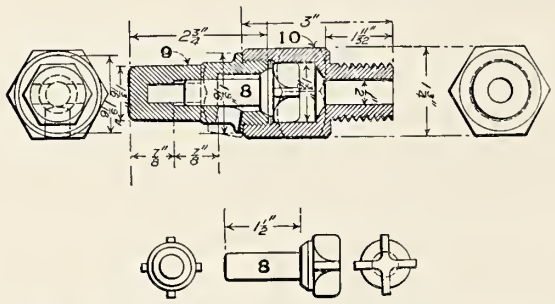

Fig. 634—Cylinder Cock; Pennsylvania Railroad.

Numbers Refer to Names of Parts on Page 359.

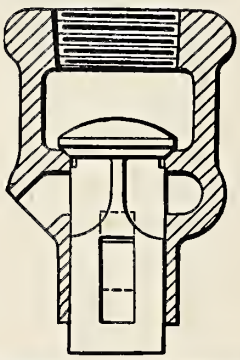

Fig. 635—Cylinder Cock; Nathan Mfg. Co.

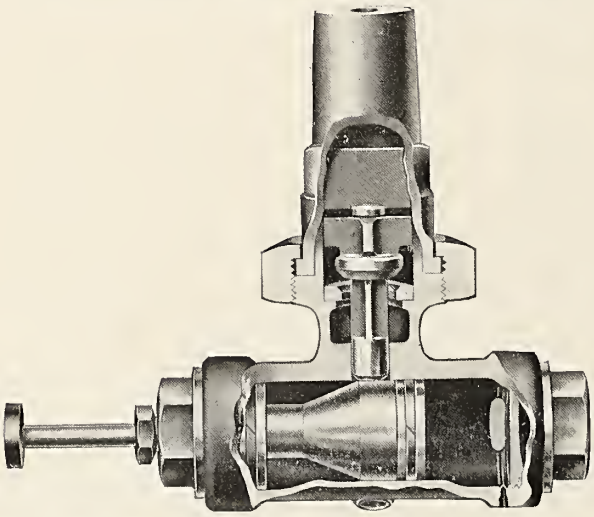

Fig. 636—Hancock Pneumatic Cylinder Cock; Hancock Inspirator Company.

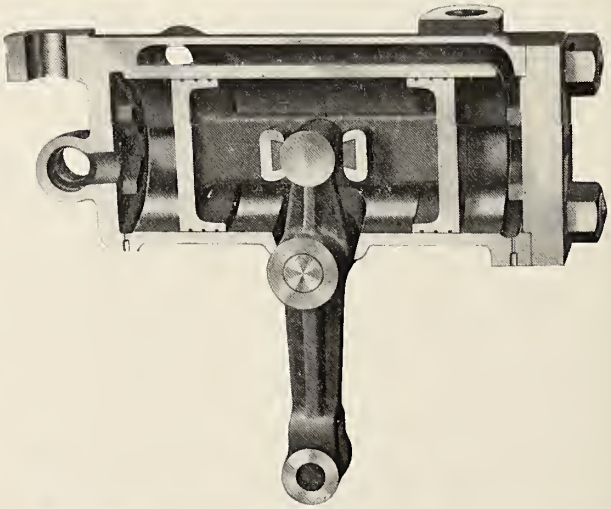

Fig. 637—Operating Cylinder for Pneumatic Cylinder Cocks. Usually Applied to the Bottom Crosshead Guide; Hancock Inspirator Co.

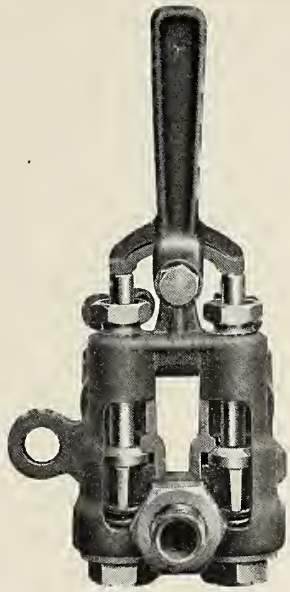

Fig 638—Hancock Operating Valve for Pneumatic Cylinder Cocks; Hancock Inspirator Company.

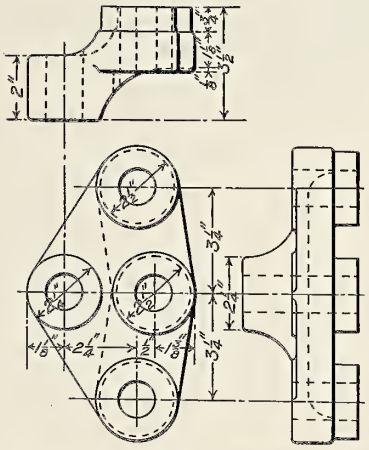

Fig. 639—Cylinder Cock Rigging Shaft Frame Bearing for Atlantic Type (4-4-2) Locomotive; Pennsylvania Railroad.

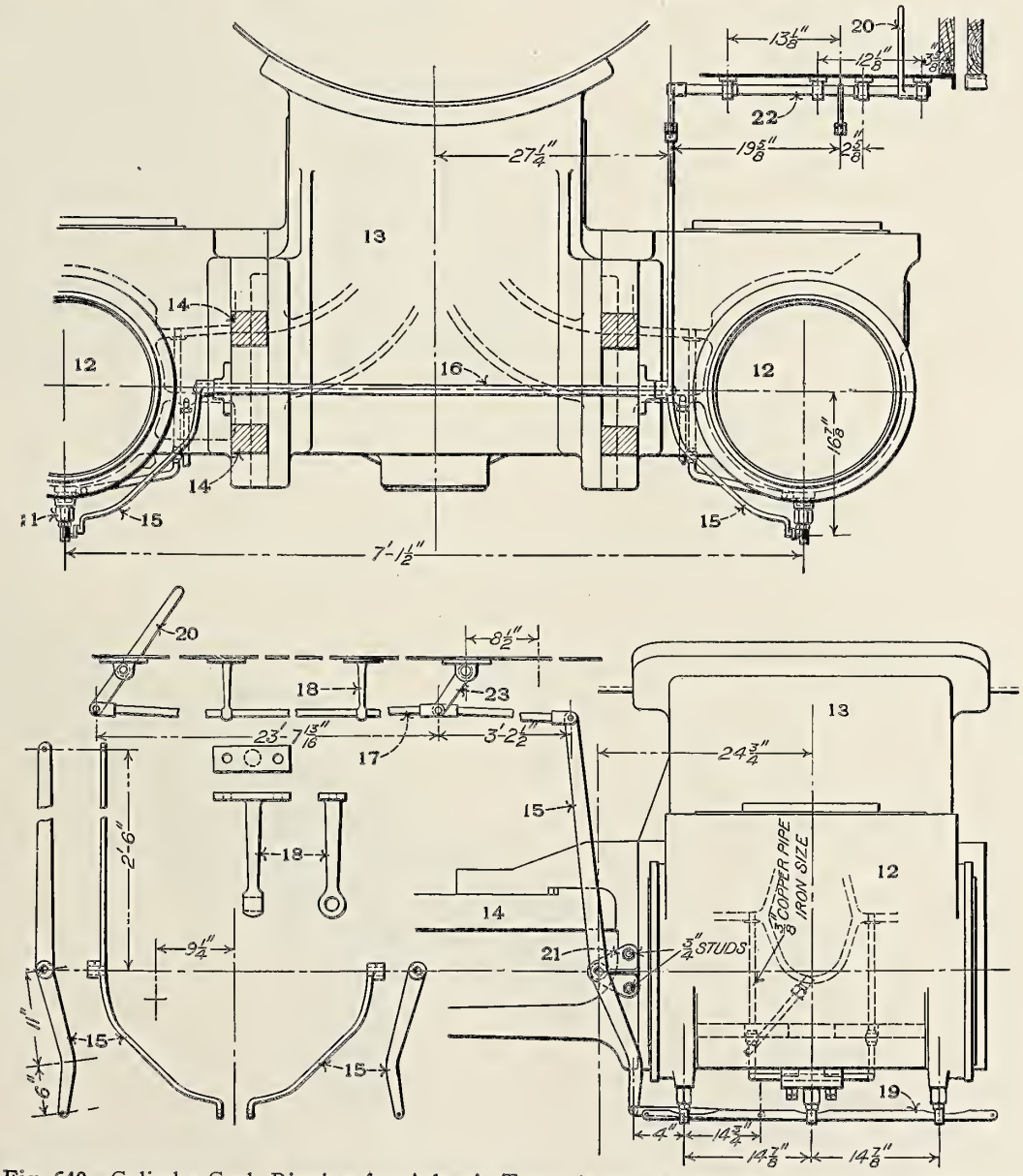

Fig. 640—Cylinder Cock Rigging for Atlantic Type (4-4-2) Locomotive; Pennsylvania Railroad.

Numbers Refer to Names of Parts on Page 359.

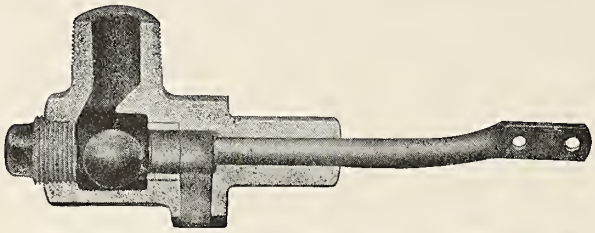

Fig. 641—Watertown Cylinder Cock; Watertown Specialty Company.

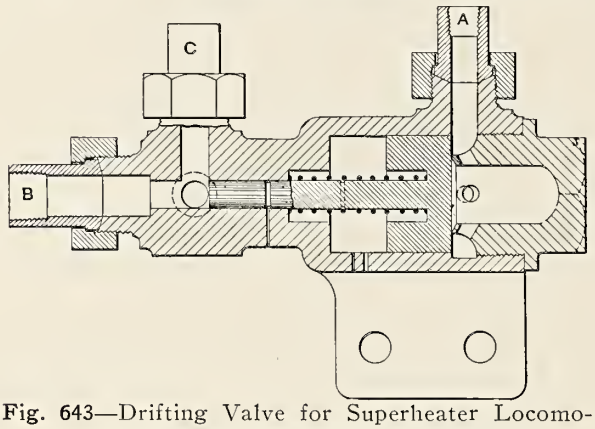

Fig. 643—Drifting Valve for Superheater Locomotives, Nathan Manufacturing Company.

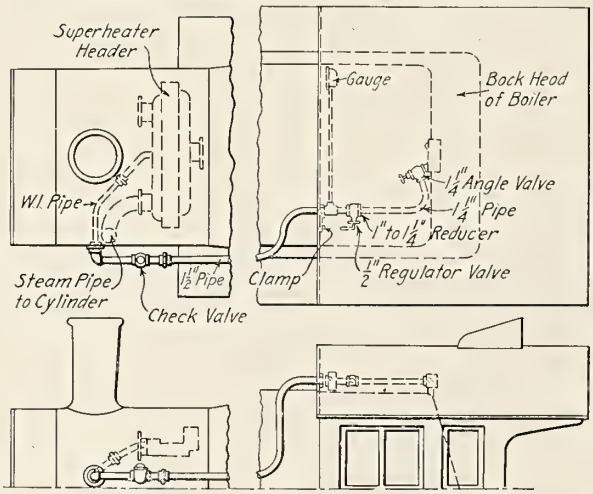

Fig. 644—Automatic Drifting Device; Delaware Railway Specialty Company.

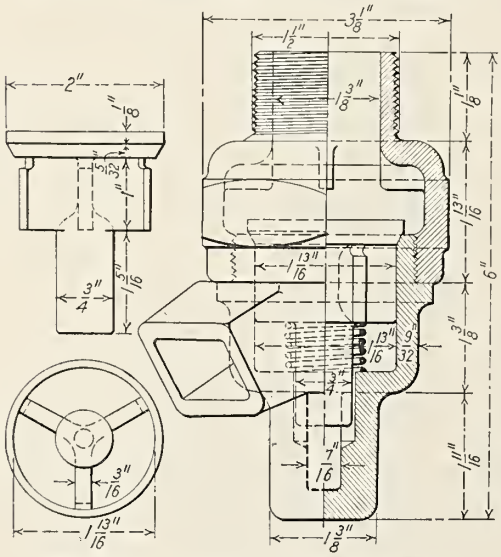

Fig. 646—Cylinder Cock; Baldwin Locomotive Works.

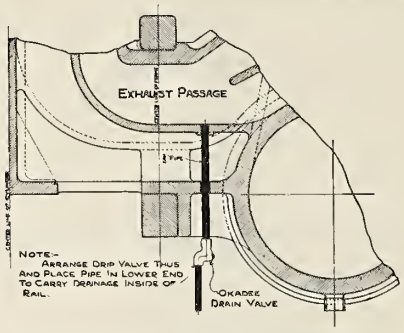

Fig. 642—Application of Okadee Drain Valve; The Okadee Company.

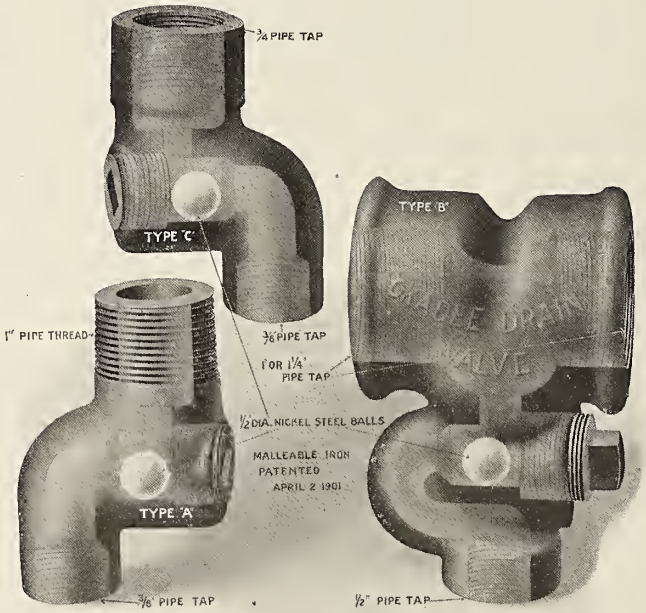

Fig. 645—Okadee Drain Valve; The Okadee Company.

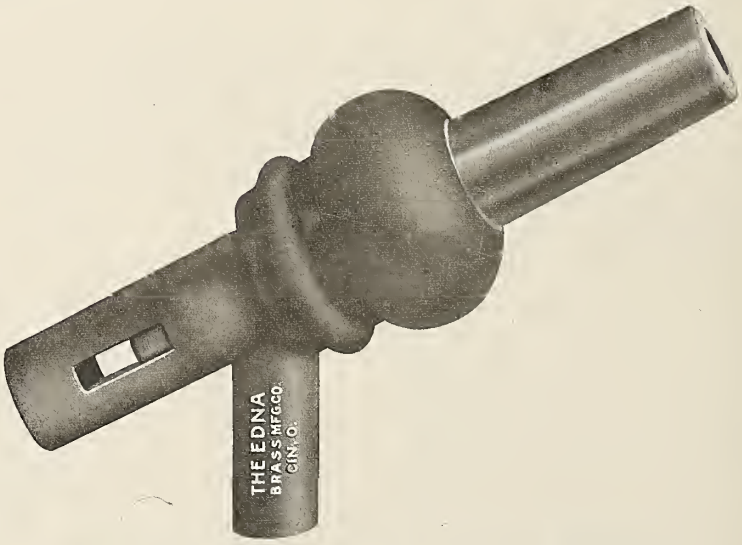

Fig. 647—Cylinder Cock; The Edna Brass Manufacturing Company.

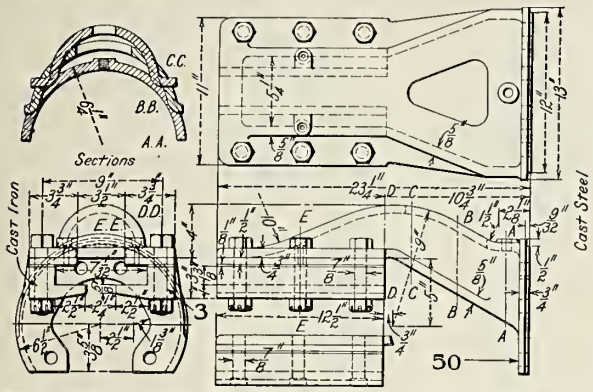

Fig. 648—Valve Stem Guide for Low Pressure Steam Chest on Mallet Articulated (2-6-6-2) Compound Locomotive. Built for the Norfolk & Western by the American Locomotive Company.

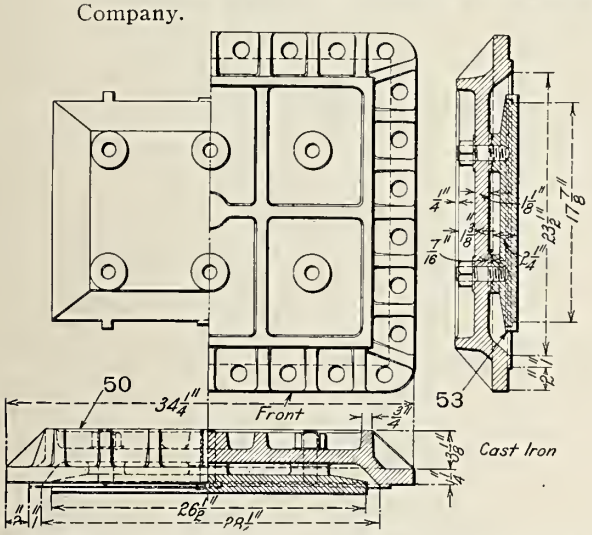

Fig. 650—Slide Valve Steam Chest Cover for Low Pressure Cylinders on Mallet Articulated (2-6-6-2) Compound Locomotive. Built for the Norfolk & Western by the American Locomotive Company.

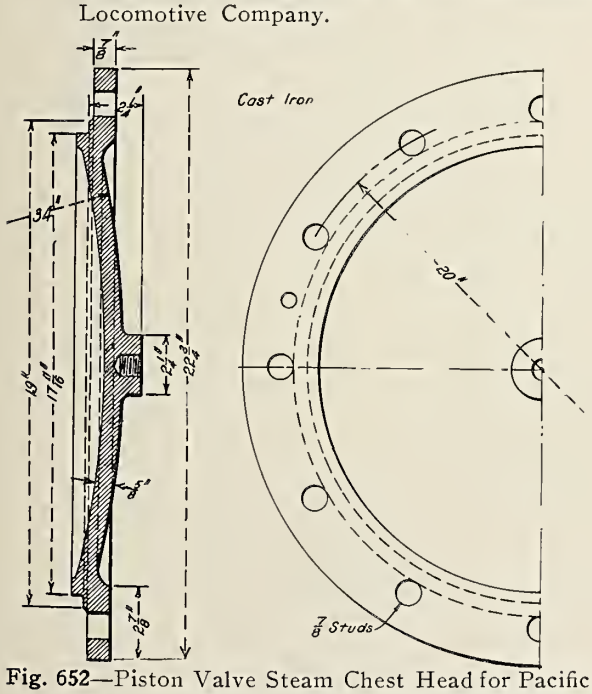

Fig. 652—Piston Valve Steam Chest Head for Pacific Type (4-6-2) Locomotive. Built for the Pennsylvania by the American Locomotive Company.

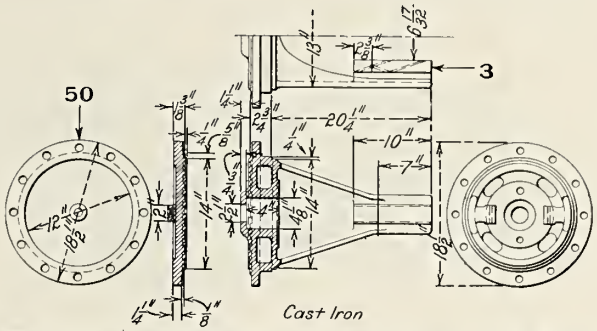

Fig. 649—Combined Piston Valve Steam Chest Head and Valve Stem Guide for Pacific Type (4-6-2) Locomotive. Built for the Nashville, Chattanooga & St. Louis by the Baldwin Locomotive Works.

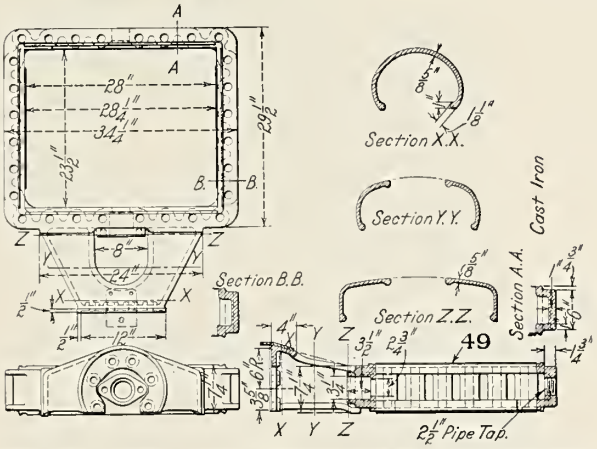

Fig. 651—Slide Valve Steam Chest for Low Pressure Cylinders on Mallet Articulated (2-6-6-2) Compound Locomotive. Built for the Norfolk & Western by the American Locomotive Company.

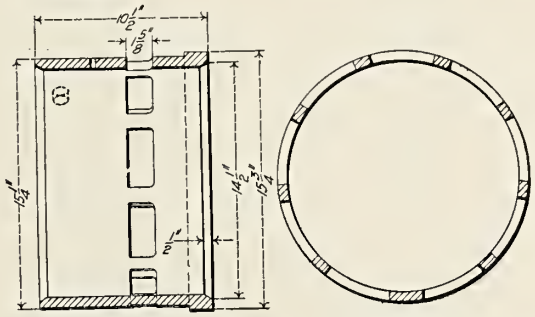

Fig. 653—Typical Piston Valve Steam Chest Bushing.

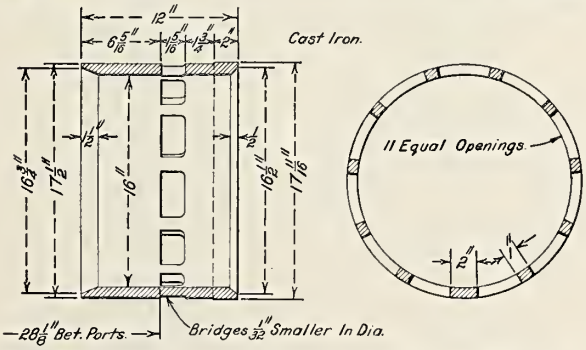

Fig. 654—Piston Valve Steam Chest Bushing for Pacific Type (4-6-2) Locomotive. Built for the Pennsylvania by the American Locomotive Company.

Numbers Refer to Names of Parts on Page 384.

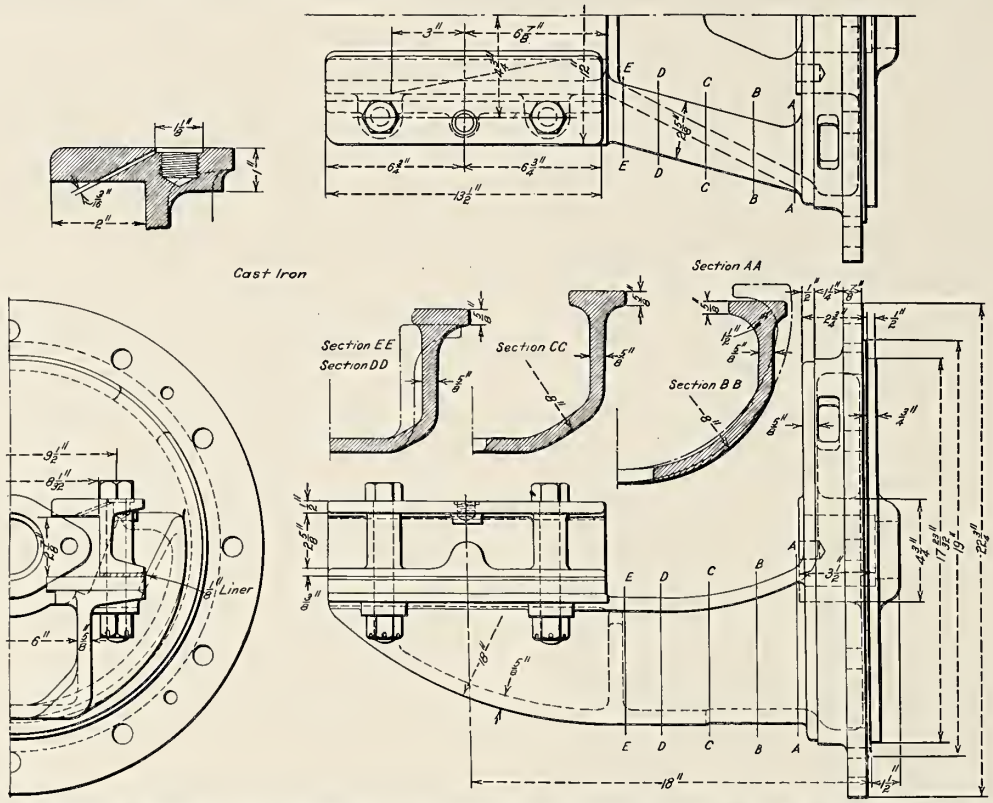

Fig. 655—Combined Piston Valve Steam Chest Head and Self-Centering Valve Stem Guide for Pacific Type (4-6-2) Locomotive. Built for the Pennsylvania by the American Locomotive Company.

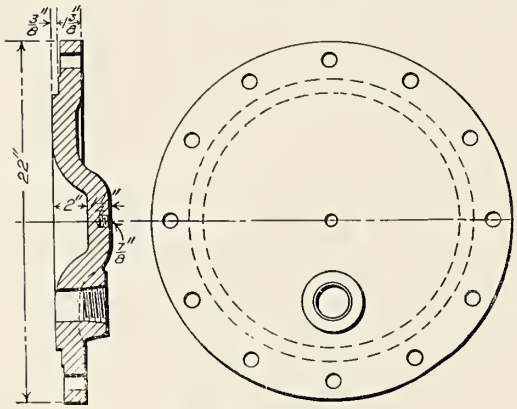

Fig. 656—Front Head.

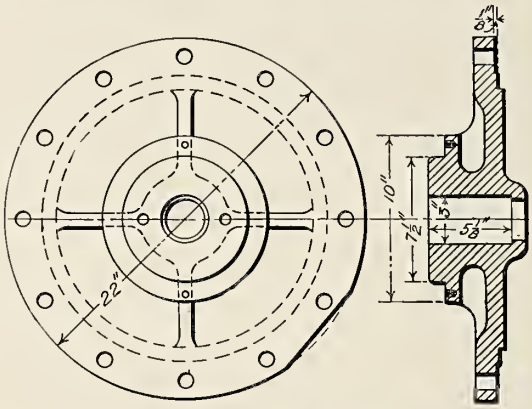

Fig. 657—Back Head.

Steam Chest Heads for Consolidation (2-8-0) Locomotive with Piston Valves; American Locomotive Company.

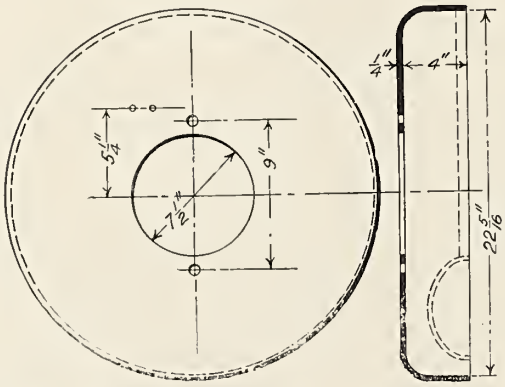

Fig. 658—Casing for Piston Valve Steam Chest Head for Consolidation (2-8-0) Locomotive; American Locomotive Company.

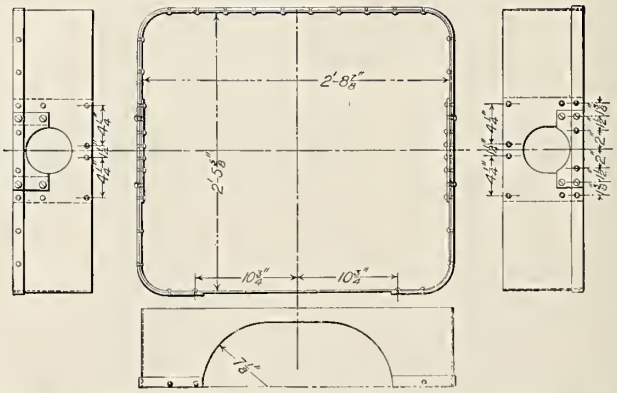

Fig. 659—Steam Chest Casing for Atlantic Type (4-4-2) Locomotive; Pennsylvania Railroad.

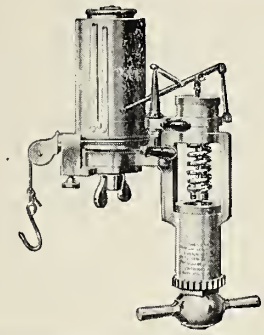

Fig. 660—American-Thompson Outside Spring Indicator; The American Steam Gauge & Valve Manufacturing Company.

Fig. 661—Typical Piston Valve Steam Chest Bushing for Four-Cylinder Balanced Compound Locomotive; Baldwin Locomotive Works.

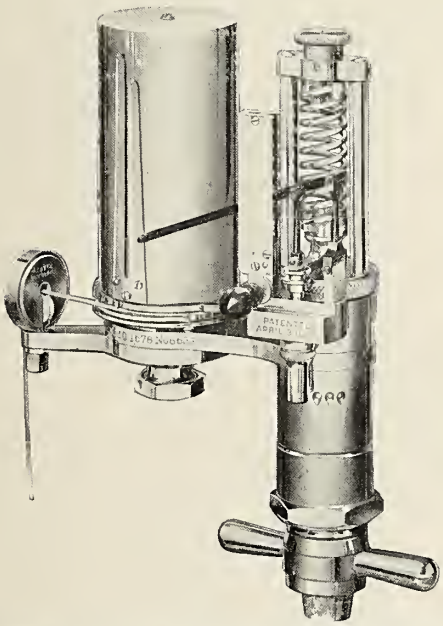

Fig. 662—Tabor Outside Spring Standard Indicator; The Ashcroft Manufacturing Company.

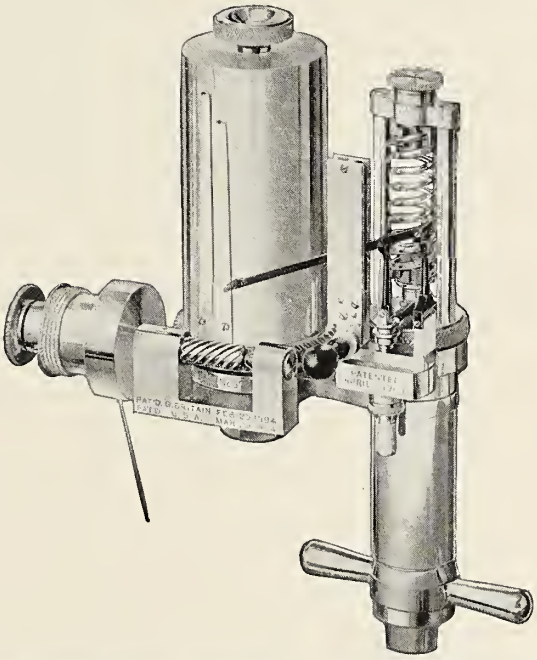

Fig. 663—Tabor Outside Spring Indicator with Houghtaling Reducing Motion; The Ashcroft Manufacturing Company.

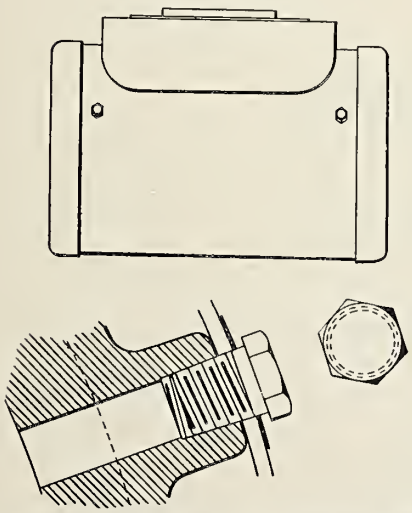

Fig. 664—Location and Detail of Cylinder Plugs for Indicator Connections; Pennsylvania Railroad.

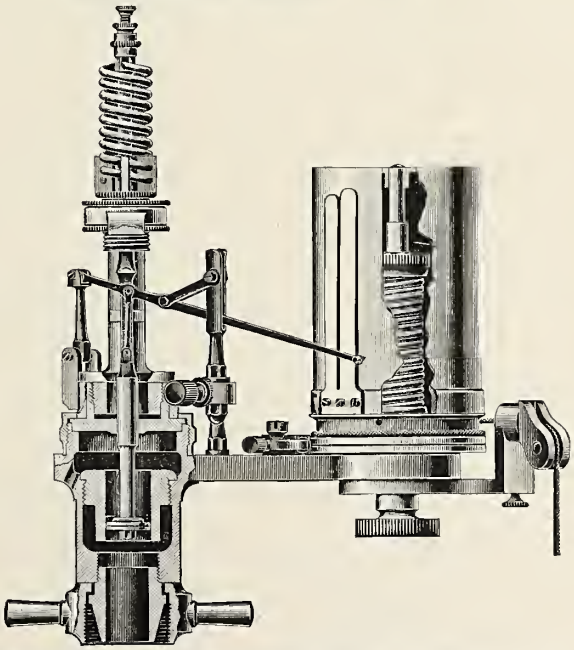

Fig. 665—Class "B" Outside Spring Indicator; Star Brass Manufacturing Company.

Names of Parts of Valves and Valve Motion, Figs. 648-761.

1 *Guide Block*
1a *Slide Valve*
2 *Valve Stem*
3 *Valve Stem Guide*
3a *Valve Stem Crosshead*
4 *Valve Stem Guide Bushing*
5 *Valve Stem Guide Oil Cup*
6 *Valve Stem Guide Bushing Set Screw*
7 *Link*
8 *Link Block*
9 *Eccentric*
10 *Eccentric Strap*
10a *Eccentric Strap Rod*
11 *Eccentric Rod*
11a *Eccentric Rod Seat*
12 *Reverse Shaft*
13 *Reverse Shaft Arm*
14 *Link Hanger*
15 *Reverse Shaft Counterbalance Arm*
16 *Reverse Shaft Counterbalance Connection*
17 *Reverse Shaft Counterbalance Rod*
17a *Reverse Shaft Counterbalance Spring*
18 *Transmission Bar*
19 *Transmission Bar Hanger*
20 *Lower Rocker Arm*
21 *Upper Rocker Arm*
21a *Rocker Bearing*
22 *Rocker Box*
23 *Frame*
24 *Driving Axle*
25 *Transmission Bar Hanger Bracket*
26 *Frame Brace*
27 *Reverse Shaft Bearing*
28 *Link Saddle*
29 *Link Saddle Pin*
29a *Link Trunnion*
30 *Transmission Bar Separator*
31 *Eccentric Rod Pin*
32 *Reverse Shaft Arm Pin*
33 *Rocker Shaft Pin*
34 *Transmission Bar Top Hanger Pin*
35 *Transmission Bar Bottom Hanger Pin*
36 *Valve Rod*
37 *Valve Stem Key*
39 *Valve Body*
39a *Valve Seat*
40 *Valve Packing Rings*
41a *Valve Balance Strip*
41b *Valve Balance Strip Groove*
42 *Reverse Shaft Lever*
43 *Scotch Yoke*
44 *Scotch Yoke Block*
45 *Valve Yoke*
47 *Valve Spider*
48 *Relief Hole*
49 *Steam Chest*
49a *Steam Chest Bushing*
50 *Steam Chest Cover or Head*
50a *Steam Chest Cover Bolt*
51 *Steam Chest Casing*
52 *Steam Chest Cover Gasket*
53 *Balance Plate*
54 *Steam Port*
55 *Exhaust Port*
56 *Bridge*
57 *Piston Valve Bull Ring*
58 *Valve Strip Balance Spring*

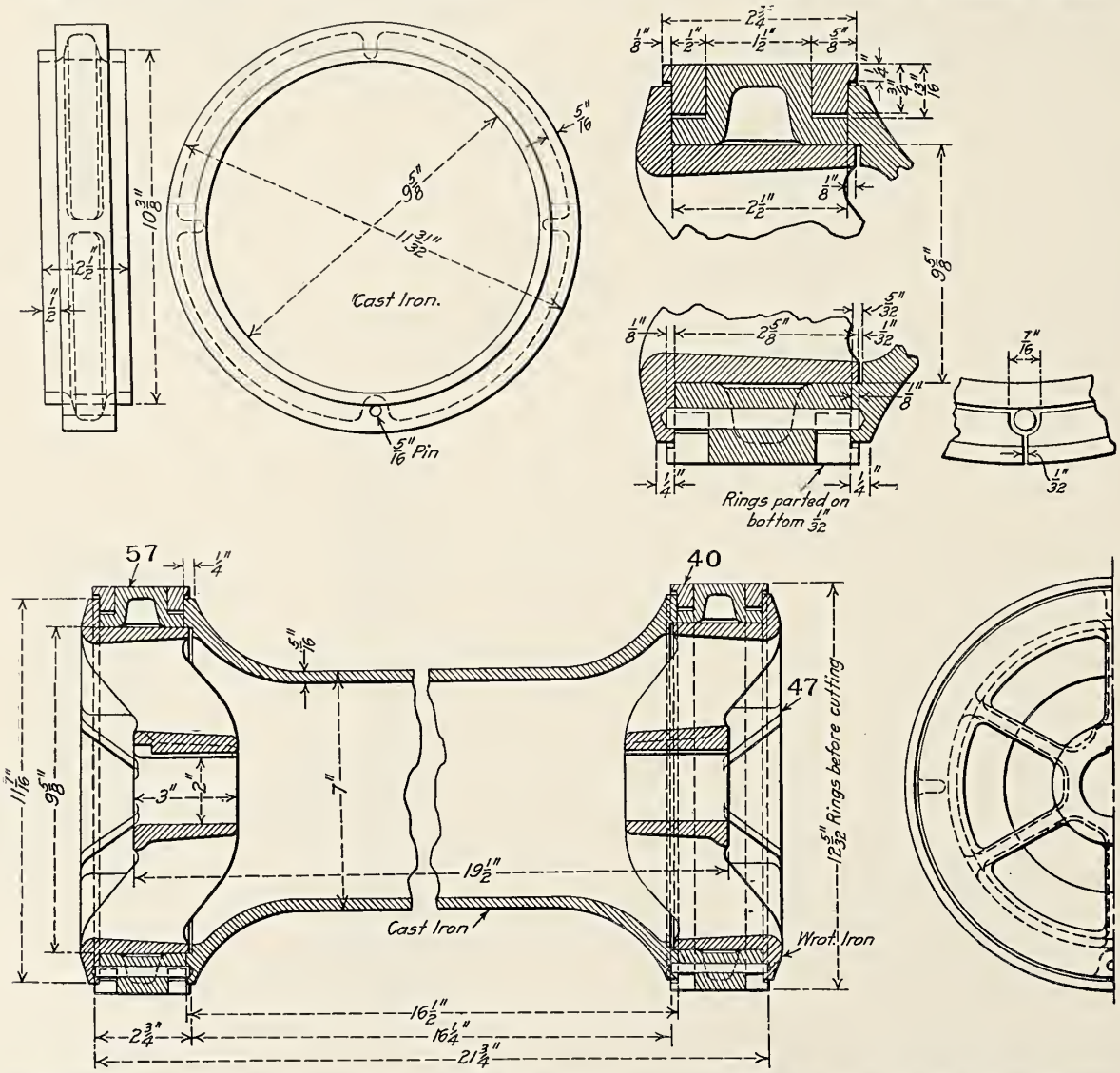

Fig. 666—Piston Valve for Mallet Articulated (0-6-6-0) Compound Locomotive. Built for the Kansas City Southern by the American Locomotive Company.

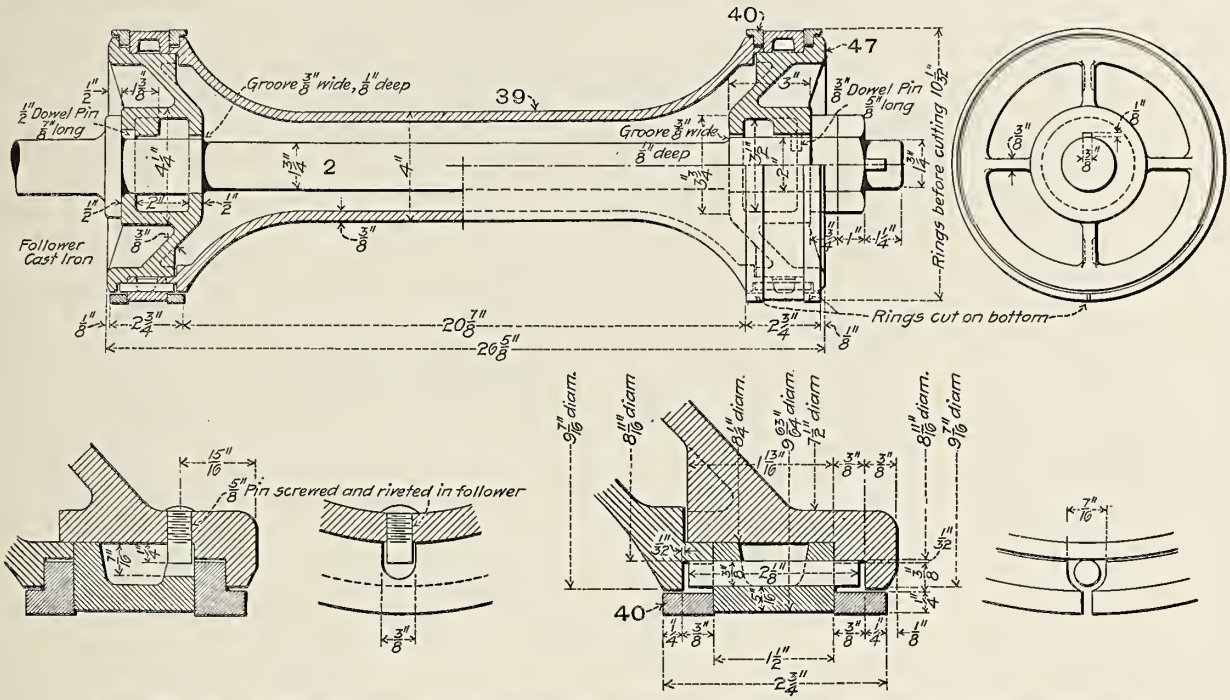

Fig. 667—Solid Piston Valve for Suburban Locomotive. New York Central & Hudson River.

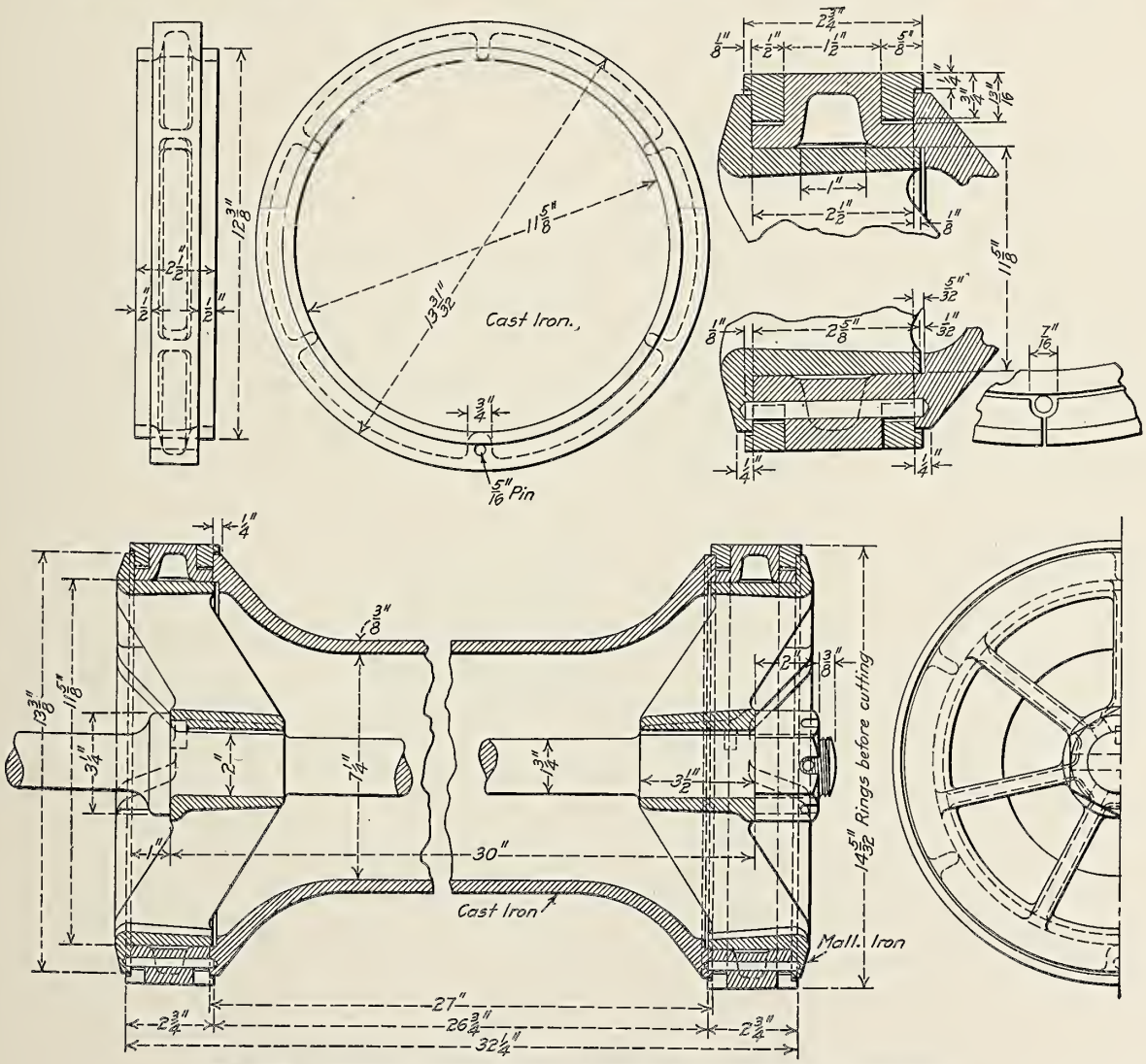

Fig. 668—Standard Piston Valve; American Locomotive Company.

Numbers Refer to Names of Parts on Page 384.

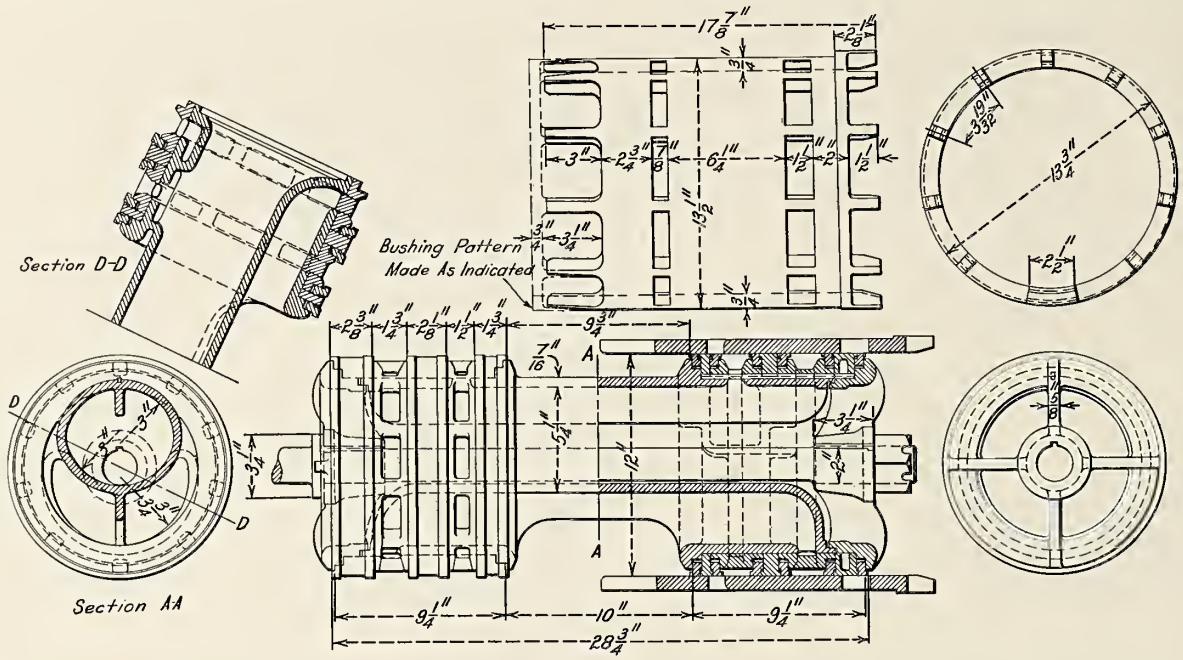

Fig. 669—Double Ported Piston Valve and Steam Chest Bushing; Baldwin Locomotive Works.

(*See Fig. 671 for details.*)

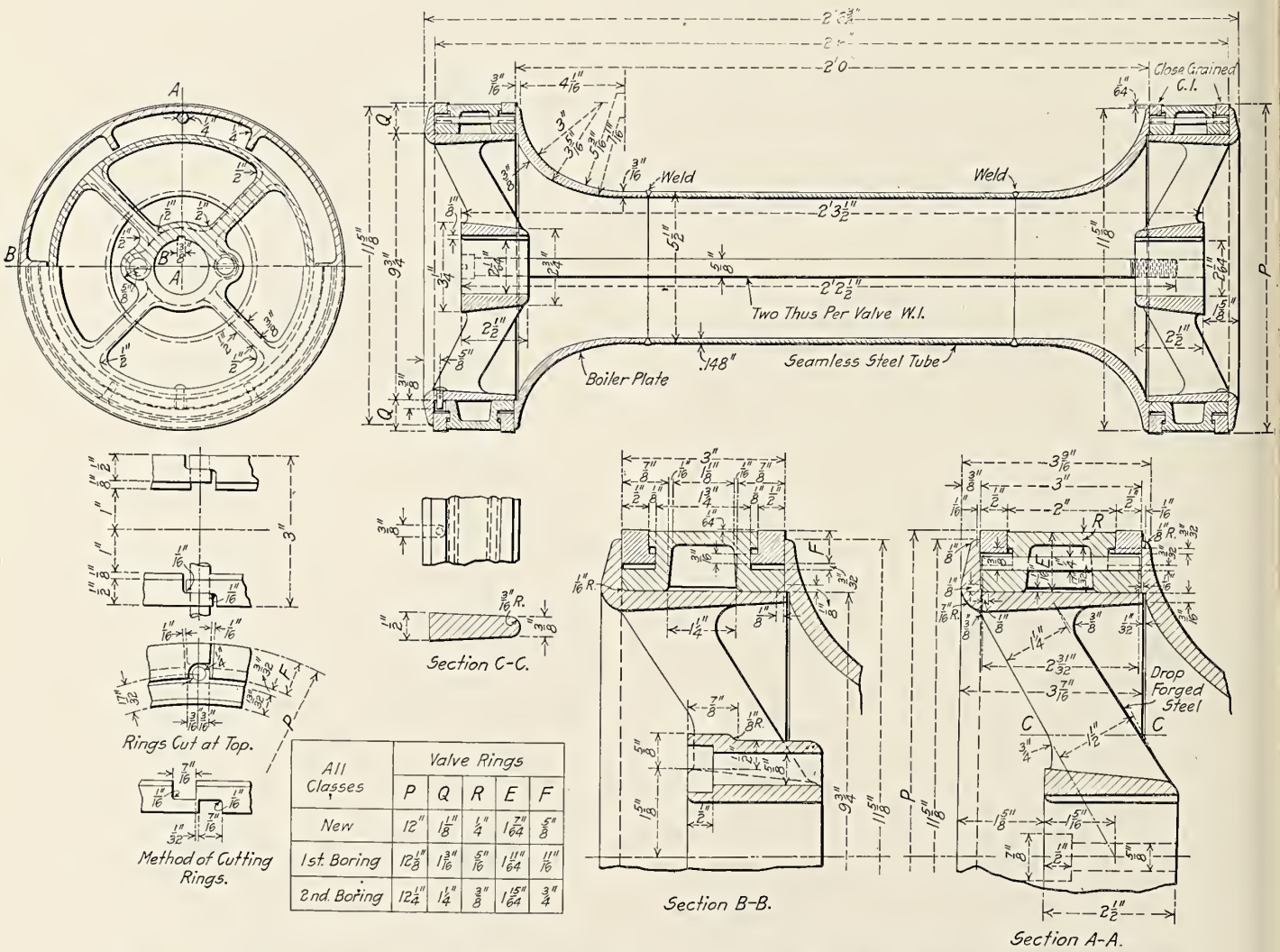

All Classes	Valve Rings				
	P	Q	R	E	F
New	12"	1 1/8"	1/4"	1 7/64"	5/8"
1st. Boring	12 1/8"	1 3/16"	5/16"	1 11/64"	11/16"
2nd. Boring	12 1/4"	1 1/4"	3/8"	1 15/64"	3/4"

Fig. 670—Piston Valve for Class E-6-s Atlantic Type (4-4-2) and Class K-4-s Pacific Type (4-6-2) Locomotives; Pennsylvania Railroad.

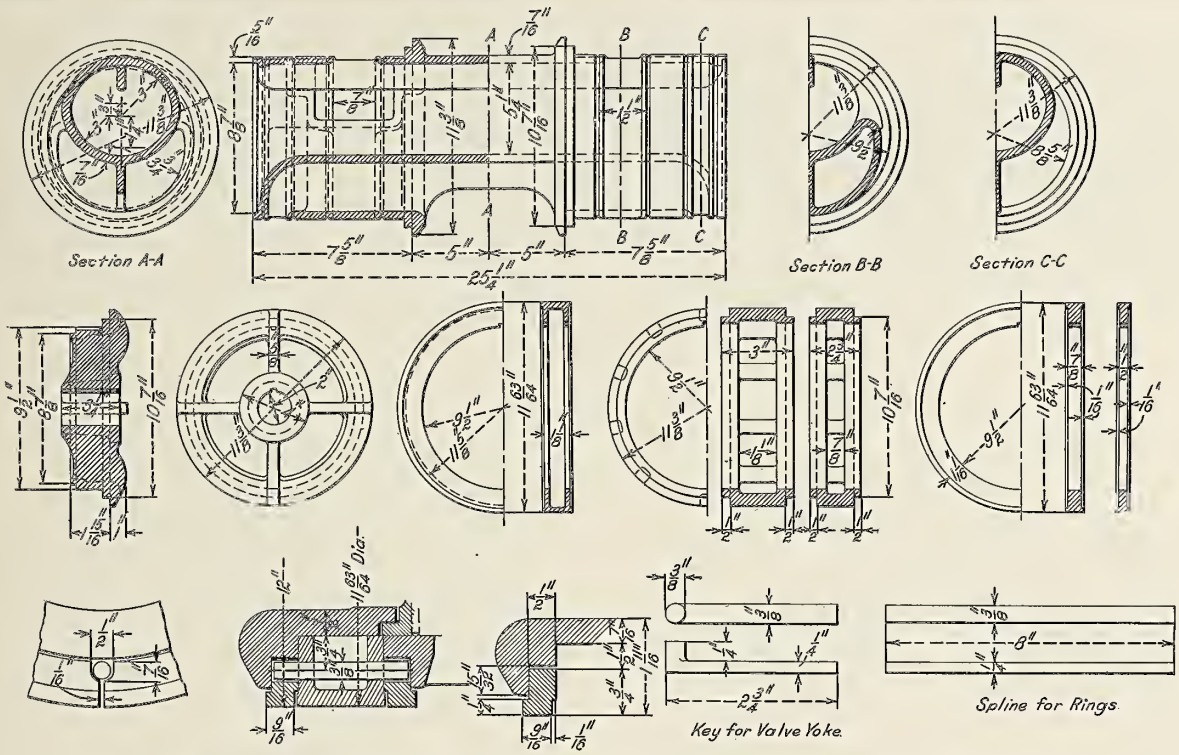

Fig. 671—Details of Double Ported Piston Valve; Baldwin Locomotive Works.

(See Fig. 669 for general drawing.)

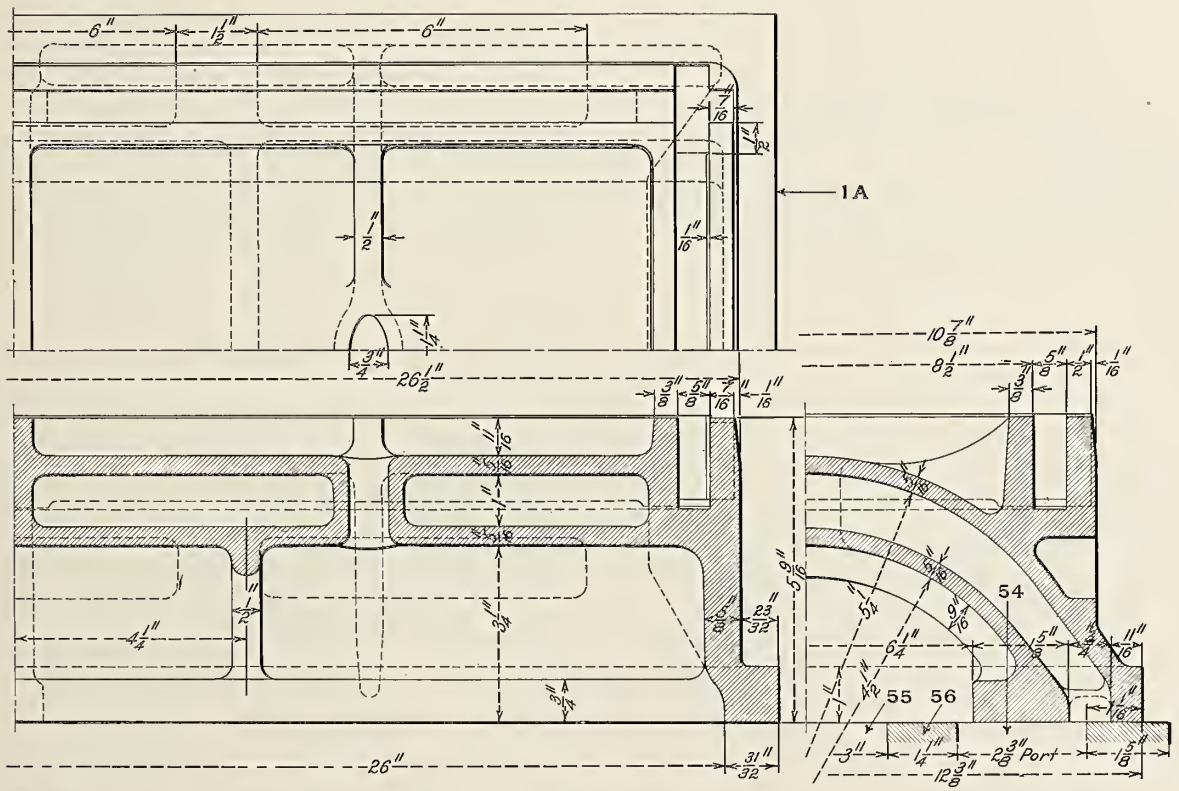

Fig. 672—Slide Valve for Low Pressure Cylinders of Mallet Articulated (2-6-6-2) Compound Locomotive. Built for the Norfolk & Western by the American Locomotive Company.

Numbers Refer to Names of Parts on Page 384.

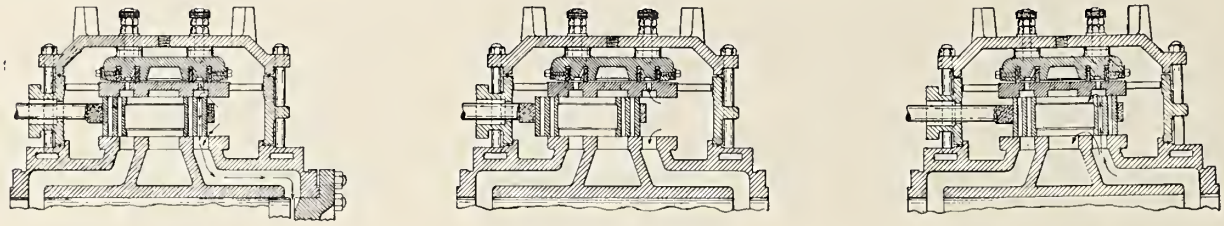

Opening Position. Wide Open Position. Exhaust Opening Position.

Fig. 673—Wilson High Pressure Balanced Slide Valve; American Balance Valve Company.

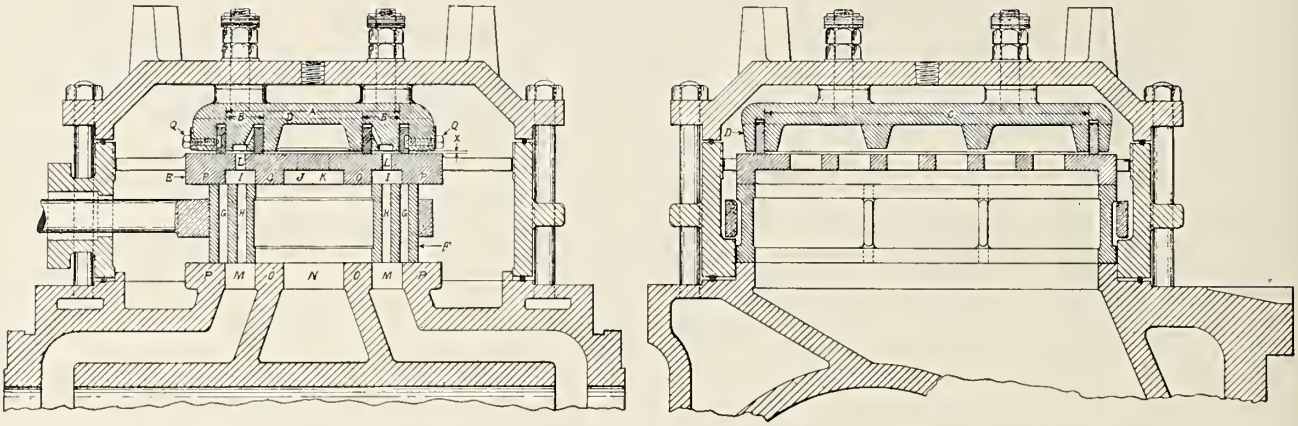

Fig. 674—J. T. Wilson High Pressure Balanced Slide Valve; American Balance Valve Company.

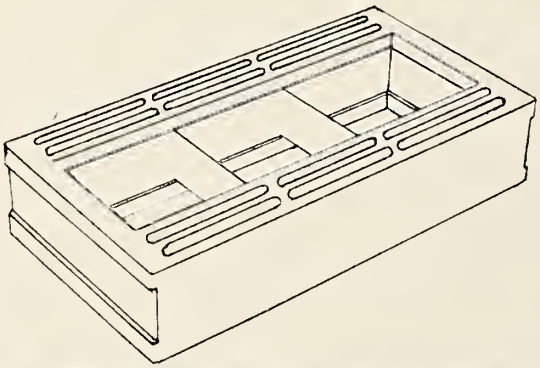

Fig. 675—Perspective View of the Wilson Valve Shown in Figs. 673-674; American Balance Valve Company.

Names of Parts of Figs. 674-676.

- **A** *Main Balancing Ring*
- **B** *Port Balancing Ring*
- **C** *Cone Plate for Rings* **A** *and* **B**
- **D** *Balance Plate*
- **E** *Main Valve*
- **F** *Double Admission Ports*
- **G** *Double Exhaust Ports*
- **H** *Pockets in Balancing Plate, Steam Ports*
- **I** *Pockets in Balancing Plate, Exhaust Ports*
- **J** *Steam Passage*
- **K** *Steam Passage*
- **L** *Steam Ports*
- **M** *Exhaust Ports*
- **N** *Bridge in Seat and Balancing Plate*
- **O** *Outer Edge of Valve Seat*

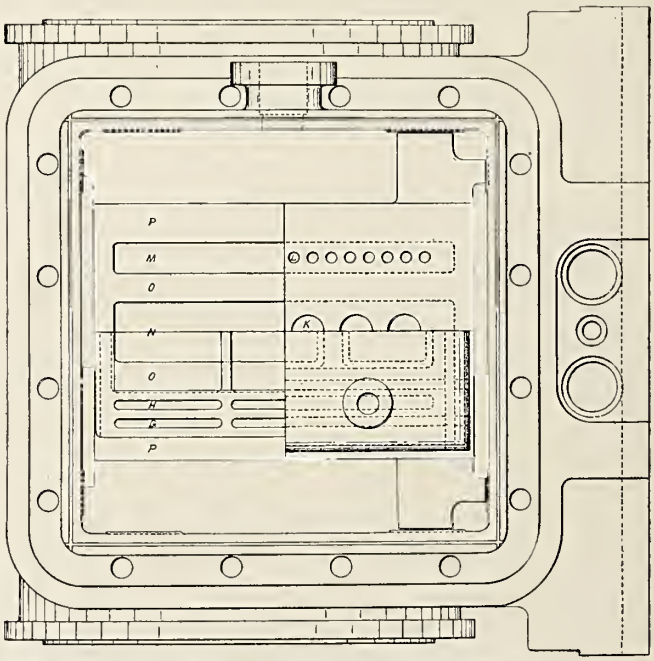

Fig. 676—High Pressure Balanced Slide Valve and Valve Seat with Chest in Position; American Balance Valve Company.

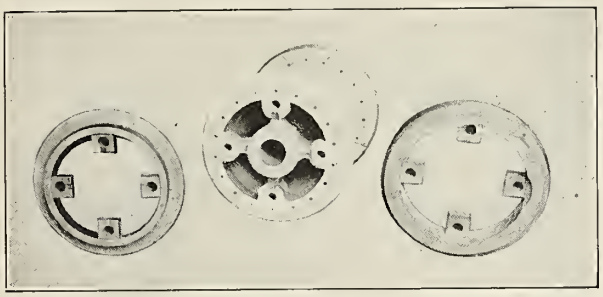

Fig. 677—Finished Spool and Followers for Piston Valve for Superheat.

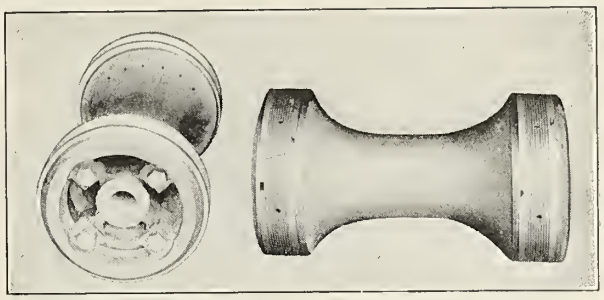

Fig. 678—Semi-Plug Piston Valve for Superheat.

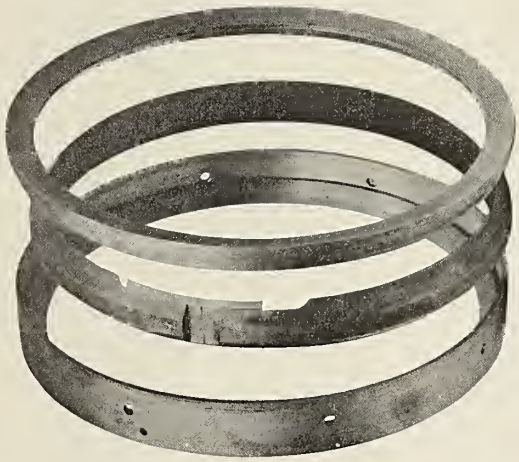

Fig. 679—Wall and Wedge Rings for Semi-Plug Piston Valve.

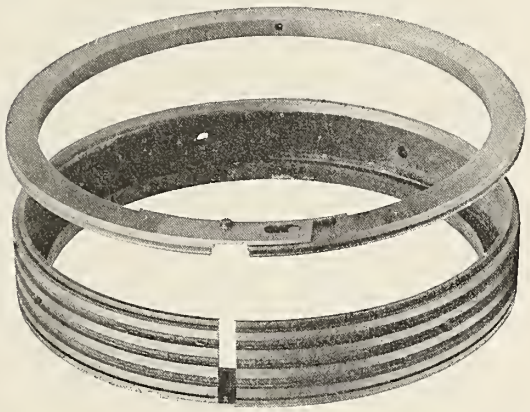

Fig. 680—Snap Rings for Semi-Plug Piston Valve.

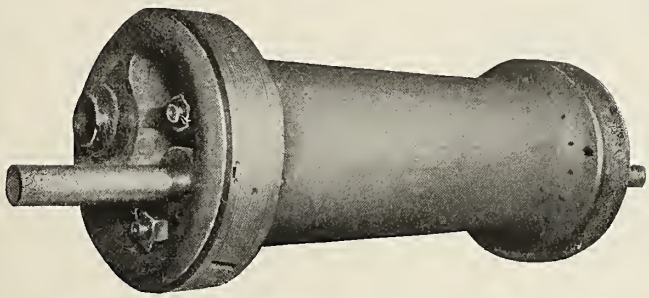

Fig. 681—Semi-Plug Piston Valve for Cylinders without Bridges in Steam Ports.

Fig. 682—Follower for Semi-Plug Piston Valve.

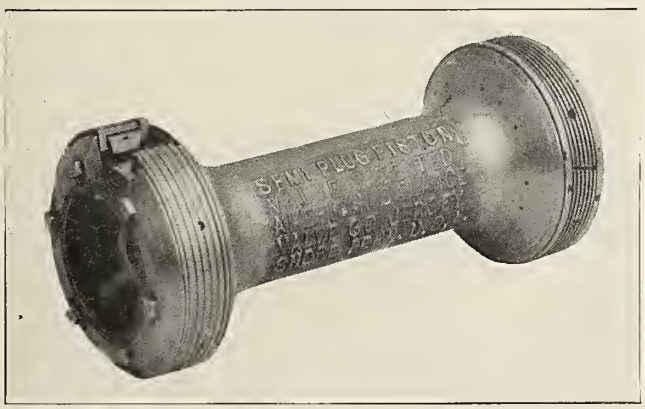

Fig. 683—Semi-Plug Piston Valve Showing the Packing Rings.

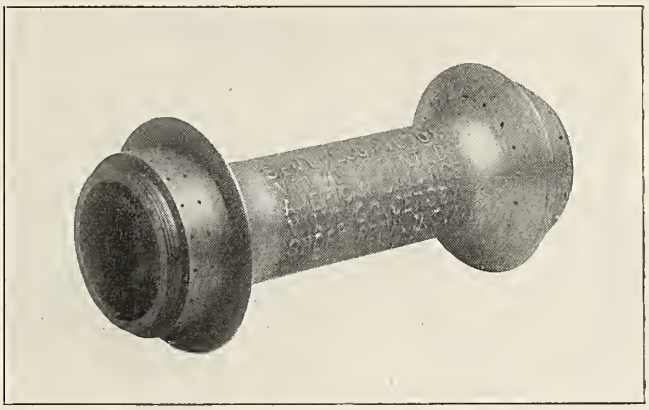

Fig. 684—Semi-Plug Piston Valve Spool.

American Balance Valve Company (Figs. 677-684.)

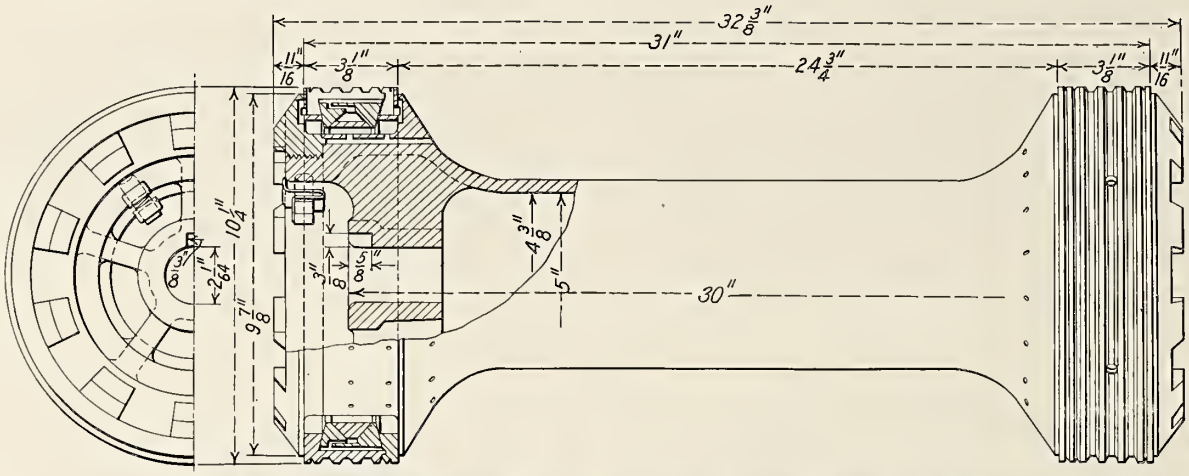

Fig. 685—Semi-Plug Piston Valve; American Balance Valve Company.

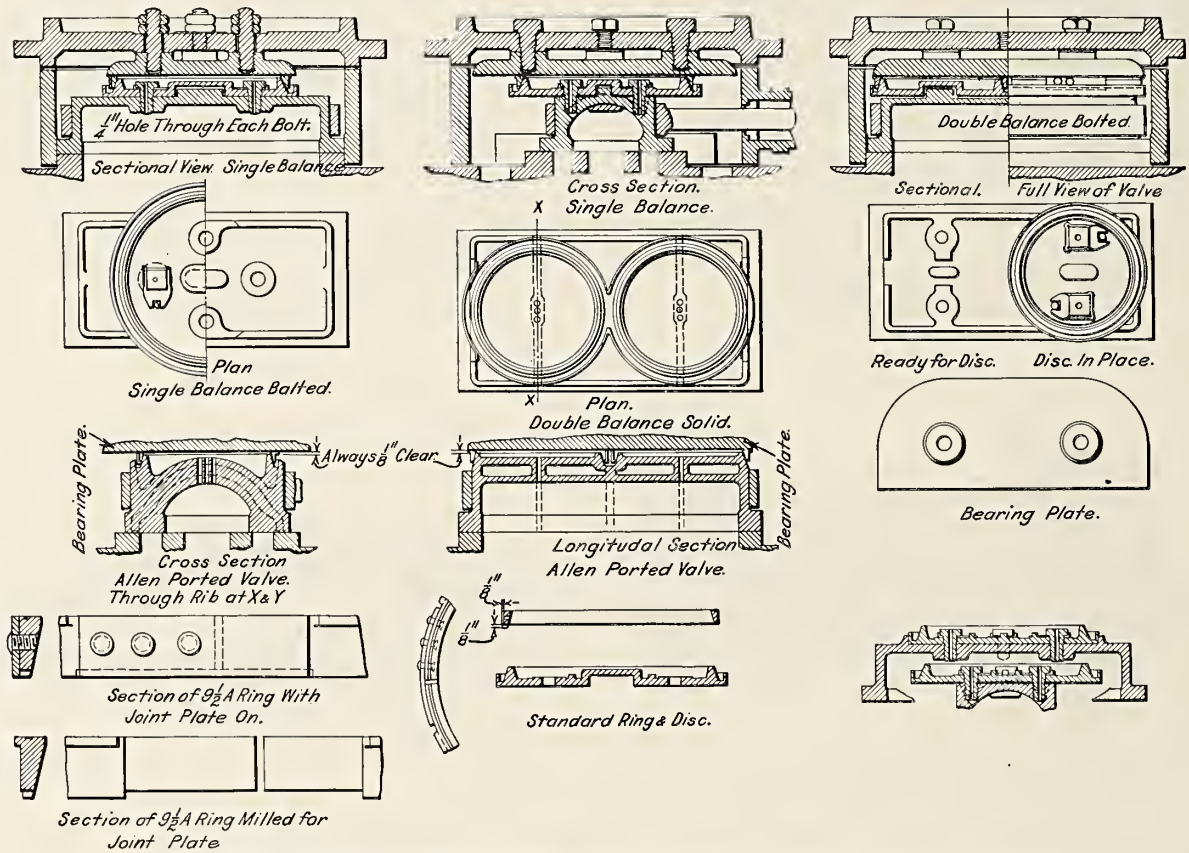

Fig. 686—American Balance Slide Valve; American Balance Valve Company.

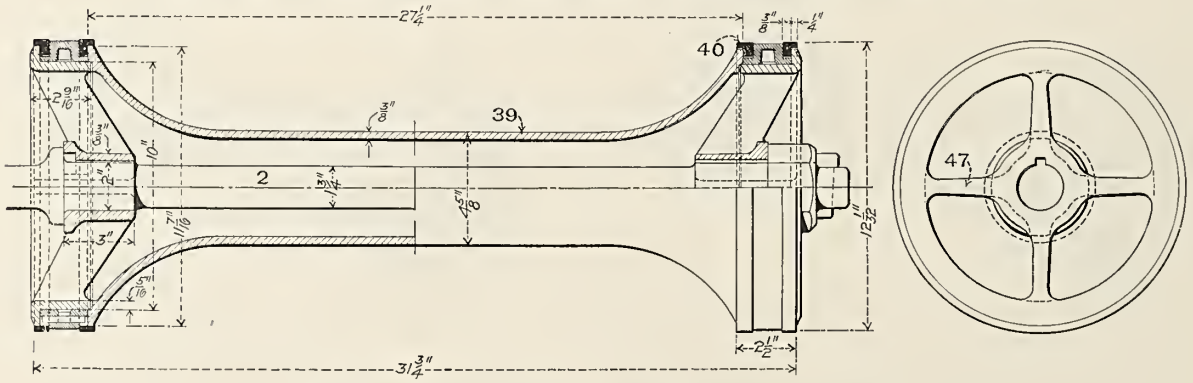

Fig. 687—Hollow Piston Valve; Northern Pacific.

Numbers Refer to Names of Parts on Page 384.

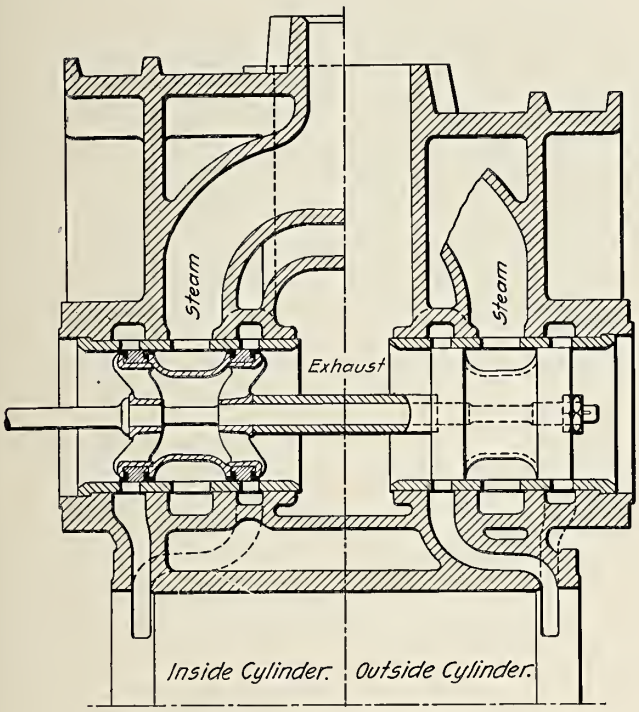

Fig. 688—Valve Arrangement for Atlantic Type (4-4-2) Four-Cylinder Balanced Simple Locomotive. Built for the Chicago, Rock Island & Pacific by the American Locomotive Company.

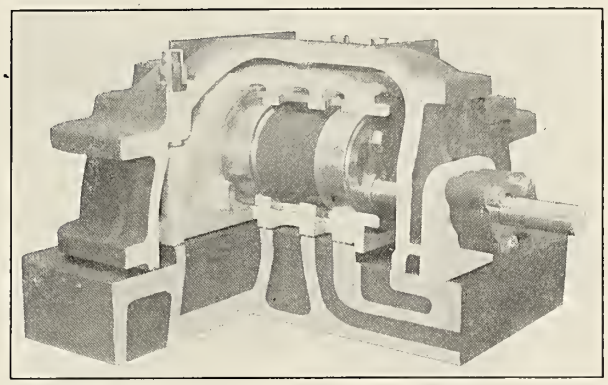

Fig. 689—Universal Piston Valve Applied to Slide Valve Seat; Economy Devices Corporation.

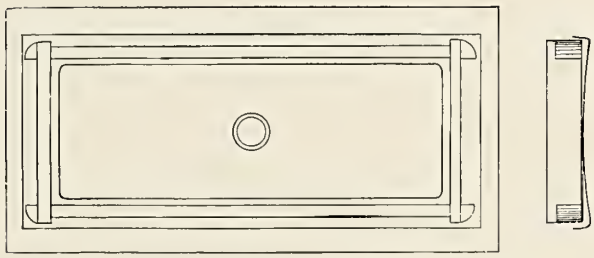

Fig. 690—Plan of Richardson Slide Valve; H. G. Hammett.

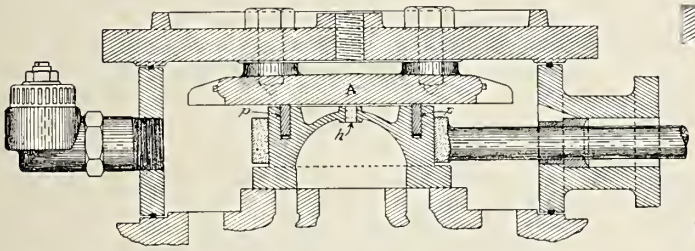

Fig. 691—Longitudinal Section of Richardson Balanced Slide Valve; H. G. Hammett.

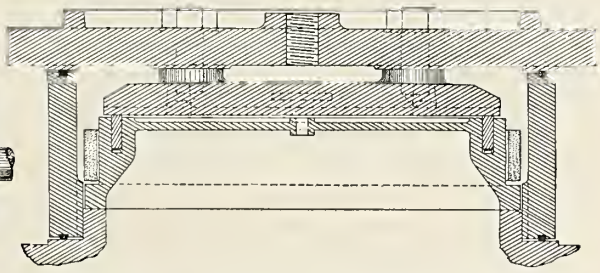

Fig 692—Cross Section of Richardson Balanced Slide Valve; H. G. Hammett.

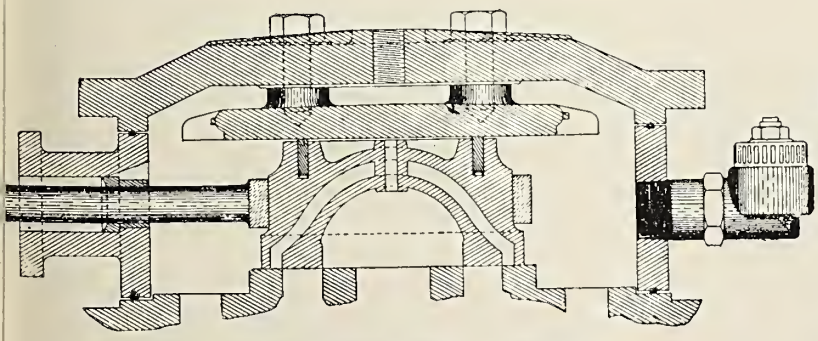

Fig. 693—Longitudinal Section of Allen-Richardson Balanced Slide Valve; H. G. Hammett.

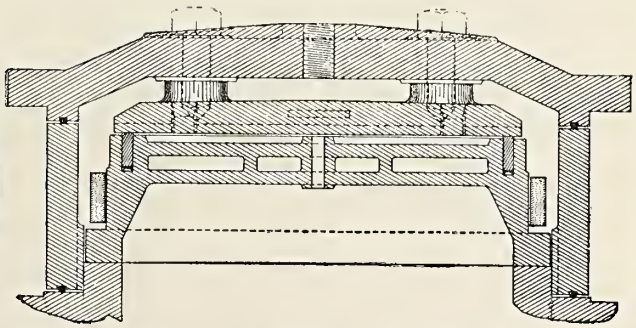

Fig. 694—Cross Section of Allen-Richardson Balanced Slide Valve; H. G. Hammett.

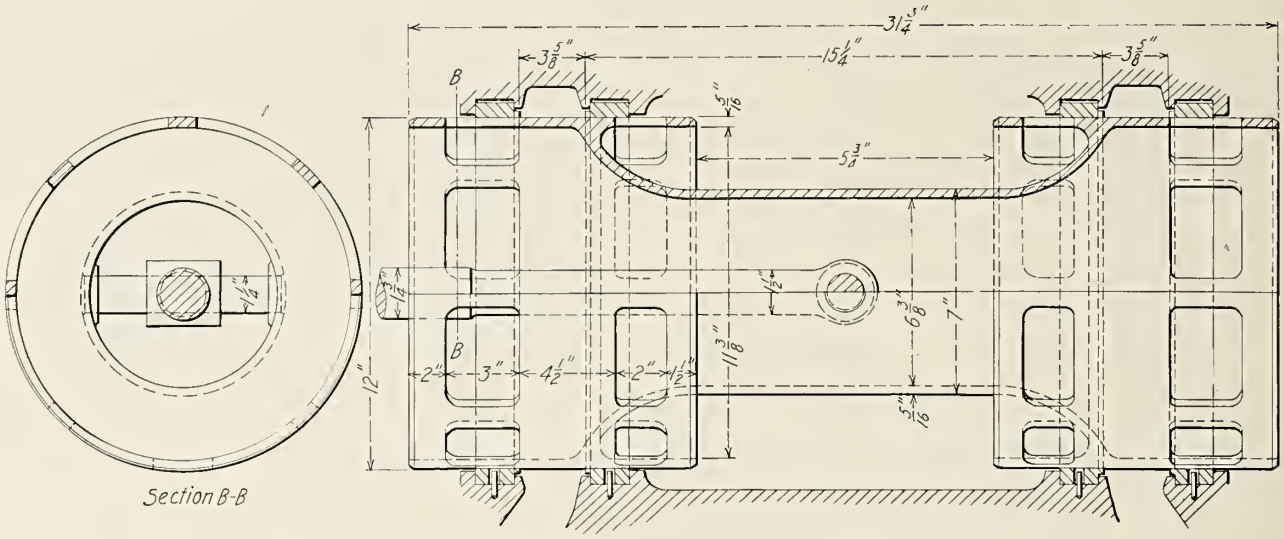

Fig. 695—Young Piston Valve; Pyle-National Electric Headlight Company.

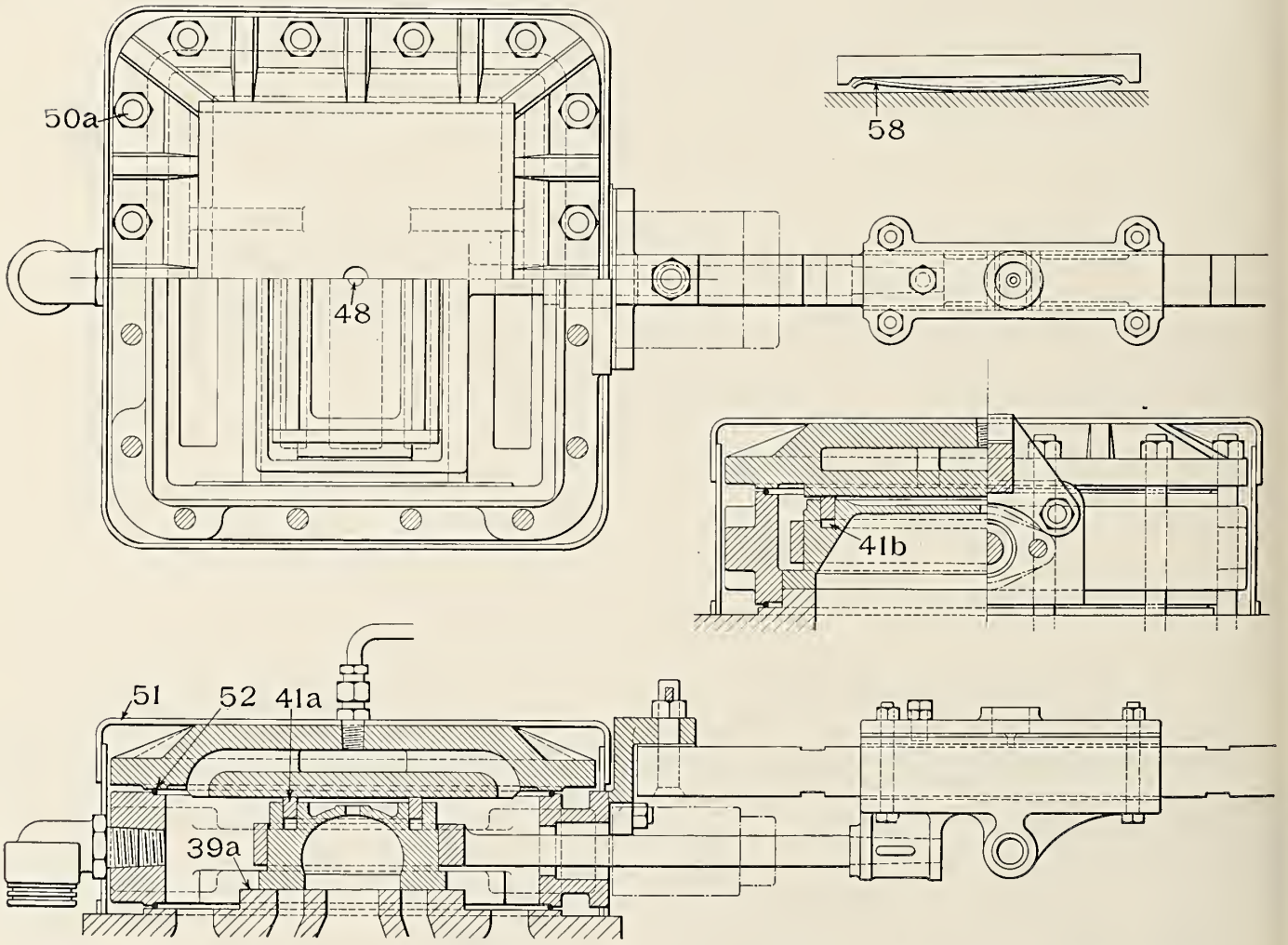

Fig. 696—Arrangement of Balanced Slide Valve for Walschaert Valve Gear; Baldwin Locomotive Works.

Numbers Refer to Names of Parts on Page 384.

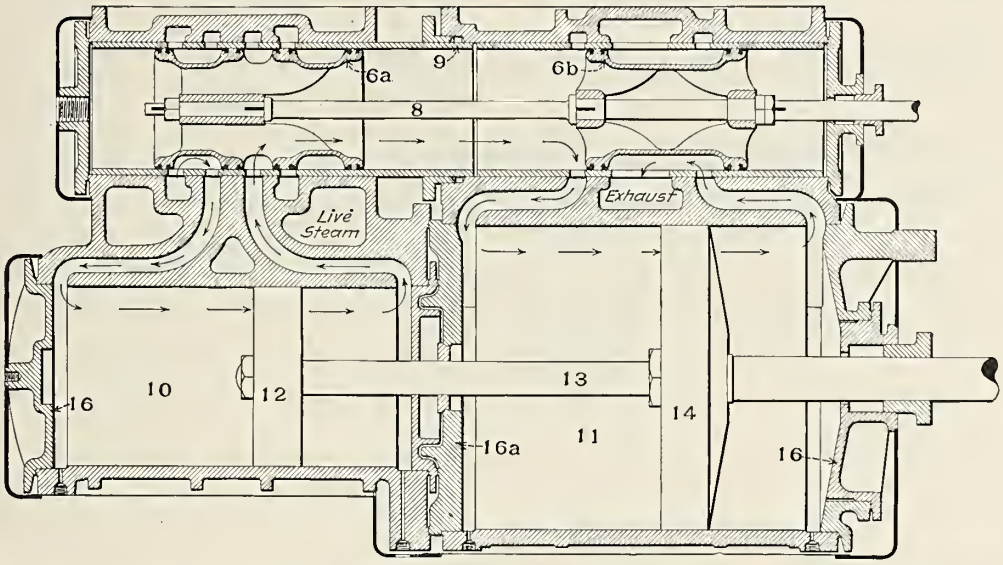

Fig. 697—Arrangement of Cylinders and Valves of Baldwin Tandem Compound Locomotive; Baldwin Locomotive Works.

Numbers Refer to Names of Parts on Page 395

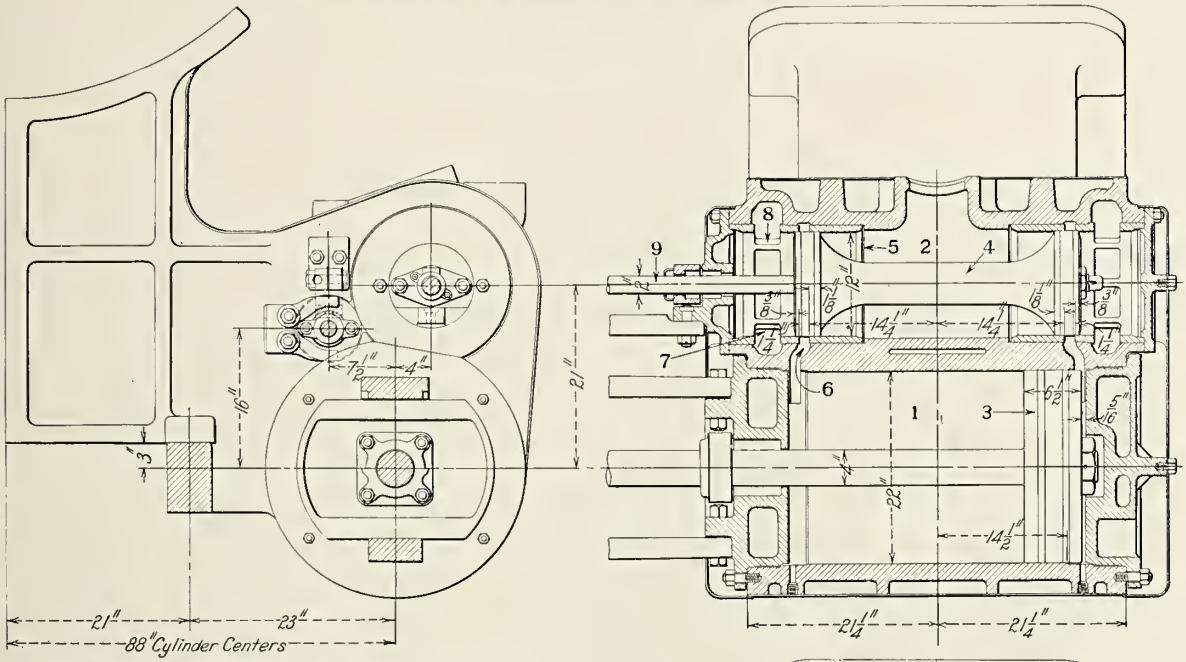

Fig. 698—Hobart-Alfree 22 in. x 26 in. Cylinders and Valves; Hobart-Alfree Company.

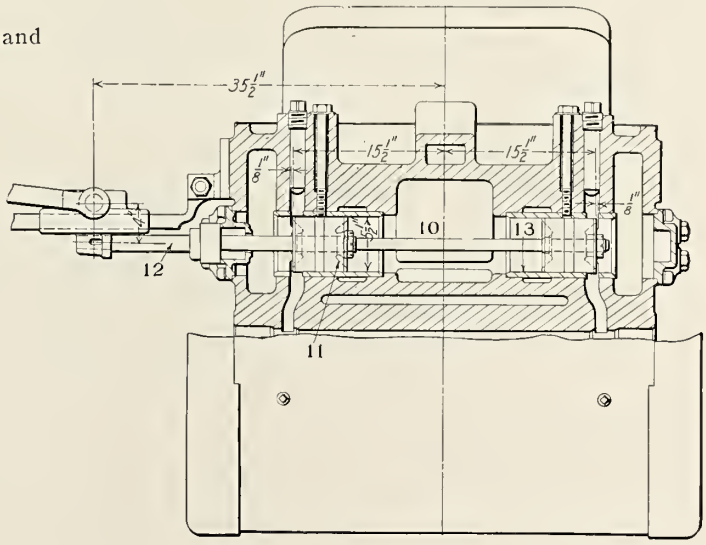

Names of Parts of Hobart-Alfree Valves and Cylinder, Fig. 698.

1 *Cylinder*
2 *Steam Chest*
3 *Piston*
4 *Piston Valve*
5 *Steam Chest Bushing*
6 *Steam Port*
7 *Exhaust Port*
8 *Bridge*
9 *Piston Valve Rod*
10 *Compression Valve Chamber*
11 *Compression Valve*
12 *Compression Valve Rod*
13 *Compression Valve Chamber Bushing*

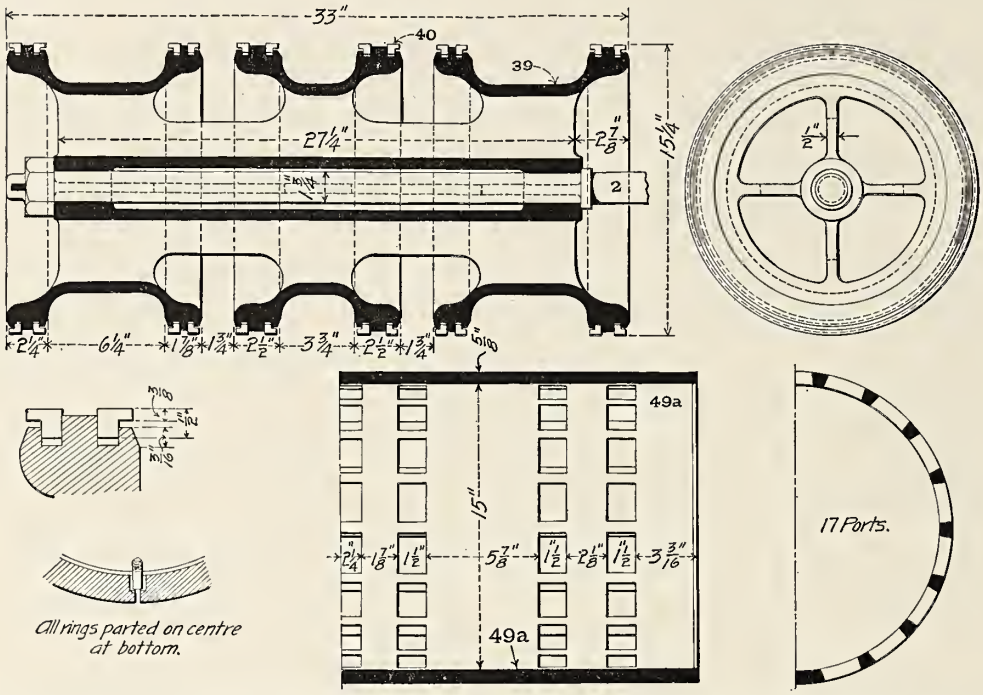

Fig. 699—Piston Valve and Steam Chest Bushing for Atlantic Type (4-4-2) Four-Cylinder Balanced Compound Locomotive. Built for the Atchison, Topeka & Santa Fe by the Baldwin Locomotive Works.

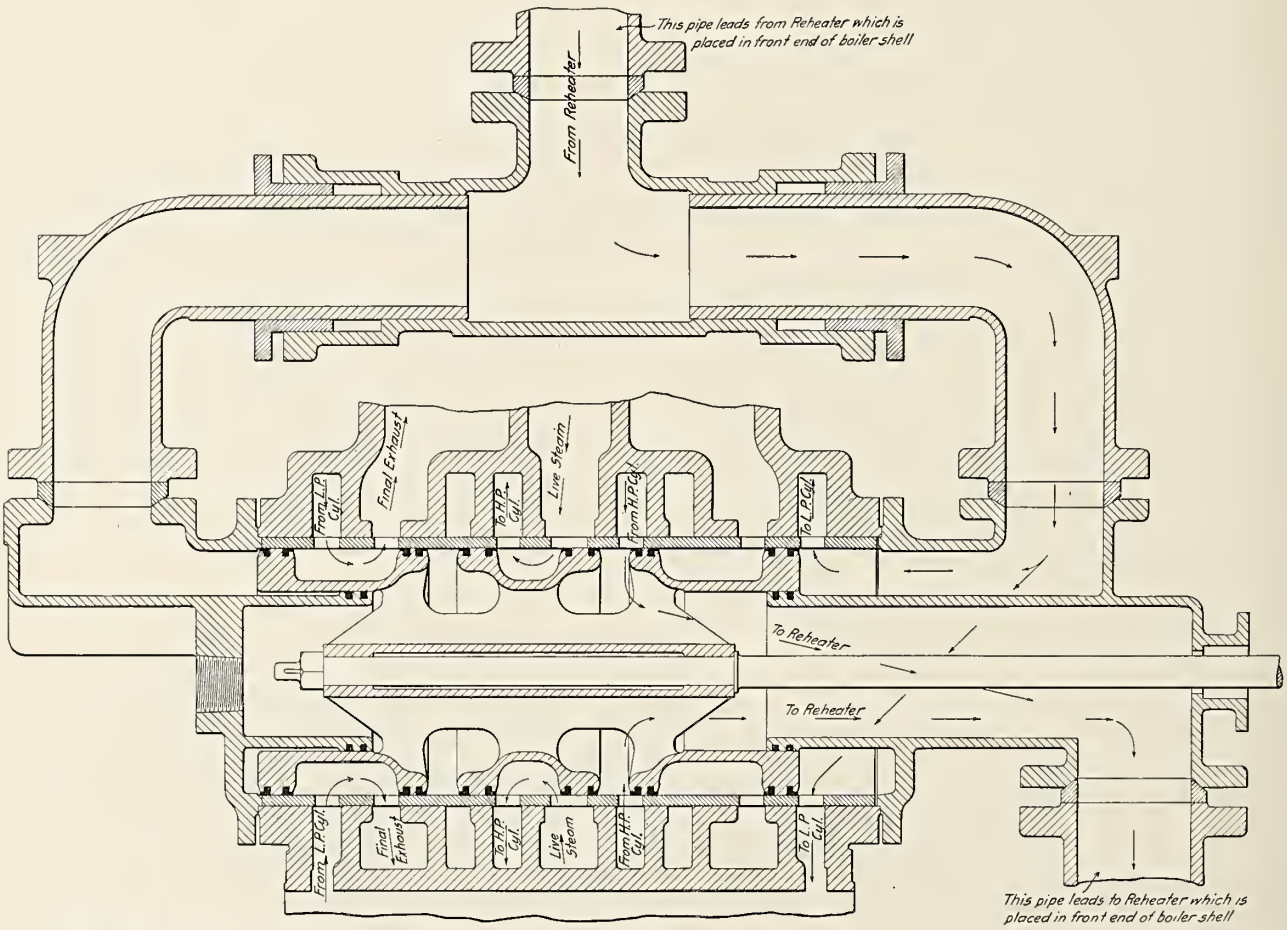

Fig. 700—Section Through Steam Chest of Atlantic Type (4-4-2) Four-Cylinder Balanced Compound Locomotive. Built for the Atchison, Topeka & Santa Fe by the Baldwin Locomotive Works.

Numbers Refer to Names of Parts on Page 384.

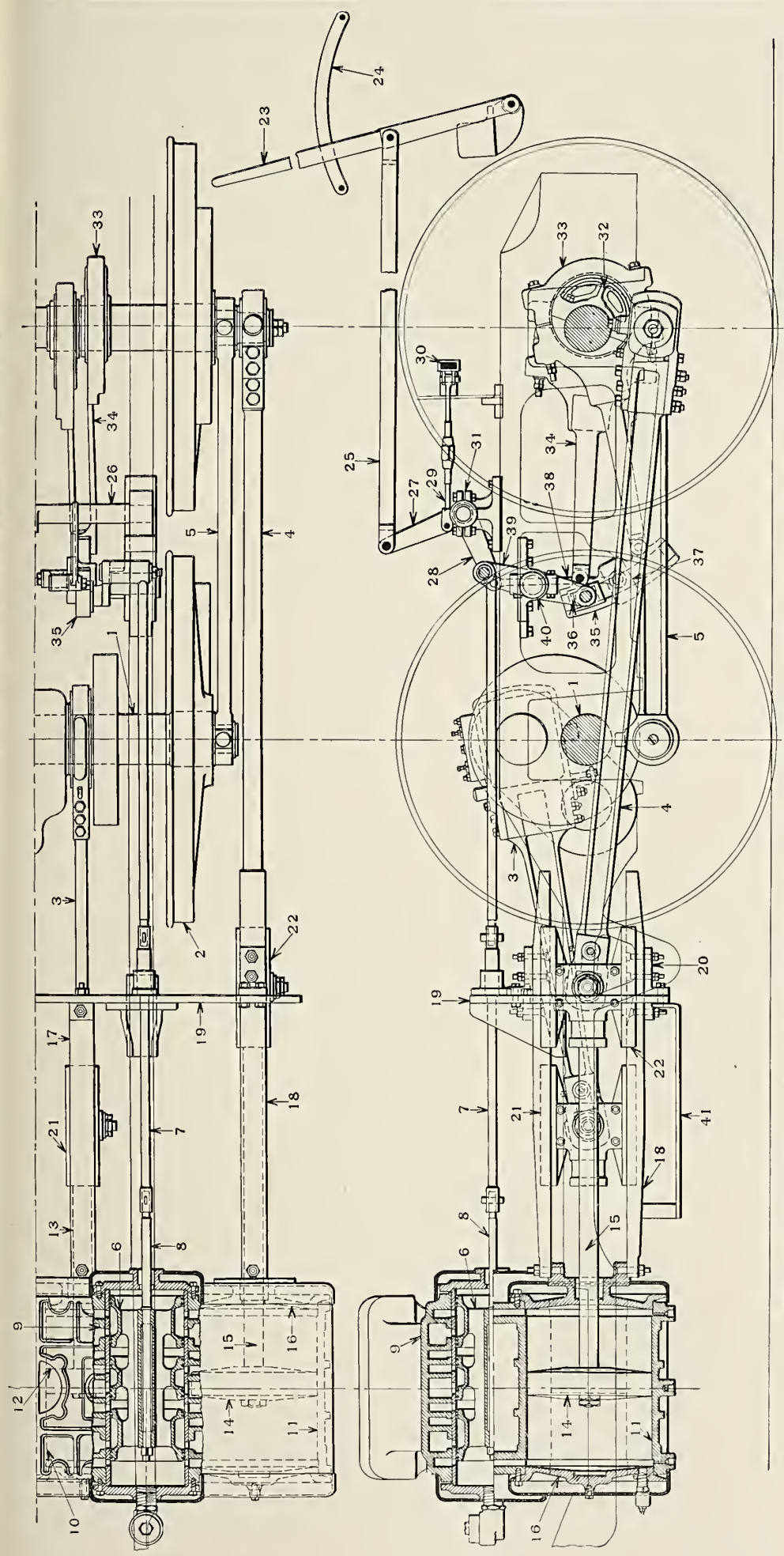

Fig. 701—Stephenson Link Valve Motion as Applied to Balanced Compound Locomotive; Baldwin Locomotive Works.

Names of Parts of Valve Gear for Baldwin Four-Cylinder Balanced and Tandem Compound Locomotives, Fig. 697 and Fig. 701.

1 *Crank Axle*
2 *Driving Wheel*
3 *High Pressure Connecting Rod*
4 *Low Pressure Connecting Rod*
5 *Side Rod*
6 *Valve*
6a *High Pressure Valve*
6b *Low Pressure Valve*
7 *Valve Rod*
8 *Valve Stem*
9 *Steam Chest*
10 *High Pressure Cylinder*
11 *Low Pressure Cylinder*
12 *High Pressure Piston*
13 *High Pressure Piston Rod*
14 *Low Pressure Piston*
15 *Low Pressure Piston Rod*
16 *Cylinder Head*
16a *Intermediate Cylinder Head*
17 *High Pressure Guide*
18 *Low Pressure Guide*
19 *Guide Yoke*
20 *Guide Yoke Knee*
21 *High Pressure Crosshead*
22 *Low Pressure Crosshead*
23 *Reverse Lever*
24 *Reverse Lever Quadrant*
25 *Reach Rod*
26 *Reverse Shaft*
27 *Reverse Shaft Arm*
28 *Lifting Arm*
29 *Reverse Shaft Counterbalance Rod*
30 *Reverse Shaft Counterbalance Spring*
31 *Reverse Shaft Bearing*
32 *Eccentric*
33 *Eccentric Strap*
34 *Eccentric Rod*
35 *Link*
36 *Link Block*
37 *Link Saddle*
38 *Link Hanger*
39 *Rocker*
40 *Rocker Bearing*
41 *Guide Step*

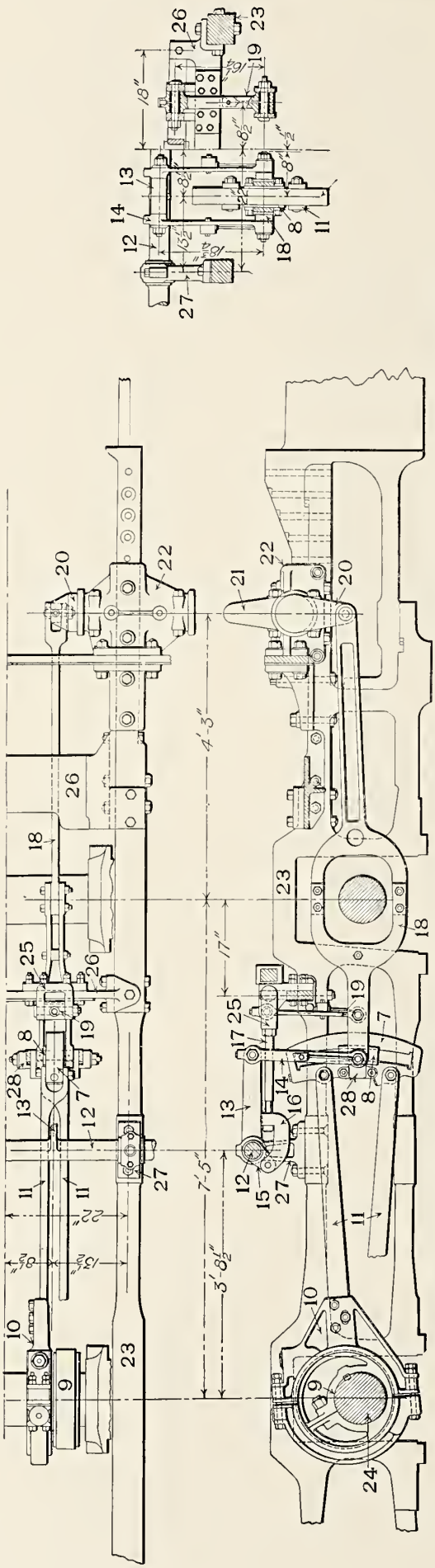

Fig. 702—Stephenson Link Valve Motion as Applied to Atlantic Type (4-4-2) Locomotive; Pennsylvania Railroad.

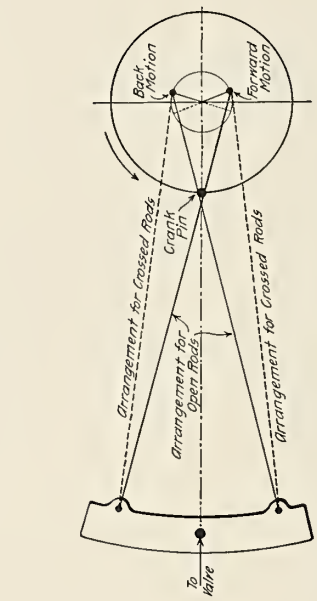

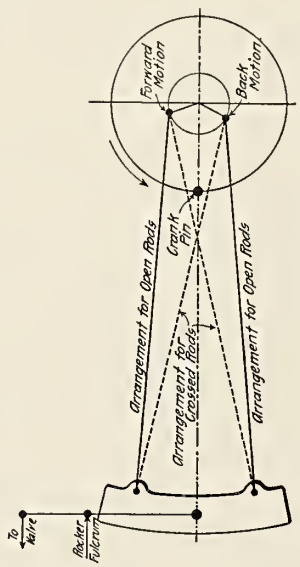

Fig. 703—Diagrams of Stephenson Link Motion with Open and Crossed Eccentric Rods.

Numbers Refer to Names of Parts on Page 384.

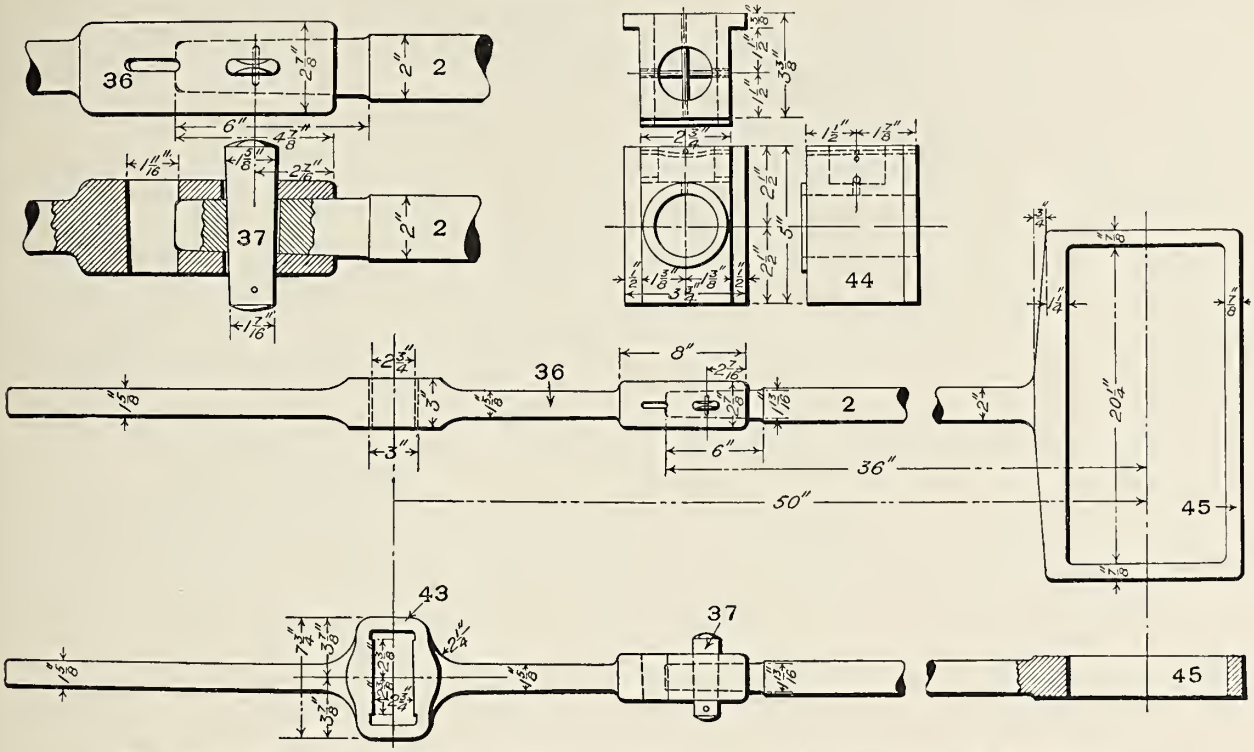

Fig. 704—Valve Rod and Yoke for Atlantic Type (4-4-2) Locomotive with Slide Valves.

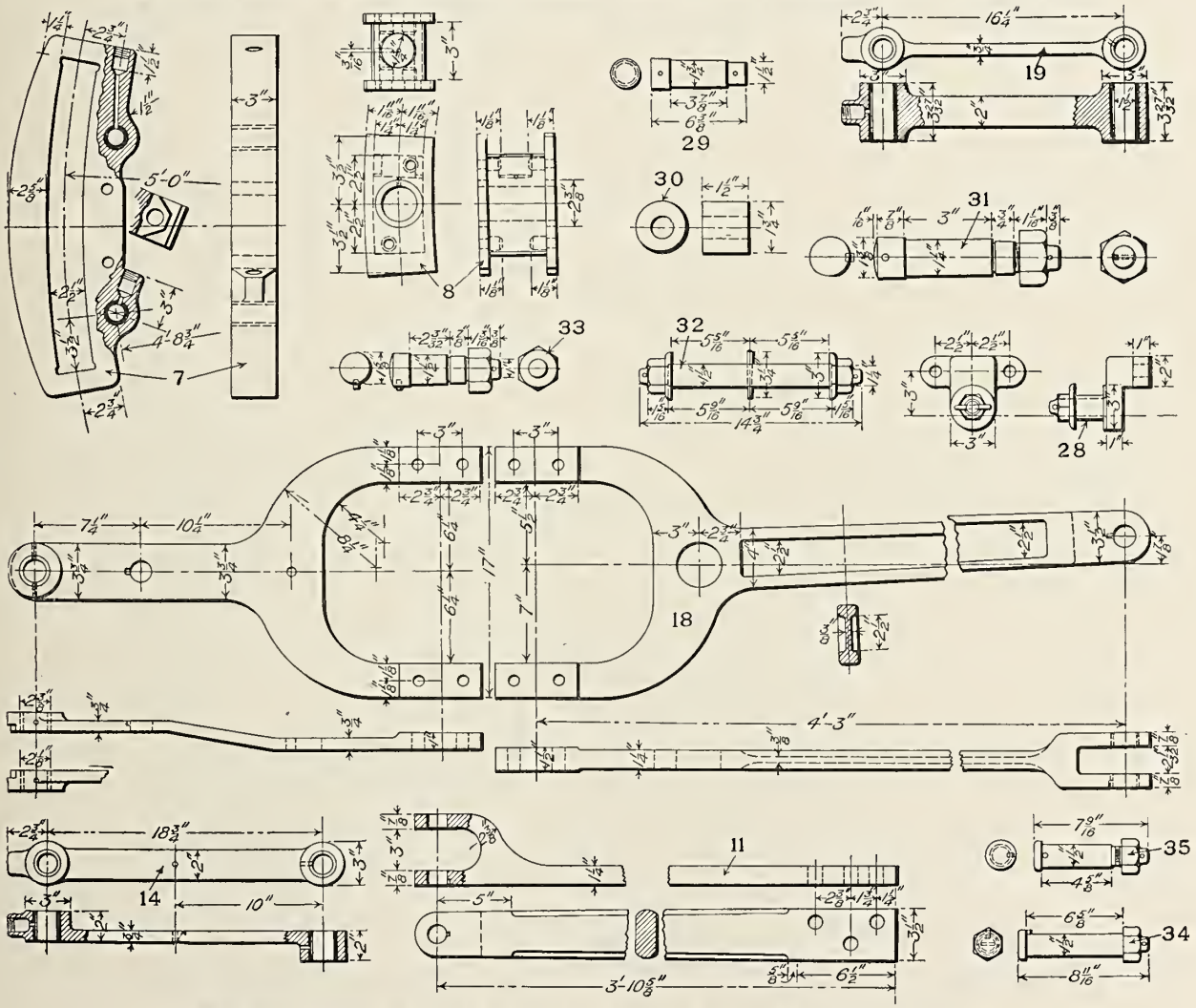

Fig. 705—Details of Valve Motion for Atlantic Type (4-4-2) Locomotive.

Numbers Refer to Names of Parts on Page 384.

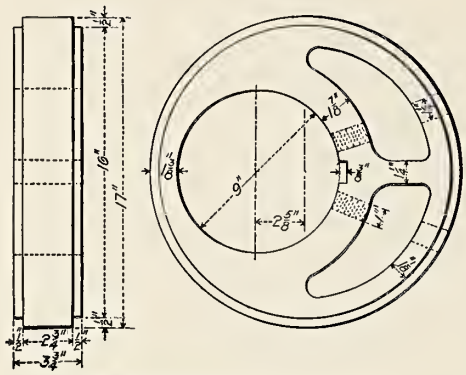

Fig. 706—Single Eccentric.

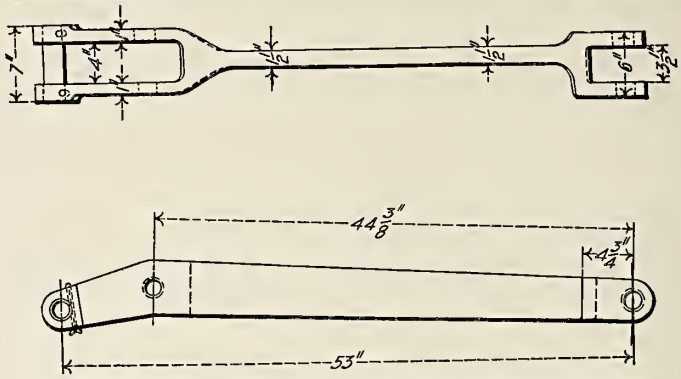

Fig. 707—Transmission Bar for Consolidation (2-8-0) Locomotive; American Locomotive Company.

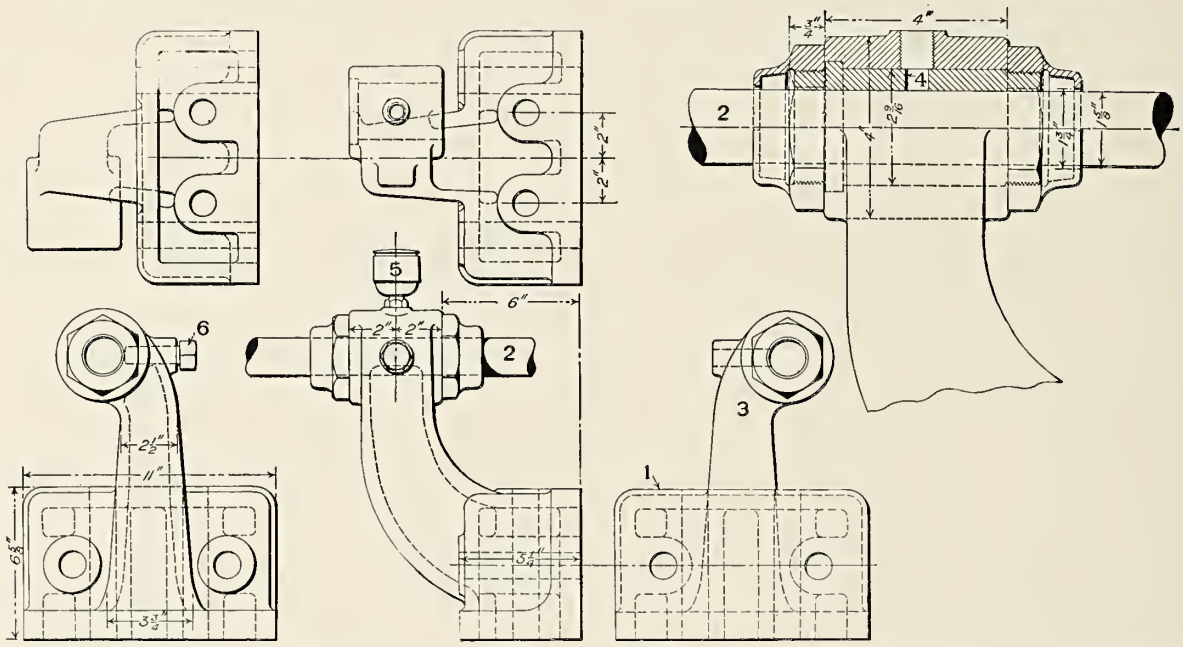

Fig. 708—Combined Guide Block and Valve Stem Guide for Atlantic Type (4-4-2) Locomotive; Pennsylvania Railroad.

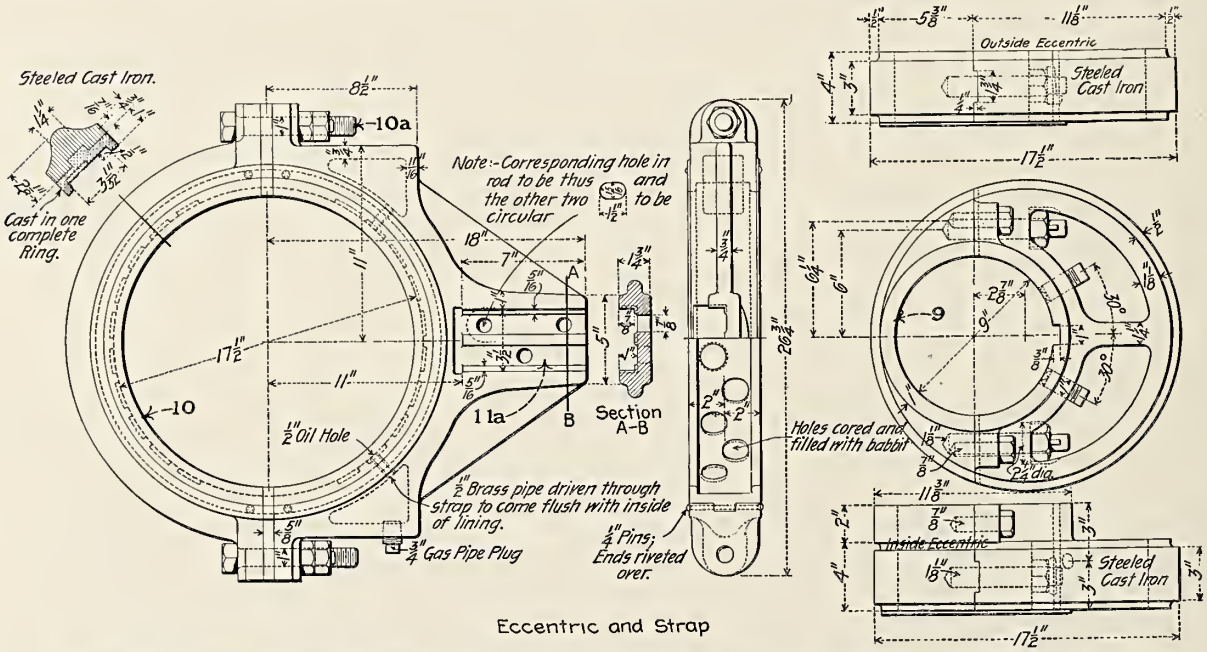

Fig. 709—Eccentric and Strap for Atlantic Type (4-4-2) Locomotive; Chicago & North Western.

Numbers Refer to Names of Parts on Page 384.

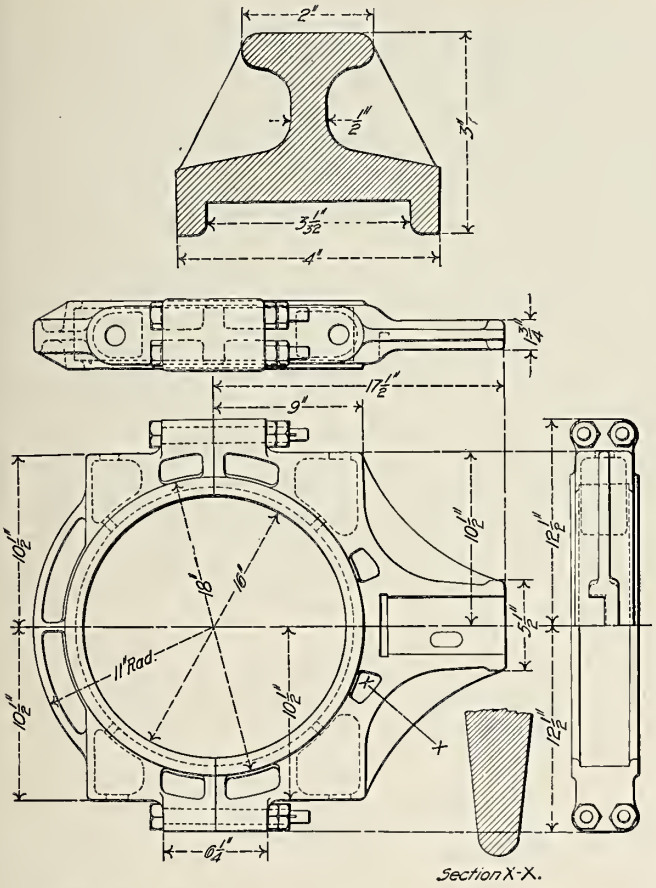

Fig. 710—Eccentric Strap for Consolidation (2-8-0) Locomotive; American Locomotive Company.

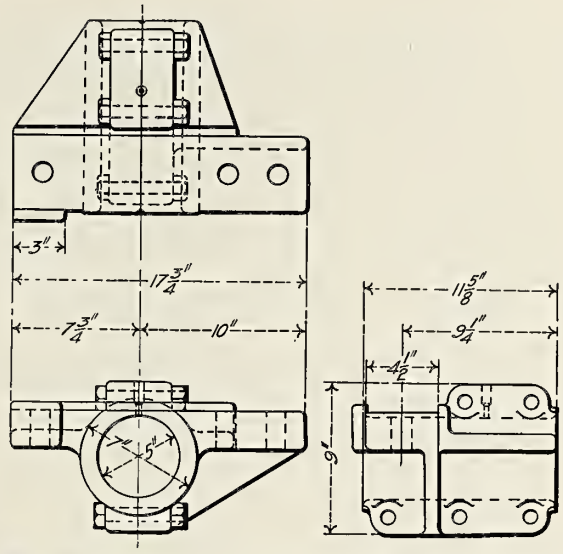

Fig. 711—Rocker Box for Consolidation (2-8-0) Locomotive; American Locomotive Company.

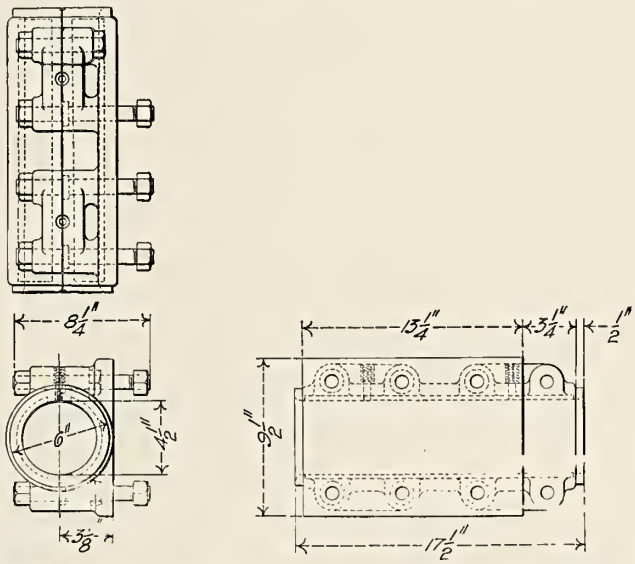

Fig. 712—Rocker Box for Consolidation (2-8-0) Locomotive; American Locomotive Company.

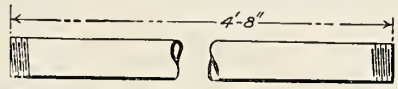

Fig. 713—Valve Stem of Pipe for Atlantic Type (4-4-2) Locomotive; Pennsylvania Railroad.

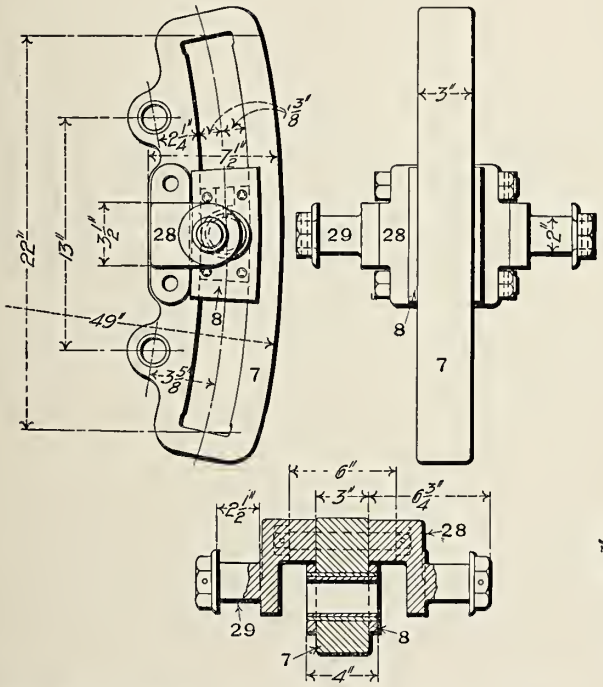

Fig. 714—Link for Consolidation (2-8-0) Locomotive; American Locomotive Company.

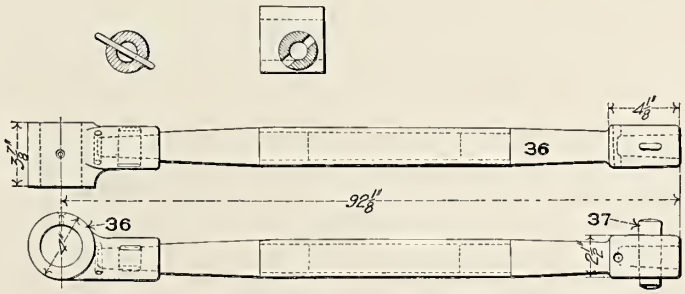

Fig. 715—Valve Rod for Consolidation (2-8-0) Locomotive; American Locomotive Company.

Numbers Refer to Names of Parts on Page 384.

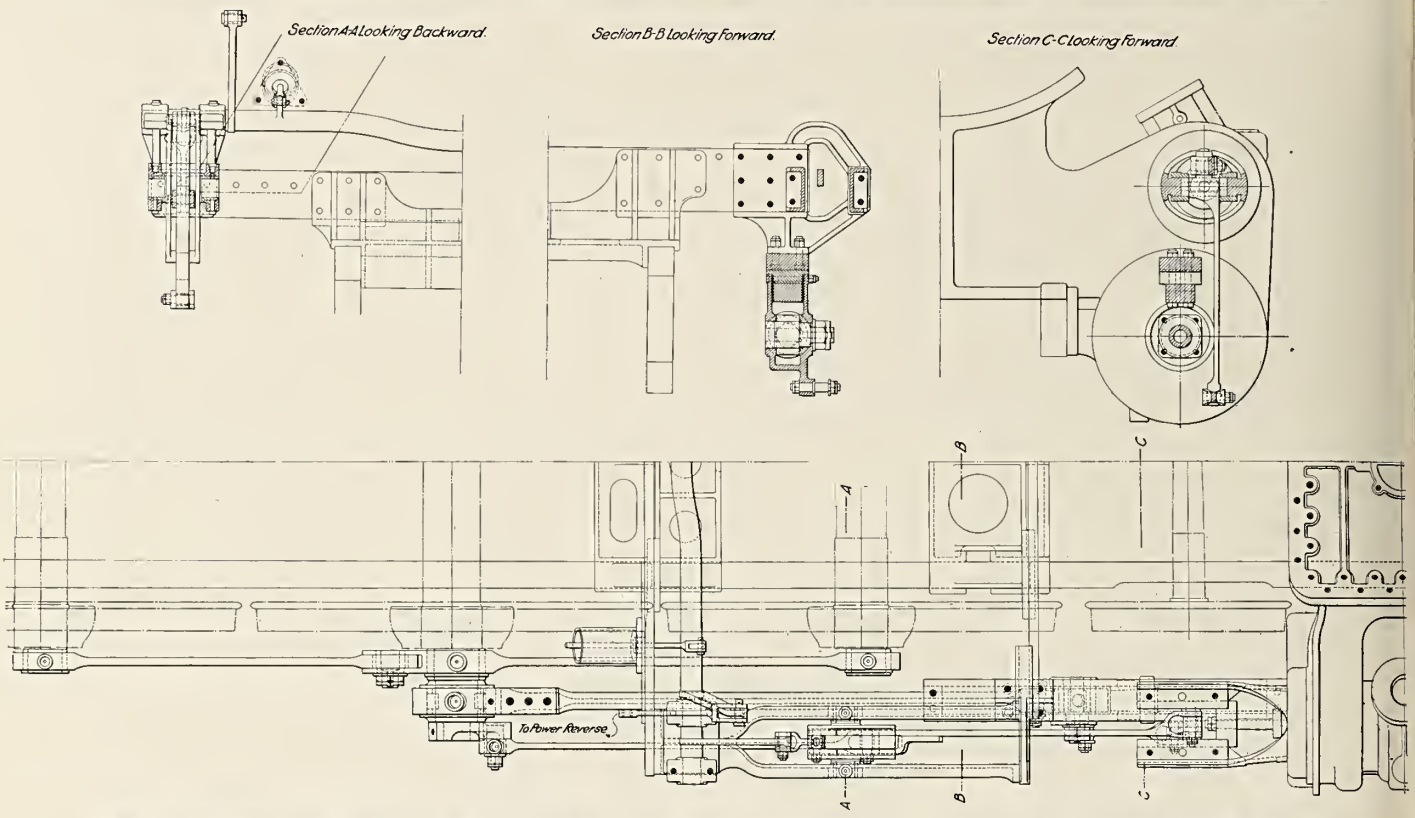

Fig. 716—Plan and Sections of Walschaert Valve Gear for Chicago, Burlington & Quincy Pacific Type (4-6-2) Locomotive; Baldwin Locomotive Works.

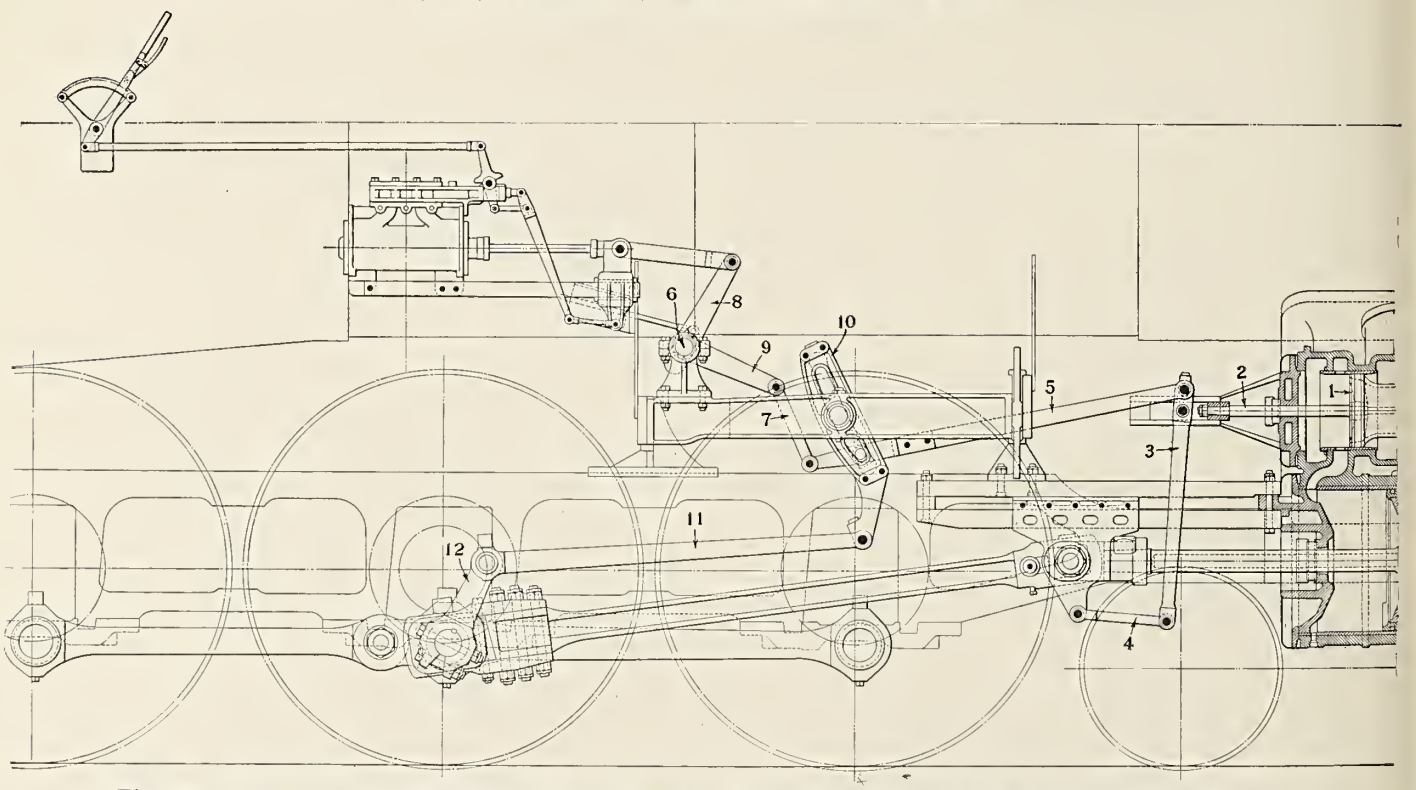

Fig. 717—Arrangement of Walschaert Valve Gear for Chicago, Burlington & Quincy Pacific Type (4-6-2) Locomotive; Baldwin Locomotive Works.

Names of Parts of Walschaert Valve Gear, Fig. 717.

1 *Valve*
2 *Valve Stem*
3 *Combination Lever*
4 *Crosshead Link*
5 *Radius Rod*
6 *Reverse Shaft*
7 *Lifting Link*
8 *Reverse Shaft Lever*
9 *Reverse Shaft Arm*
10 *Reverse Link*
11 *Eccentric Rod*
12 *Eccentric Crank*

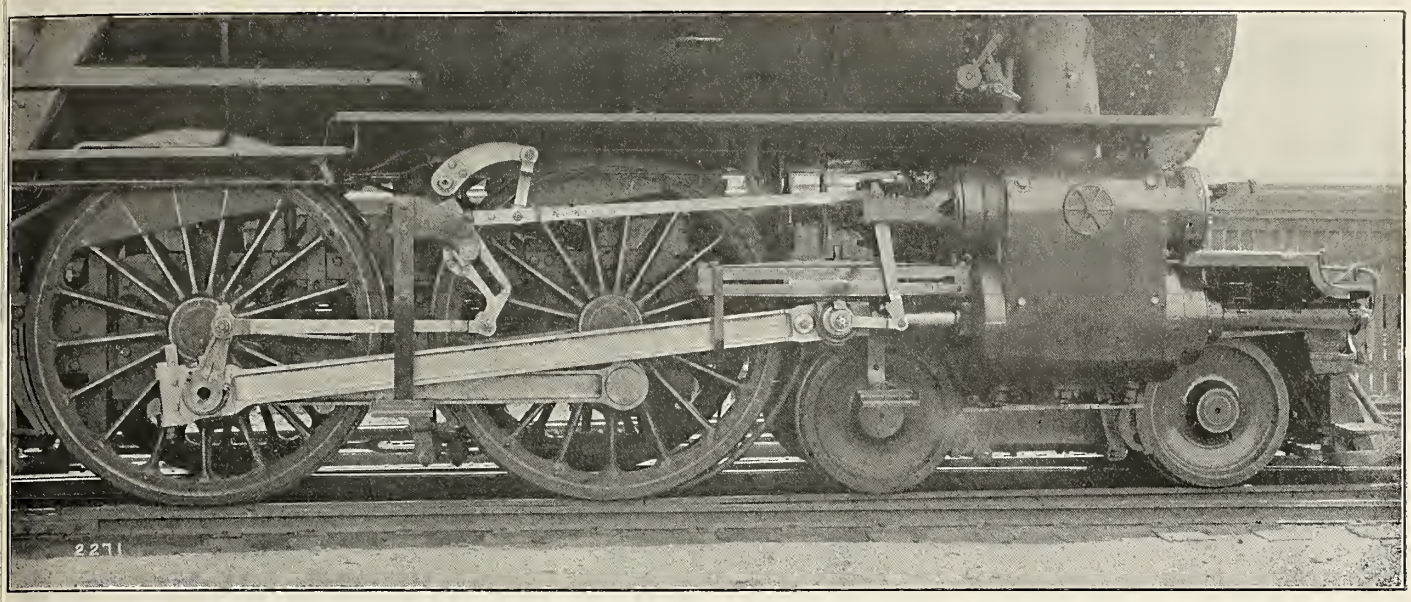

Fig. 718—Valve Gear on Class E-6-s Atlantic Type (4-4-2) Locomotive Notable Because of Its Light Weight; Pennsylvania Railroad.

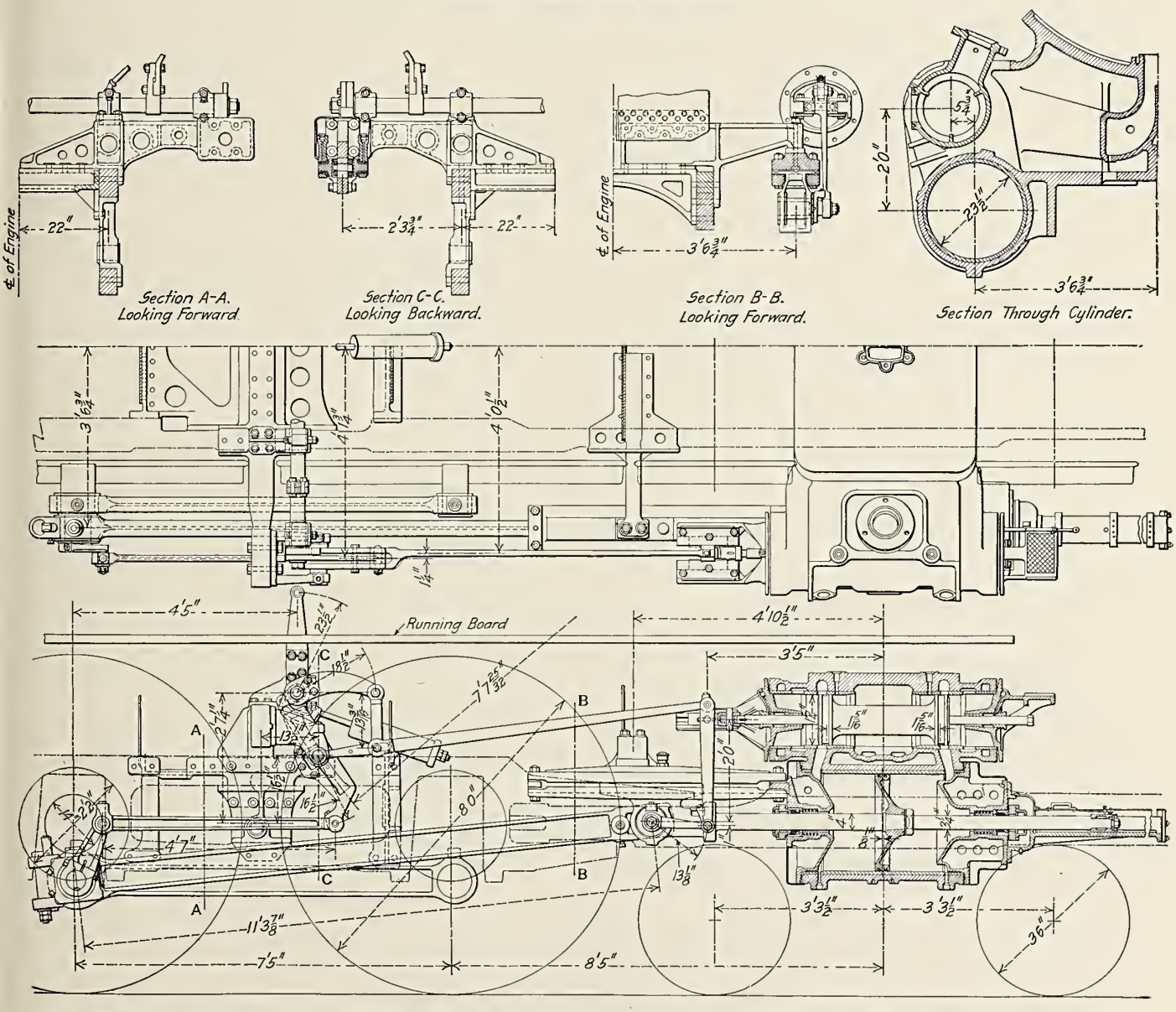

Fig. 719—Walschaert Valve Gear for Class E-6-s Atlantic Type (4-4-2) Locomotive; Pennsylvania Railroad.

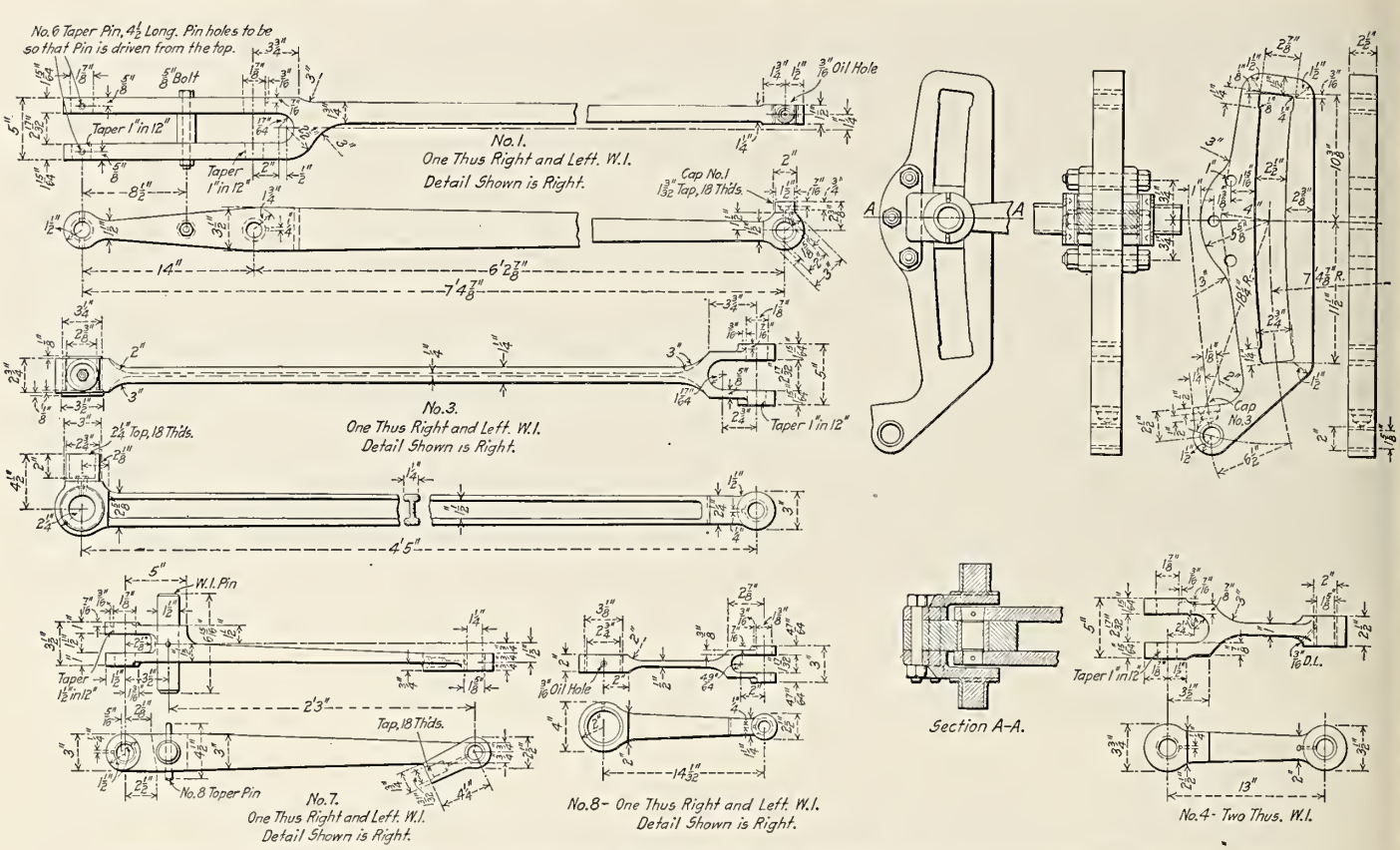

Fig. 720—Details of Walschaert Valve Gear for Class K-4-s Pacific Type (4-6-2) Locomotive; Pennsylvania Railroad.

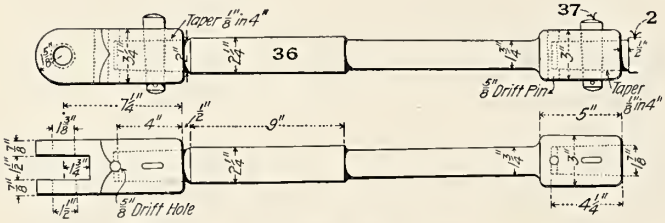

Fig. 721—Valve Rod for Pacific Type (4-6-2) Locomotive; Oregon Short Line.

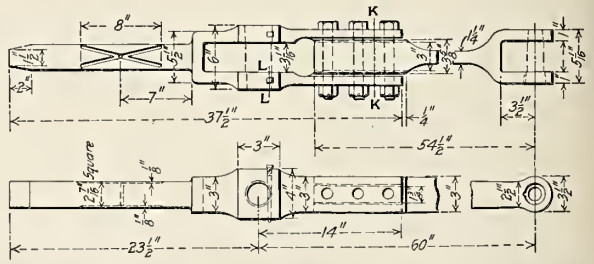

Fig. 722—Radius Rod of Walschaert Valve Gear for Pacific Type (4-6-2) Locomotive. Built for the New York Central & Hudson River by the American Locomotive Company.

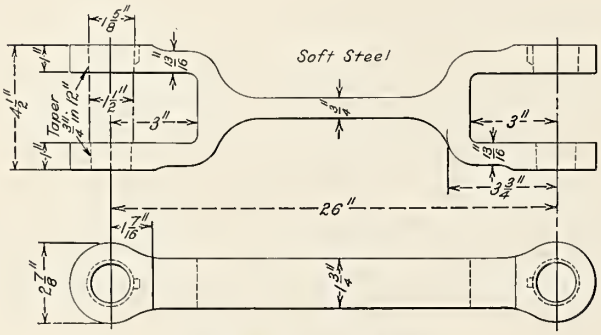

Fig. 723—Union Link.

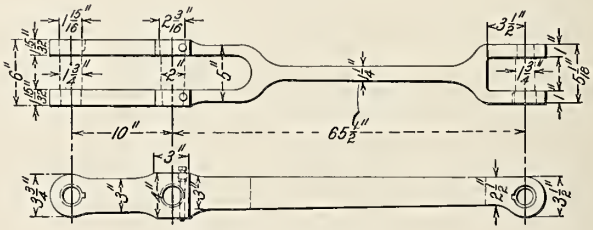

Fig. 724—Radius Rod.

Figs. 723-724 are Details of Walschaert Valve Gear for Mallet Articulated (2-6-6-2) Compound Locomotive. Built for the New York Central & Hudson River by the American Locomotive Company.

Numbers Refer to Names of Parts on Page 384.

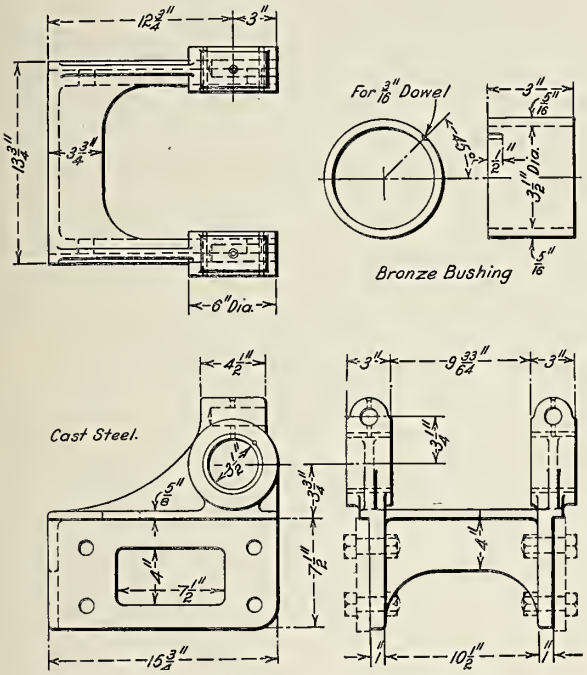

Fig. 725—Link Support and Bearing.

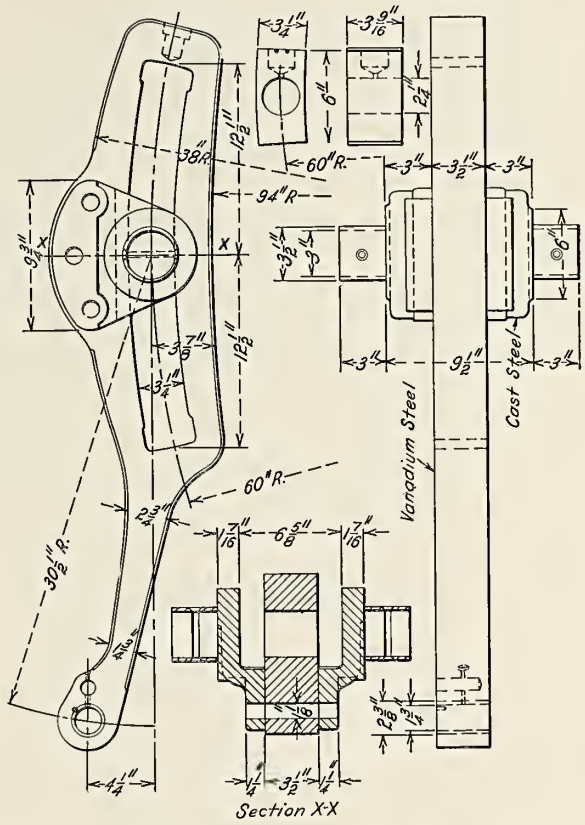

Fig. 726—Vanadium Steel Link.

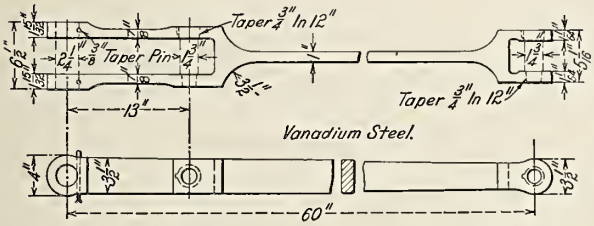

Fig. 727—Vanadium Steel Radius Rod.

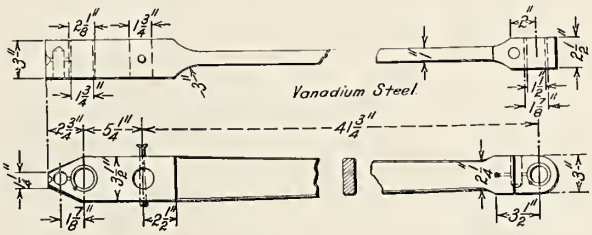

Fig. 728—Vanadium Steel Combination Lever.

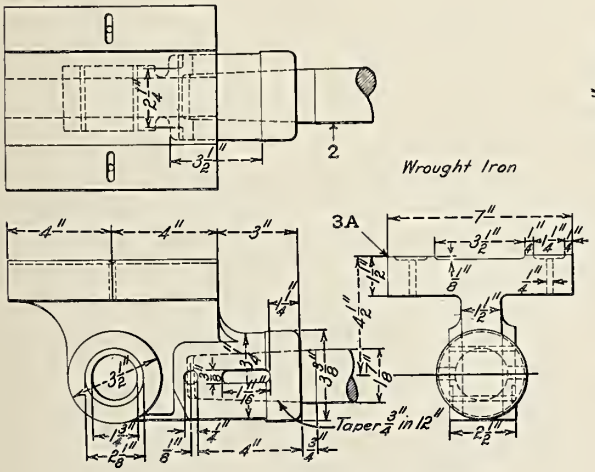

Fig. 729—Valve Stem Crosshead.

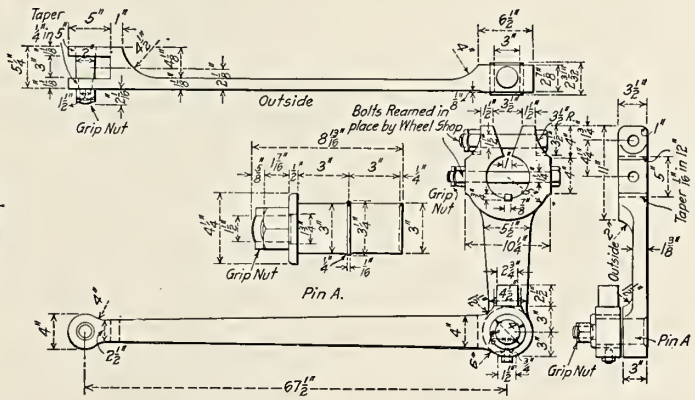

Fig. 730—Eccentric Crank and Rod of Walschaert Valve Gear for Santa Fe Type (2-10-2) Locomotive. Built for the Chicago, Burlington & Quincy by the Baldwin Locomotive Works.

Figs. 725-728 are Details of Walschaert Valve Gear for Pacific Type (4-6-2) Locomotive No. 50,000. Built for Experimental Purposes by the American Locomotive Company.

Numbers Refer to Names of Parts on Page 384.

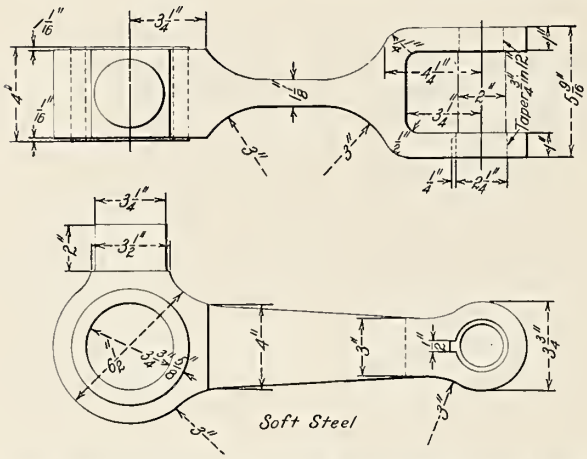

Fig. 731—Eccentric Rod for Mountain Type (4-8-2) Locomotive. Built for the Chesapeake & Ohio by the American Locomotive Company.

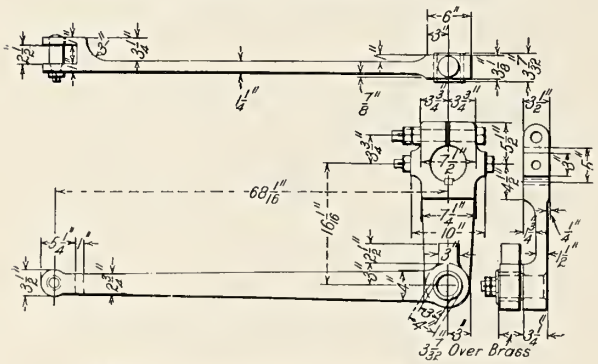

Fig. 734—Eccentric Rod and Crank.

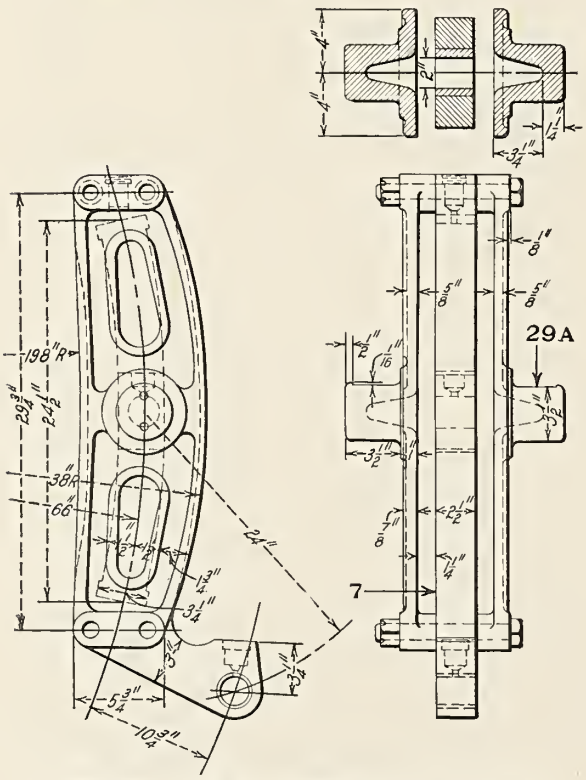

Fig. 736—Link for Walschaert Valve Gear.

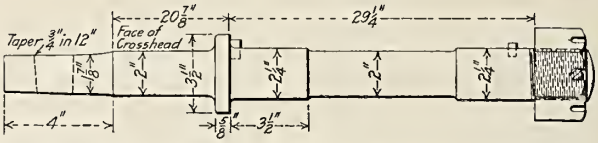

Fig. 732—Valve Stem for Piston Valve; American Locomotive Company.

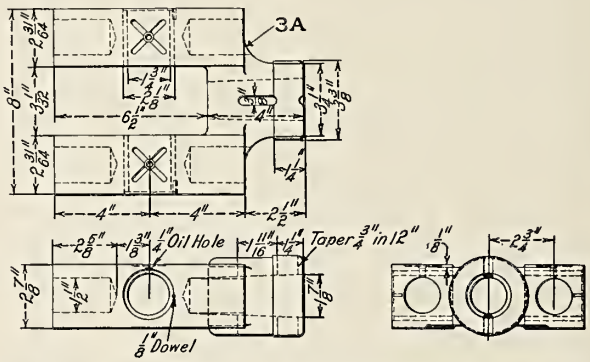

Fig. 733—Valve Stem Crosshead; American Locomotive Company.

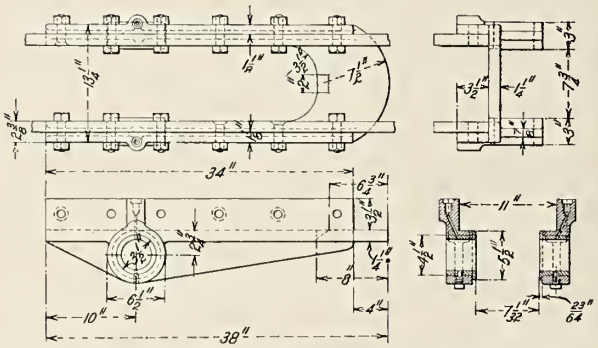

Fig. 735—Link Support and Bearing.

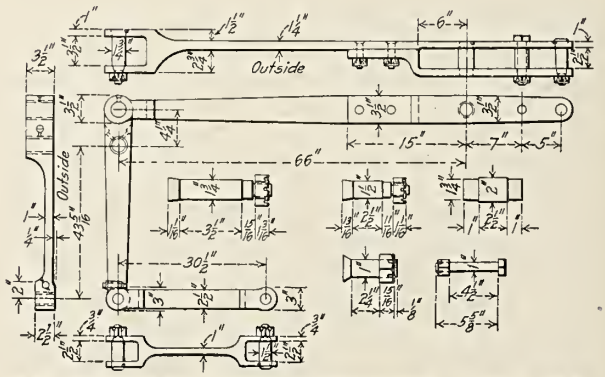

Fig. 737—Radius Rod, Combination Lever and Union Link.

Figs. 734-737 are Details of Walschaert Valve Gear for Pacific Type (4-6-2) Locomotive. Built for the Nashville, Chattanooga & St. Louis by the Baldwin Locomotive Works.

Numbers Refer to Names of Parts on Page 384.

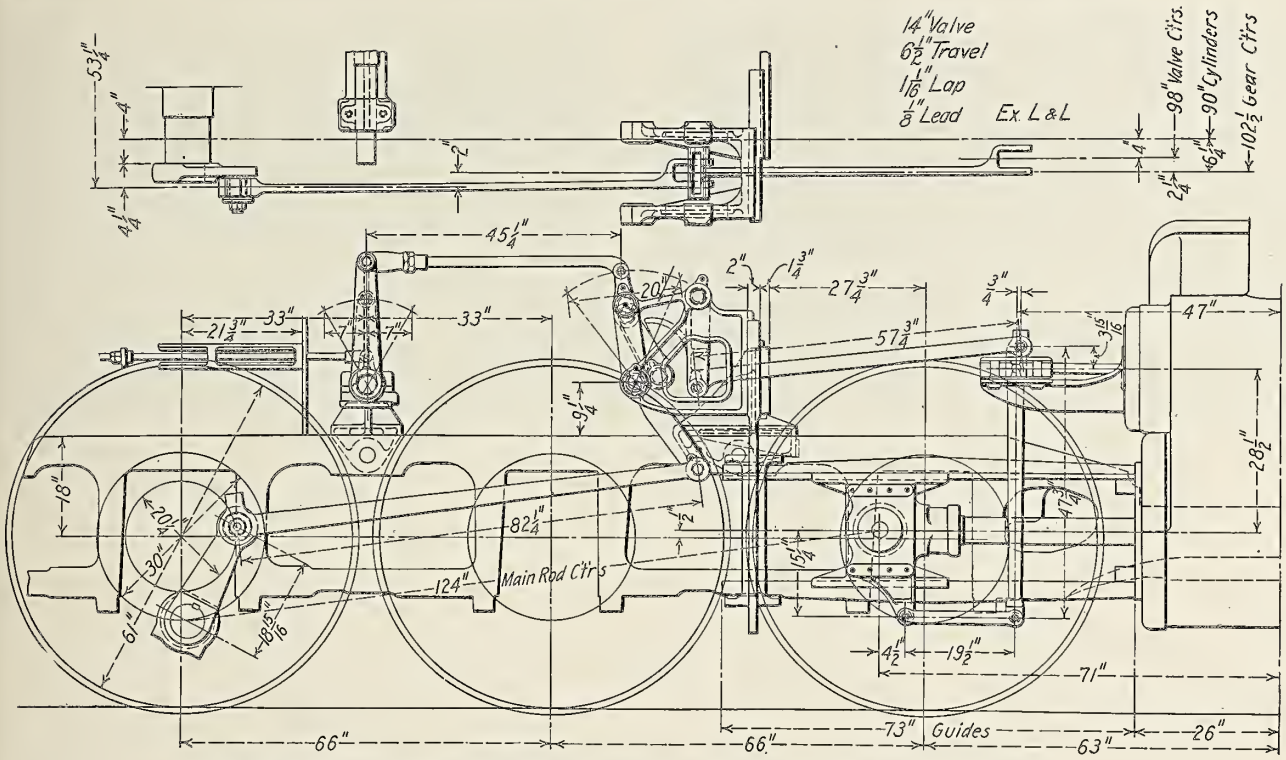

Fig. 738—Baker Valve Gear for Inside Admission; The Pilliod Company.

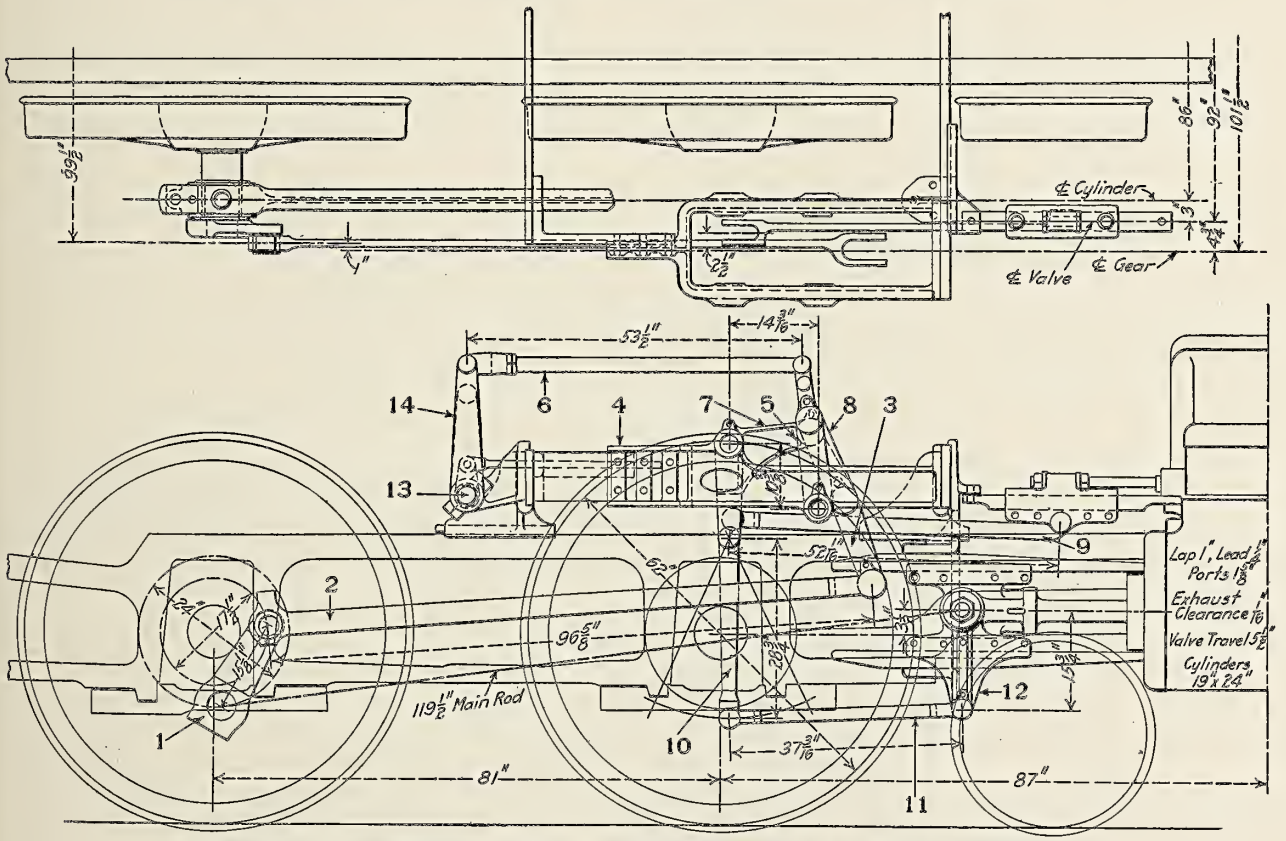

Fig. 739—Baker Valve Gear for Outside Admission; The Pilliod Company.

Names of Parts of Baker Valve Gear, Fig. 739.

1 *Eccentric Crank*
2 *Eccentric Rod*
3 *Gear Connecting Rod*
4 *Gear Frame*
5 *Reverse Yoke*
6 *Reach Rod*
7 *Bell Crank*
8 *Radius Bar*
9 *Valve Rod*
10 *Combination Lever*
11 *Union Link*
12 *Crosshead Arm*
13 *Reverse Shaft*
14 *Reverse Shaft Arm*

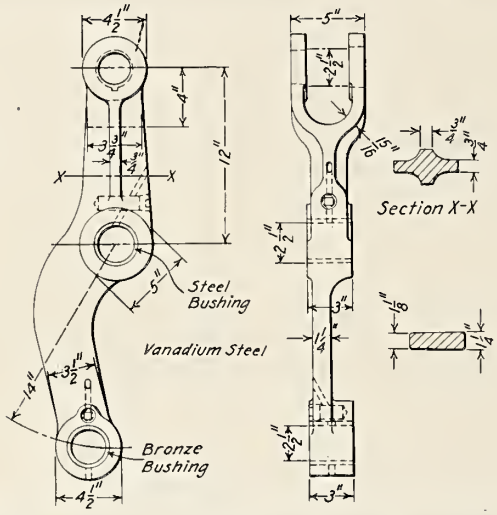

Fig. 740—Connection Rod for Inside Admission.

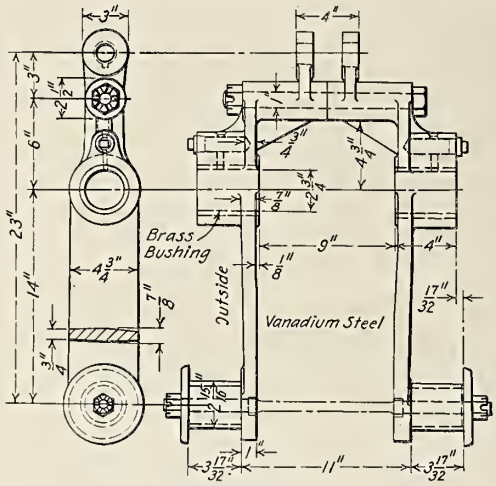

Fig. 741—Reverse Yoke.

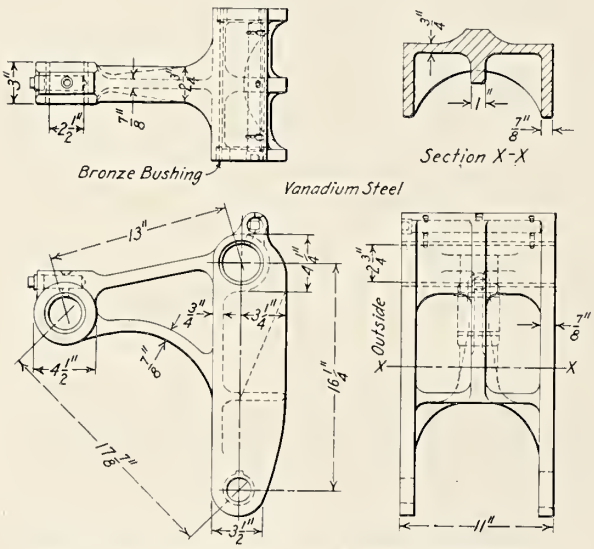

Fig. 742—Bell Crank for Inside Admission.

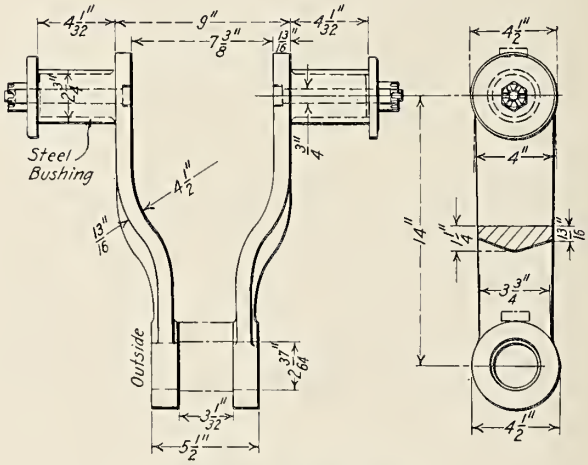

Fig. 743—Radius Bar.

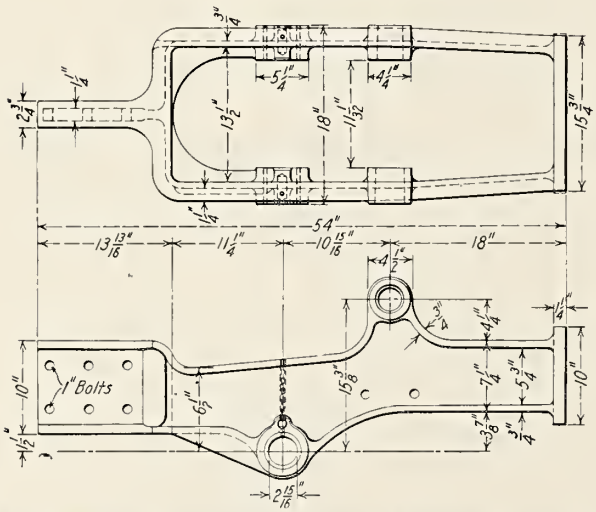

Fig. 744—Gear Frame for Inside Admission, Type 1.

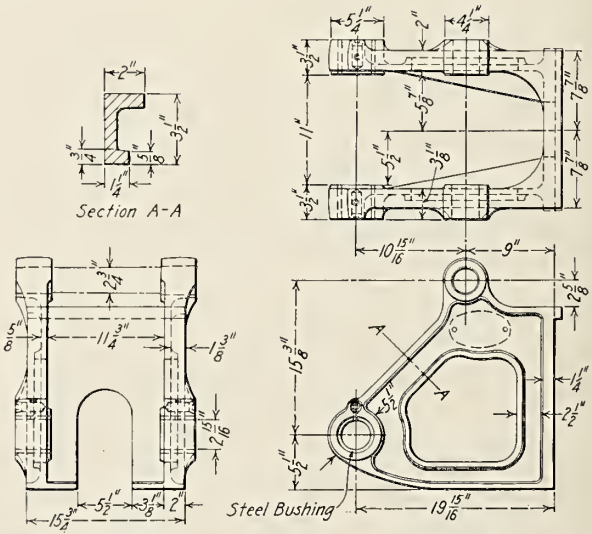

Fig. 745—Gear Frame for Inside Admission, Type 2.

Figs. 740-745 are Details of Baker Valve Gear; The Pilliod Company.

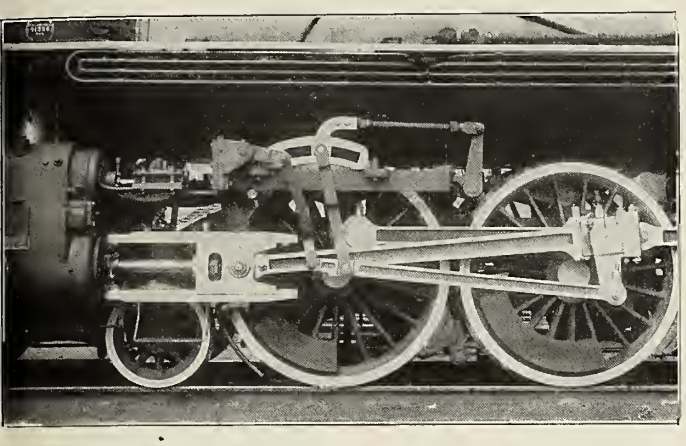

Fig. 746—Southern Valve Gear Arranged for Inside Admission; Southern Locomotive Valve Gear Company.

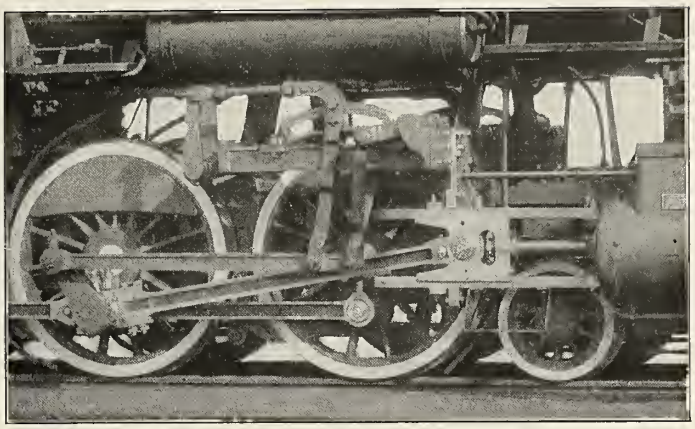

Fig. 747—Southern Valve Gear Arranged for Outside Admission; Southern Locomotive Valve Gear Company.

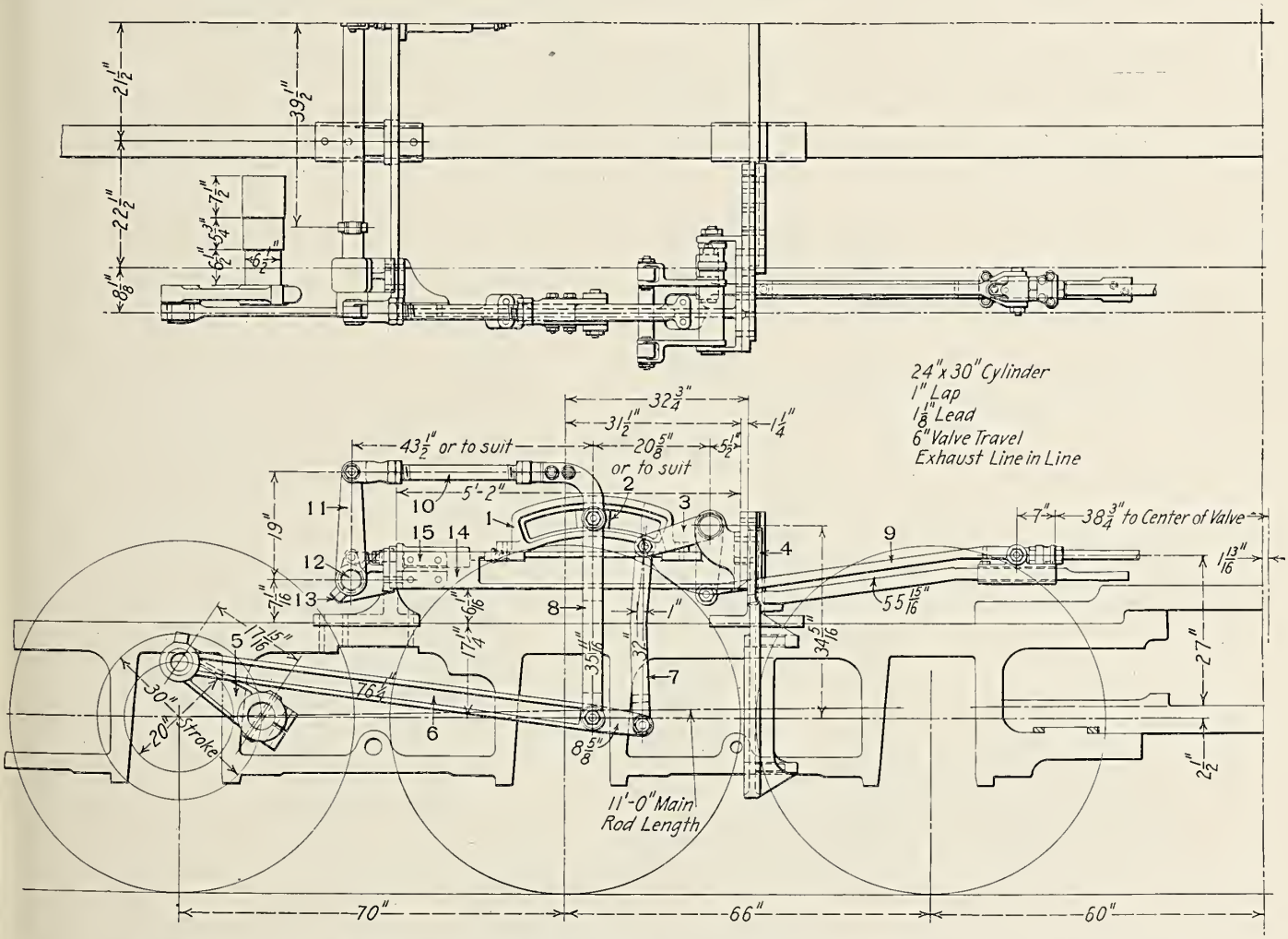

Fig. 748—Arrangement of Southern Valve Gear for Missouri Pacific Consolidation (2-8-0) Locomotive; Southern Locomotive Valve Gear Company.

Names of Parts of Southern Valve Gear, Fig. 748.

1 *Link*
2 *Link Block*
3 *Bell Crank*
4 *Guide Yoke*
5 *Eccentric Crank*
6 *Eccentric Rod*
7 *Transmission Yoke*
8 *Radius Hanger*
9 *Valve Rod*
10 *Auxiliary Reach Rod*
11 *Reverse Shaft Arm*
12 *Reverse Shaft*
13 *Reverse Shaft Bearing*
14 *Link Support*
15 *Link Support Corner Bracket*

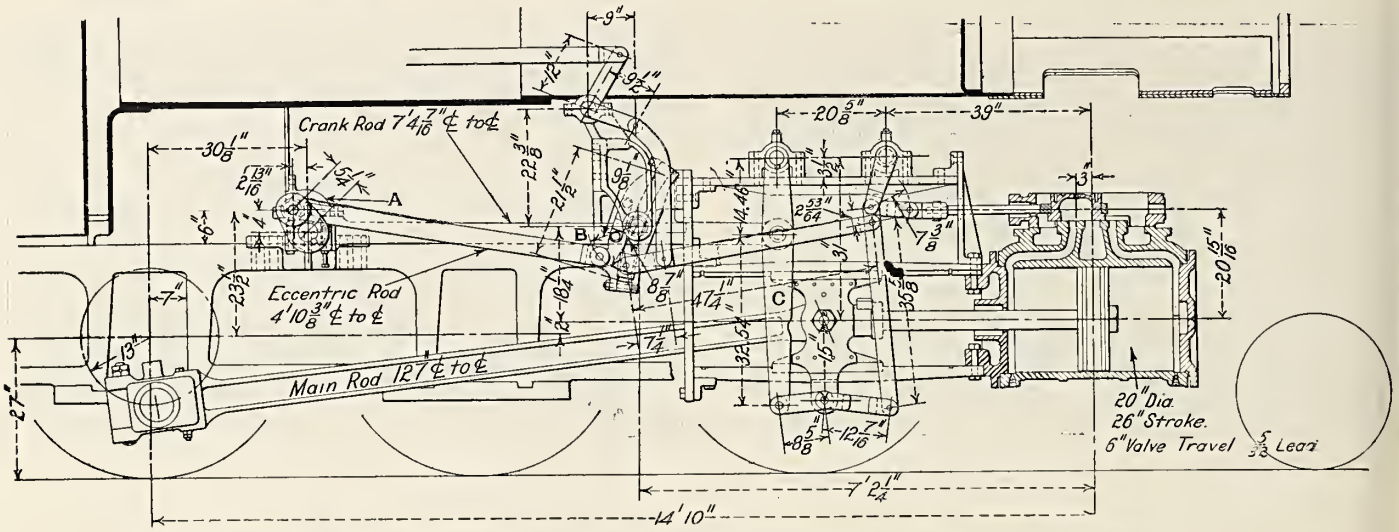

Fig. 749—Valve Gear Driven from the Crosshead; Chicago, Peoria & St. Louis.

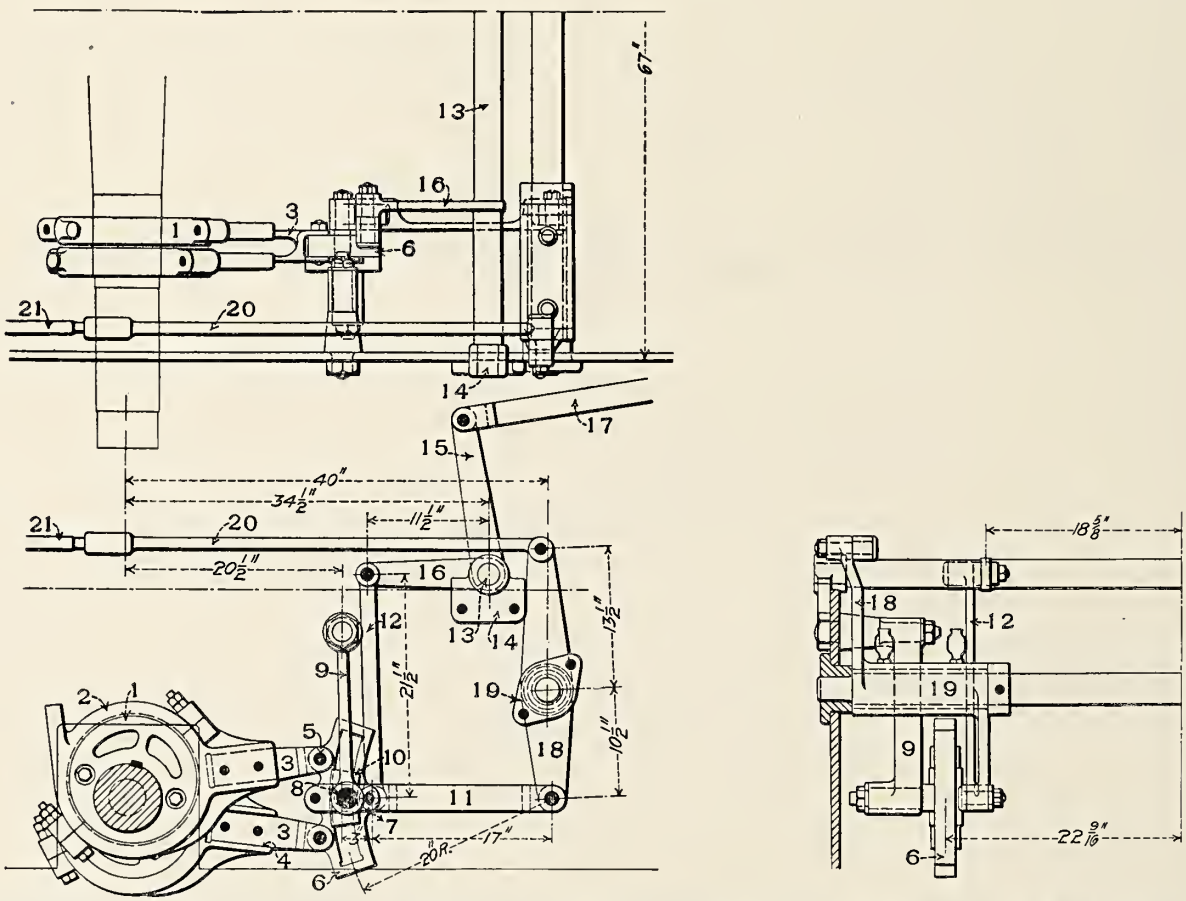

Fig. 750—Gooch Valve Motion as Applied to Rack Locomotive. Built for the Manitou & Pike's Peak by the Baldwin Locomotive Works.

Names of Parts of Gooch Valve Motion, Fig. 750.

1	*Eccentric*	8	*Link Saddle Pin*	15	*Reverse Shaft Lever*
2	*Eccentric Strap*	9	*Link Hanger*	16	*Reverse Shaft Arm*
3	*Eccentric Rod*	10	*Link Block*	17	*Reach Rod*
4	*Eccentric Rod Seat*	11	*Radius Bar*	18	*Rocker*
5	*Eccentric Rod Pin*	12	*Radius Bar Hanger*	19	*Rocker Box*
6	*Link*	13	*Reverse Shaft*	20	*Valve Rod*
7	*Link Saddle*	14	*Reverse Shaft Bearing*	21	*Valve Stem*

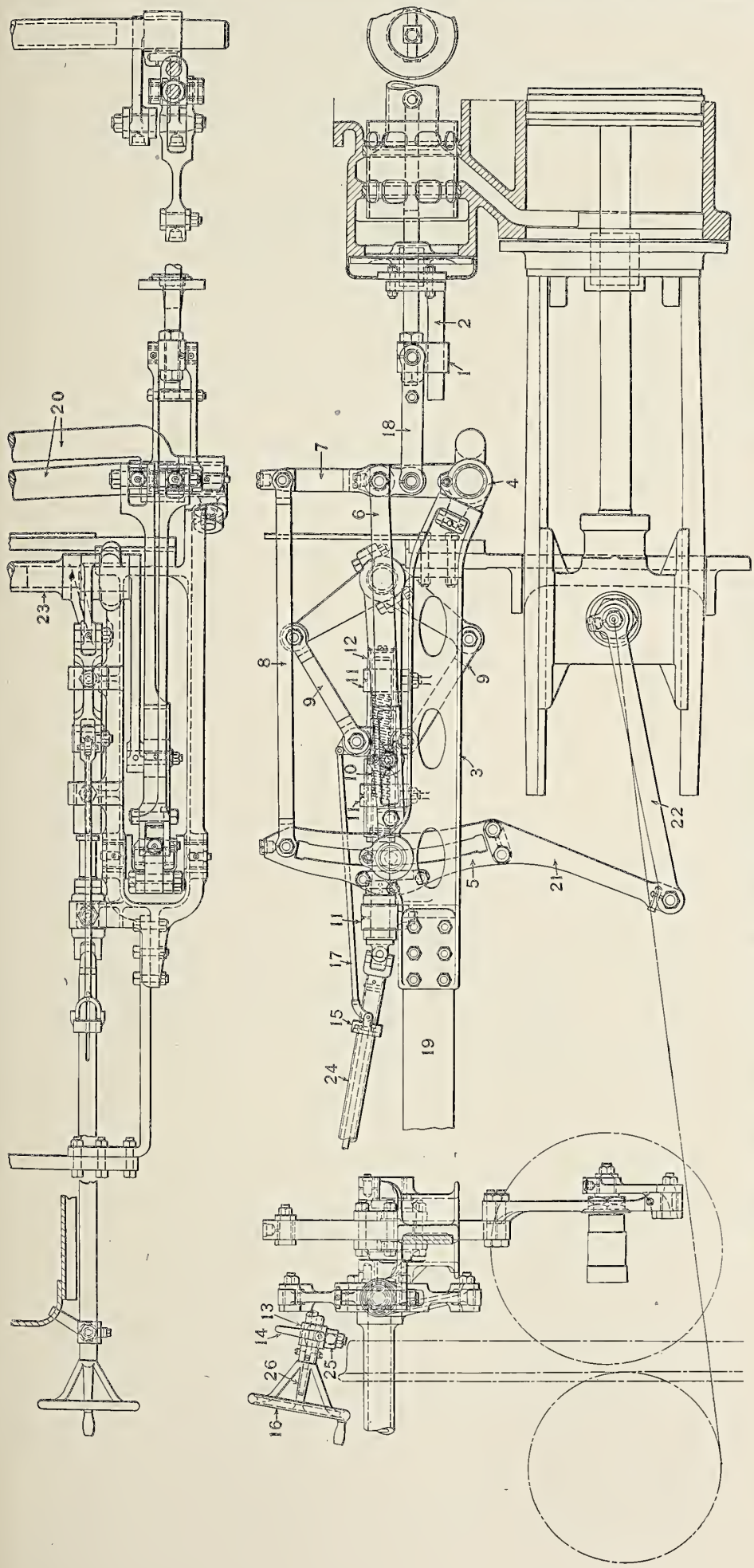

Fig. 751—Young Valve Gear and Reversing Mechanism; Pyle-National Electric Headlight Company.

Names of Parts of Young Valve Gear and Reversing Mechanism, Fig. 751.

1 *Valve Rod Crosshead*
2 *Valve Rod Crosshead Guide*
3 *Gear Frame*
4 *Rock Shaft Bearing*
5 *Link*
6 *Radius Bar*
7 *Combination Lever*
8 *Combination Link*
9 *Reverse Shaft Links*
10 *Reverse Screw*
11 *Reverse Screw Supports*
12 *Reverse Screw Crosshead*
13 *Reverse Rod Support*
14 *Reverse Rod Support Handle*
15 *Reverse Rod Ring*
16 *Reverse Wheel*
17 *Reverse Indicator Coupling Rod*
18 *Valve Links*
19 *Gear Frame Extension*
20 *Rock Shafts*
21 *Link Extension*
22 *Union Links*
23 *Reverse Shaft*
24 *Reverse Screw Operating Rod*
25 *Reverse Support Stud*
26 *Reverse Indicator Rod*

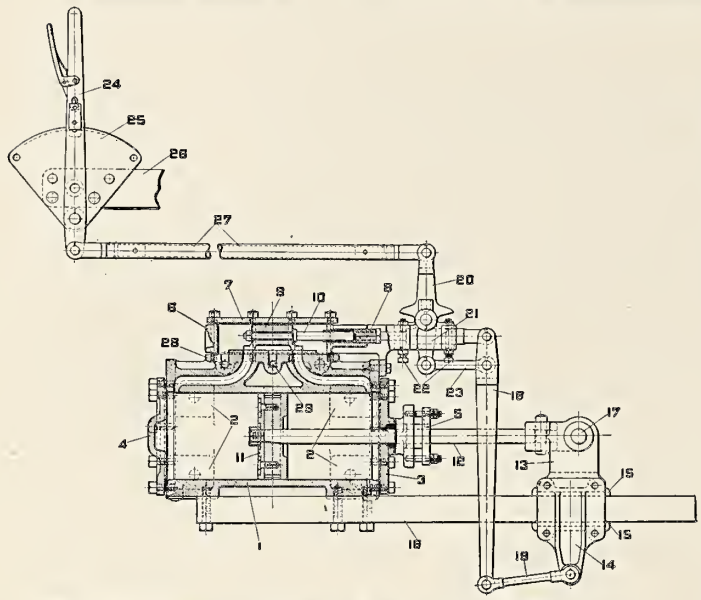

Fig. 752—Ragonnet Power Reverse Gear; Economy Devices Corporation.

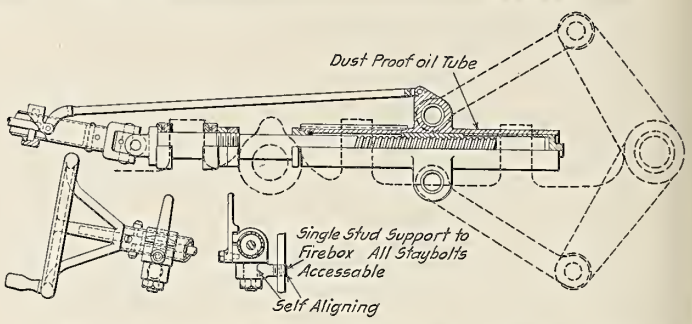

Fig. 753—Details of Young Screw Reverse Gear Shown in Fig. 751; Pyle-National Electric Headlight Company.

Names of Parts of Ragonnet Power Reverse Gear, Fig. 752.

1 *Cylinder*
2 *Cylinder Support*
3 *Cylinder Head, Front*
4 *Cylinder Head, Back*
5 *Cylinder Gland*
6 *Valve Chest*
7 *Valve Chest Cap*
8 *Valve Chest Gland*
9 *Valve*
10 *Valve Stem*
11 *Piston*
12 *Piston Rod*
13 *Crosshead*
14 *Crosshead Plate*
15 *Crosshead Gibs*
16 *Crosshead Guide*
17 *Reach Rod Connecting Pin*
18 *Floating Lever*
19 *Floating Lever Link*
20 *Rocker*
21 *Valve Stem Guide*
22 *Safety Stop Set Screw*
23 *Connecting Link*
24 *Reverse Lever*
25 *Reverse Lever Support and Quadrant*
26 *Reverse Lever Bracket*
27 *Reverse Lever Connecting Rod*
28 *Air Inlet*
29 *Exhaust Port*

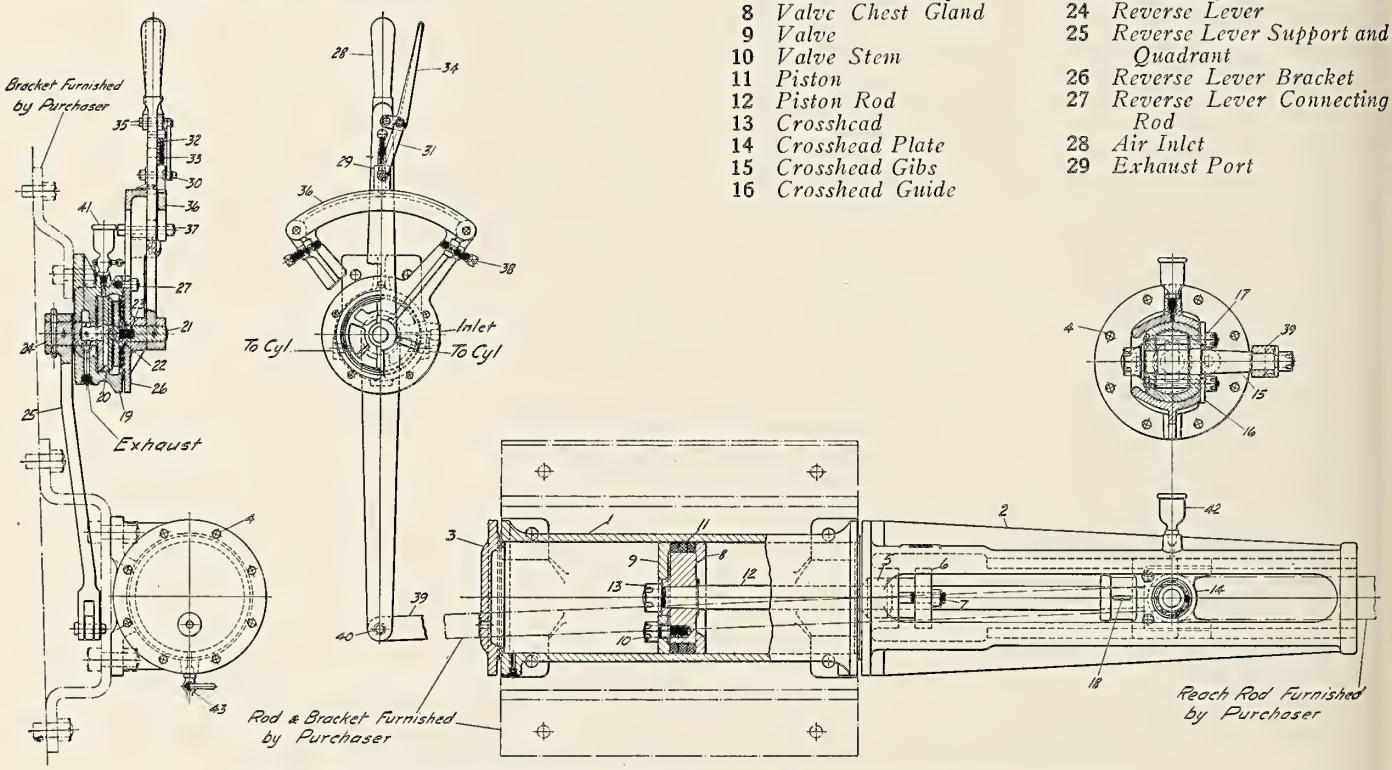

Fig. 754—Casey-Cavin Power Reverse Gear; Economy Devices Corporation.

Names of Parts of Casey-Cavin Power Reverse Gear, Fig. 754.

1 *Cylinder*
2 *Cylinder Head, Front (Crosshead Guide)*
3 *Cylinder Head, Back*
4 *Cylinder Head, Studs and Nuts*
5 *Piston Rod Packing*
6 *Piston Rod Gland*
7 *Piston Rod Gland, Studs and Nuts*
8 *Piston Head*
9 *Piston Follower*
10 *Piston Follower, Studs and Nuts*
11 *Piston Packing*
12 *Piston Rod*
13 *Piston Rod Nut*
14 *Crosshead*
15 *Crosshead Pin with Nuts and Washers*
16 *Crosshead Guide Plate*
17 *Crosshead Guide Plate Bolts and Nut*
18 *Crosshead Key*
19 *Valve Body*
20 *Valve Hand Disc*
21 *Valve Hand Disc Spindle*
22 *Valve Hand Disc Spindle Washer*
23 *Valve Hand Disc Spring*
24 *Valve Power Disc*
25 *Valve Power Lever*
26 *Valve Cover*
27 *Valve Cover Studs and Nuts*
28 *Hand Lever*
29 *Hand Lever Latch*
30 *Hand Lever Latch Bolt and Washer*
31 *Hand Lever Latch Link*
32 *Hand Lever Latch Spring*
33 *Hand Lever Latch Spring Rod*
34 *Hand Lever Handle*
35 *Hand Lever Handle Pins (2)*
36 *Hand Lever Quadrant*
37 *Hand Lever Quadrant Bolts and Nuts*
38 *Hand Lever Set Screws and Nuts*
39 *Power Lever Rod Ends*
40 *Power Lever Pin*
41 *Valve Body Oil Cup*
42 *Guide Oil Cup*
43 *Drain Cock Complete (2)*

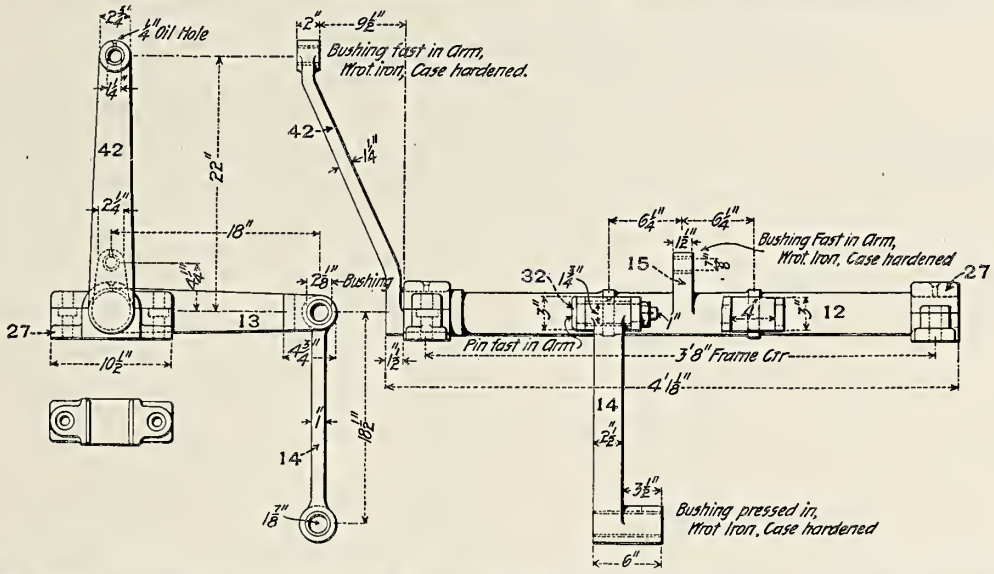

Fig. 755—Reverse Shaft for Atlantic Type (4-4-2) Locomotive; Chicago & North Western.

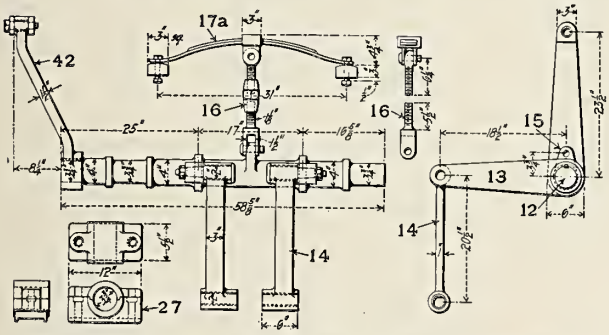

Fig. 756—Reverse Shaft and Spring; Atchison, Topeka & Santa Fe.

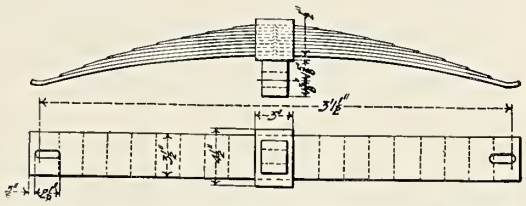

Fig. 757—Reverse Shaft Counterbalance Spring for Atlantic Type (4-4-2) Locomotive; Pennsylvania Railroad.

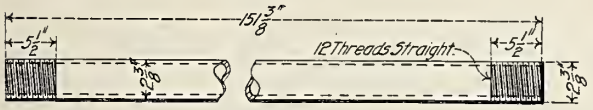

Fig. 758—Reverse Shaft Reach Rod for Consolidation (2-8-0) Locomotive; American Locomotive Company.

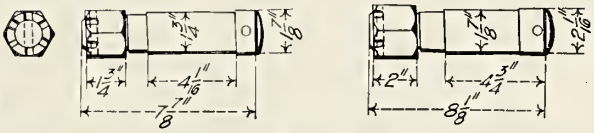

Fig. 759—Transmission Bar Pins for Consolidation (2-8-0) Locomotive; American Locomotive Company.

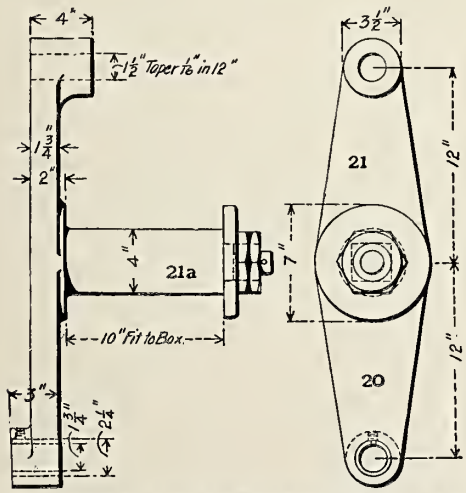

Fig. 760—Rocker for Ten-Wheel (4-6-0) Locomotive; Intercolonial Railway.

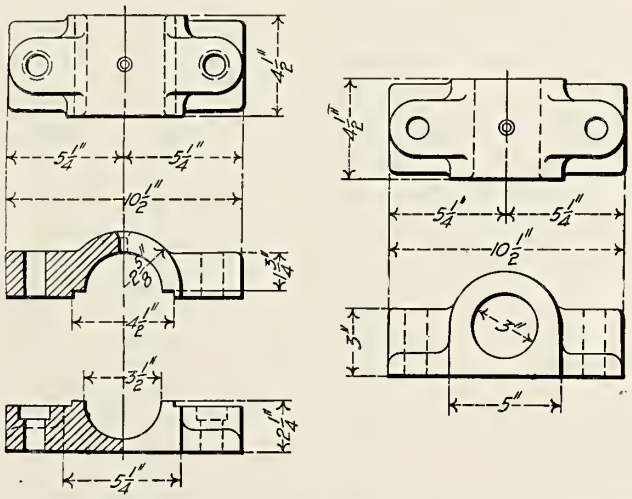

Fig. 761—Reverse Shaft Bearings for Consolidation (2-8-0) Locomotive; American Locomotive Company.

Numbers Refer to Names of Parts on Page 384.

Names of Parts of Reverse Lever and Details, Figs. 762-772.

1 *Quadrant*
2 *Reverse Lever Foot Rest*
3 *Quadrant Bracket*
4 *Quadrant Bracket Stud*
5 *Reverse Lever*
6 *Reverse Lever Latch*
7 *Reverse Lever Latch Connection*
8 *Reverse Lever Latch Handle*
9 *Reverse Lever Latch Spring*
10 *Reverse Lever Latch Stud Bolt*
13 *Reach Rod*
14 *Reach Rod Pin*
14a *Reach Rod Jaw*

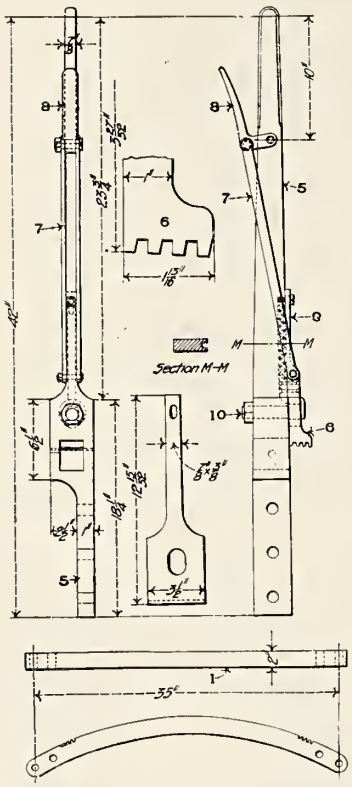

Fig. 762—Reverse Lever and Quadrant.

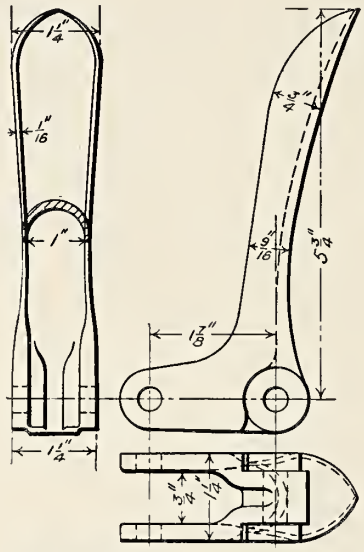

Fig. 763—Reverse Lever Latch Handle.

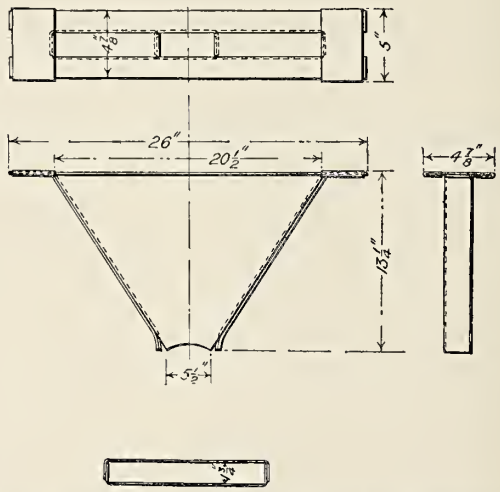

Fig. 764—Reverse Lever Guard for Atlantic Type (4-4-2) Locomotive; Pennsylvania Railroad.

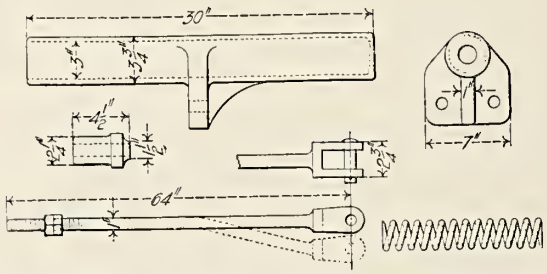

Fig. 765—Reverse Shaft Counterbalance Spring Details; American Locomotive Company.

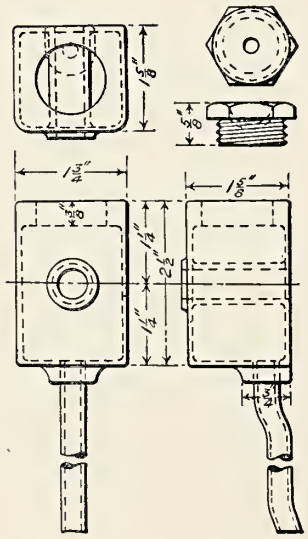

Fig. 766—Oil Cup for Link Motion of Atlantic Type (4-4-2) Locomotive; Pennsylvania Railroad.

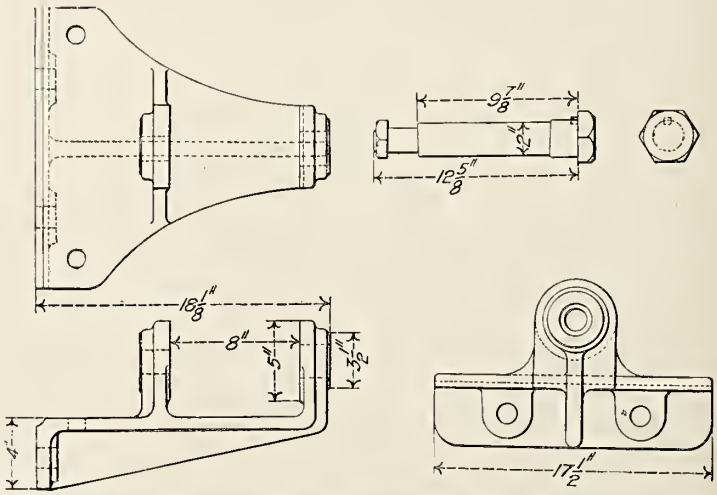

Fig. 767—Reverse Lever Fulcrum and Pin; American Locomotive Company.

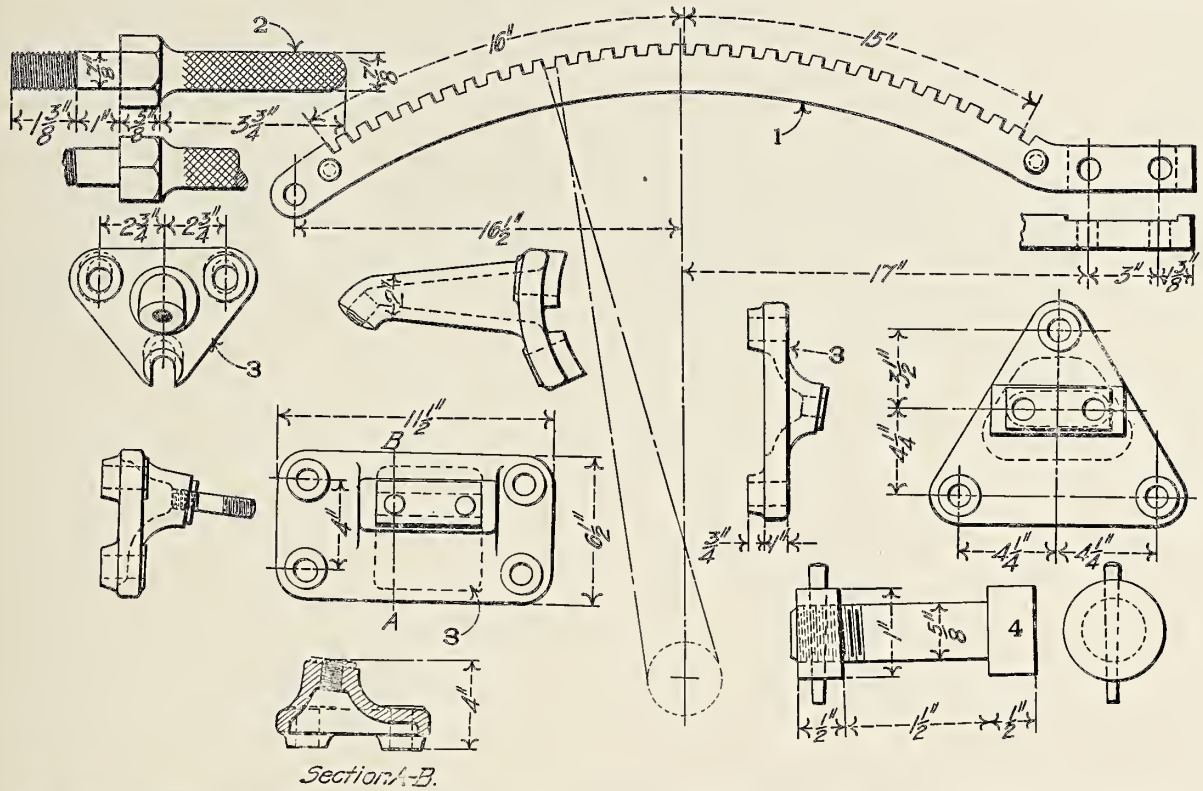

Fig. 768—Details of Reverse Lever Quadrant and Brackets for Atlantic Type (4-4-2) Locomotive; Pennsylvania Railroad.

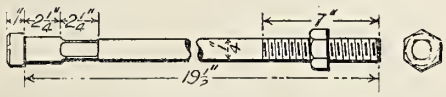

Fig. 769—Reverse Shaft Counterbalance Spring Rod.

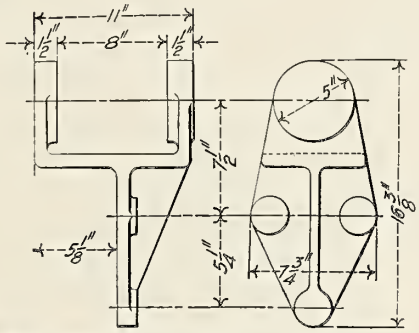

Fig. 770—Reverse Lever Fulcrum; American Locomotive Company.

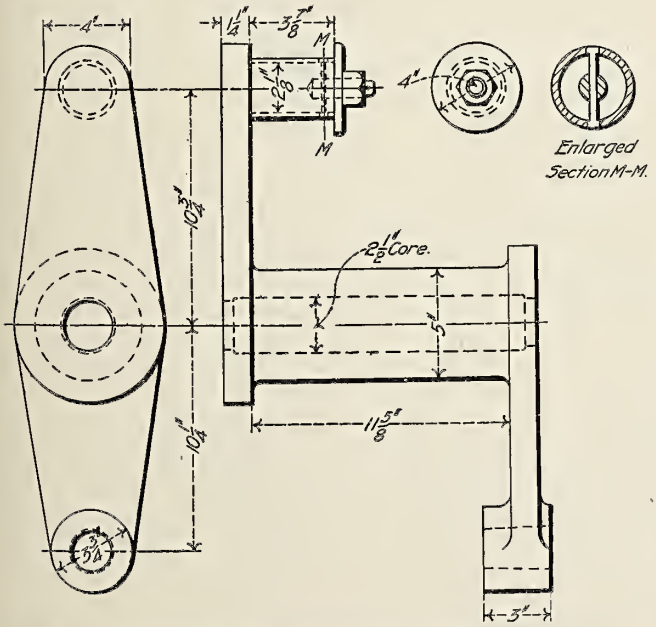

Fig. 771—Rocker for Consolidation (2-8-0) Locomotive; American Locomotive Company.

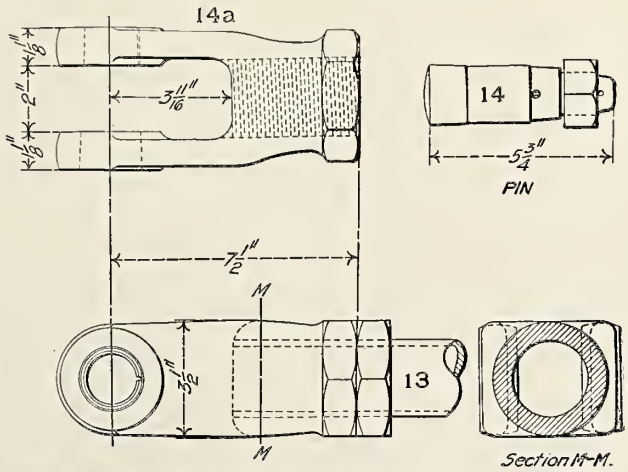

Fig. 772—Reach Rod Jaw and Pin; American Locomotive Company.

Numbers Refer to Names of Parts on Page 412.

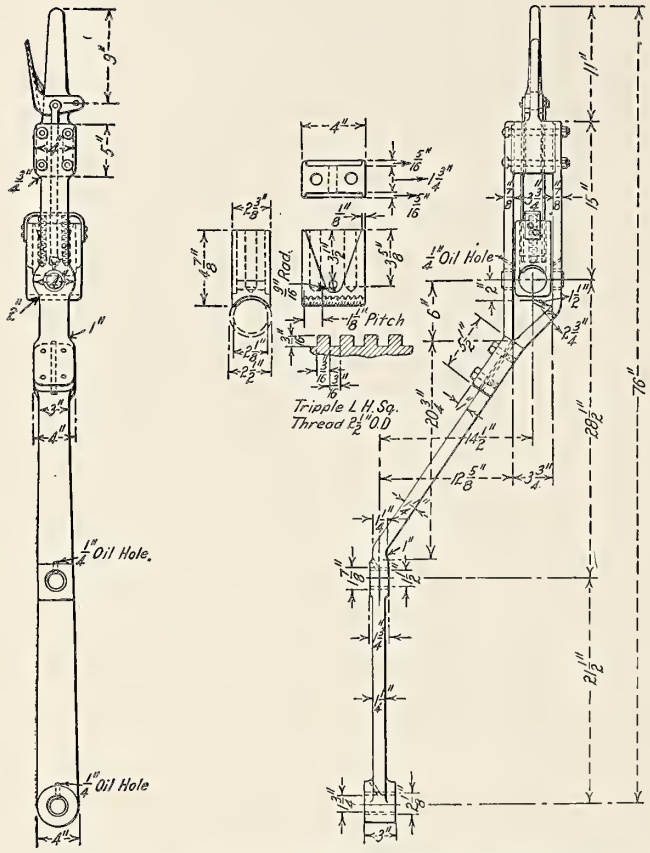

Fig. 773—Details of Reverse Lever for Atlantic Type (4-4-2) Inspection Locomotive; Philadelphia & Reading.

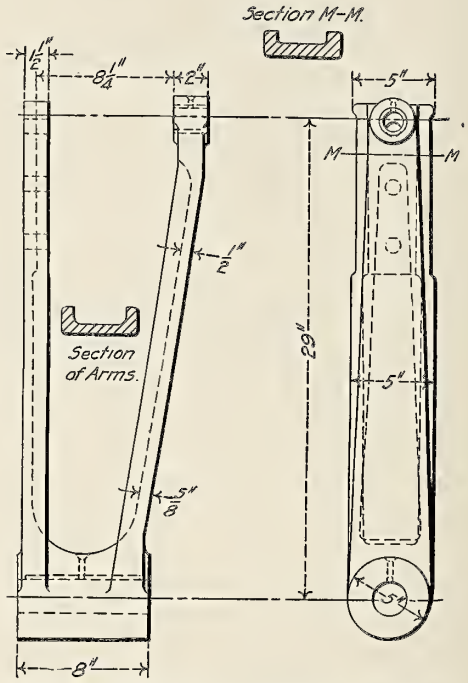

Fig. 774—Reverse Lever End; American Locomotive Company.

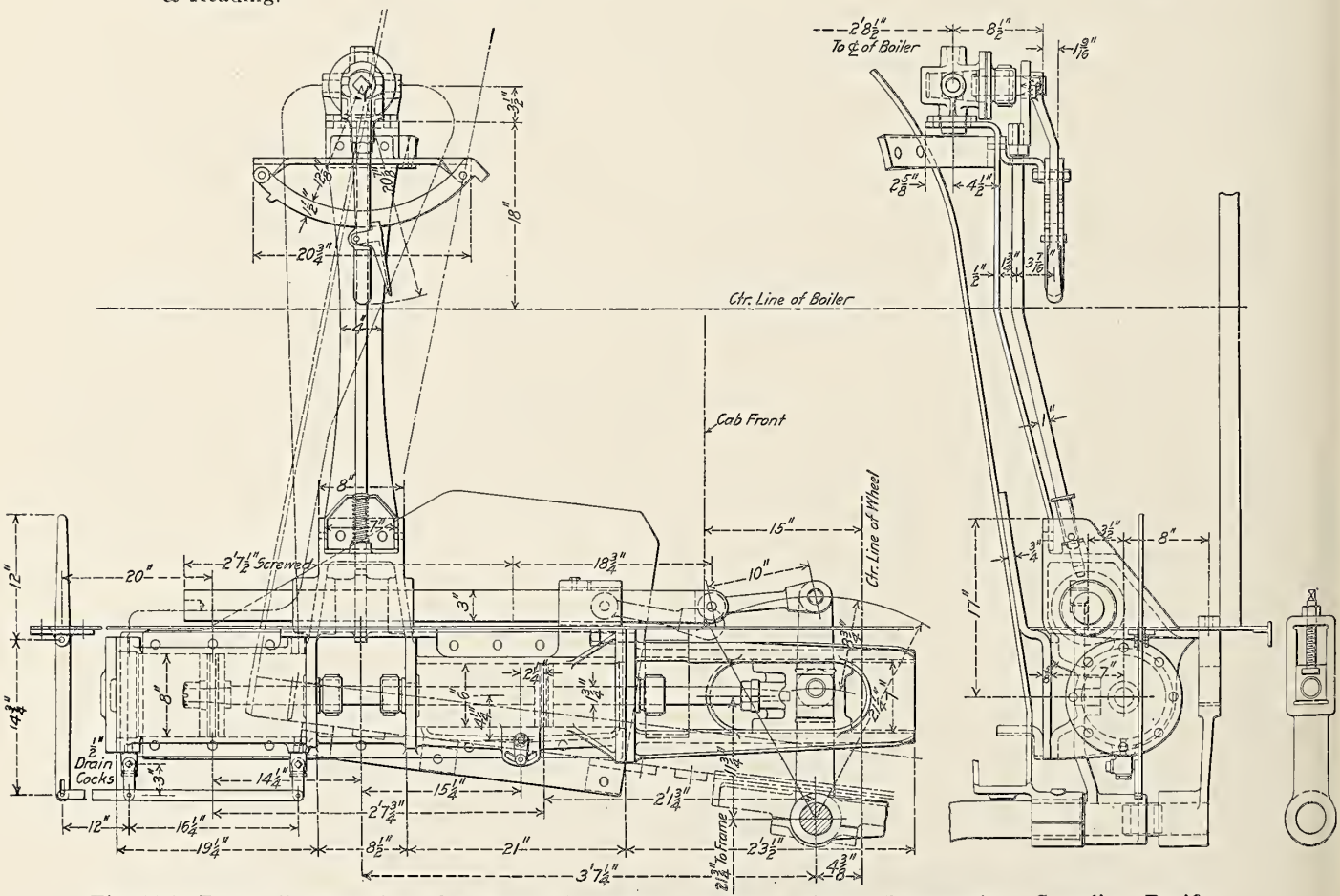

Fig. 775—Power Reverse Gear for Mallet Articulated (0-6-6-0) Simple Locomotive; Canadian Pacific.

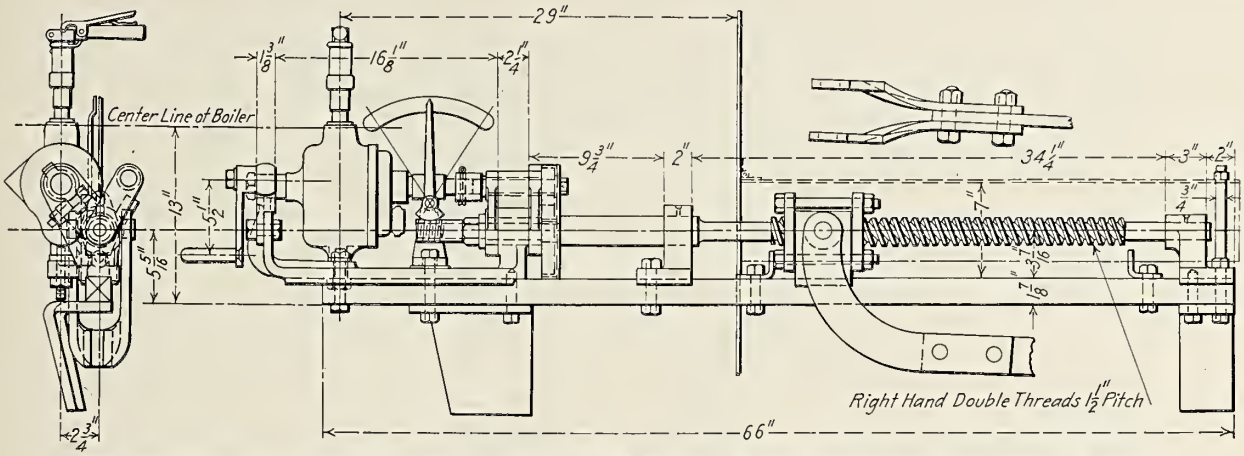

Fig. 776—Rushton Screw Reverse Gear Operated by Air Motor; Baldwin Locomotive Works.

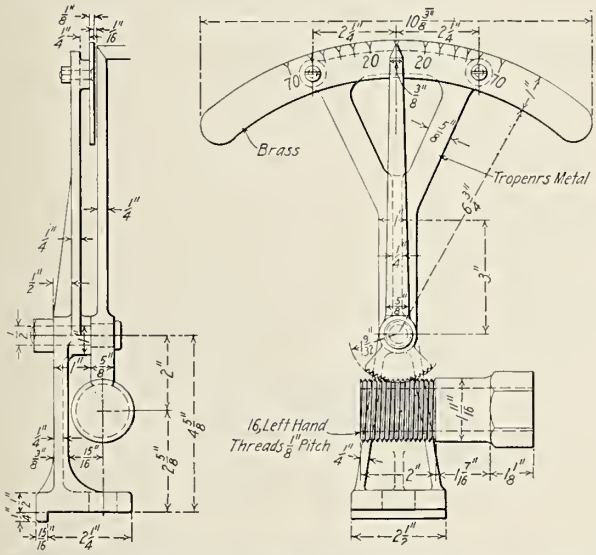

Fig. 777—Indicator of Rushton Power Reverse Gear; Baldwin Locomotive Works.

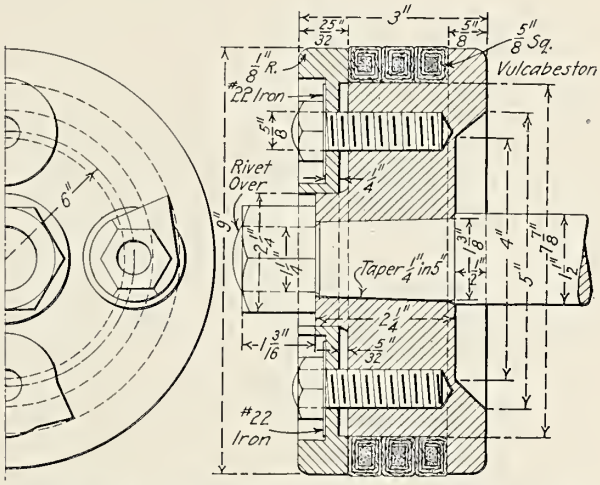

Fig. 778—Power Reverse Piston; H. W. Johns-Manville Company.

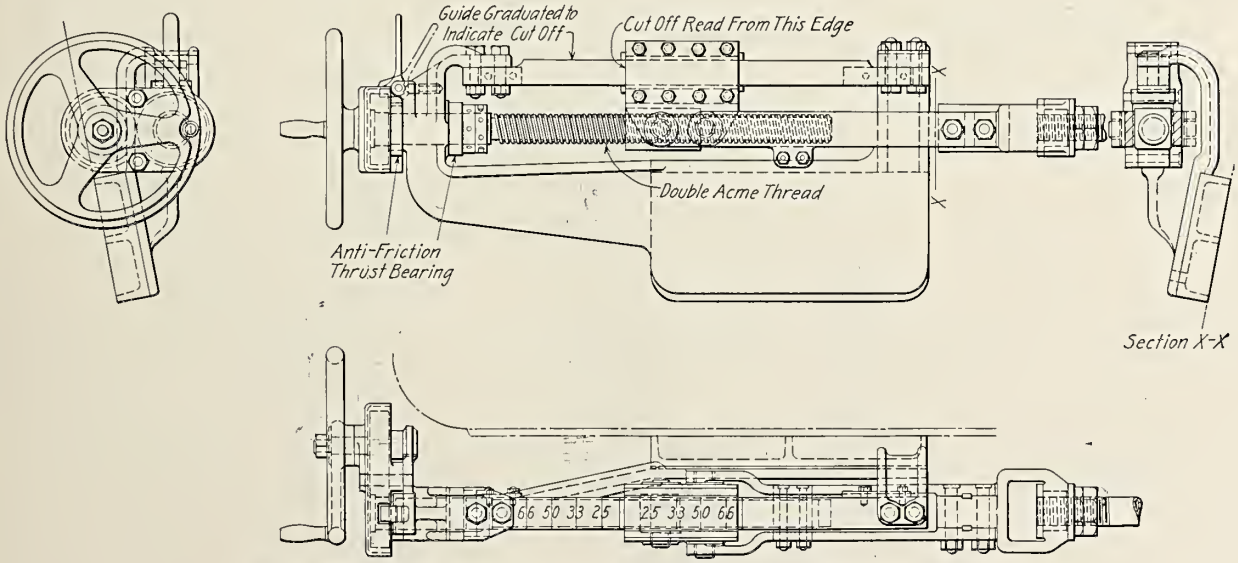

Fig. 779—Screw Reverse Gear; Lima Locomotive Corporation.

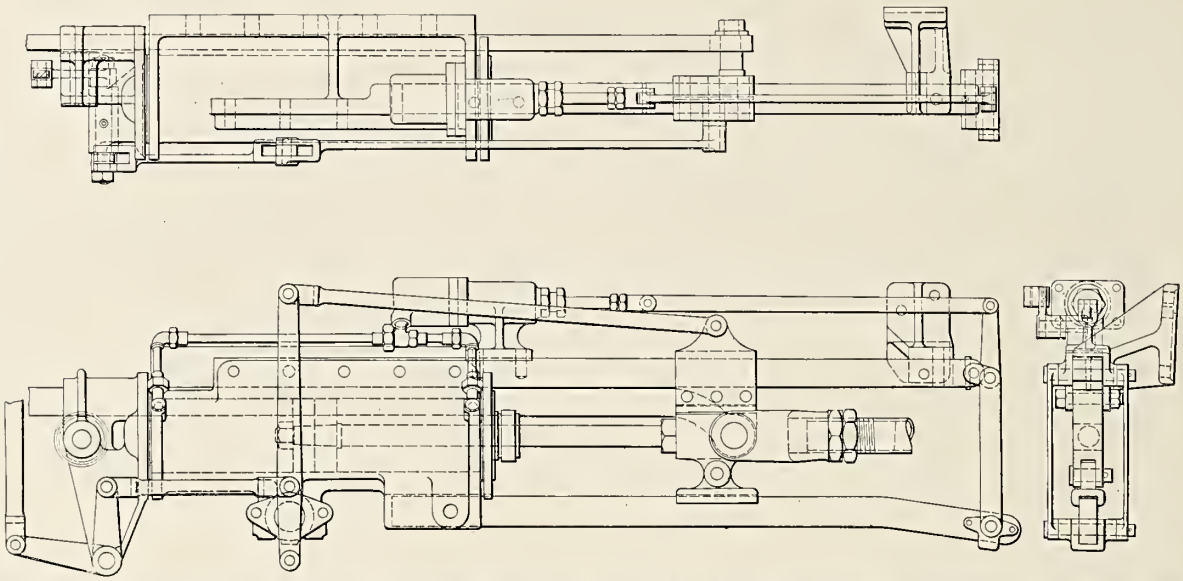

Fig. 780—Arrangement of Power Reverse Gear for Santa Fe Type (2-10-2) Locomotive. Built for the Chicago, Indianapolis & Louisville by the American Locomotive Company.

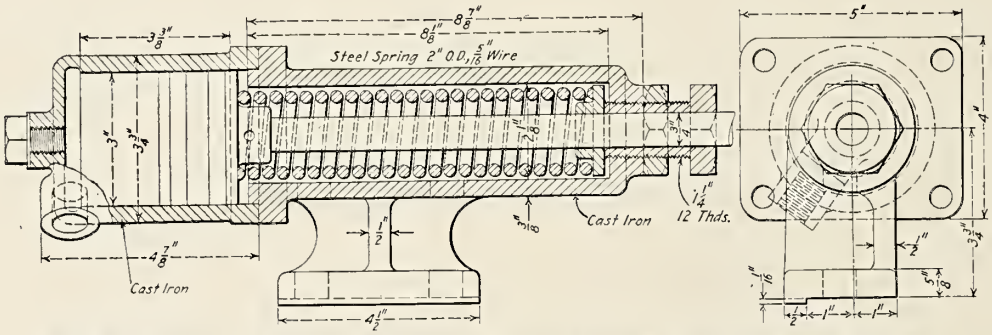

Fig. 781—Details of Brake Cylinder for Power Reverse Gear Shown in Fig. 780

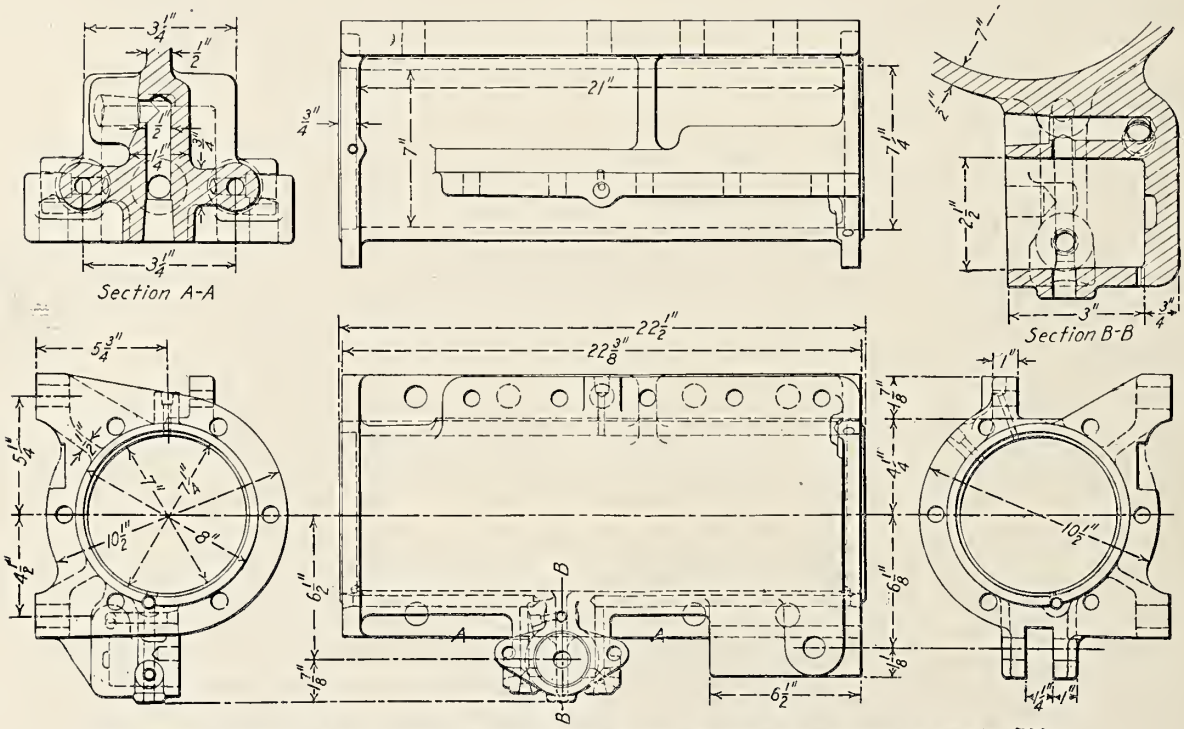

Fig. 782—Details of Reversing Cylinder for Power Reverse Gear Shown in Fig. 780.

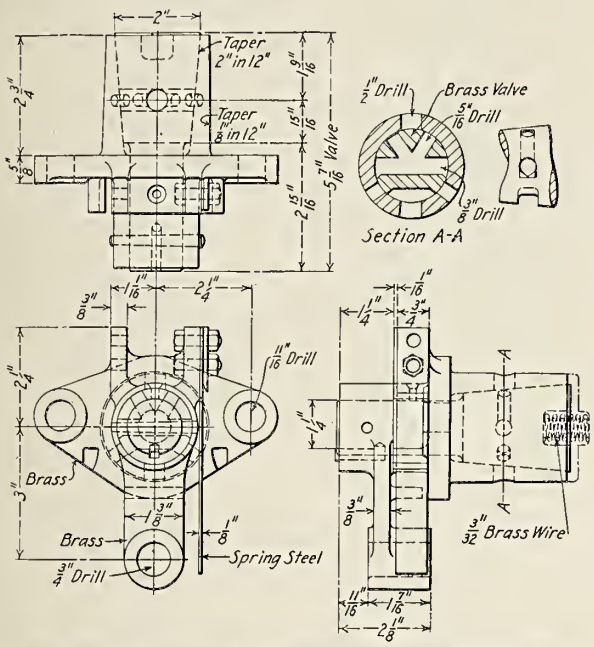

Fig. 783—Details of Reversing Valve for Power Reverse Gear Shown in Fig. 780.

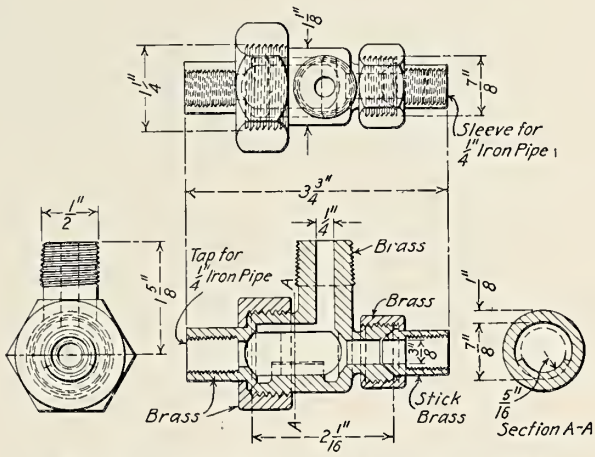

Fig. 784—Details of Brake Release Valve for Power Reverse Gear Shown in Fig. 780.

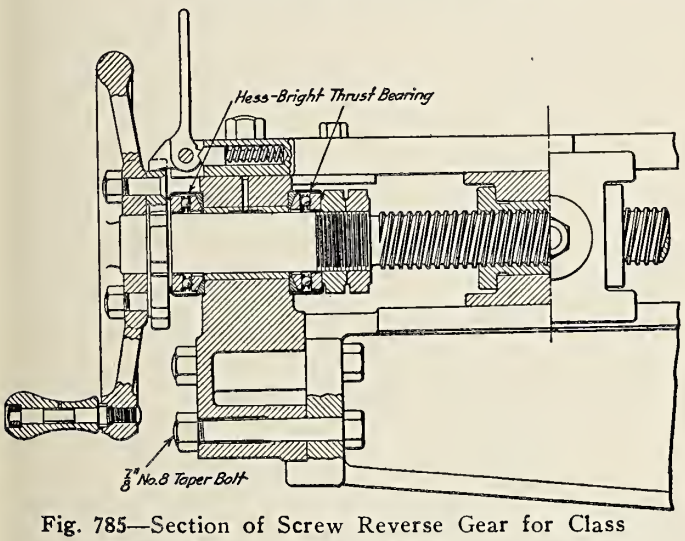

Fig. 785—Section of Screw Reverse Gear for Class E-6-s Atlantic Type (4-4-2) Locomotive; Pennsylvania Railroad.

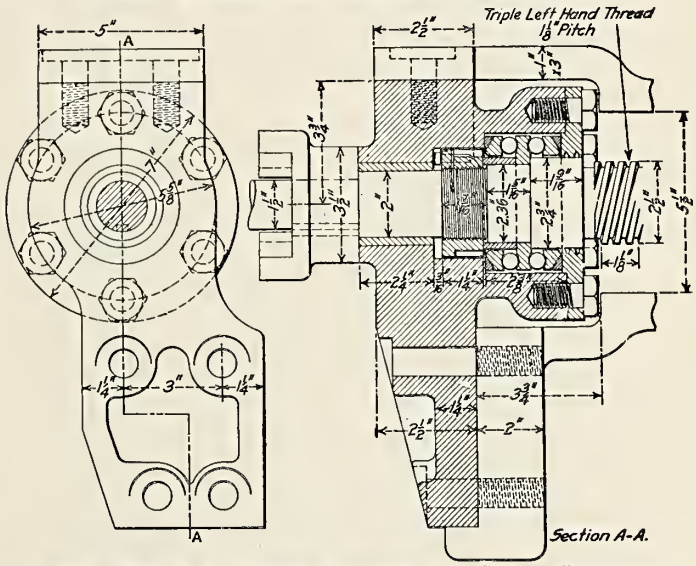

Fig. 786—Ball Thrust Bearing for Screw Reverse Gear Shown in Fig. 787.

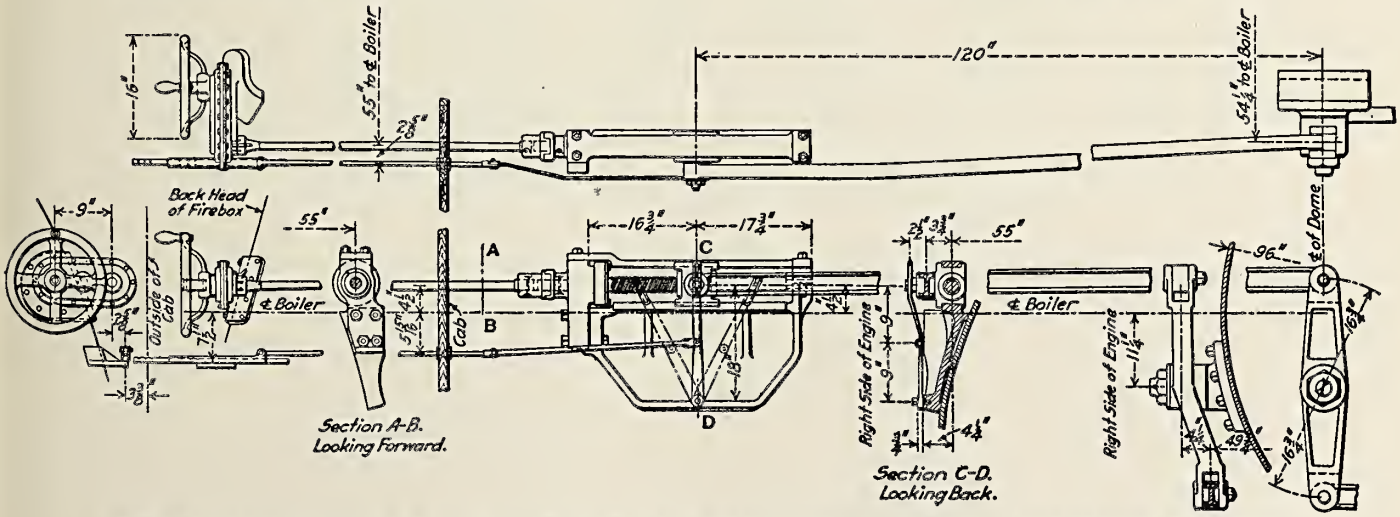

Fig. 787—Arrangement of Screw Reverse Gear for Mikado (2-8-2) Locomotive; Philadelphia & Reading.

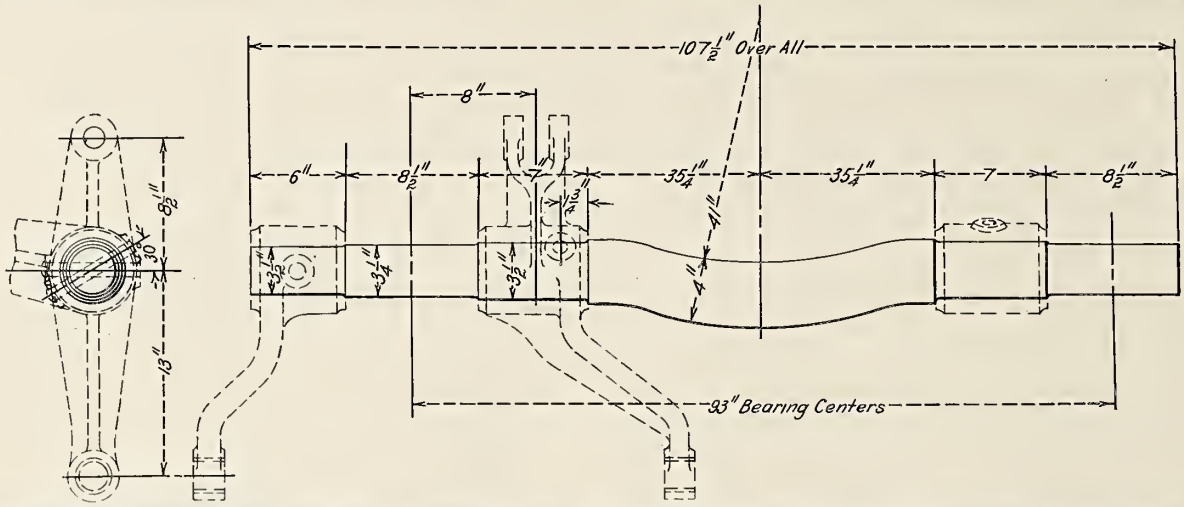

Fig. 788—Reverse Shaft for Power Reverse Gear on Mallet Articulated (2-6-6-2) Compound Locomotive. Built for the New York Central & Hudson River by the American Locomotive Company.

Names of Parts of Power Reverse, Fig. 789.

1 *Air Cylinder*
2 *Air Cylinder Head*
3 *Combined Air and Oil Cylinder Head*
4 *Air Cylinder Piston*
5 *Piston Packing*
6 *Piston Packing Retaining Ring*
7 *Stuffing Box Gland*
8 *Air or Reversing Cylinder Connecting Rod*
9 *Piston Rod*
10 *Oil Cylinder*
11 *Oil Cylinder Head*
12 *Oil Cylinder Piston*

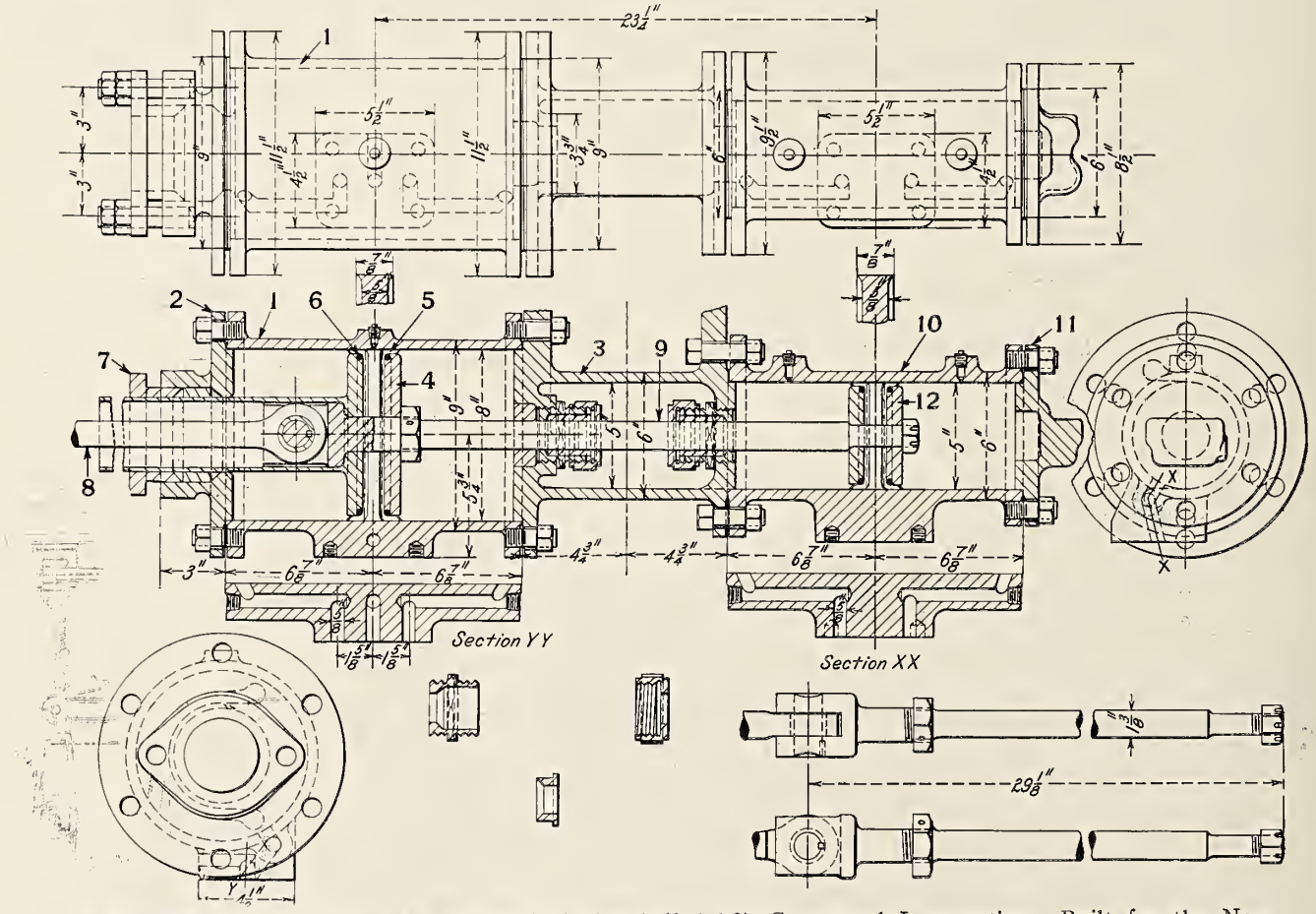

Fig. 789—Power Reverse for Mallet Articulated (2-6-6-2) Compound Locomotive. Built for the New York Central & Hudson River by the American Locomotive Company.

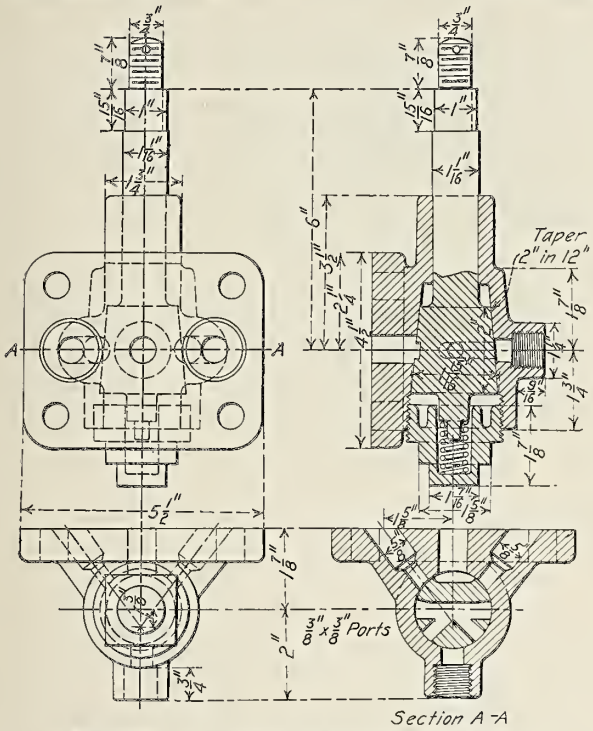

Fig. 790—Reversing Cylinder Air Valve.

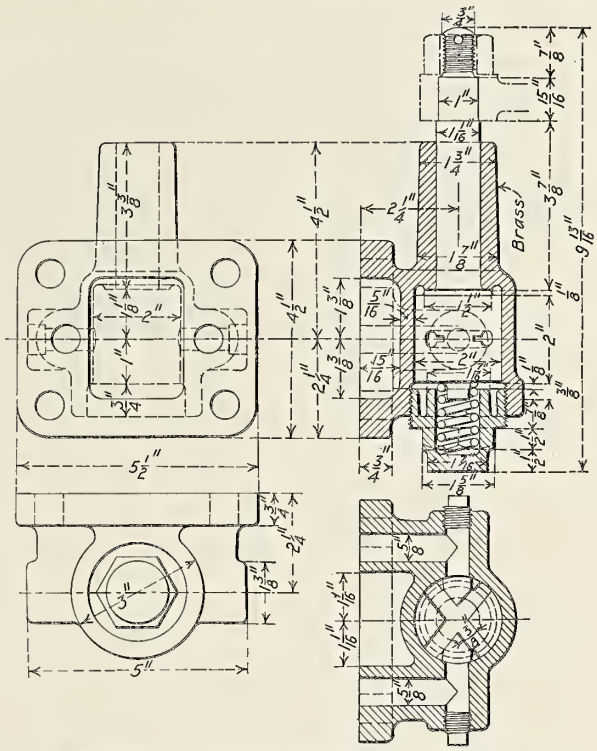

Fig. 791—Reversing Cylinder Oil Valve.

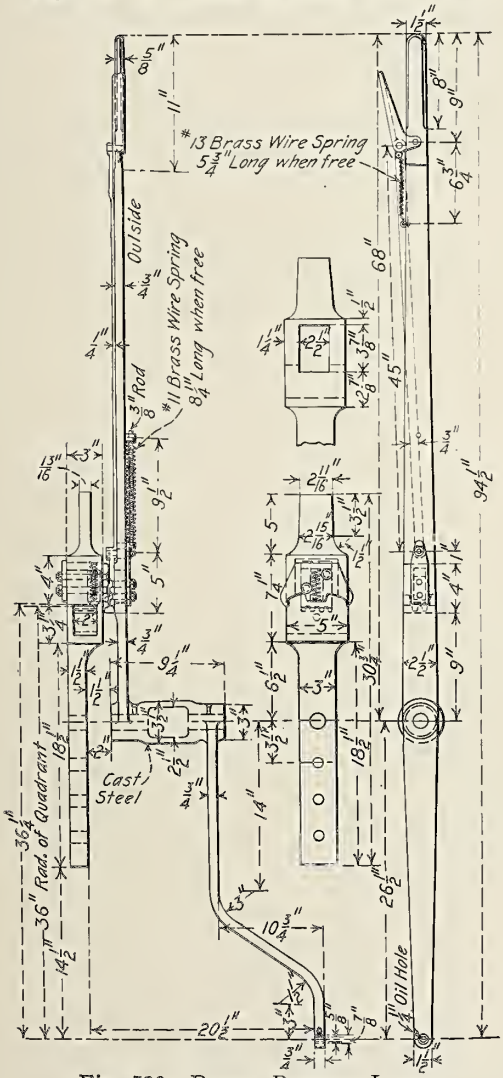

Fig. 793—Power Reverse Lever.

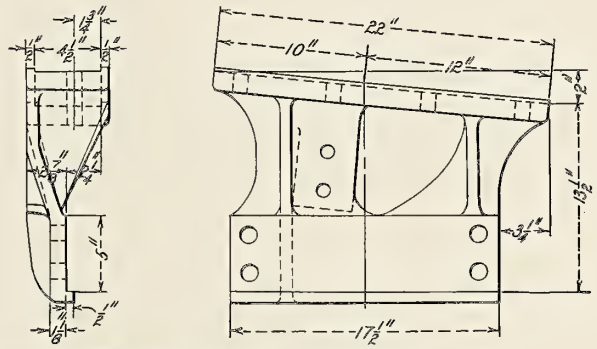

Fig. 792—Reversing Cylinder Support.

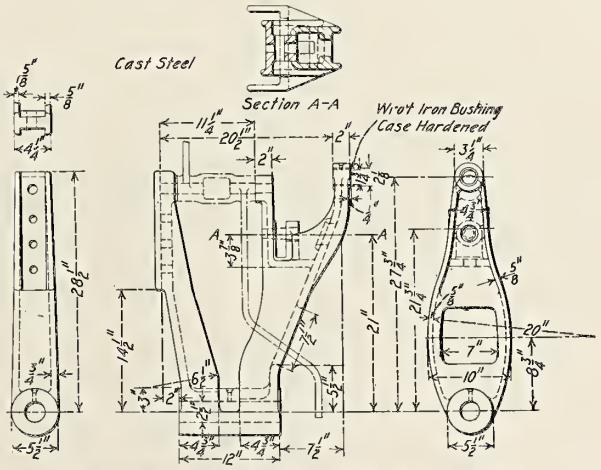

Fig. 794—Power Reverse Lever End.

Figs. 790-794 are Details of Power Reverse Gear for Mallet Articulated (2-6-6-2) Compound Locomotive. Built for the New York Central & Hudson River by the American Locomotive Company.

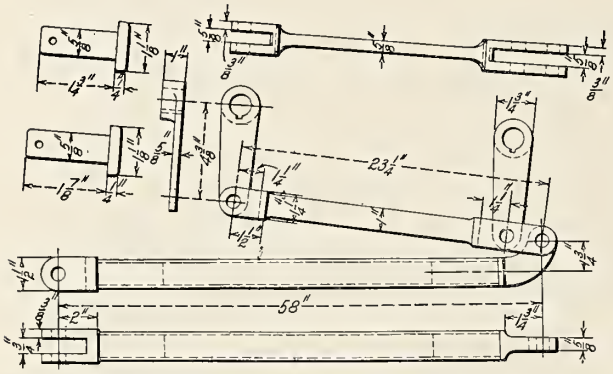

Fig. 795—Reversing Cylinder Crank Rod Connection.

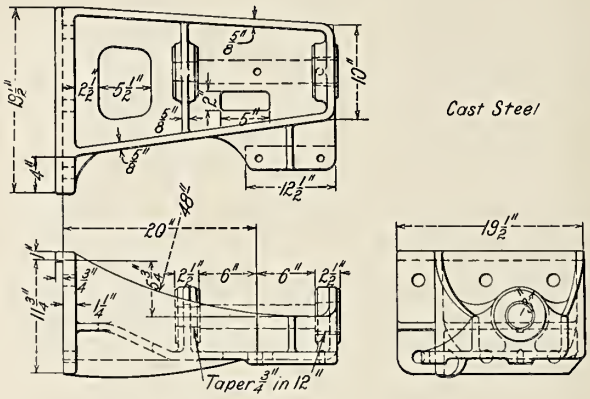

Fig. 796—Reverse Lever Fulcrum.

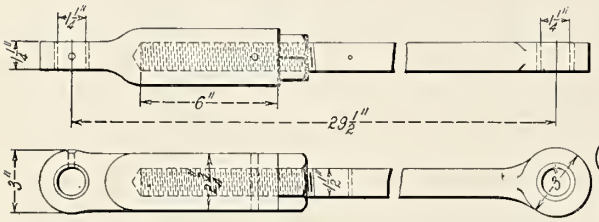

Fig. 797—Reversing Cylinder Connecting Rod.

Figs. 795-797 are Details of Power Reverse Gear for Mallet Articulated (2-6-6-2) Compound Locomotive. Built for the New York Central & Hudson River by the American Locomotive Company.

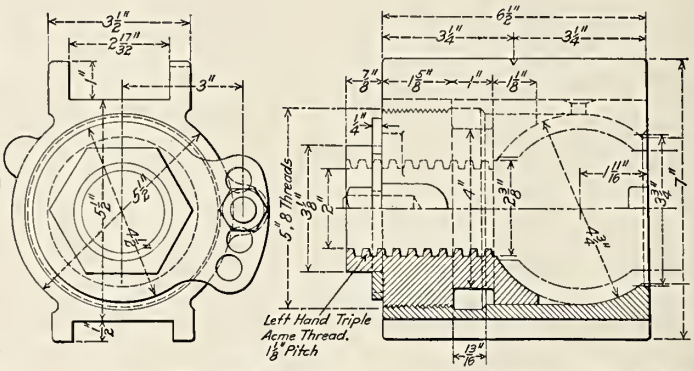

Fig. 798—Ball Joint on Screw Reverse Gear for Pacific Type (4-6-2) Locomotive. Built for the Lackawanna by the American Locomotive Company.

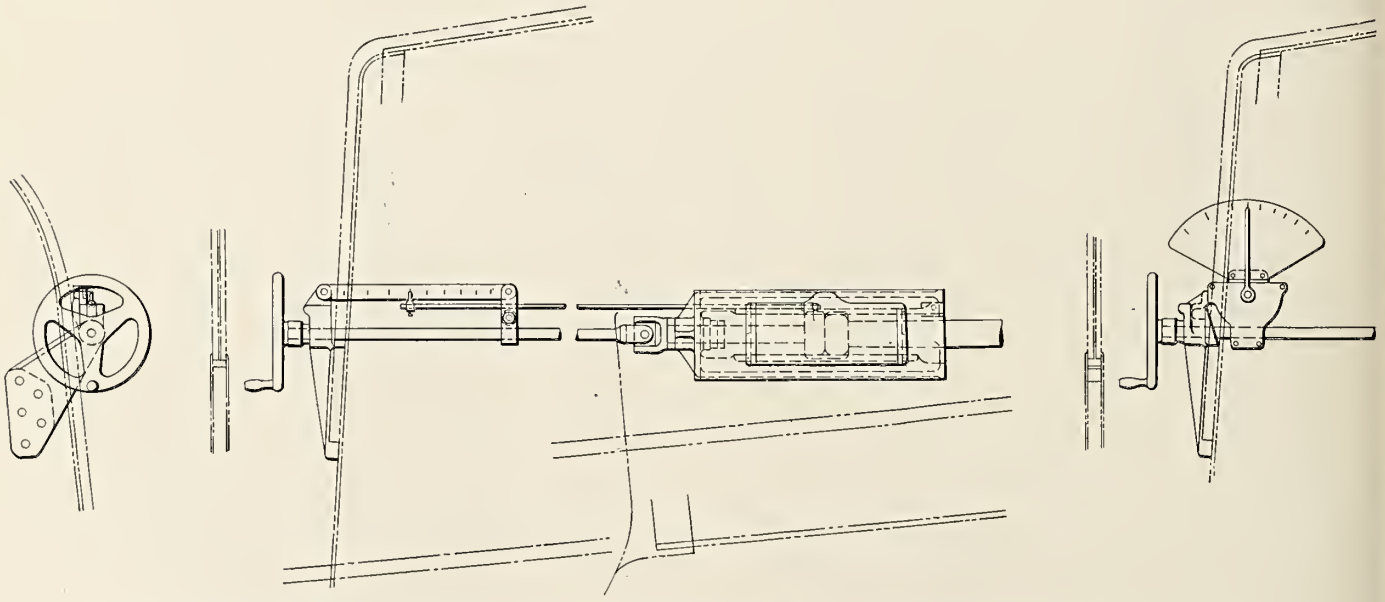

Fig. 799—Screw Reverse Gear for New York Central Class K-3 Locomotives; American Locomotive Company.

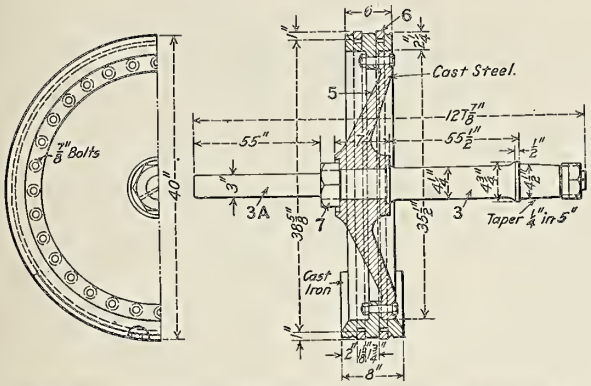

Fig. 800—Cast Steel Single Plate Piston and Rod.

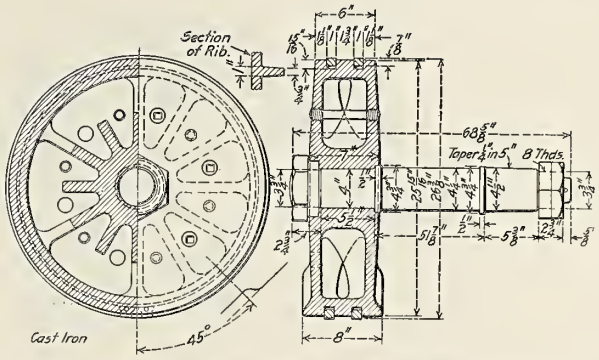

Fig. 801—Cast Iron Hollow Piston and Rod.

Figs. 800-801 are Pistons for Mallet Articulated (2-8-8-2) Compound Locomotive. Built for the Duluth, Missabe & Northern by the Baldwin Locomotive Works.

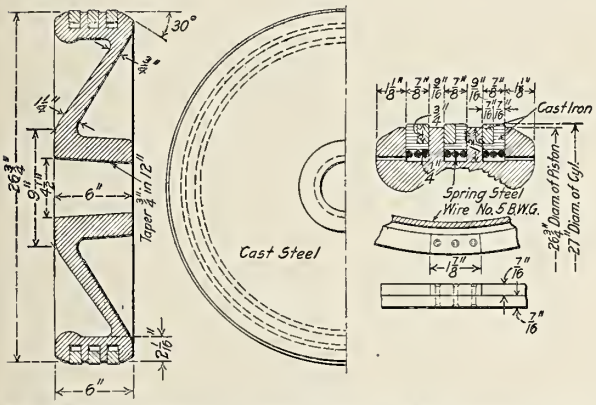

Fig. 802—Solid Single Plate Piston for Pacific Type (4-6-2) Locomotive No. 50,000; American Locomotive Company.

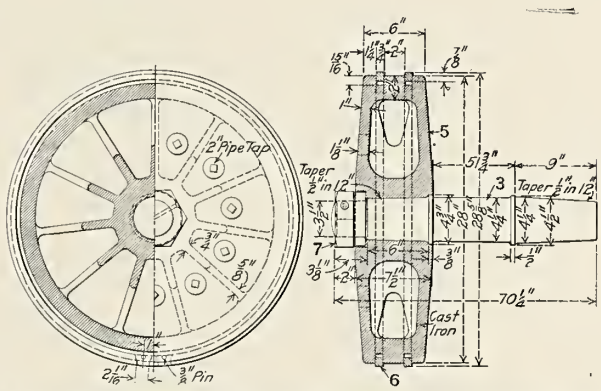

Fig. 803—Cast Iron Solid Double Plate Piston for Mikado (2-8-2) Locomotive. Built for the Great Northern by the Baldwin Locomotive Works.

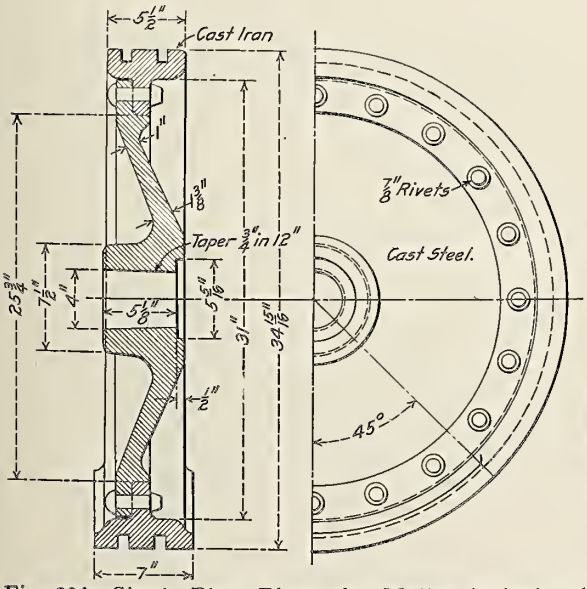

Fig. 804—Single Plate Piston for Mallet Articulated (2-6-6-2) Compound Locomotive. Built for the Norfolk & Western by the American Locomotive Company.

Names of Parts of Pistons, Figs. 800-809.

3 *Piston Rod*
3*A* *Piston Rod Extension*
4 *Piston Head*
5 *Piston*
6 *Piston Packing Ring*
7 *Piston Nut*

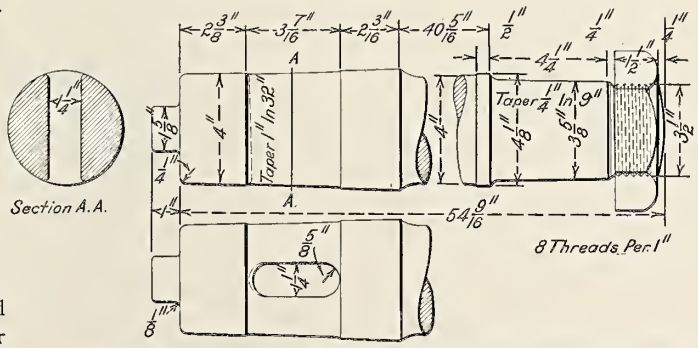

Fig. 805—Piston Rod for Class E6 Atlantic Type (4-4-2) Locomotive; Pennsylvania Railroad.

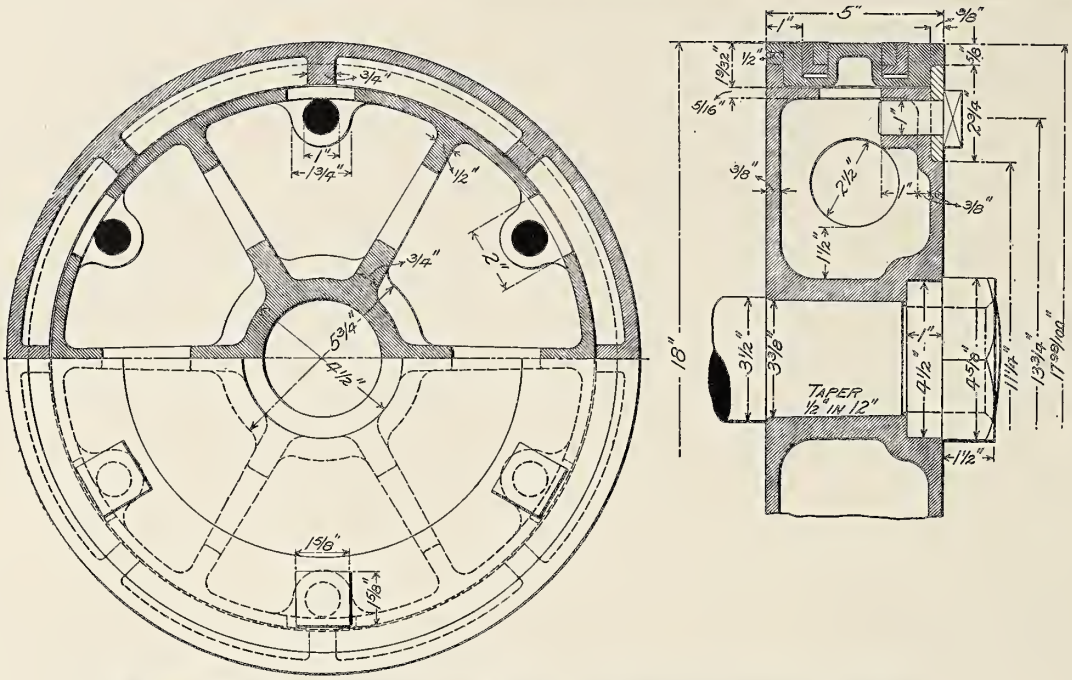

Fig. 806—Cast Iron Double Plate Piston; American Locomotive Company.

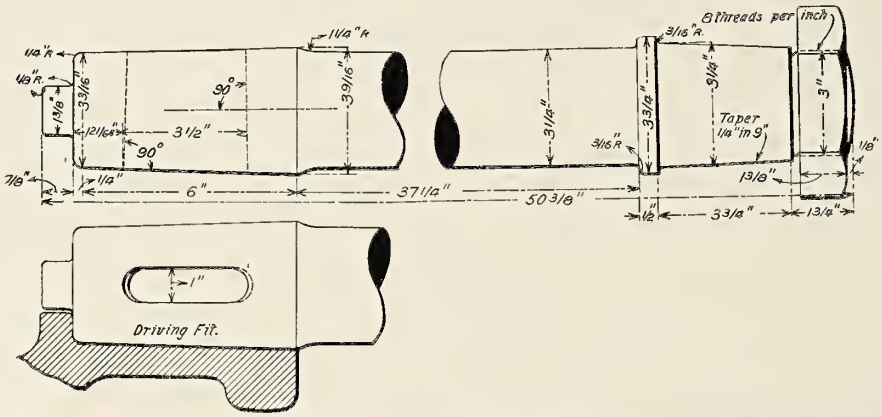

Fig. 807—Piston Rod for 18½ in. x 26 in. Cylinders; Pennsylvania Railroad.

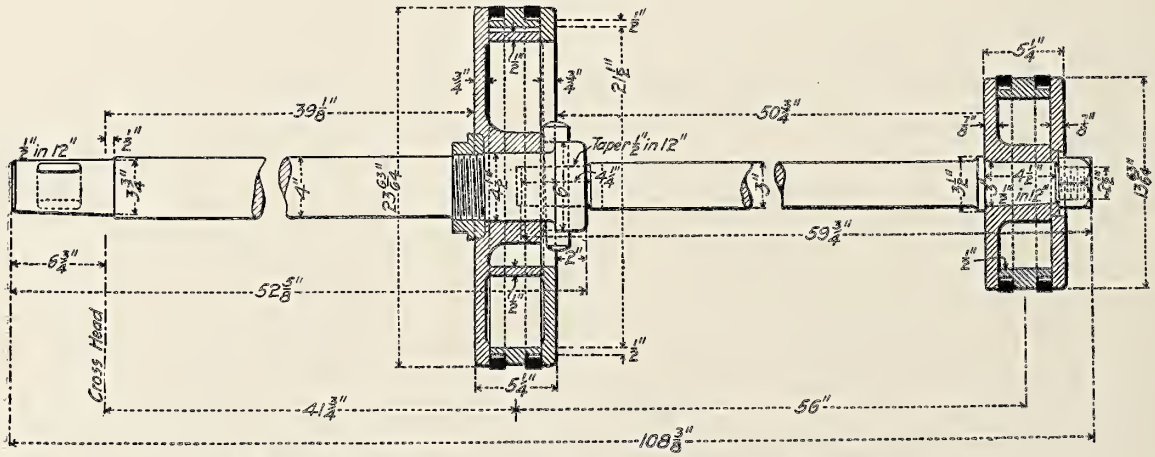

Fig. 808—Pistons and Rods for Tandem Compound Locomotive.

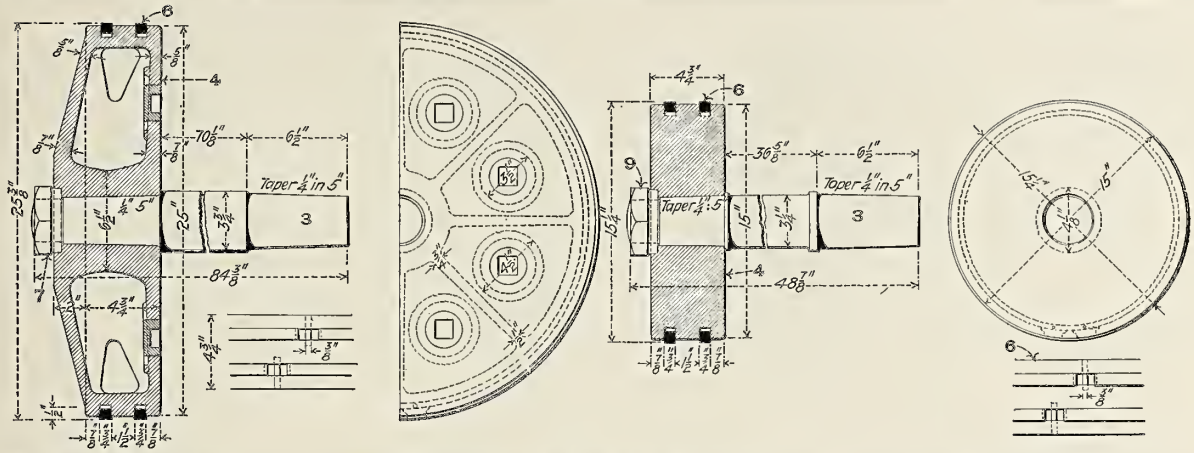

Fig. 809—High and Low Pressure Pistons and Rods for a Four-Cylinder Balanced Compound Locomotive; Baldwin Locomotive Works.

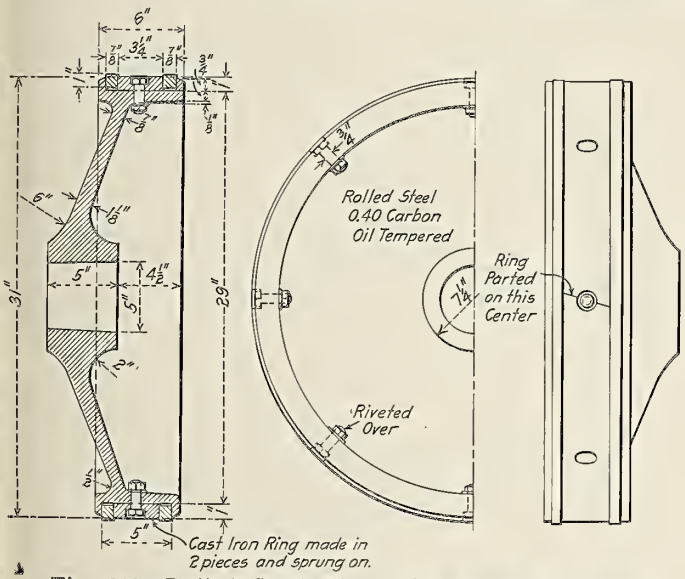

Fig. 810—Rolled Steel Piston for Santa Fe Type (2-10-2) Locomotive. Built for the Chicago, Burlington & Quincy by the Baldwin Locomotive Works.

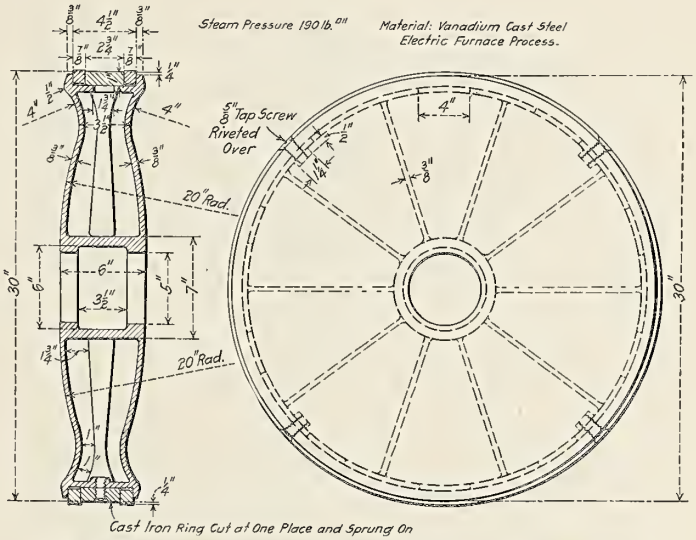

Fig. 811—Cast Steel Piston; Baldwin Locomotive Works.

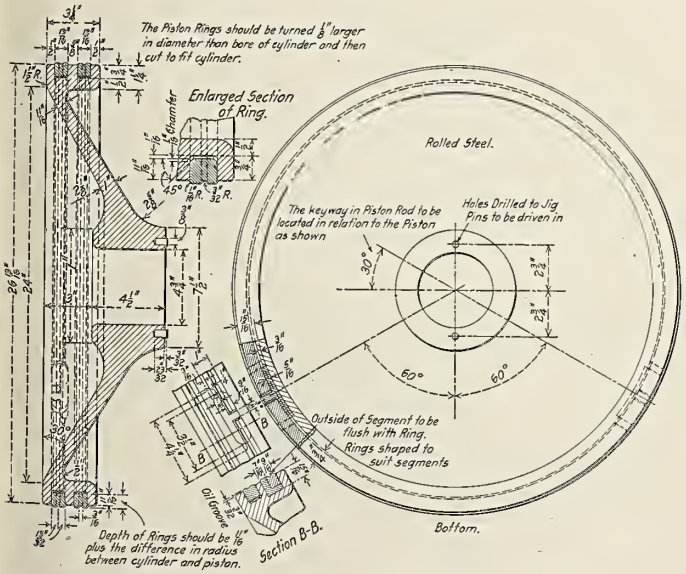

Fig. 812—Rolled Steel Piston for Class K-4-S Pacific Type (4-6-2) Locomotive; Pennsylvania Railroad.

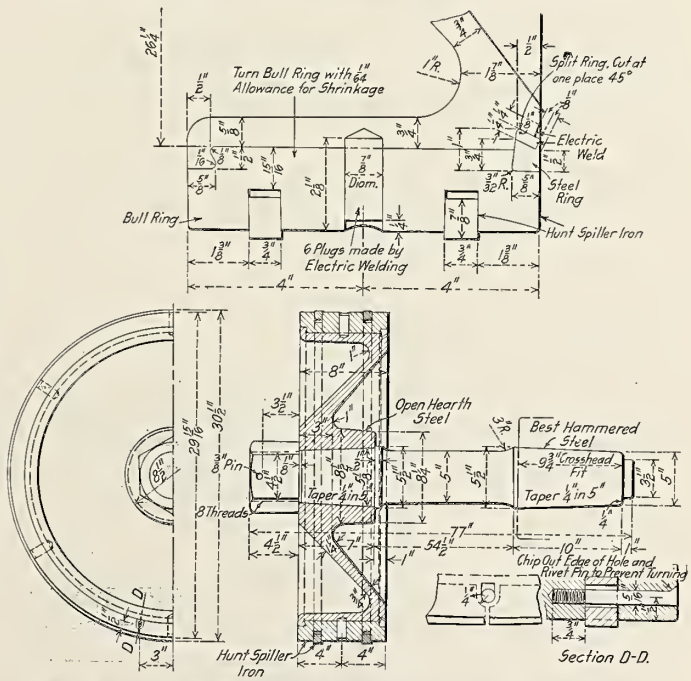

Fig. 813—Pressed Steel Piston; Baldwin Locomotive Works.

Numbers Refer to Names of Parts on Page 421.

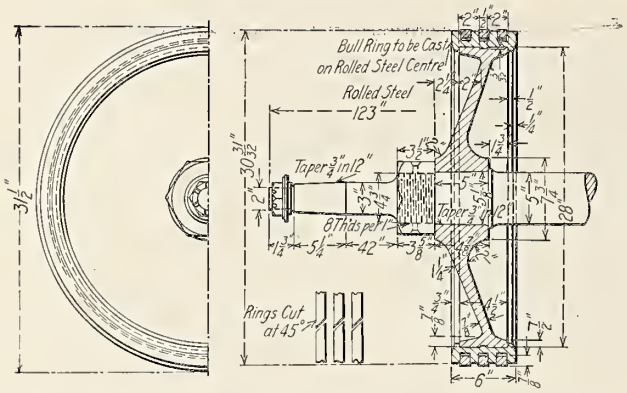

Fig. 814—Rolled Steel Piston; Standard Steel Works Company.

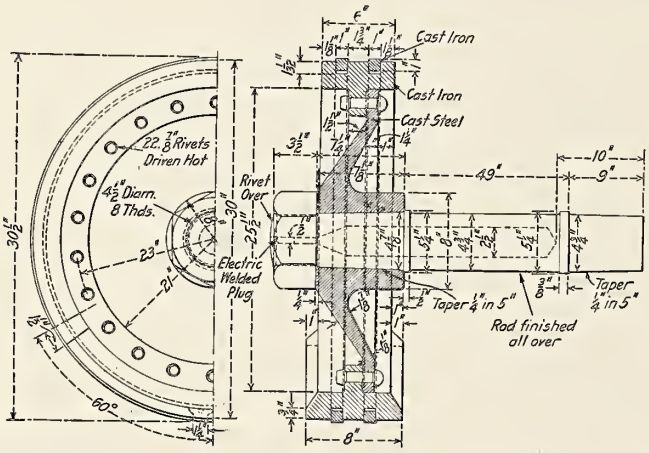

Fig. 816—Cast Steel Piston for Santa Fe Type (2-10-2) Locomotive. Built for the Chicago, Burlington & Quincy by the Baldwin Locomotive Works.

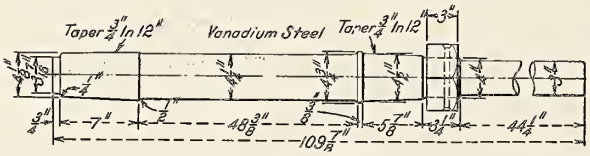

Fig. 818—Piston Rod with Front End Extension for Pacific Type (4-6-2) Locomotive No. 50,000; American Locomotive Company.

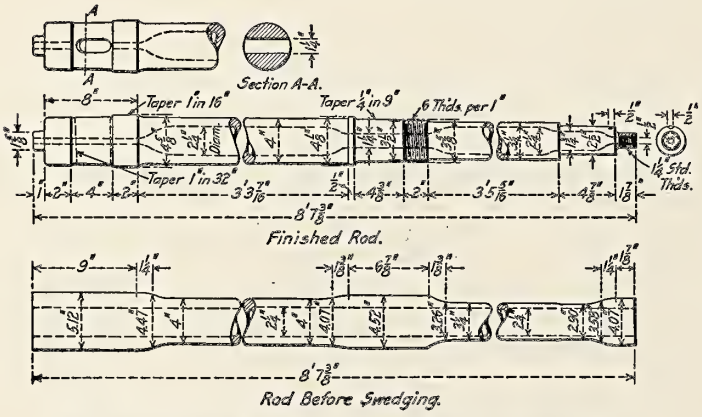

Fig. 819—Piston Rod for Class E-6-S Atlantic Type (4-4-2) Locomotive; Pennsylvania Railroad.

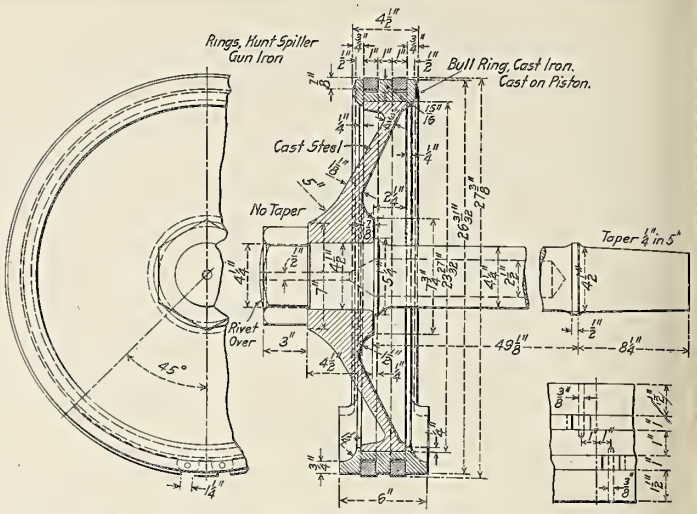

Fig. 815—Cast Steel Piston for Pacific Type (4-6-2) Locomotive. Built for the Chicago, Burlington & Quincy by the Baldwin Locomotive Works.

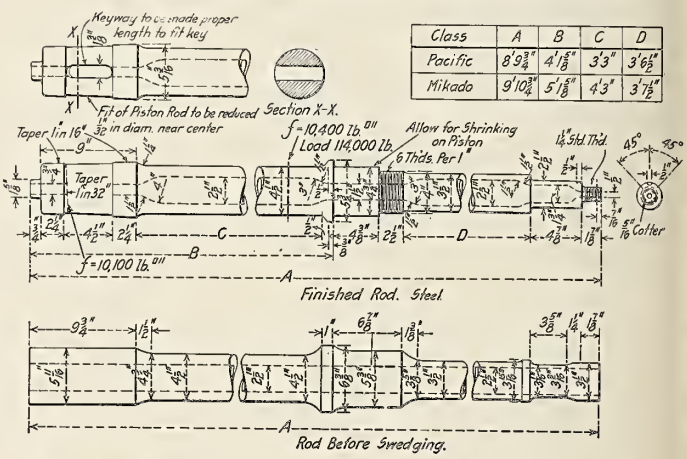

Class	A	B	C	D
Pacific	8'9 3/4"	4'1 5/8"	3'3"	3'6 1/2"
Mikado	9'10 3/4"	5'1 5/8"	4'3"	3'7 1/2"

Fig. 817—Piston Rod for Pacific Type (4-6-2) and Mikado (2-8-2) Locomotives; Pennsylvania Railroad.

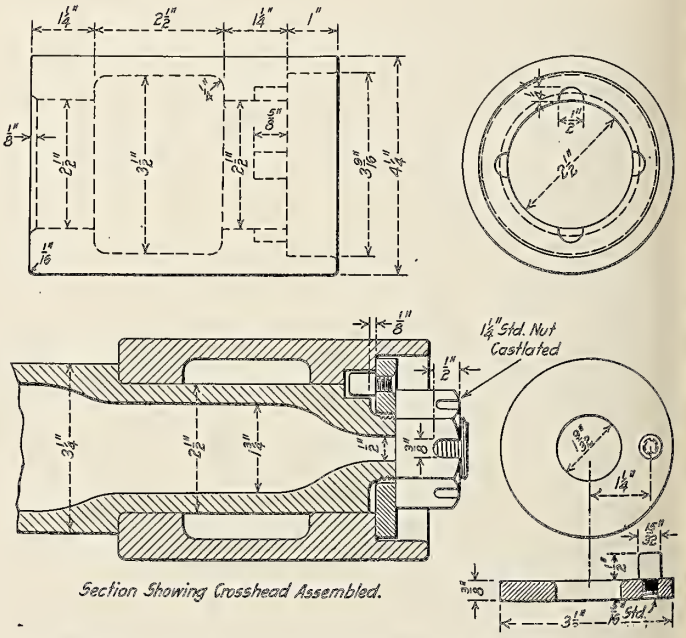

Fig. 820—Extended Piston Rod Shoe for Class K-4-S Pacific Type (4-6-2) Locomotive; Pennsylvania Railroad.

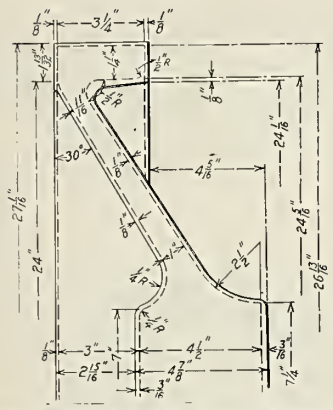

Fig. 821—Rolled Steel Piston; Carnegie Steel Company.

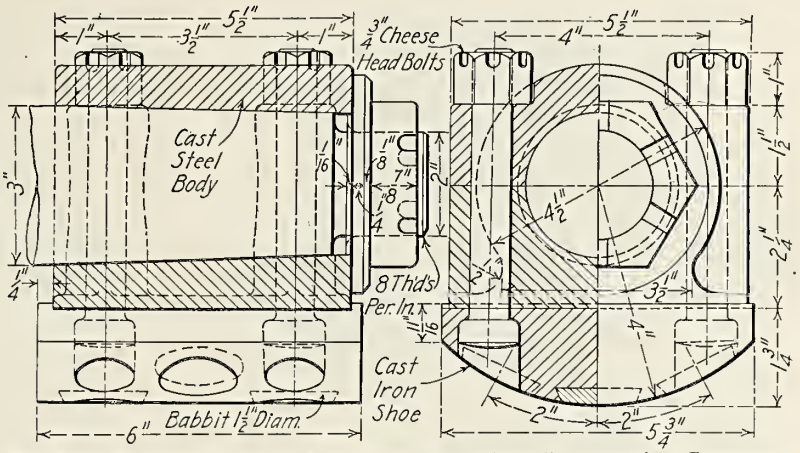

Fig. 822—Extended Piston Rod Shoe; American Locomotive Company.

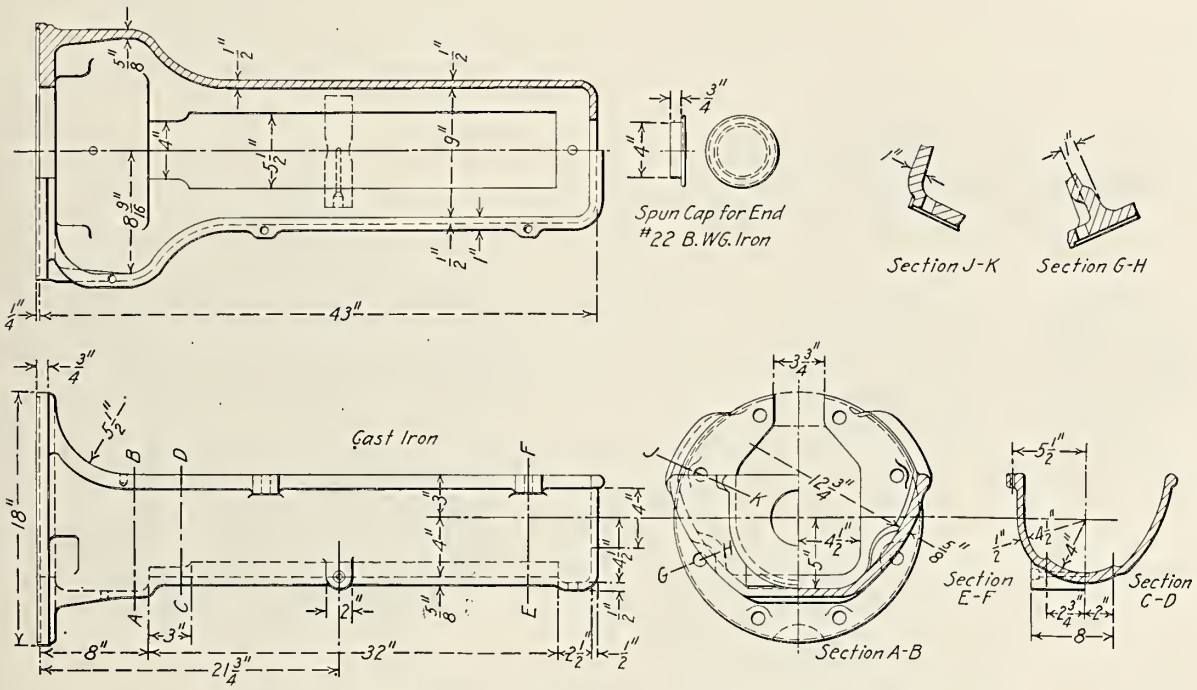

Fig. 823—Extended Piston Rod Guide; American Locomotive Company.

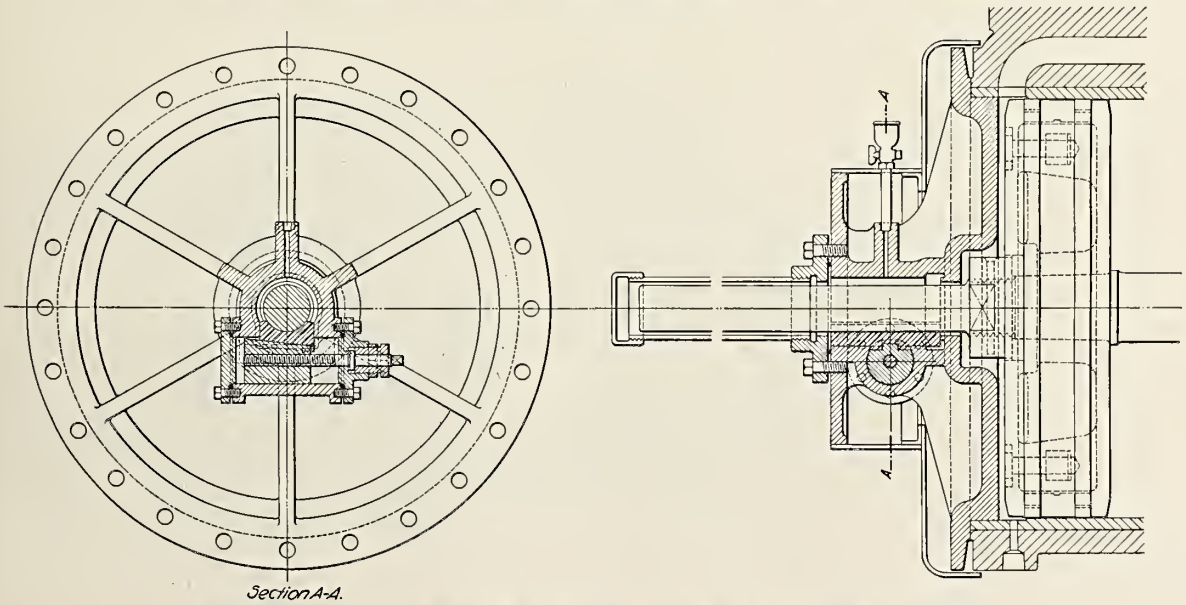

Fig. 824—Extended Piston Rod Guide; Baldwin Locomotive Works.

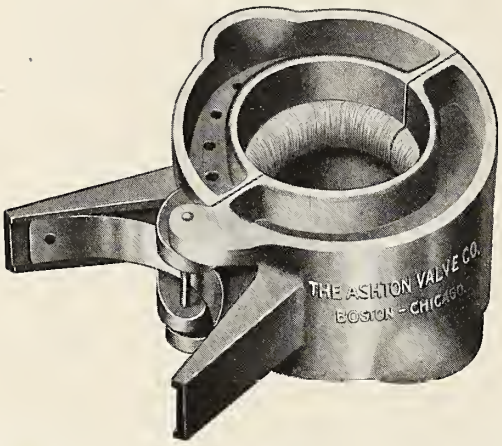

Fig. 825—Piston Rod Swab; Ashton Valve Company.

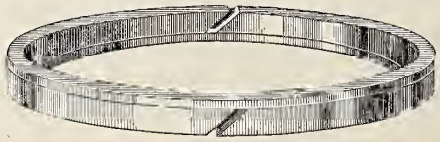

Fig. 826—Leak Proof Piston Packing Ring; McQuay-Norris Manufacturing Company.

Fig. 827—Segment of Crescent Metallic Packing; Harry Vissering & Company.

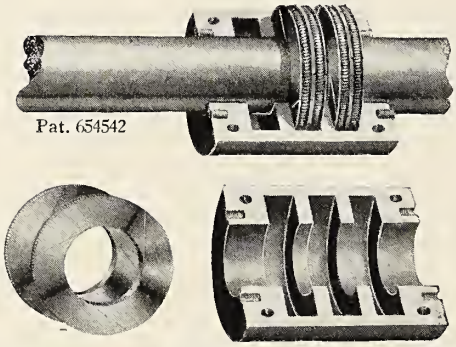

Fig. 828—Metallic Valve Stem Packing; Holmes Metallic Packing Company.

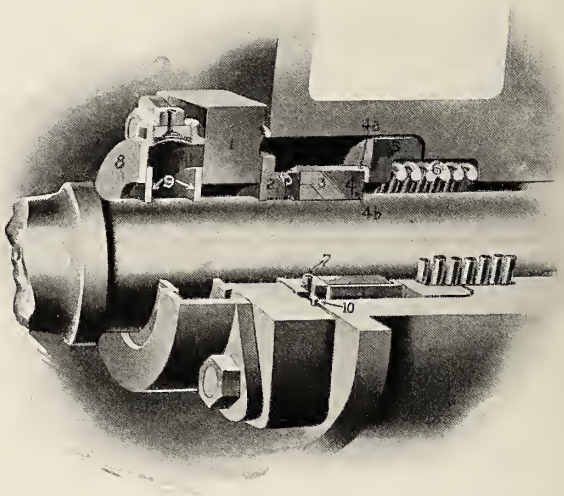

Fig. 829—Crescent Metallic Piston Rod Packing; Harry Vissering & Company.

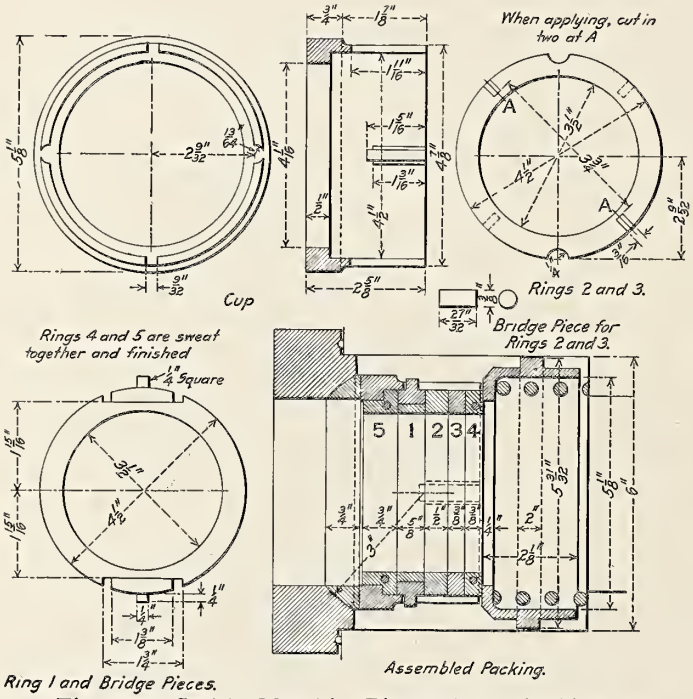

Fig. 830—Smith Metallic Piston Rod Packing as Applied to a Wabash Locomotive.

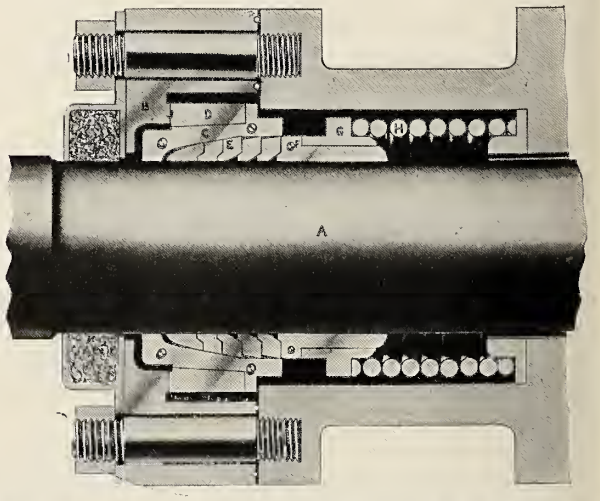

Fig. 831—Jerome Type Metallic Piston Rod Packing; Jerome-Edwards Metallic Packing Company.

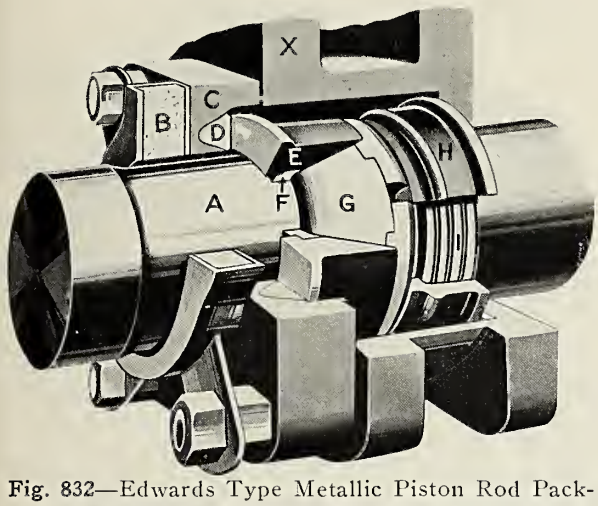

Fig. 832—Edwards Type Metallic Piston Rod Packing; Jerome-Edwards Metallic Packing Company.

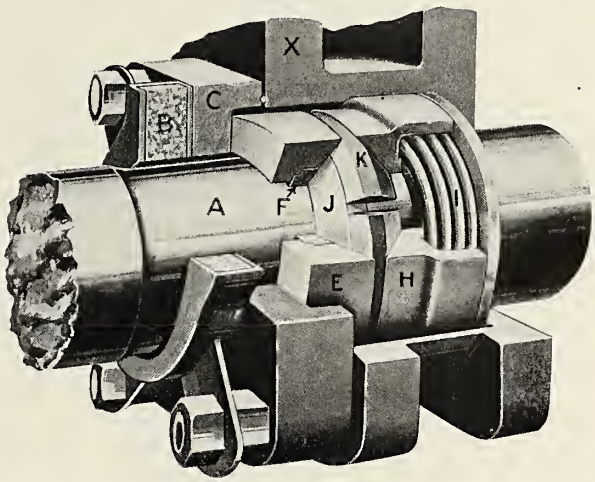

Fig. 833—Sullivan Type Metallic Piston Rod Packing Jerome-Edwards Metallic Packing Company.

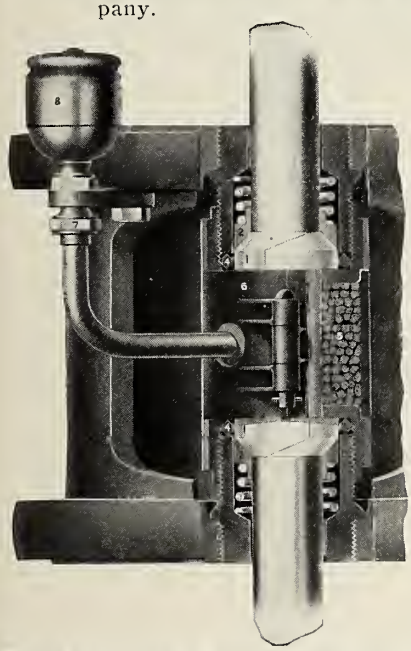

Fig. 834—King Type Metallic Air Pump Piston Rod Packing; The United States Metallic Packing Company.

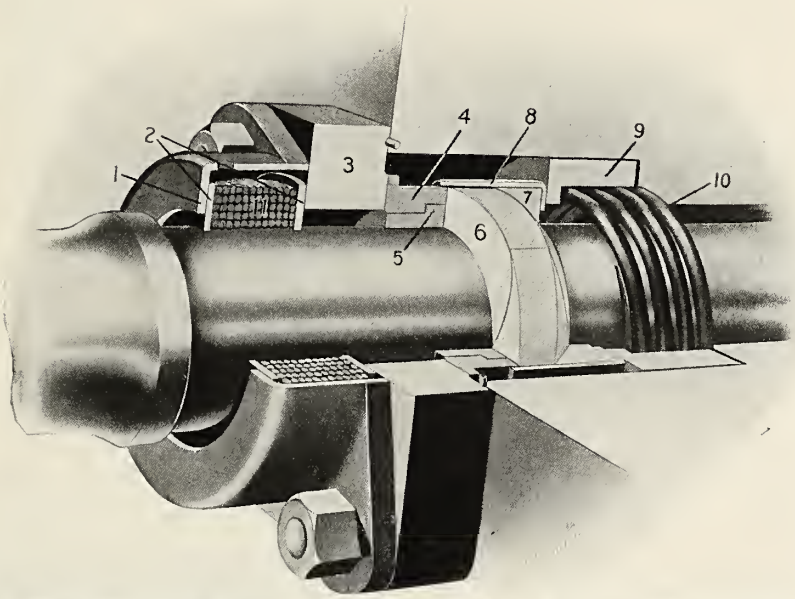

Fig. 835—King Type Metallic Piston Rod Packing; The United States Metallic Packing Company.

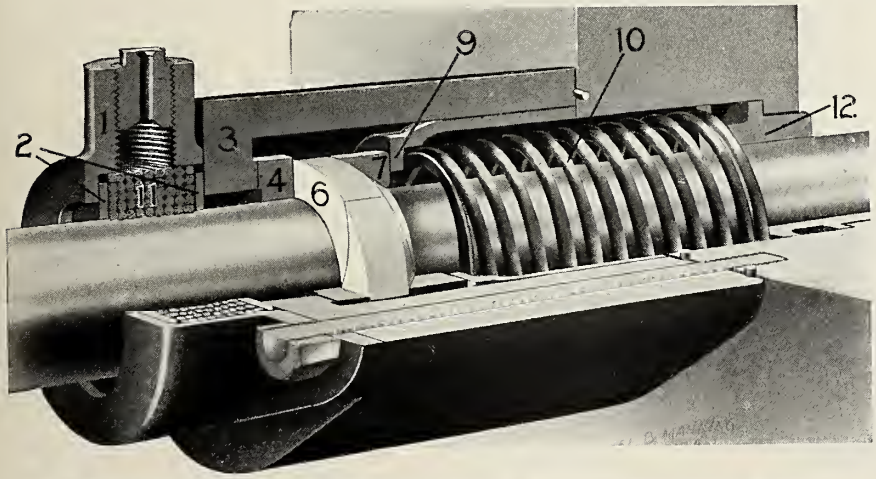

Fig. 836—King Type Metallic Valve Stem Packing; The United States Metallic Packing Company.

Names of Parts of King Packing, Figs. 835-836.

1 *Swab Holder*
2 *Swab Holder Disc*
3 *Gland*
4 *Sliding Plate Ring*
5 *Sliding Plate Half Pieces*
6 *King Packing Ring*
7 *Retainer Half Pieces*
8 *Retainer Shell*
9 *Preventer*
10 *Spring*
11 *Swab*

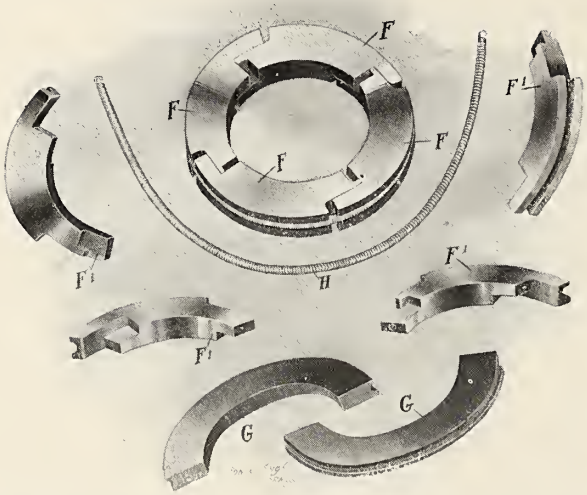

Fig. 837—L. & K. Metallic Packing Rings; Aurora Metal Company.

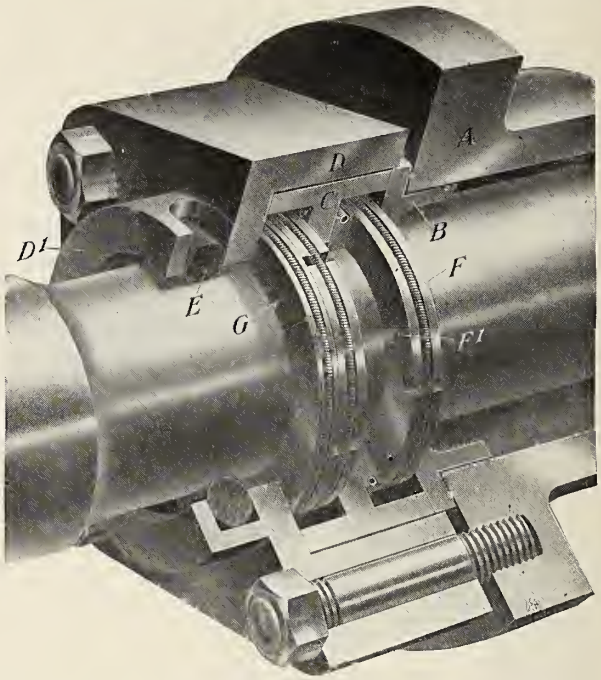

Fig. 838—L. & K. Metallic Piston Rod Packing; Aurora Metal Company.

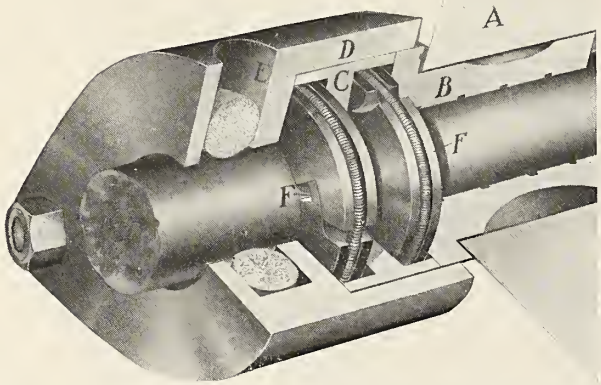

Fig. 839—L. & K. Metallic Valve Stem Packing; Aurora Metal Company.

Names of Parts of L. & K. Packing. Figs. 837-839.

- A *Cylinder Head*
- B *Stuffing Box Bushing*
- C *Tee Ring*
- D *Gland*
- D1 *Swab Holder*
- E *Swab*
- F *Packing Segment*
- F1 *Feeding Tongues*
- G *Re-inforcing Ring*

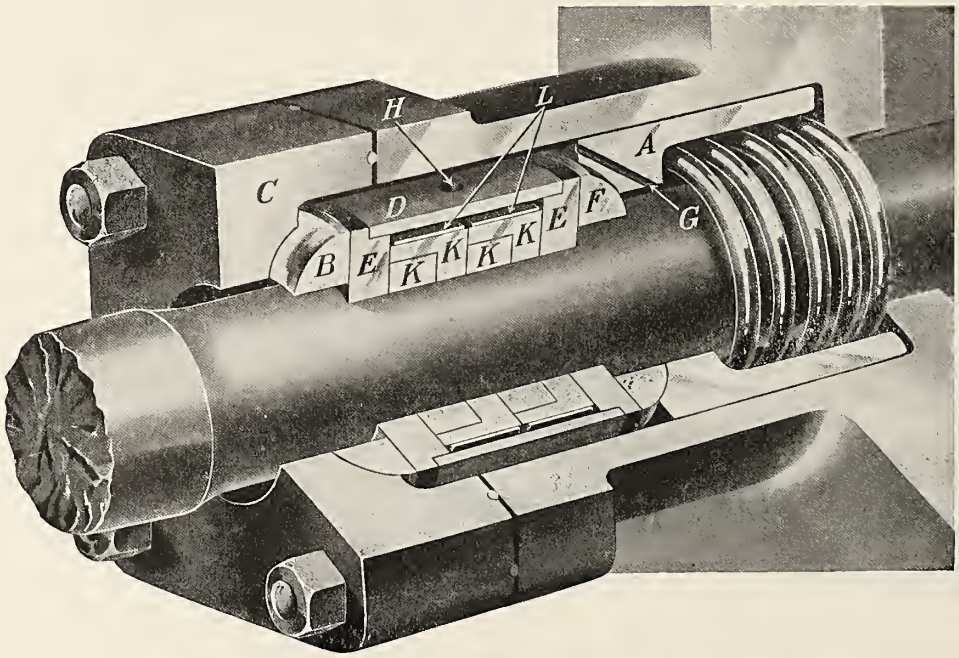

Names of Parts of Trojan Packing, Fig. 840.

- A *Follower*
- B *Ball Ring*
- C *Gland*
- D *Vibrating Case*
- E *Vibrating Case Ends*
- F *Ball Ring*
- G *Steam Port*
- H *Steam Port*
- K *Babbitt Packing Rings*
- L *Band Spring*

Fig. 840—Trojan Metallic Piston Rod Packing; H. G. Hammett.

Names of Parts of Crossheads, Figs. 841-847.

1 *Crosshead Body*
2 *Wrist Pin*
3 *Piston Rod Key*
4 *Lining*
5 *Piston Rod Boss*
6 *Piston Rod*
8 *Top Bar Oil Cup*
9 *Crosshead Shoe or Gib*
10 *Lower Bar Oil Cup*
11 *Oil Cup Cover*
13 *Oil Cup Cover Spring*
14 *Crosshead Arm*

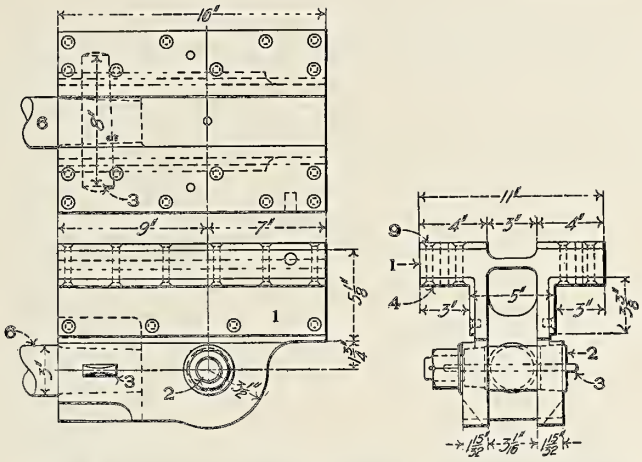

Fig. 841—Four-Guide Crosshead; Baldwin Locomotive Works.

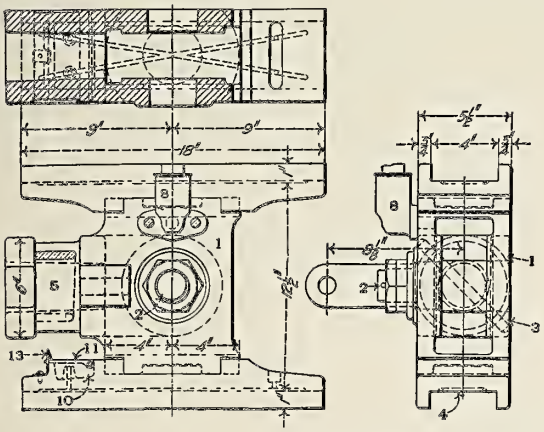

Fig. 842—Alligator Crosshead; Baldwin Locomotive Works.

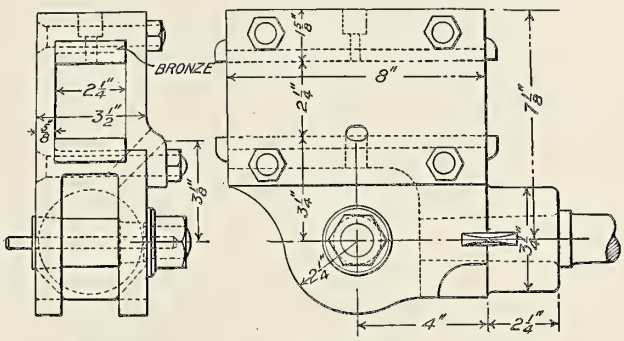

Fig. 843—Single Guide Crosshead; Baldwin Locomotive Works.

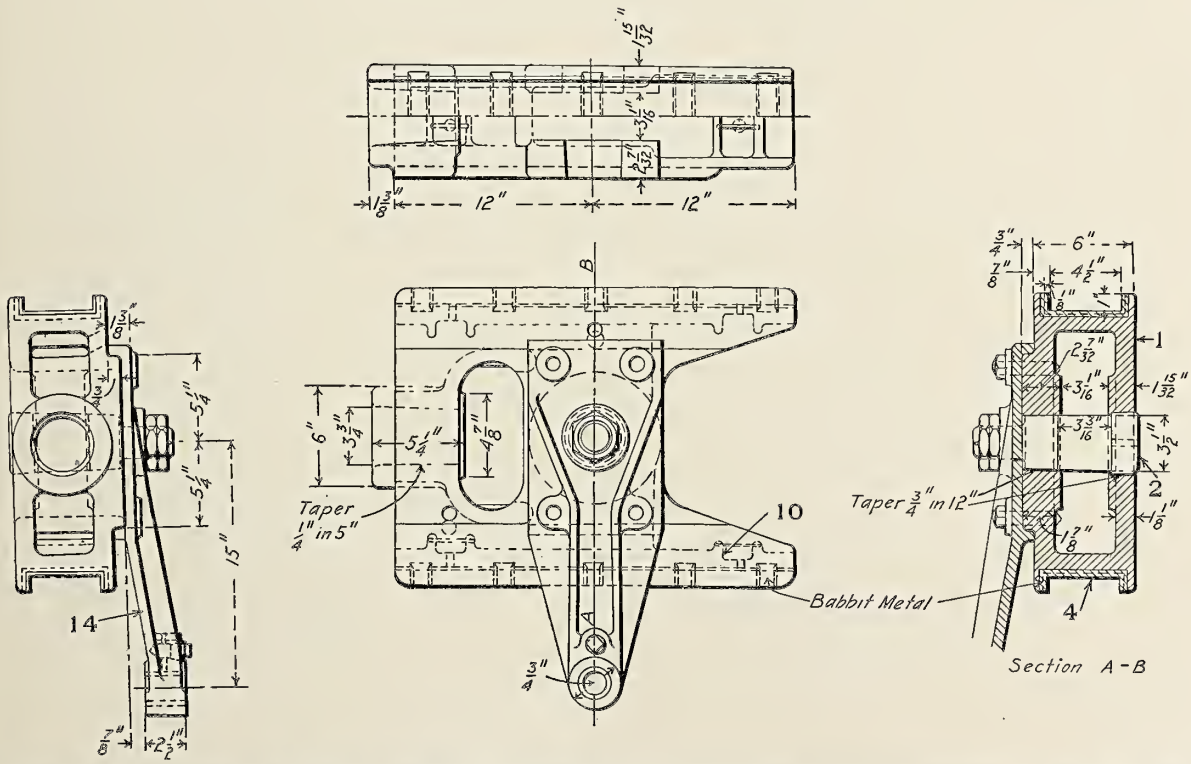

Fig. 844—One-Piece Cast Steel Alligator Crosshead for Ten-Wheel (4-6-0) Locomotive. Built for the Norfolk Southern by the Baldwin Locomotive Works.

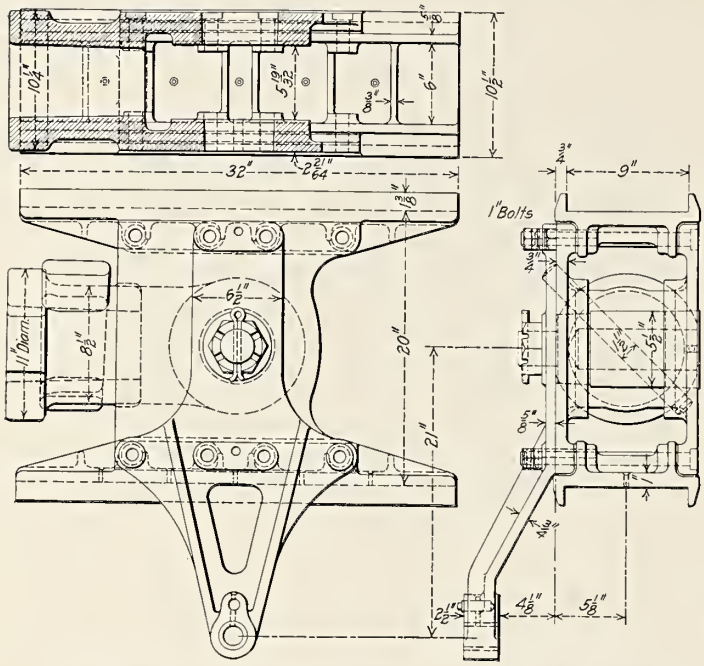

Fig. 845—Alligator Crosshead for Santa Fe Type (2-10-2) Locomotive. Built for the Erie by the Baldwin Locomotive Works.

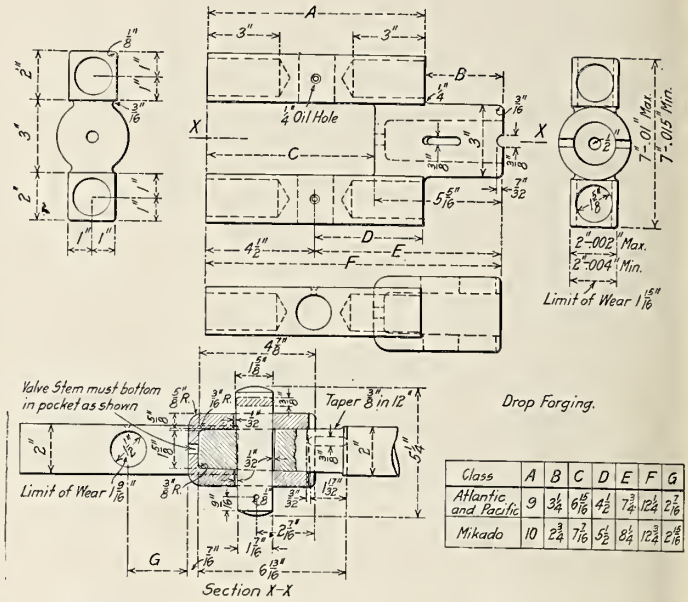

Class	A	B	C	D	E	F	G
Atlantic and Pacific	9	3 1/4	6 15/16	4 1/2	7 3/4	12 1/4	2 7/16
Mikado	10	2 3/4	7 7/16	5 1/2	8 1/4	12 3/4	2 15/16

Fig. 846—Valve Stem Crosshead for Mikado, Atlantic and Pacific Type Locomotives; Pennsylvania Railroad.

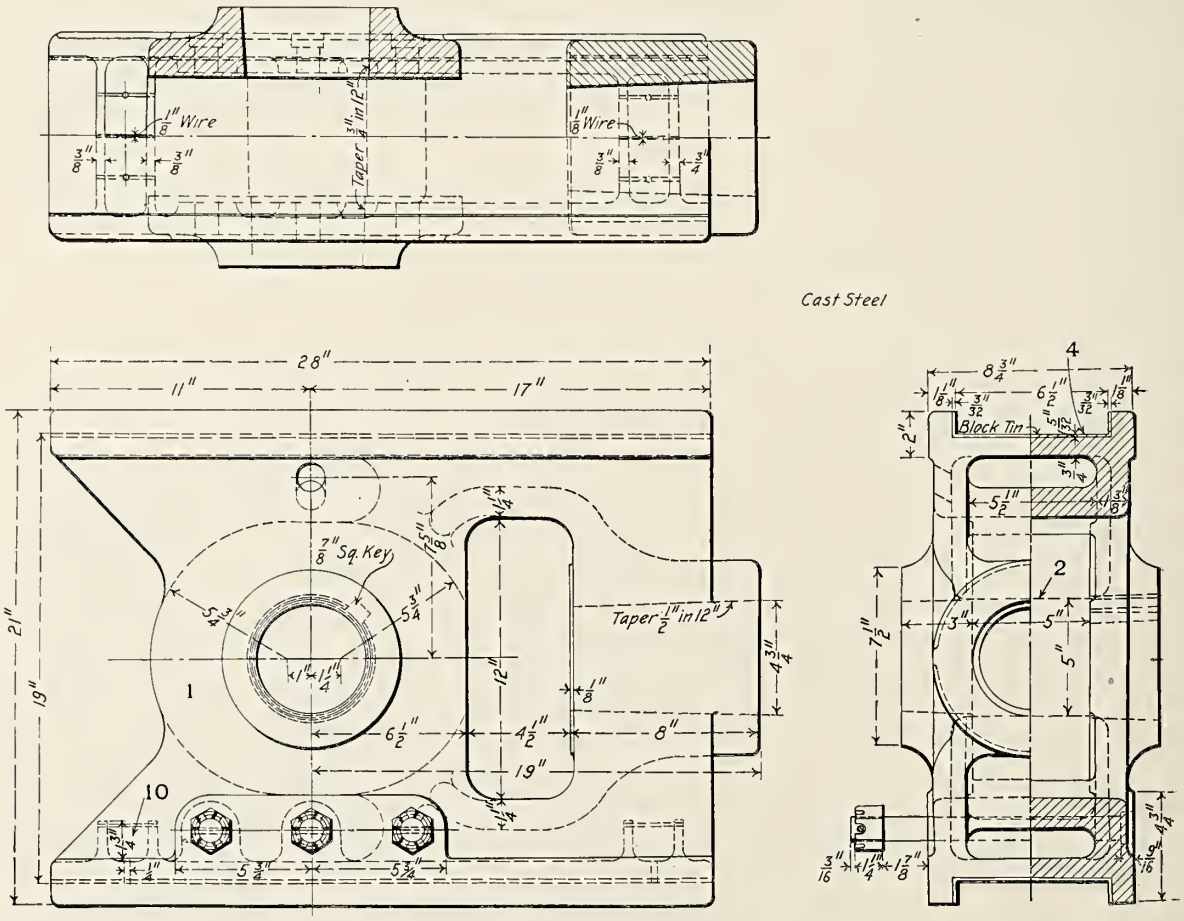

Fig. 847—One-piece Cast Steel Alligator Crosshead for Mountain Type (4-8-2) Locomotive. Built for the Chesapeake & Ohio by the American Locomotive Company.

Numbers Refer to Names of Parts on Page 429.

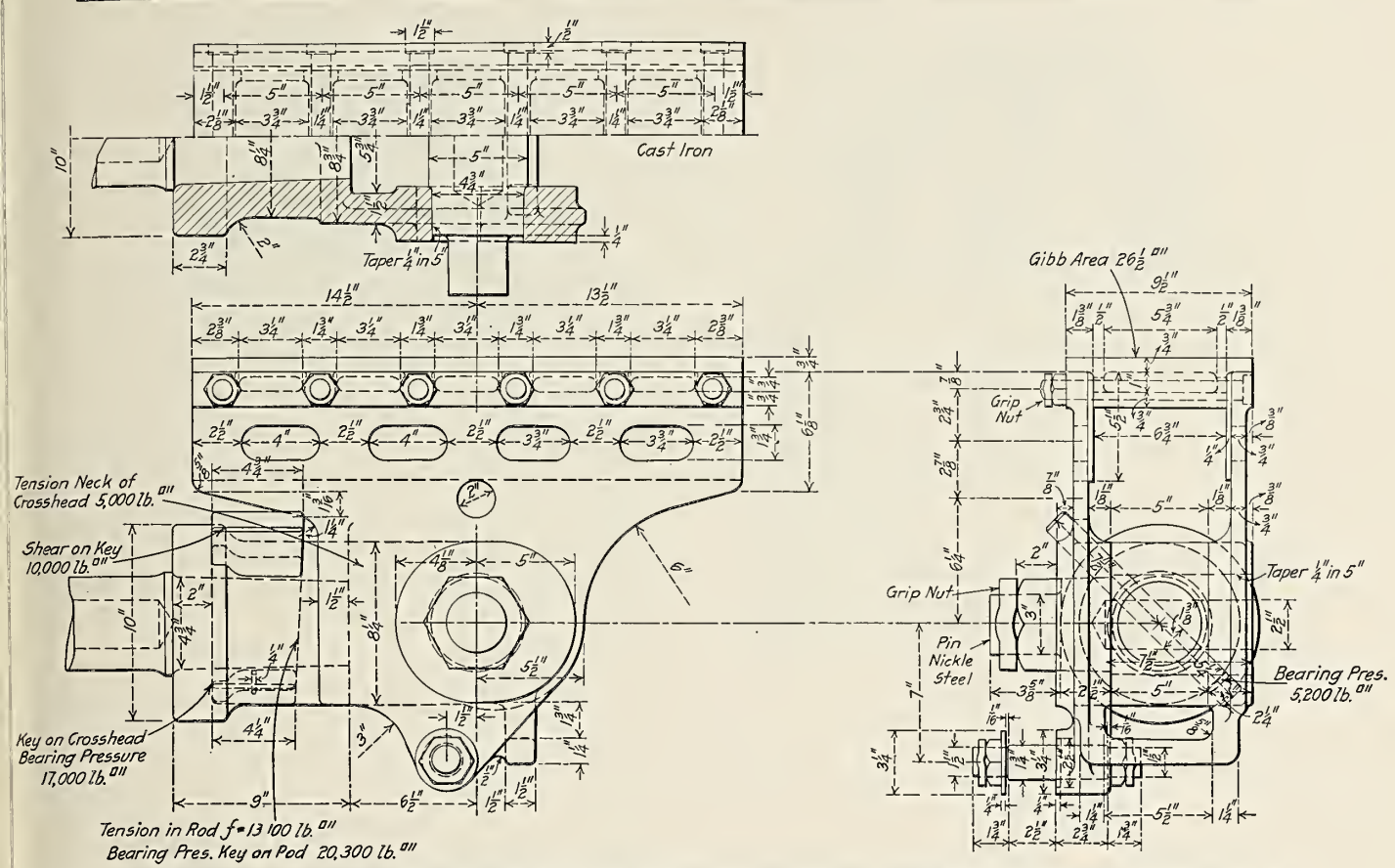

Fig. 848—Laird Crosshead for Santa Fe Type (2-10-2) Locomotive. Built for the Chicago, Burlington & Quincy by the Baldwin Locomotive Works.

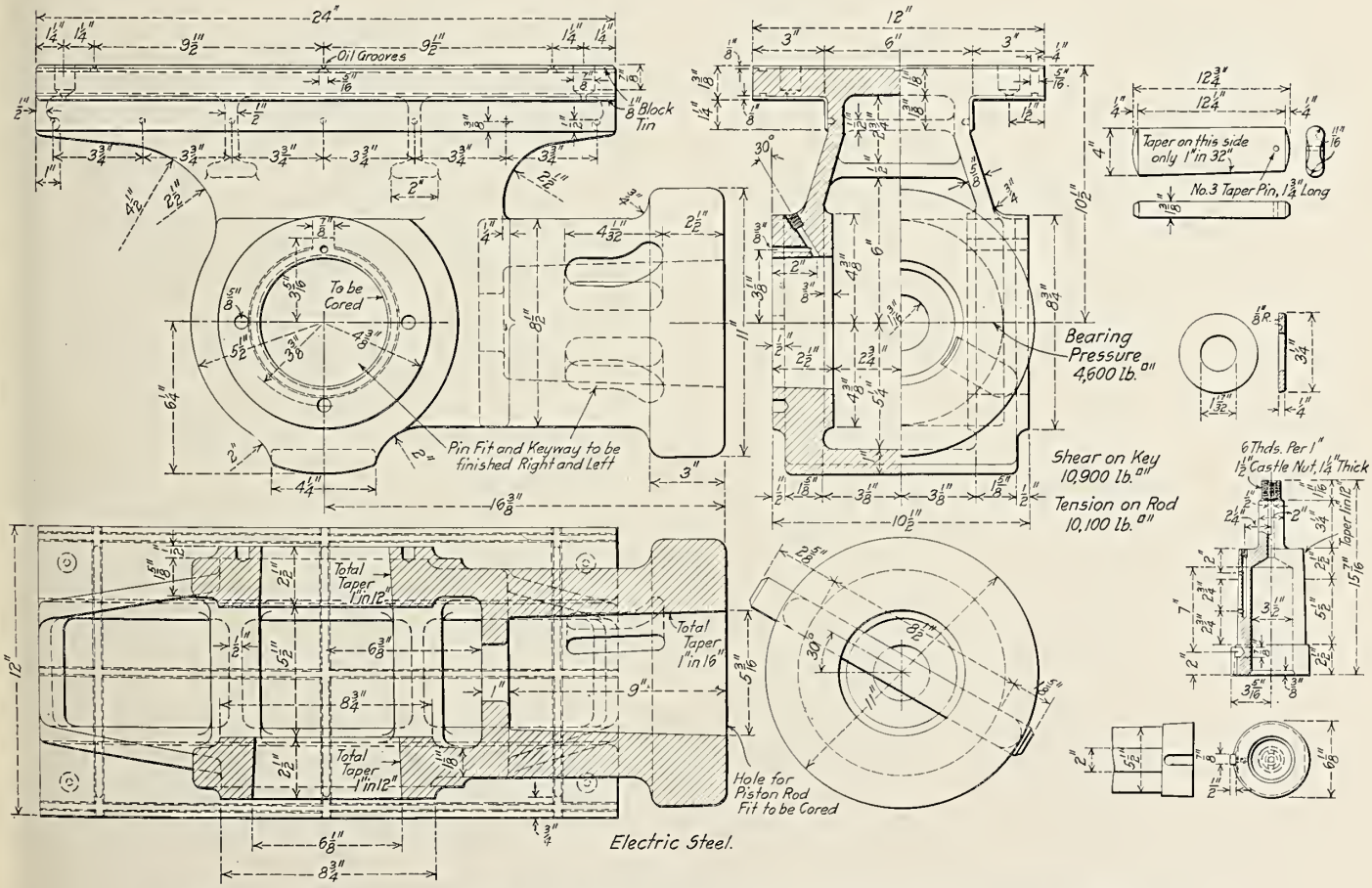

Fig. 849—Crosshead for Class K-4-s Pacific Type (4-6-2) Locomotive; Pennsylvania Railroad.

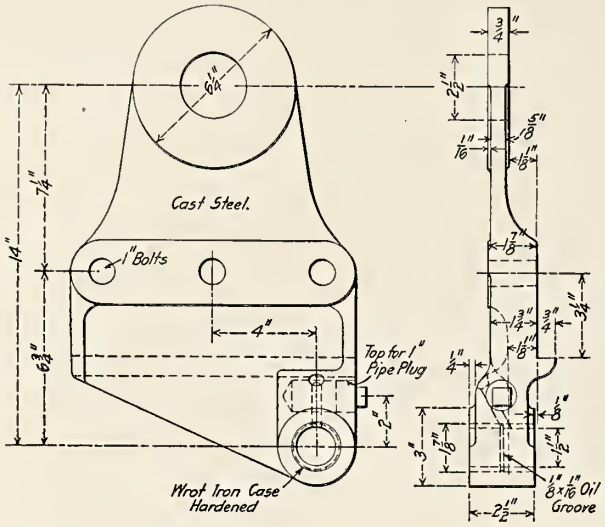

Fig. 850—Crosshead Arm for Mountain Type (4-8-2) Locomotive. Built for the Chesapeake & Ohio by the American Locomotive Company.

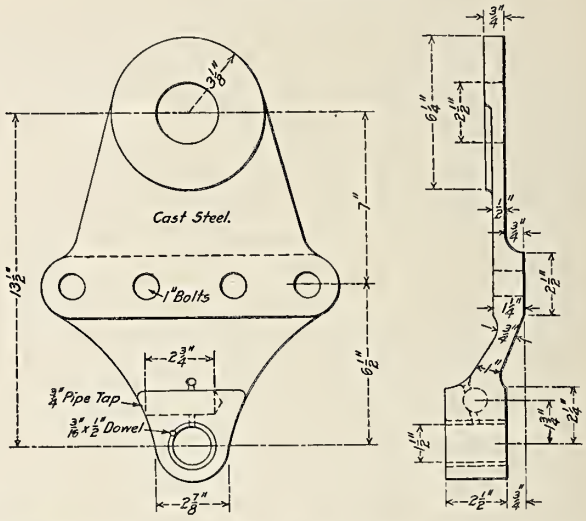

Fig. 851—Crosshead Arm for Pacific Type (4-6-2) Locomotive No. 50,000; American Locomotive Company.

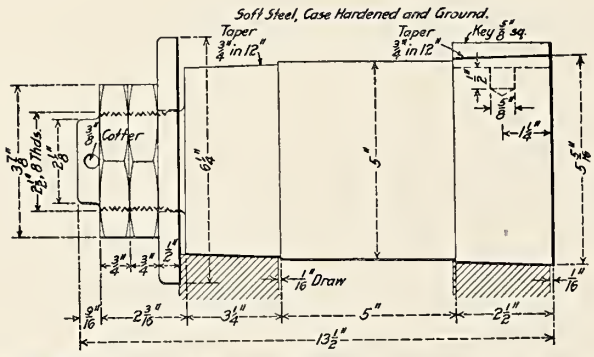

Fig. 852—Wrist Pin for Pacific Type (4-6-2) Locomotive.

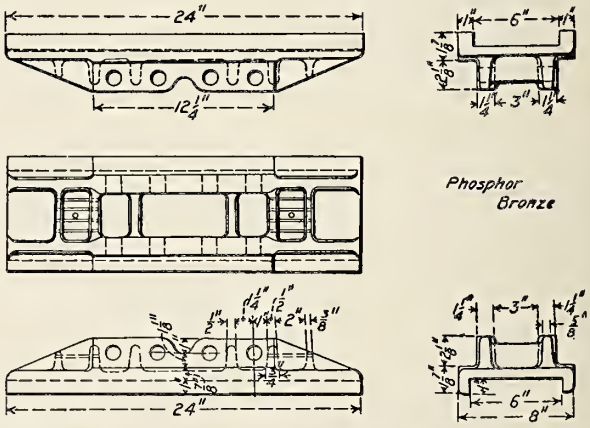

Fig. 853—Phosphor Bronze Crosshead Shoe for Pacific Type (4-6-2) Locomotive No. 50,000; American Locomotive Company.

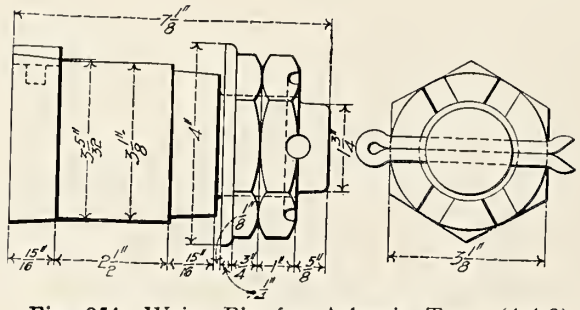

Fig. 854—Wrist Pin for Atlantic Type (4-4-2) Locomotive.

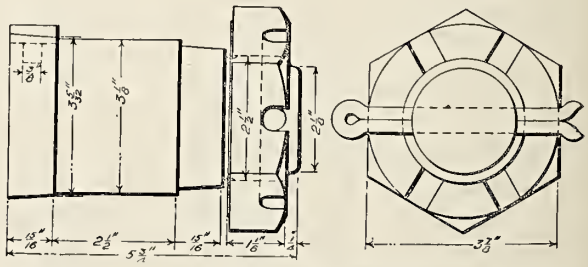

Fig. 855—Wrist Pin for Consolidation (2-8-0) Locomotive.

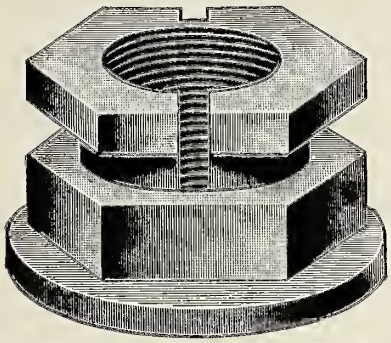

Fig. 856—Improved Lock Nut for Wrist Pin; The Columbia Nut & Bolt Company.

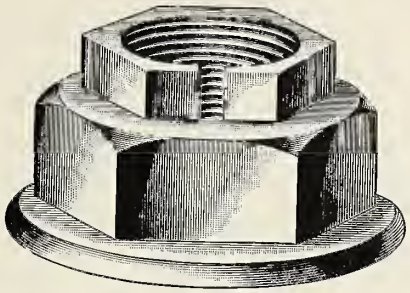

Fig. 857—Lock Nut for Wrist Pin; The Columbia Nut & Bolt Company.

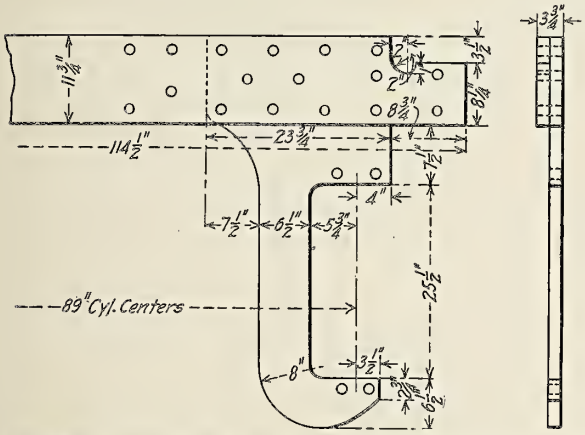

Fig. 858—Guide Yoke for Pacific Type (4-6-2) Locomotive.

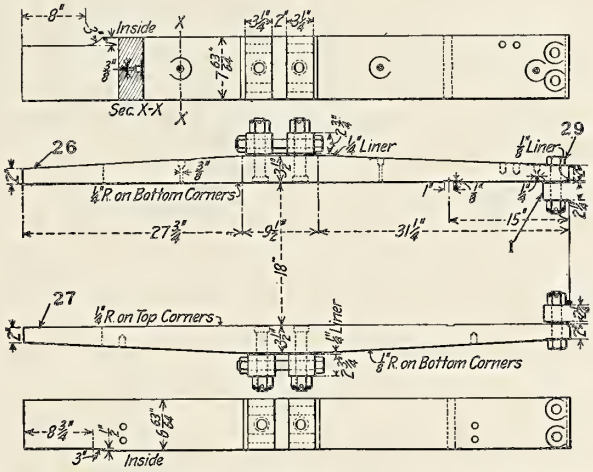

Fig. 859—Alligator Crosshead Guides for Pacific Type (4-6-2) Locomotive.

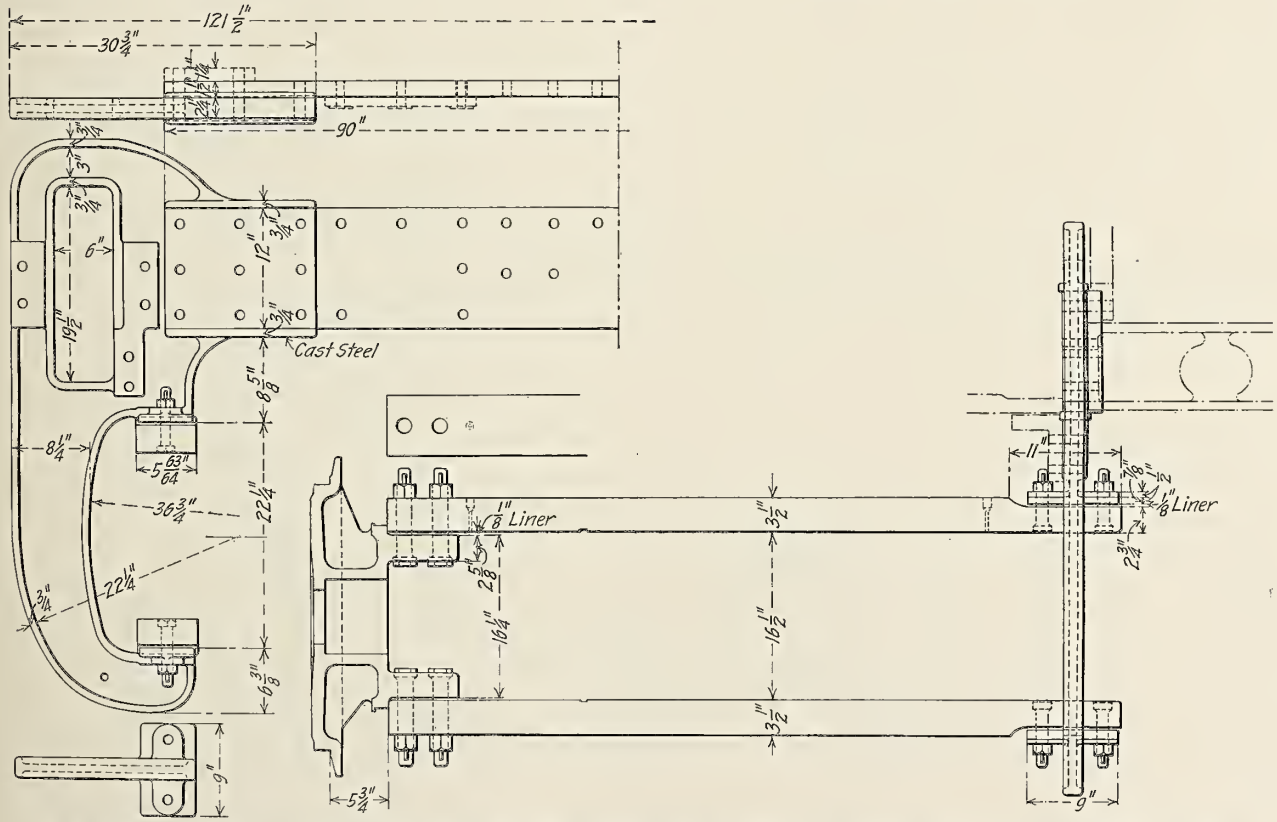

Fig. 860—Alligator Crosshead Guides and Cast Steel Guide Yoke for Mikado (2-8-2) Locomotive. Built for the Illinois Central by the Baldwin Locomotive Works.

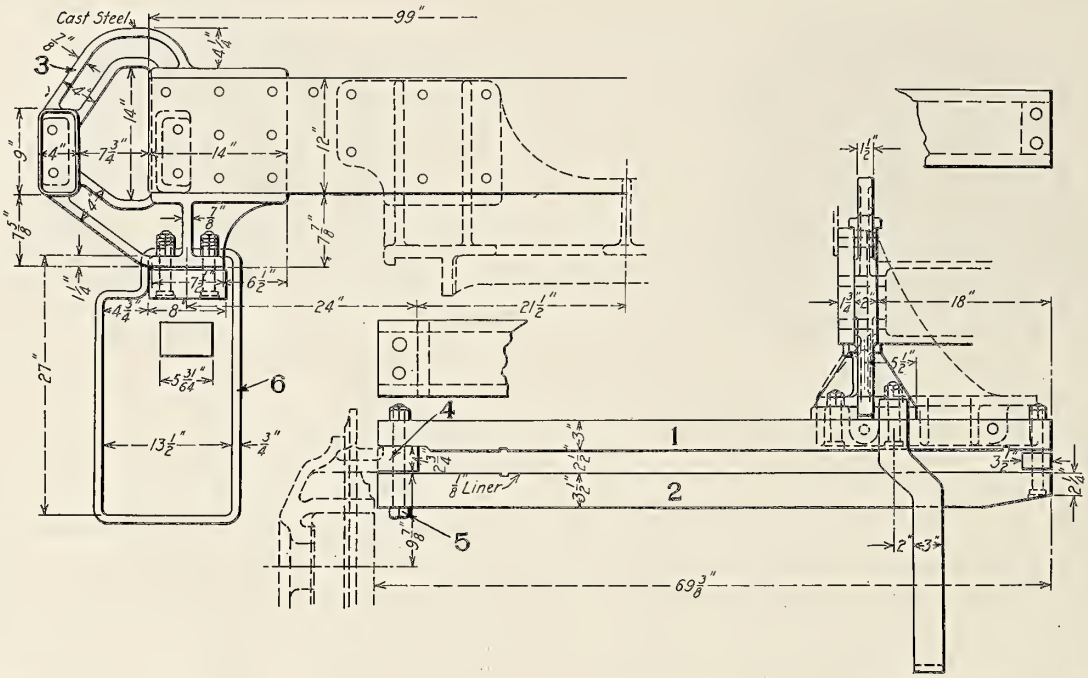

Fig. 861—Crosshead Guides and Guide Yoke for Laird Type Crosshead; Baldwin Locomotive Works.

Names of Parts of Fig. 861.

1 *Top Guide*
2 *Bottom Guide*
3 *Guide Yoke*
4 *Guide Block*
5 *Guide Block Bolt*
6 *Main Rod Guard*

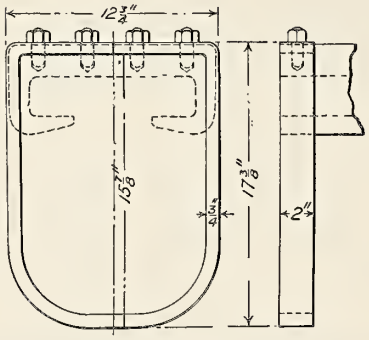

Fig. 862—Main Rod Guard for Atlantic Type (4-4-2) Locomotive; Pennsylvania Railroad.

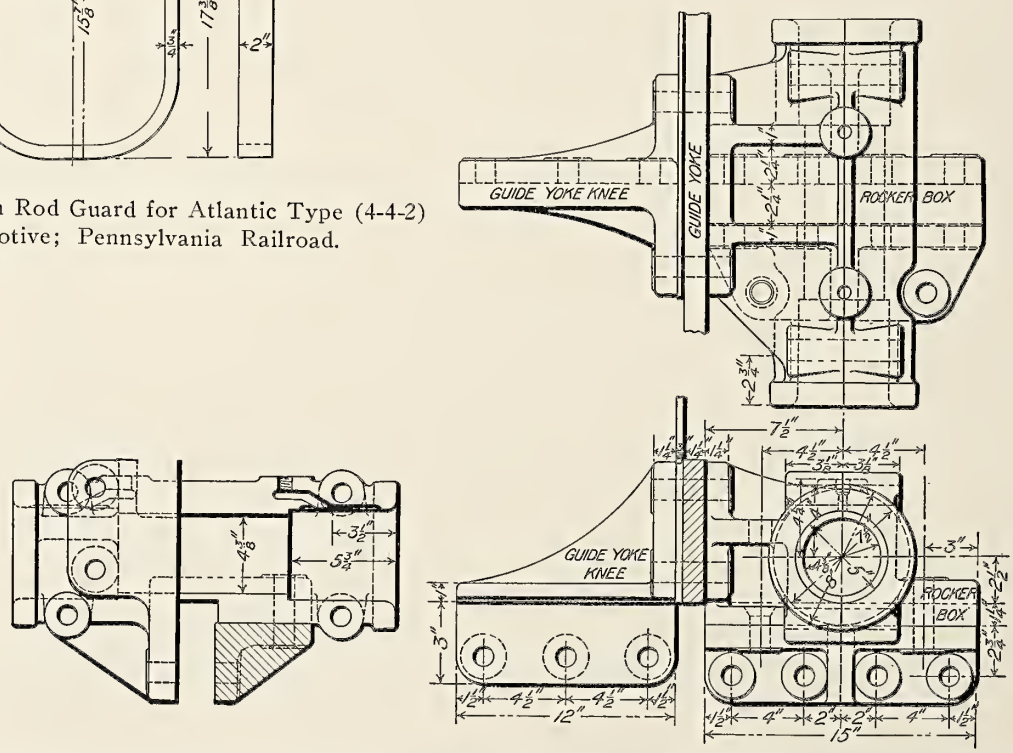

Fig. 863—Details of Rocker Box and Guide Yoke Knee for Atlantic Type (4-4-2) Locomotive; Pennsylvania Railroad.

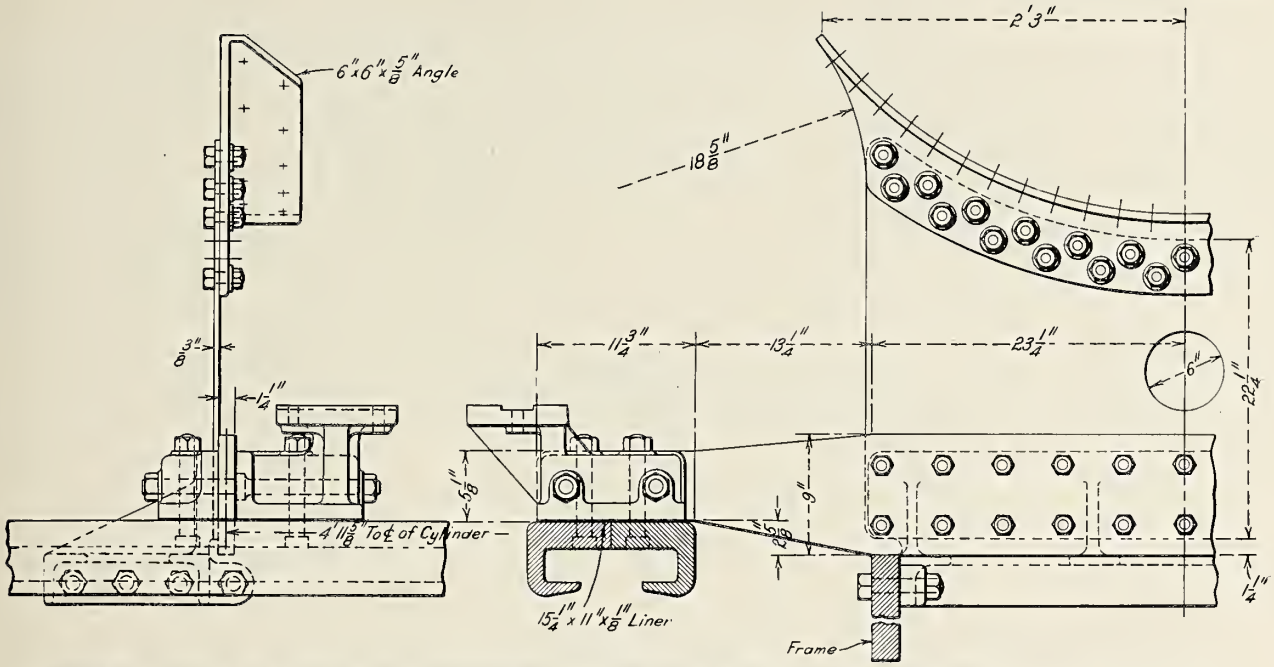

Fig. 864—Guide and Guide Yoke Arranged for Walschaert Valve Gear on Atlantic Type (4-4-2) Locomotive; Pennsylvania Railroad.

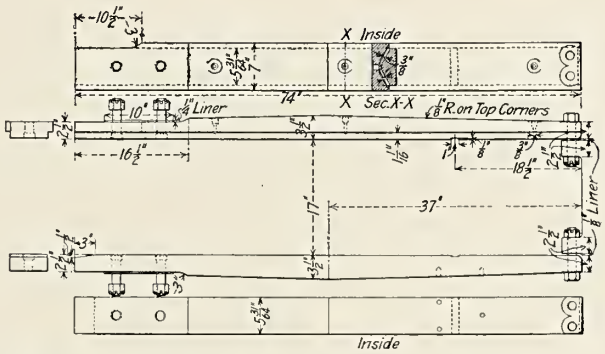

Fig. 865—Alligator Crosshead Guides for Mallet Articulated (2-6-6-2) Compound Locomotive. Built for the New York Central & Hudson River by the American Locomotive Company.

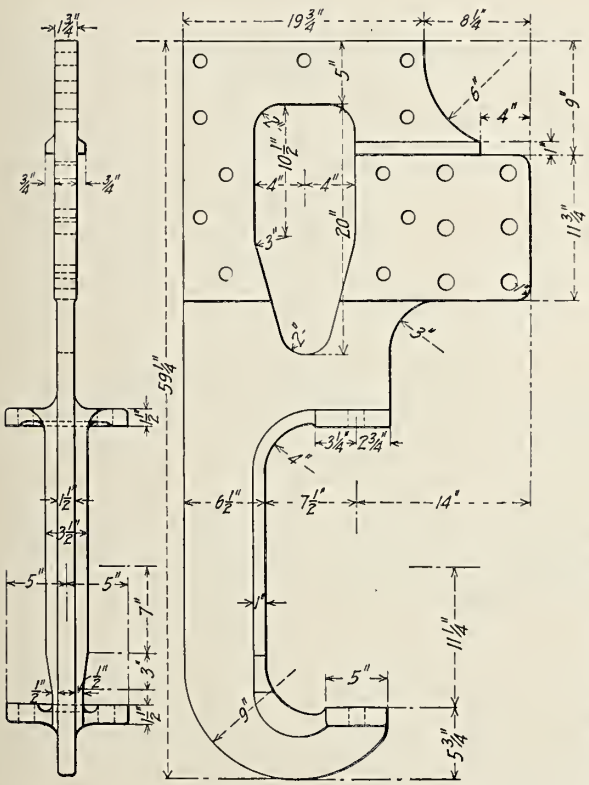

Fig. 866—Cast Steel Guide Yoke End for Mallet Articulated (2-6-6-2) Compound Locomotive. Built for the New York Central & Hudson River by the American Locomotive Company.

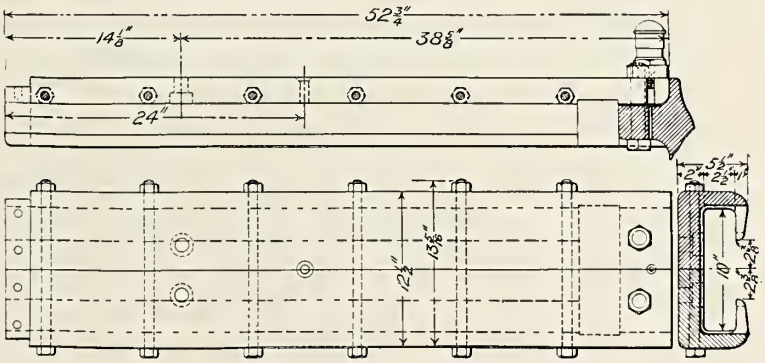

Fig. 867—Guides for Atlantic Type (4-4-2) Locomotive; Pennsylvania Railroad.

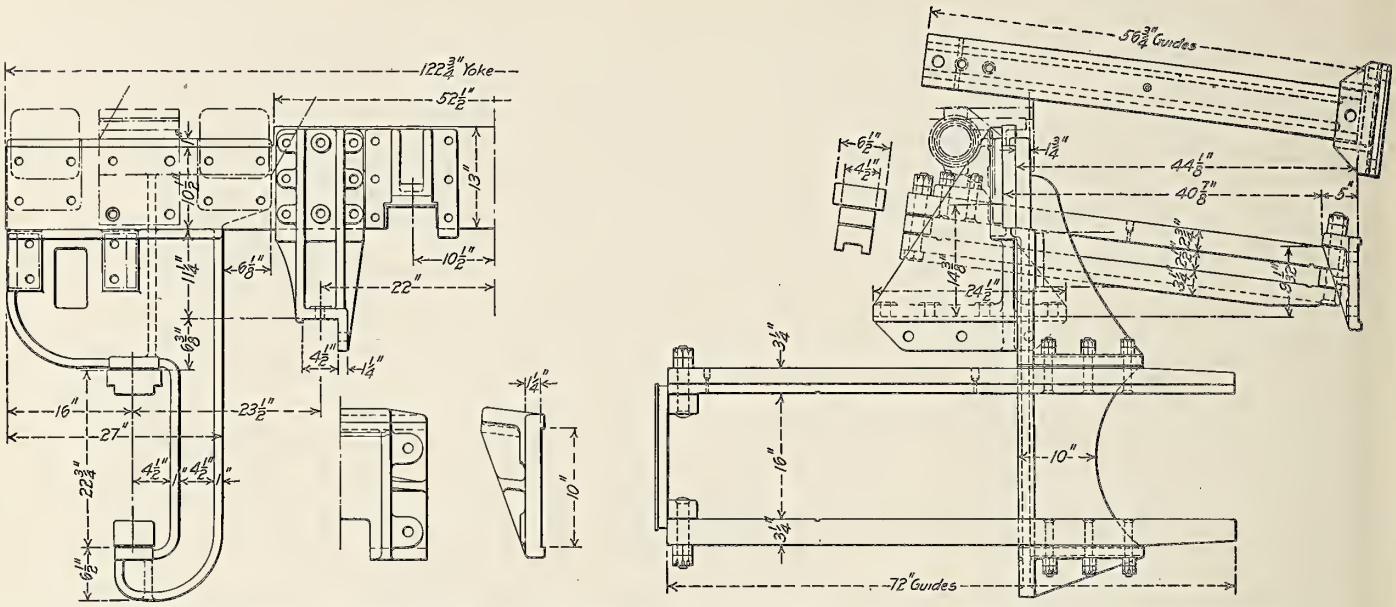

Fig. 868—Guides and Guide Yoke for Pacific Type (4-6-2) Four-Cylinder Balanced Compound Locomotive. Built for the Atchison, Topeka & Santa Fe by the Baldwin Locomotive Works.

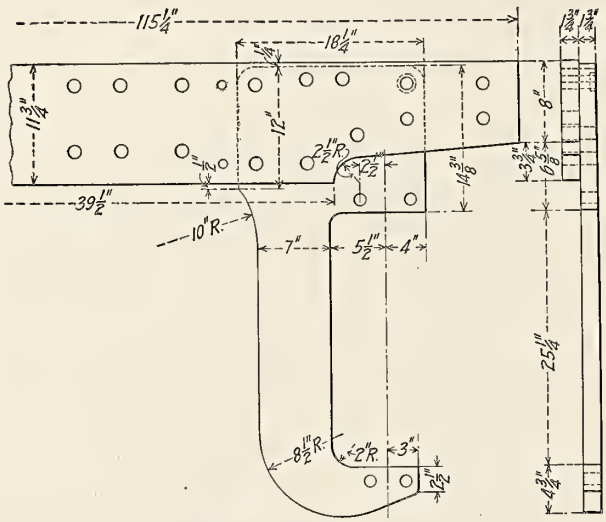

Fig. 869—Guide Yoke.

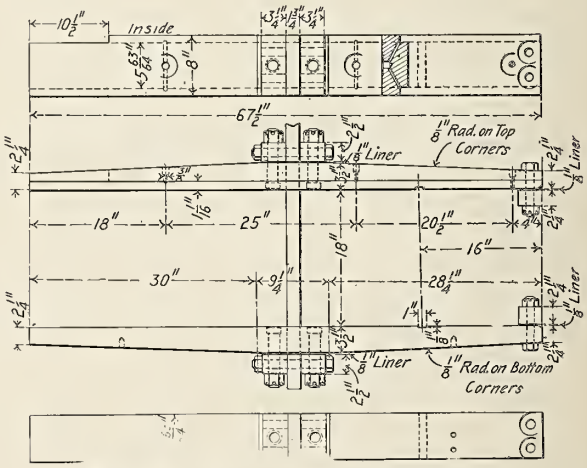

Fig. 870—Alligator Crosshead Guides.

Figs. 869-870 are Details of Guides for Pacific Type (4-6-2) Locomotive No. 50,000; American Locomotive Company.

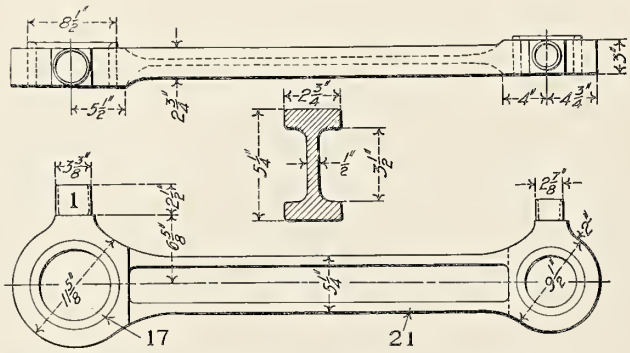

Fig. 871—Side Rod for Atlantic Type (4-4-2) Locomotive; American Locomotive Company.

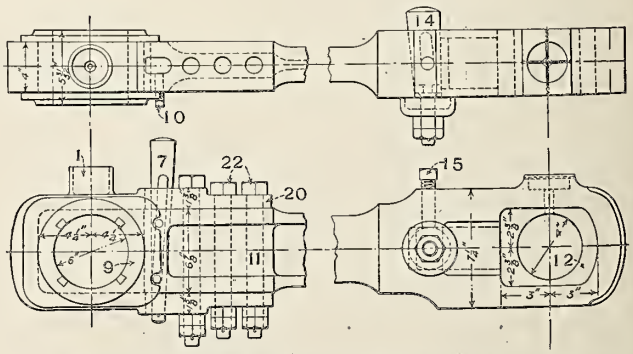

Fig. 872—Stub Ends of Main Rod for Atlantic Type (4-4-2) Locomotive; American Locomotive Company.

Numbers Refer to Names of Parts on Page 437.

Names of Parts of Connecting Rods, Figs. 871-883.

1 *Oil or Grease Cup*
2 *Crank Pin Bushing*
7 *Main Pin Brass Key*
9 *Main Pin Brass*
10 *Main Pin Brass Key Set Screw*
11 *Main Rod Stub End*
12 *Wrist Pin Brass*
13 *Wrist Pin Brass Wedge Block*
14 *Wrist Pin Brass Key*
14a *Wrist Pin Brass Key Washer*
15 *Wrist Pin Brass Key Set Screw*
16 *Main Rod Pin Wedge Block*
17 *Bushing*
19 *Bushing Set Screw*
20 *Rod Strap*
21 *Rod Body*
22 *Rod Strap Bolts*
23 *Knuckle Pin*
23a *Knuckle Pin Nut*

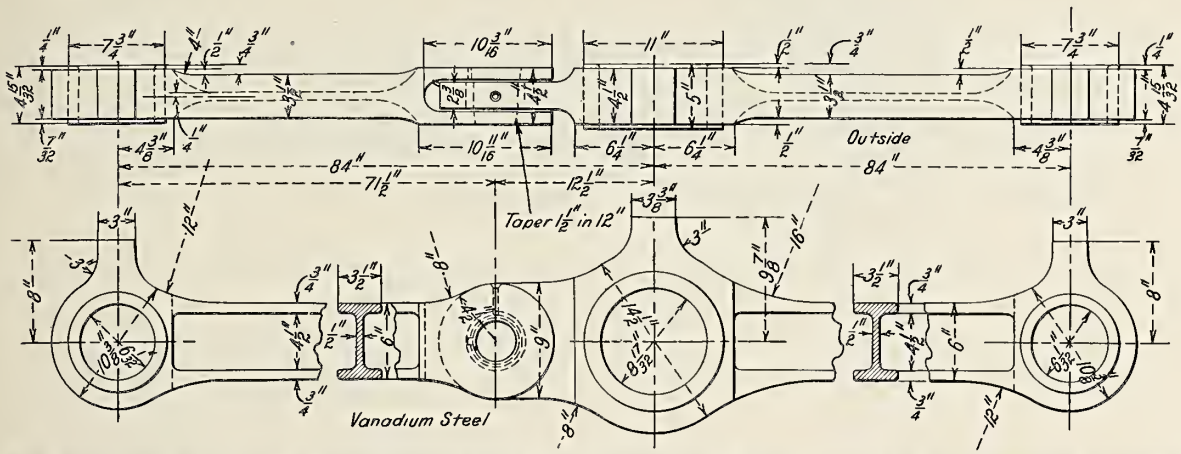

Fig. 873—Side Rods for Pacific Type (4-6-2) Locomotive No. 50,000. Built for Experimental Purposes by the American Locomotive Company.

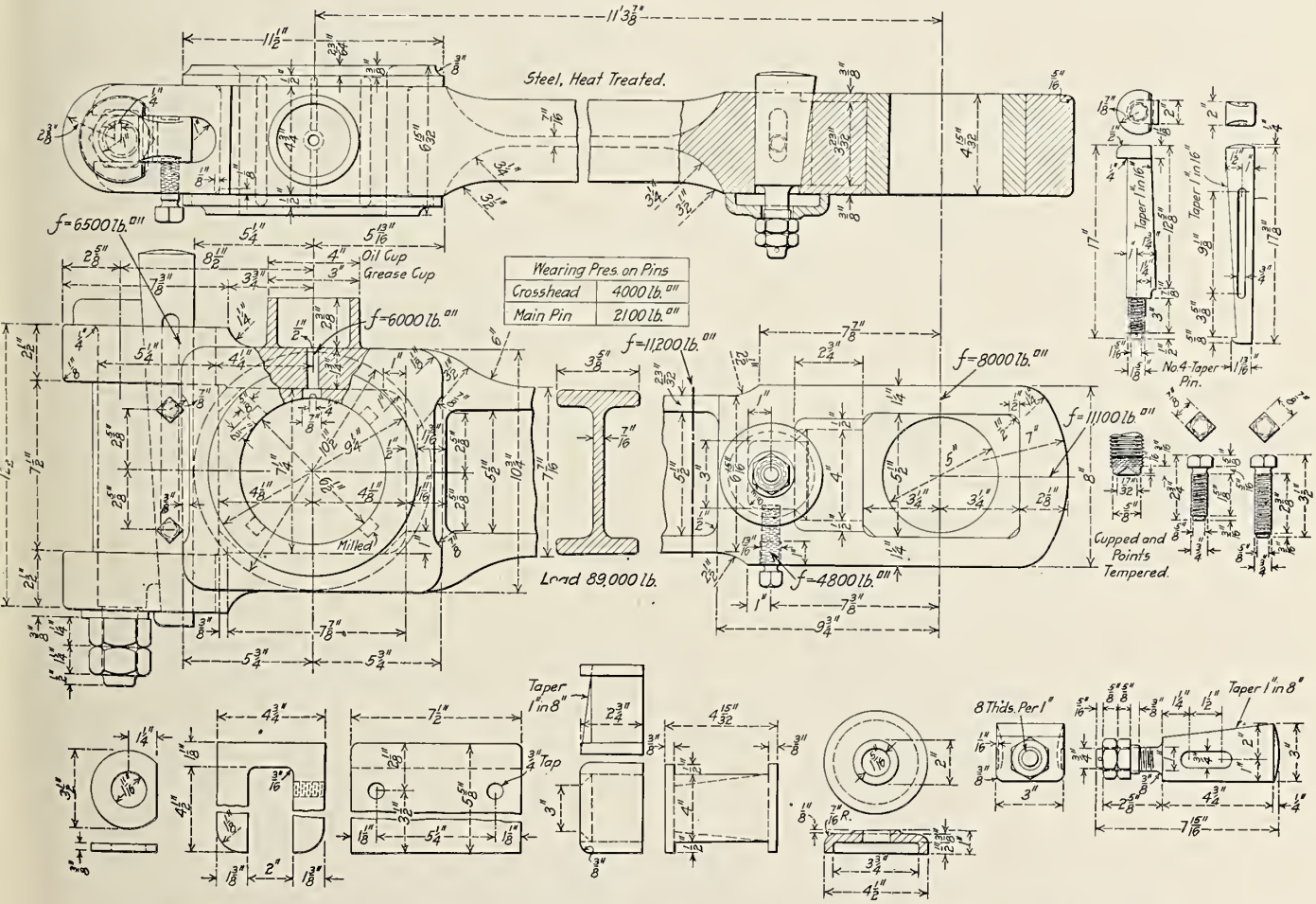

Fig. 874—Main Rod for Class E-6-s Atlantic Type (4-4-2) Locomotive; Pennsylvania Railroad.

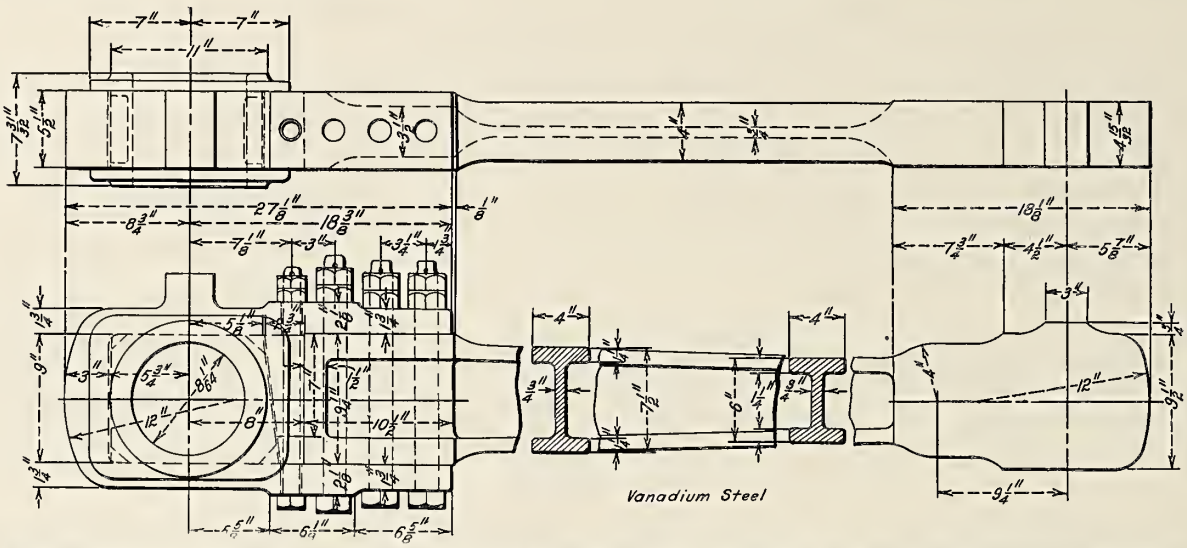

Fig. 875—Main Rod for Pacific Type (4-6-2) Locomotive No. 50,000. Built for Experimental Purposes by the American Locomotive Company.

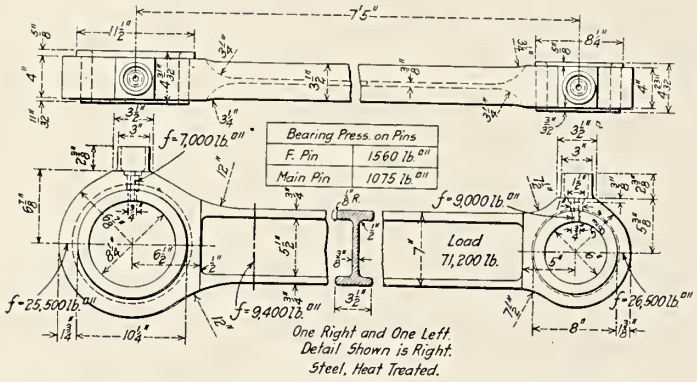

Fig. 876—Side Rod for Class E-6-s Atlantic Type (4-4-2) Locomotive; Pennsylvania Railroad.

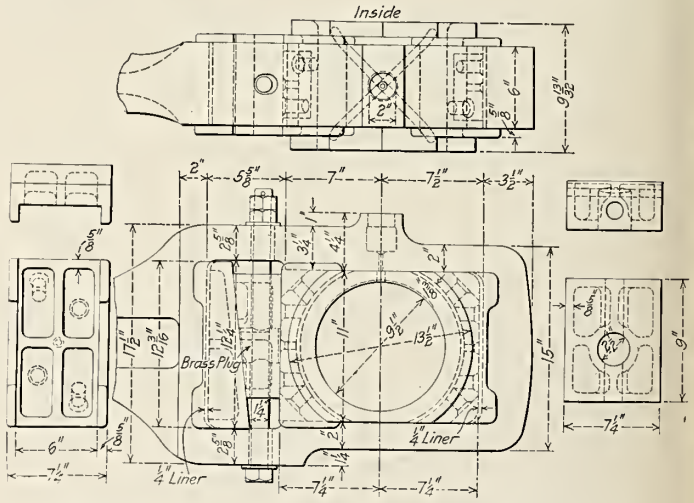

Fig. 877—Markel Main Rod Stub End with Cored Filler Blocks for Santa Fe Type (2-10-2) Locomotive. Built for the Erie by the Baldwin Locomotive Works.

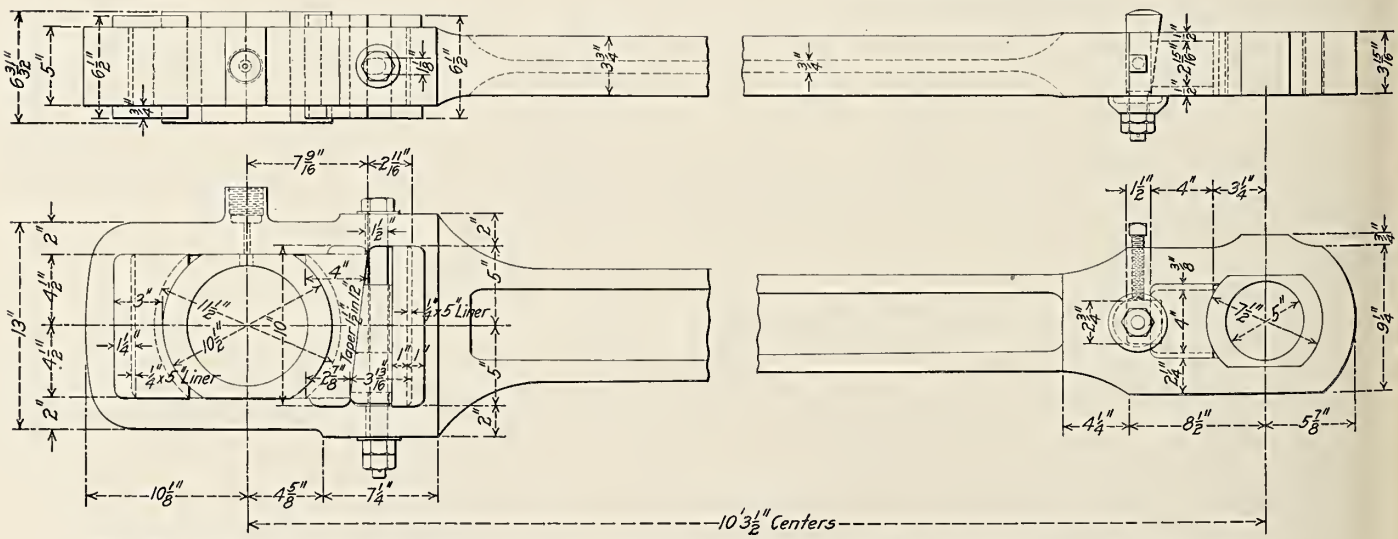

Fig. 878—Markel Solid End Main Rod Developed at the Clinton Shops of the Chicago & North Western; Equipment Improvement Company.

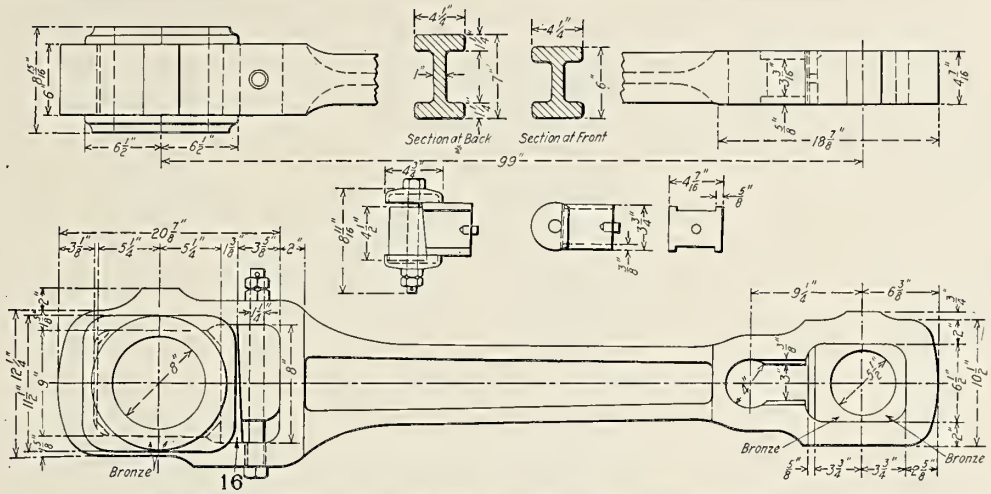

Fig. 879—Foulder Main Rod; American Locomotive Company.

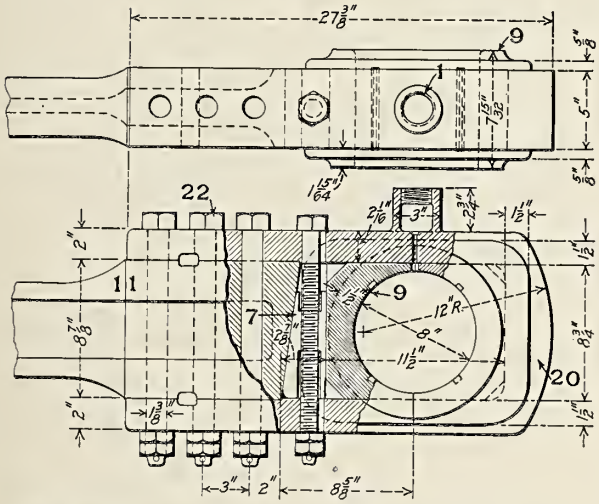

Fig. 880—Main Rod Stub End at the Main Pin.

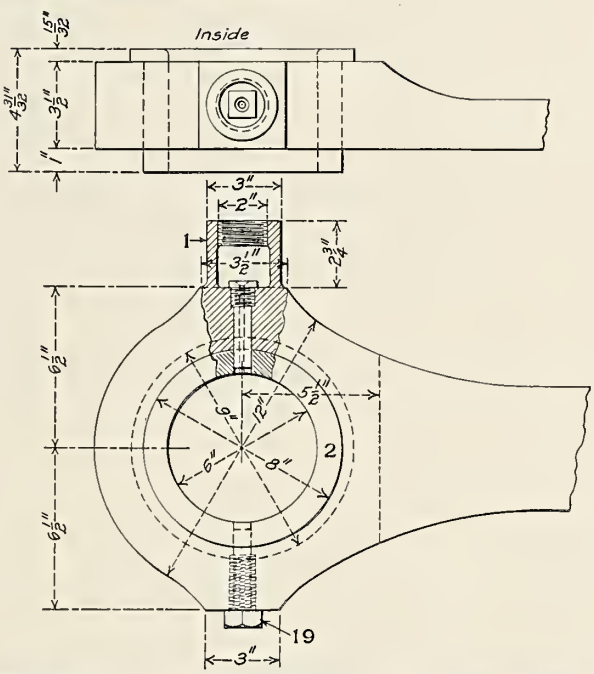

Fig. 881—Side Rod Stub End at the First and Fourth Drivers.

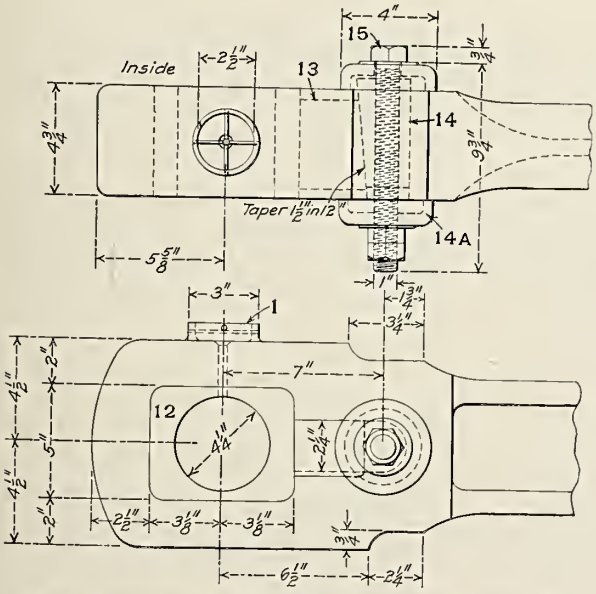

Fig. 882—Main Rod Stub End at the Crosshead.

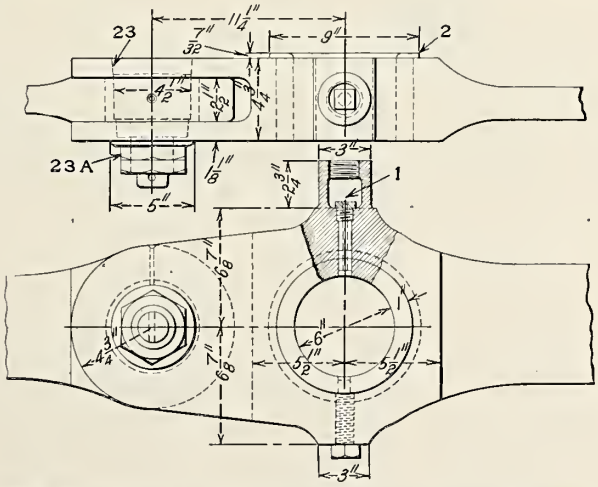

Fig. 883—Side Rod Stub End at the Second Driver.

Figs. 880-883 are Details of Connecting Rods for Mikado (2-8-2) Locomotive. Built for the Illinois Central by the Baldwin Locomotive Works.

Numbers Refer to Names of Parts on Page 437.

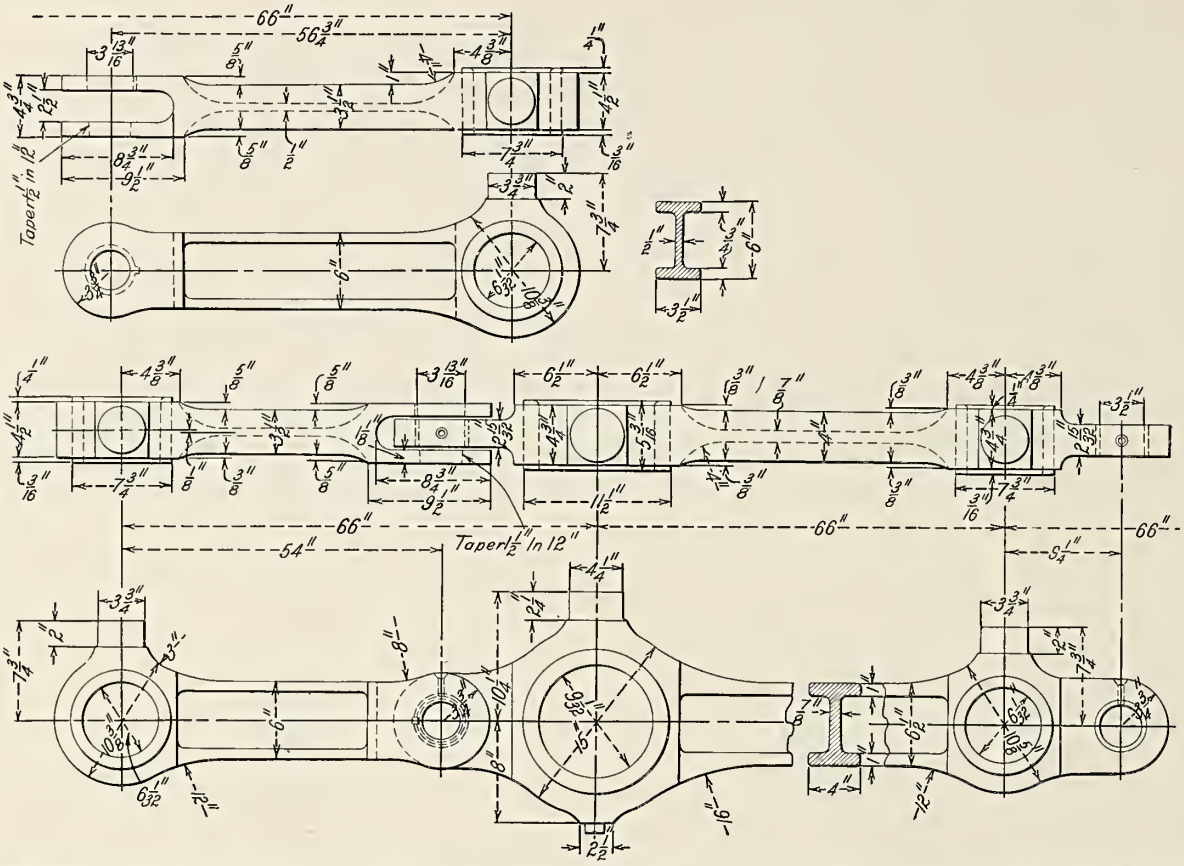

Fig. 884—Side Rods for Mountain Type (4-8-2) Locomotive. Built for the Chesapeake & Ohio by the American Locomotive Company.

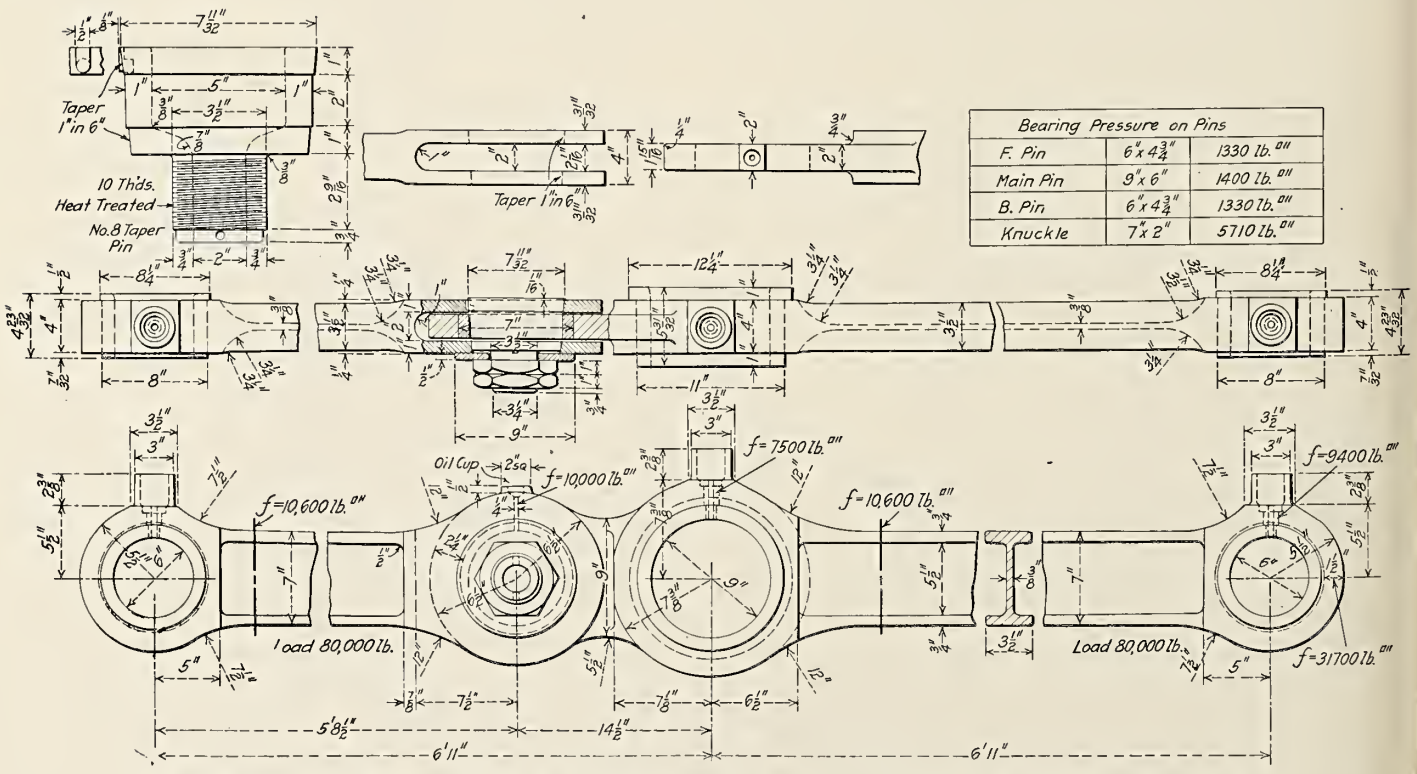

Bearing Pressure on Pins		
F. Pin	6"x4¾"	1330 lb.
Main Pin	9"x6"	1400 lb.
B. Pin	6"x4¾"	1330 lb.
Knuckle	7"x2"	5710 lb.

Fig. 885—Side Rods for Class K-4-s Pacific Type (4-6-2) Locomotive; Pennsylvania Railroad.

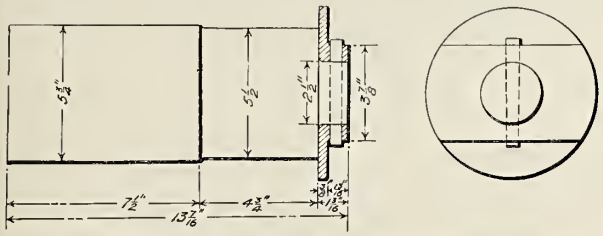

Fig. 886—Forward Crank Pin for Consolidation (2-8-0) Locomotive.

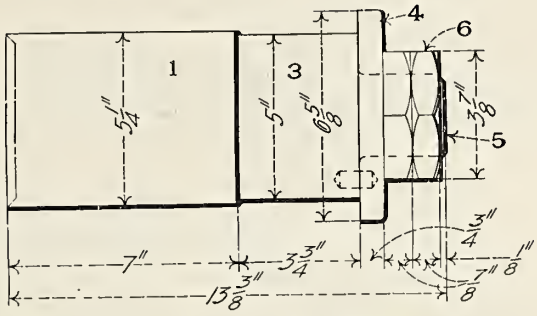

Fig. 887—Back Crank Pin for Consolidation (2-8-0) Locomotive.

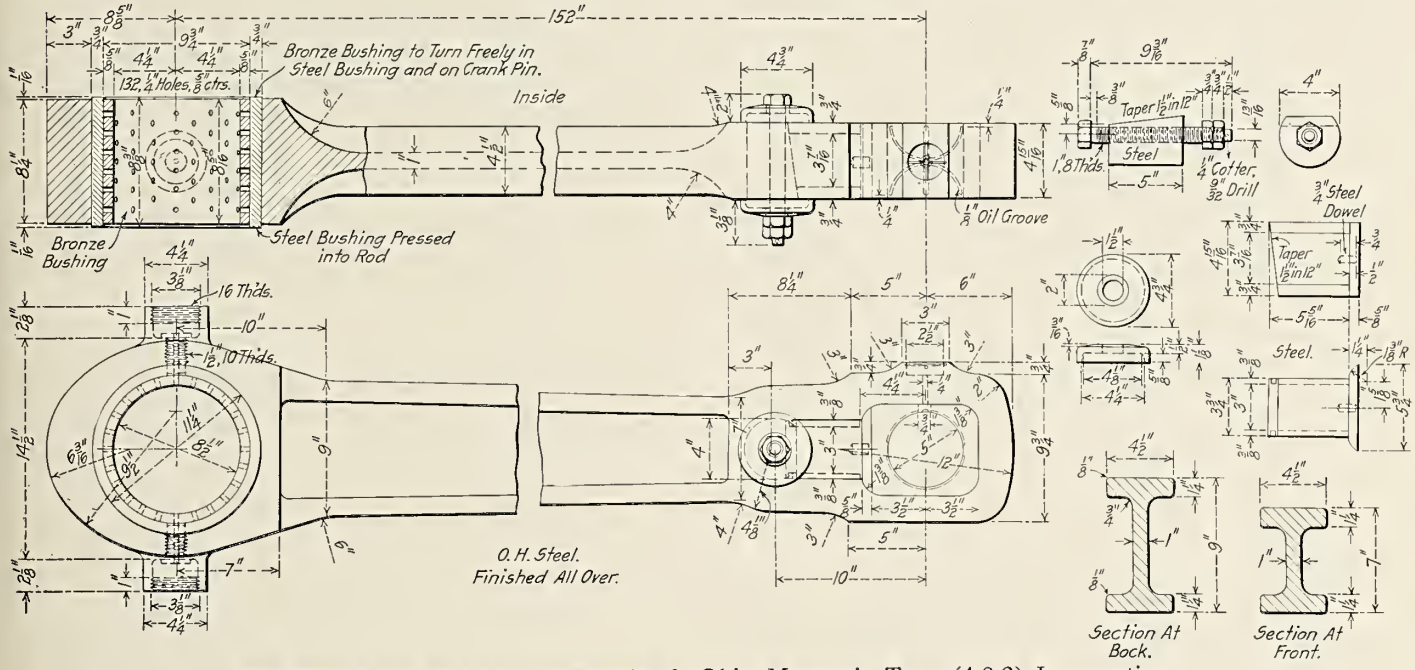

Fig. 888—Main Rod for Chesapeake & Ohio Mountain Type (4-8-2) Locomotive.

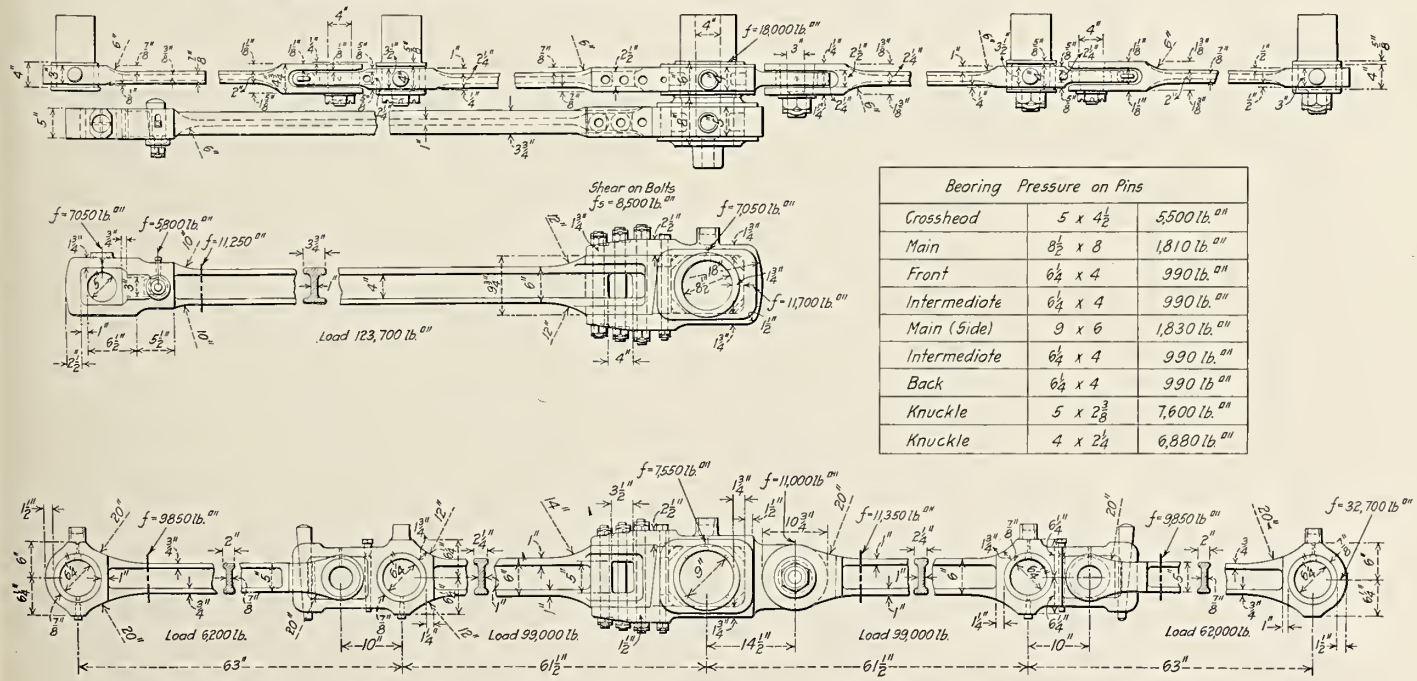

Bearing Pressure on Pins		
Crosshead	5 x 4½	5,500 lb.
Main	8½ x 8	1,810 lb.
Front	6¼ x 4	990 lb.
Intermediate	6¼ x 4	990 lb.
Main (Side)	9 x 6	1,830 lb.
Intermediate	6¼ x 4	990 lb.
Back	6¼ x 4	990 lb.
Knuckle	5 x 2⅜	7,600 lb.
Knuckle	4 x 2¼	6,880 lb.

Fig. 889—Connecting Rods for Santa Fe Type (2-10-2) Locomotive Built for the Chicago, Burlington & Quincy by the Baldwin Locomotive Works.

Numbers Refer to Names of Parts on Page 442.

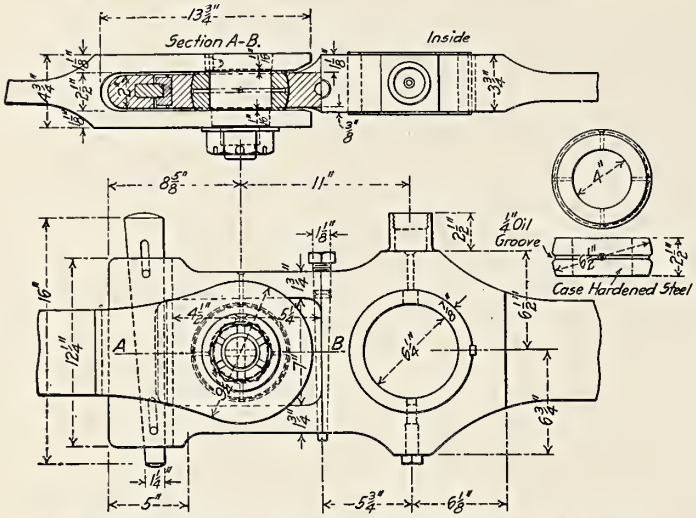

Fig. 890—Spherical Bearing on Side Rods of Santa Fe Type (2-10-2) Locomotive. Built for the Chicago, Burlington & Quincy by the Baldwin Locomotive Works.

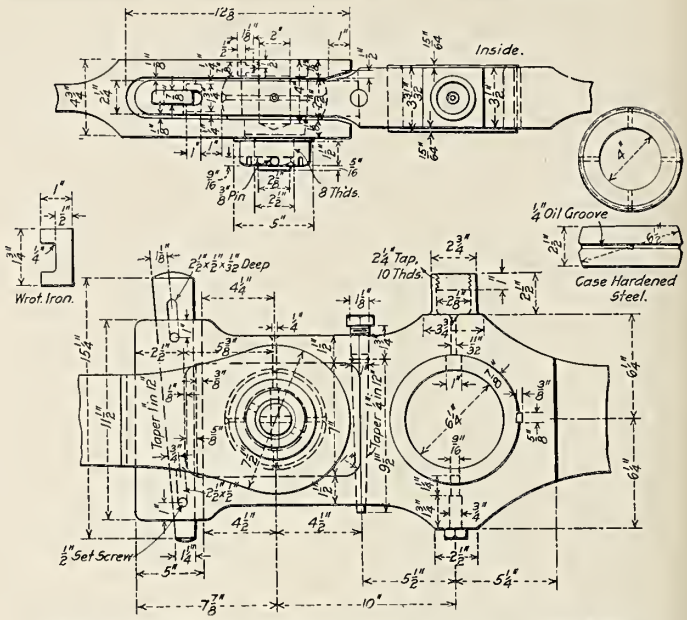

Fig. 891—Side Rod Stub Ends for Santa Fe Type (2-10-2) Locomotive. Built for the Chicago, Burlington & Quincy by the Baldwin Locomotive Works.

Names of Parts of Crank Pins, Figs. 887-892.

1 *Wheel Seat*
2 *Main Rod Bearing*
3 *Side Rod Bearing*
4 *Collar*
5 *Stud*
6 *Stud Nut*

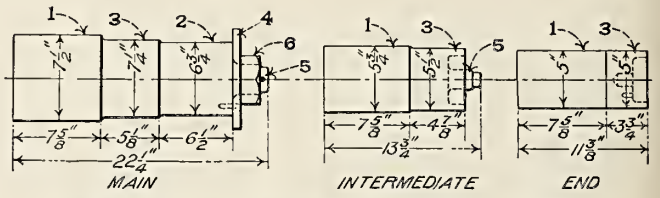

Fig. 892—Crank Pins for Consolidation (2-8-0) Locomotive.

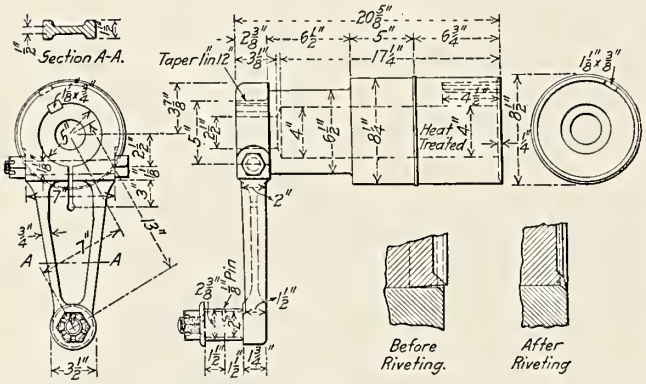

Fig. 893—Hollow Main Crank Pin for Class E-6-s Atlantic Type (4-4-2) Locomotive; Pennsylvania Railroad.

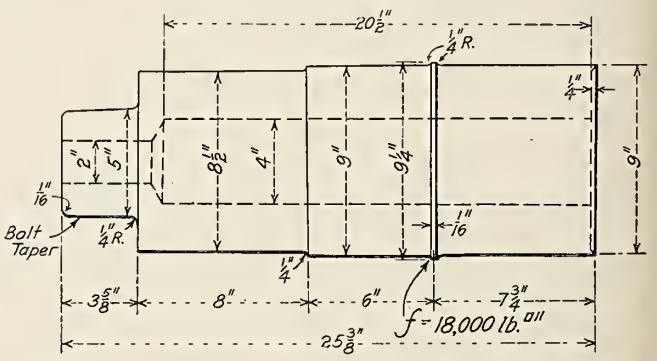

Fig. 894—Hollow Main Crank Pin for Santa Fe Type (2-10-2) Locomotive. Built for the Chicago, Burlington & Quincy by the Baldwin Locomotive Works.

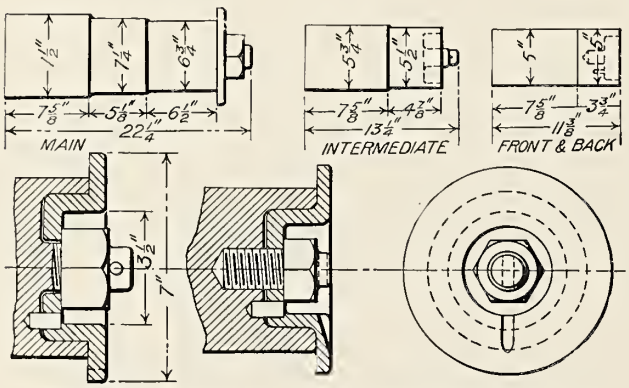

Fig. 895—Crank Pins for Consolidation (2-8-0) Locomotive.

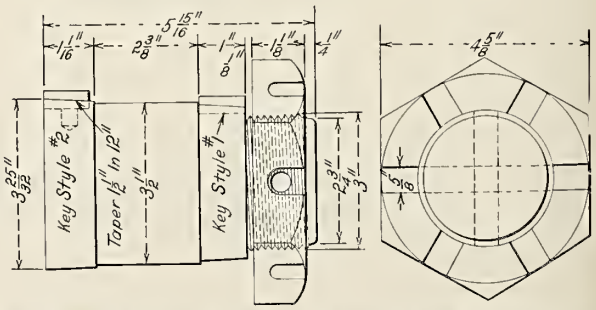

Fig. 896—Knuckle Pin for Pacific Type (4-6-2) Locomotive No. 50,000; American Locomotive Company.

Names of Parts of Driving Wheels, Figs. 897-907.

2 *Rim*
2a *Rim Slot*
3 *Hub*
4 *Axle Seat*
5 *Tire*
6 *Flange*
7 *Spoke*
8 *Counterbalance*
8a *Counterbalance Cavity*
9 *Crank Hub*
10 *Crank Pin Seat*
11 *Hub Liner*
12 *Retaining Ring*
13 *Retaining Ring Lip*
14 *Retaining Ring Bolt*

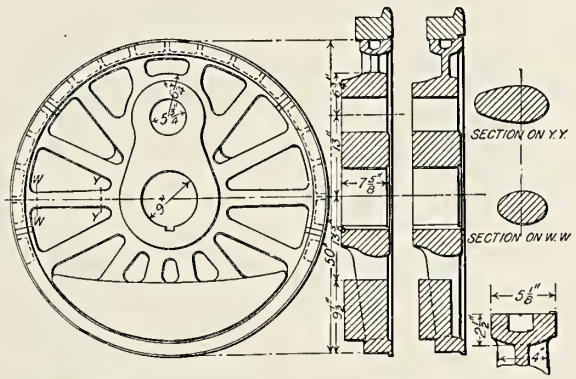

Fig. 897—Driving Wheel Center for Consolidation (2-8-0) Locomotive; American Locomotive Company.

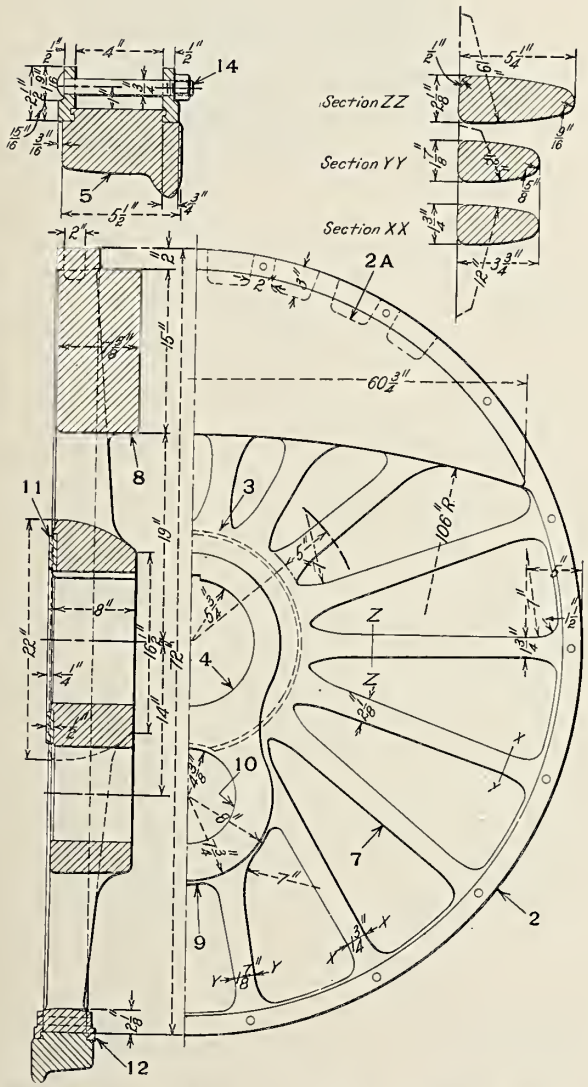

Fig. 898—Vanadium Cast Steel Driving Wheel Center for Pacific Type (4-6-2) Locomotive No. 50,000; American Locomotive Company.

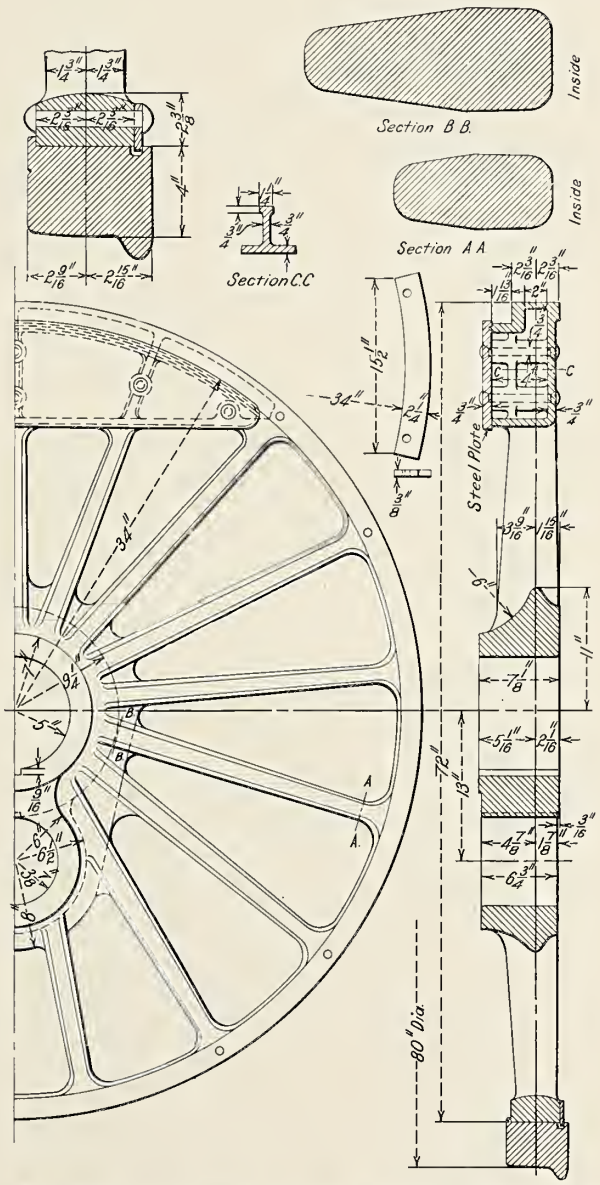

Fig. 899—Cast Steel Driving Wheel Center with Four Tire Retaining Segments for Class E6 Atlantic Type (4-4-2) Locomotive; Pennsylvania Railroad.

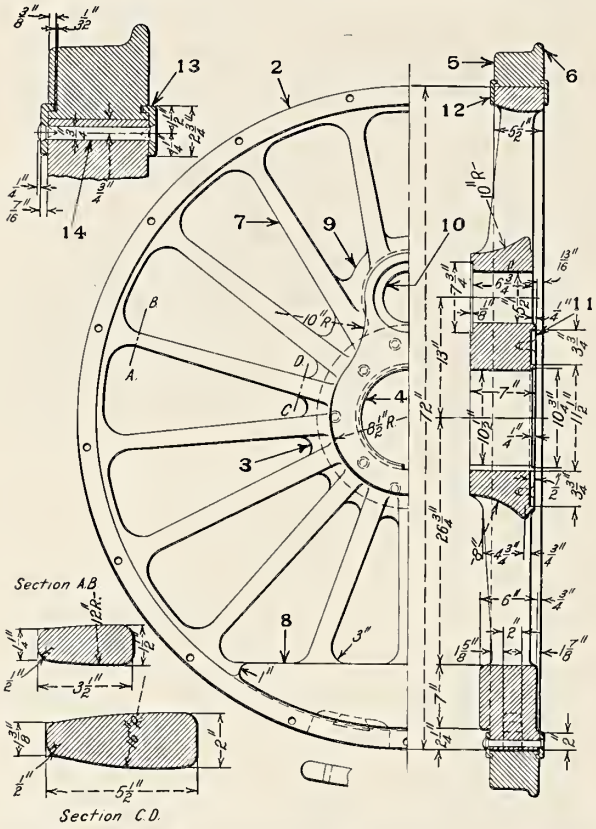

Fig. 900—Cast Steel Driving Wheel Center with Mansell Retaining Rings for Atlantic Type (4-4-2) Locomotive. Built for the Baldwin Locomotive Works.

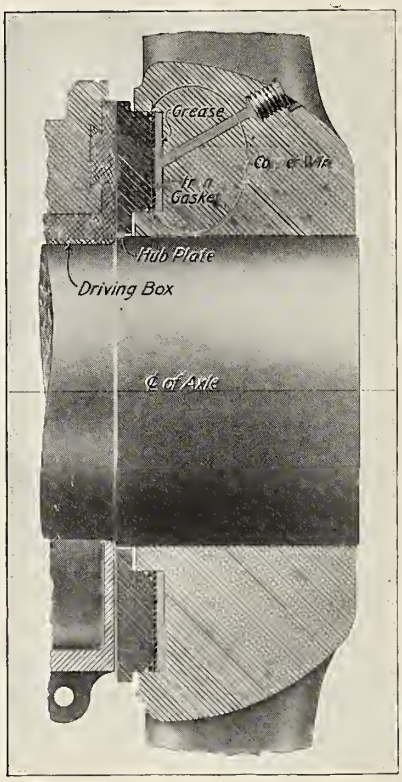

Fig. 901—Smith Adjustable Hub Plate; Smith Locomotive Adjustable Hub Plate Company.

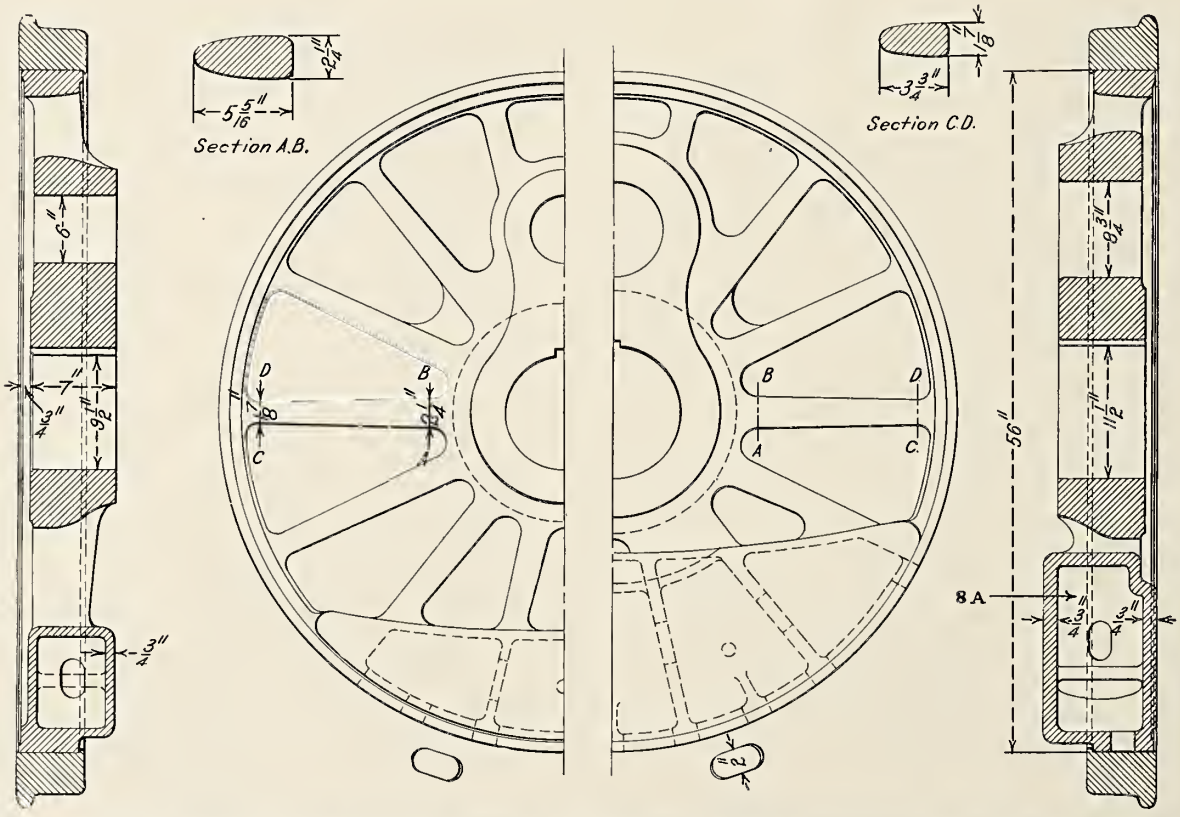

Fig. 902—Cast Steel Driving Wheel Centers for Mikado (2-8-2) Locomotive. Built for the Illinois Central by the Baldwin Locomotive Works.

Numbers Refer to Names of Parts on Page 443.

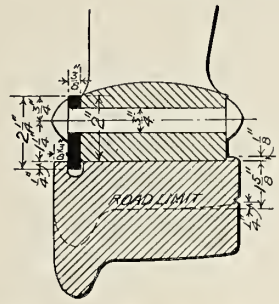

Fig. 903—Flanged Driving Wheel Tire with Riveted Retaining Ring.

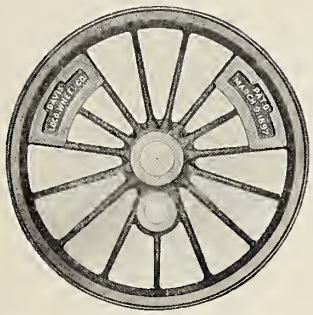

Fig. 905—Davis Counterbalanced Driving Wheel Center; Commonwealth Steel Company.

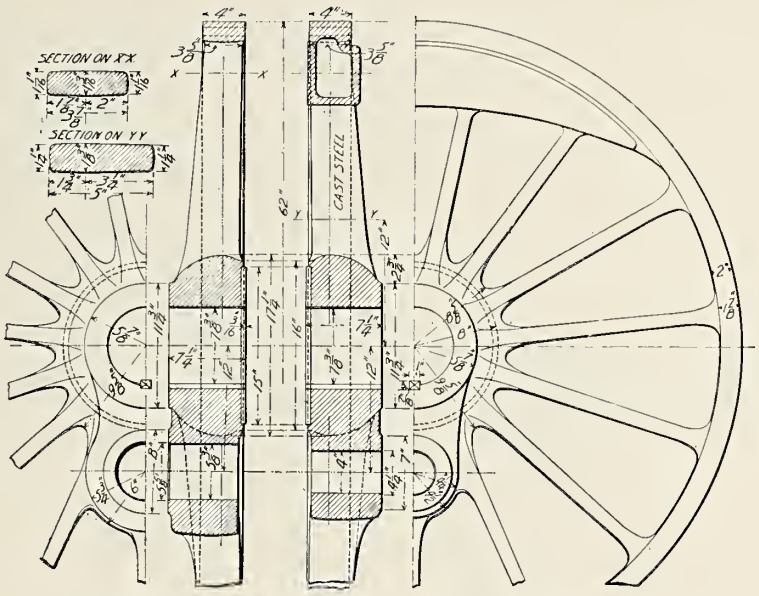

Fig. 904—Cast Steel Driving Wheel Center.

Names of Parts of Axles, Figs. 908-909.

1 *Wheel Seat*
2 *Journal or Bearing*
3 *Center*
4 *Eccentric Seat*
5 *Eccentric Keyway*
6 *Crank Disc, Right*
7 *Crank Pin*
8 *Center Crank*
9 *Crank Disc, Left*

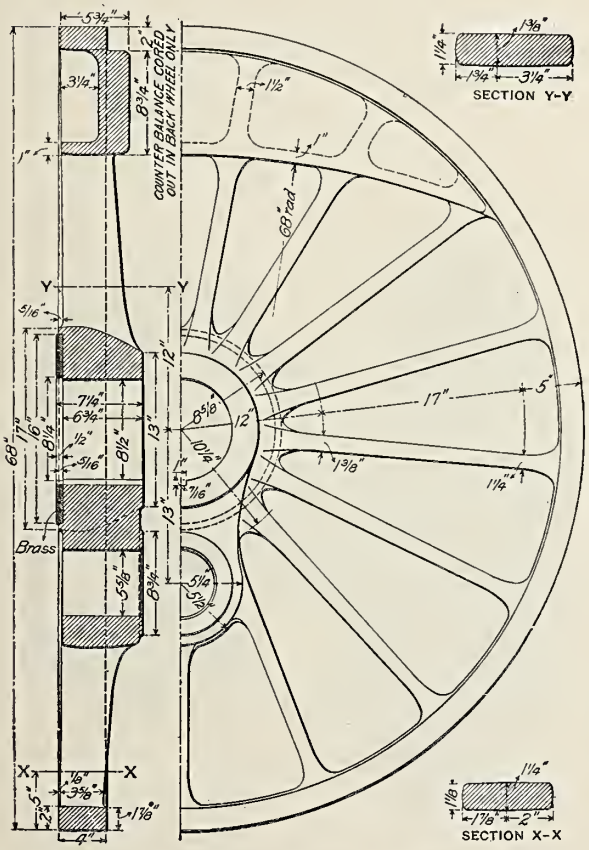

Fig. 906—Cast Steel Driving Wheel Center.

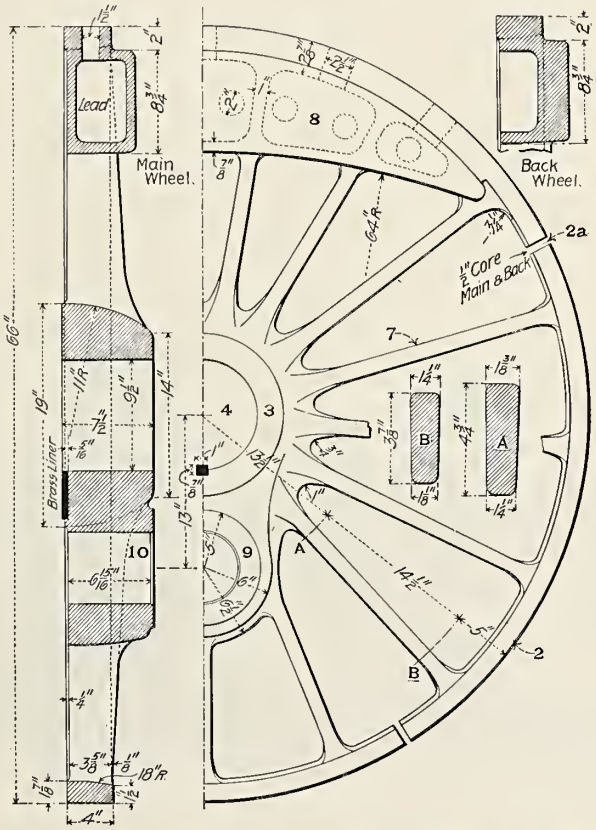

Fig. 907—Driving Wheel Center; Chicago & Alton.

Numbers Refer to Names of Parts on Page 443.

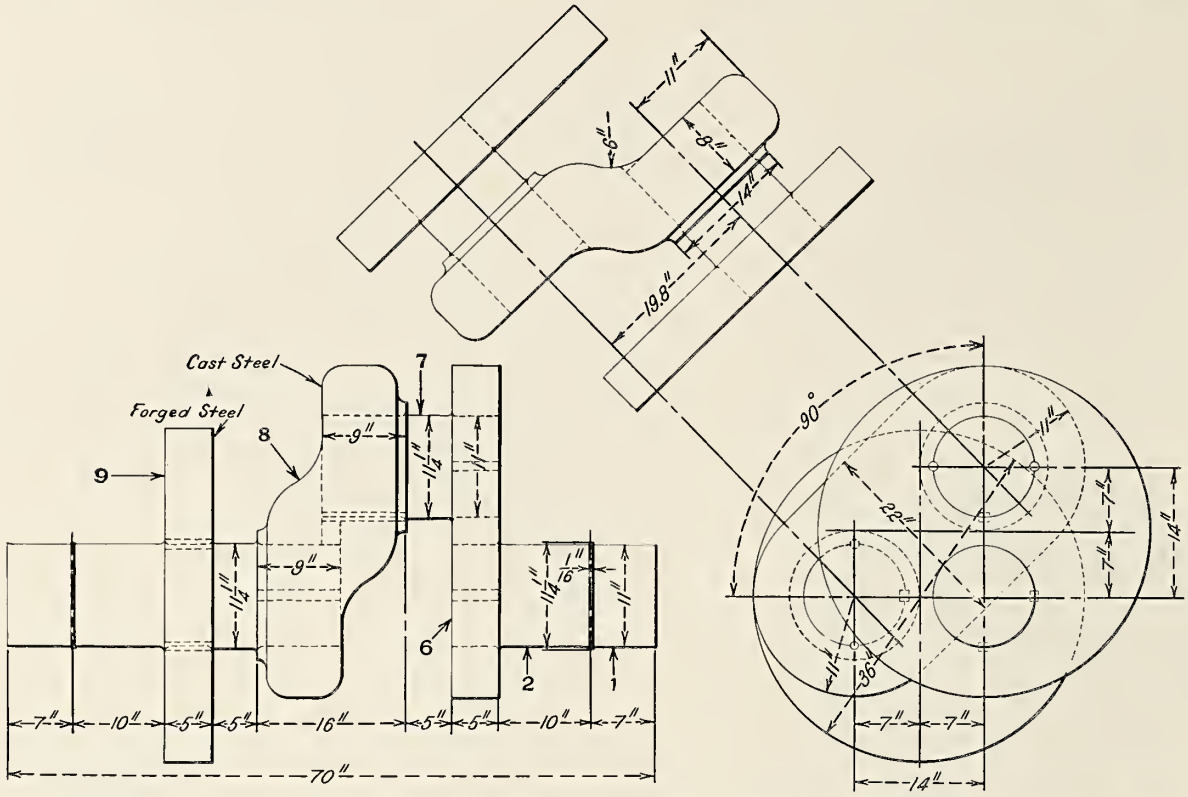

Fig. 908—Built-up Crank Driving Axle for Pacific Type (4-6-2) Balanced Compound Locomotive. Built for the Atchison, Topeka & Santa Fe by the Baldwin Locomotive Works.

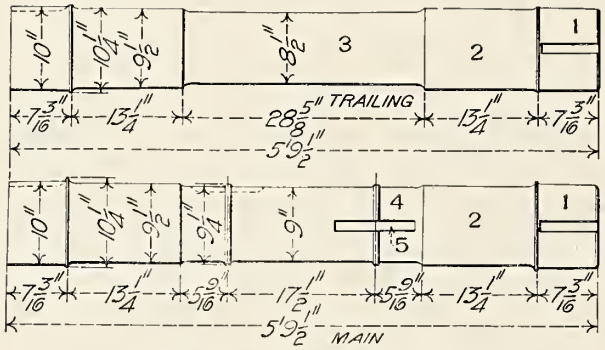

Fig. 909—Driving Axles.

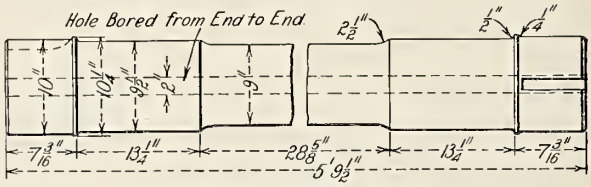

Fig. 910—Driving Axle.

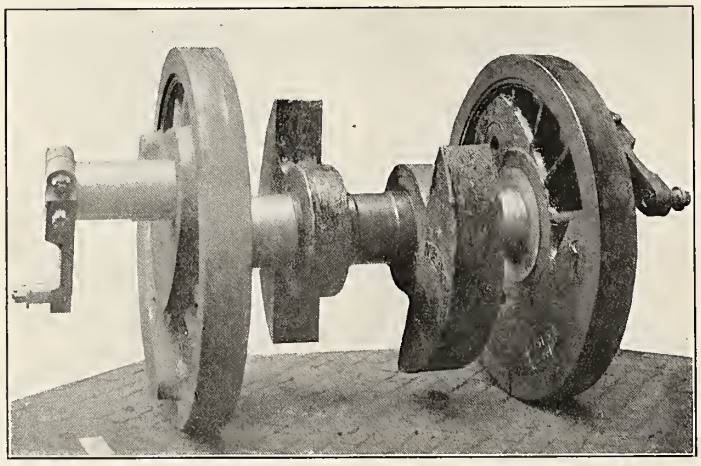

Fig. 911—Main Driving Axle and Counterbalance Weights for Santa Fe Type (2-10-2) Locomotive. Built for the Chicago, Burlington & Quincy by the Baldwin Locomotive Works.

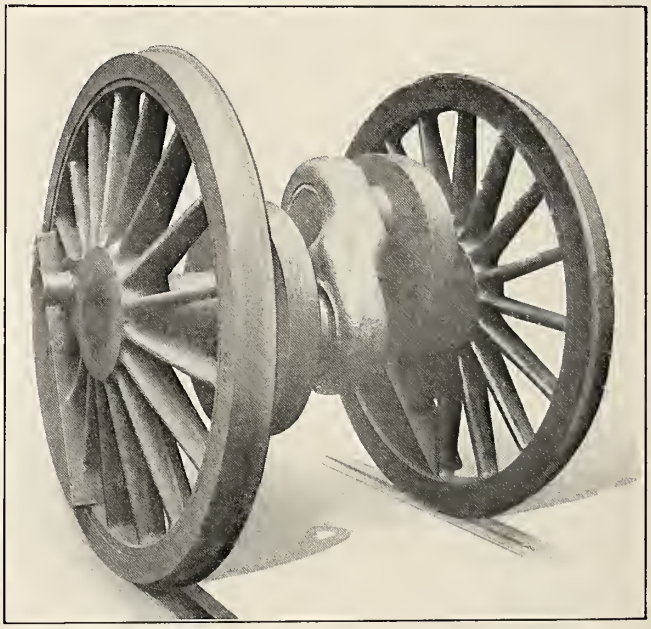

Fig. 912—Main Driving Axle with Inside Cranks for Four-Cylinder Balanced Locomotives; Standard Steel Works Company.

Numbers Refer to Names of Parts on Page 445.

Names of Parts of Driving Boxes, Figs. 913-920.

1 *Hub Liner*
2 *Box*
3 *Crown Brass*
4 *Babbitt Lining*
5 *Saddle Seat*
6 *Cellar Wedge Bolts*
7 *Waste Cavity*
8 *Oil Hole*
9 *Brass Gibs on Shoe and Wedge Wearing Surfaces*
13 *Box Flange*
14 *Oil Grooves*
15 *Lubricating Spring*
16 *Lubricating Pad*

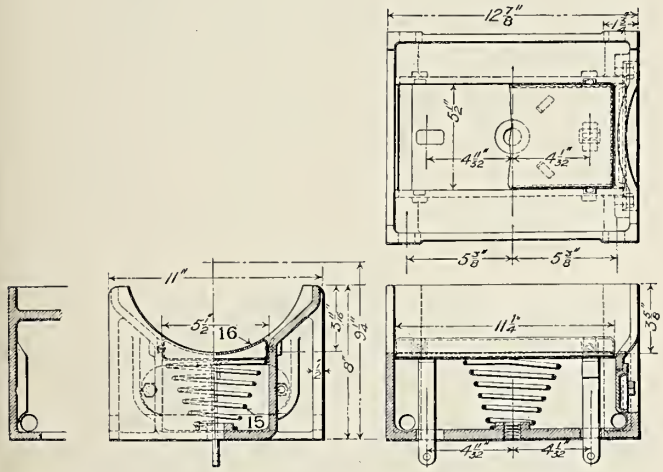

Fig. 913—Driving Box Cellar and Journal Lubricator for Atlantic Type (4-4-2) Locomotive; Pennsylvania Railroad.

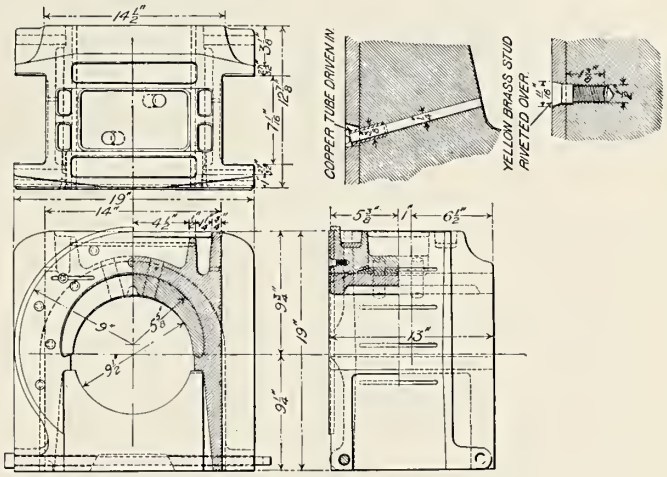

Fig. 914—Cast Steel Driving Box for Atlantic Type (4-4-2) Locomotive; Pennsylvania Railroad.

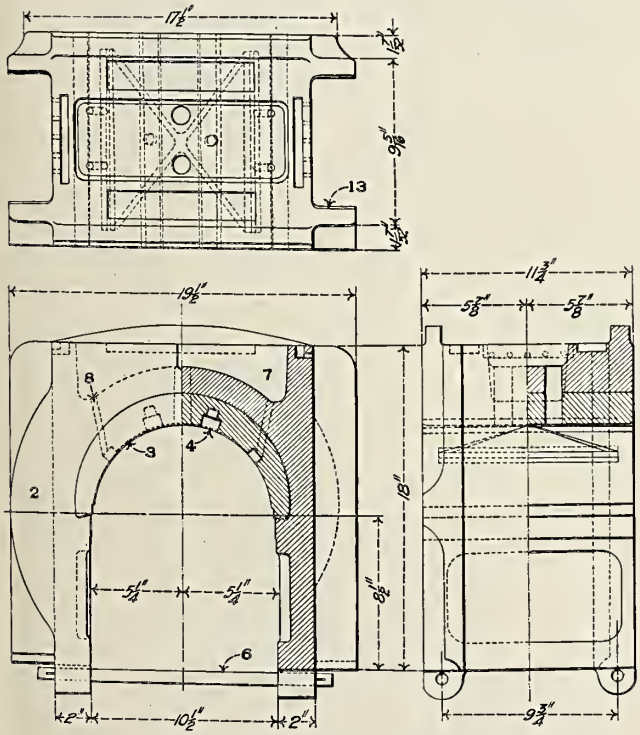

Fig. 915—Driving Box for Consolidation (2-8-0) Locomotive; American Locomotive Company.

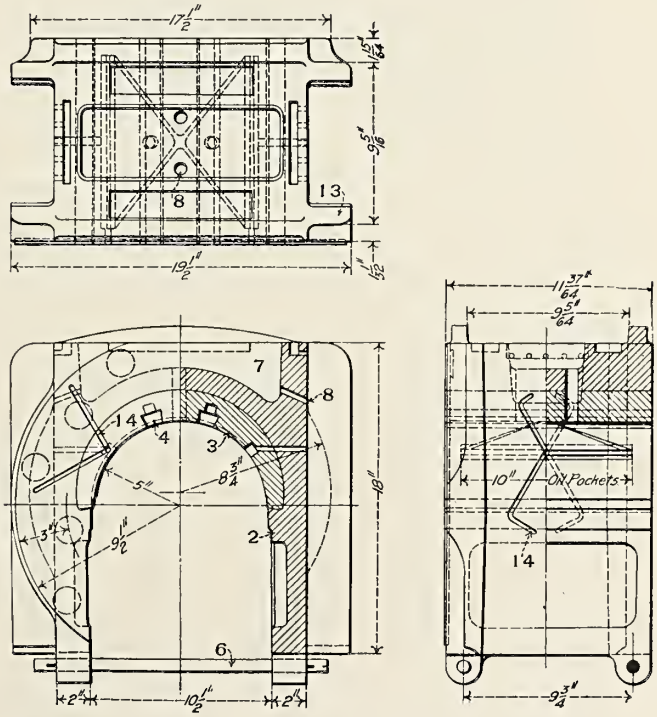

Fig. 916—Cast Steel Driving Box for Consolidation (2-8-0) Locomotive; American Locomotive Company.

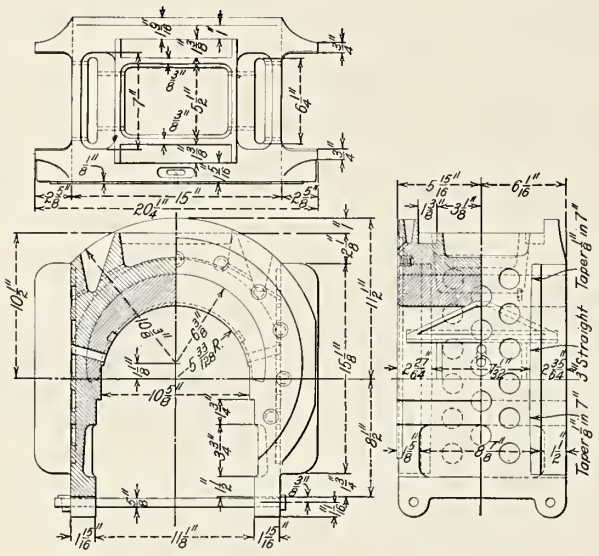

Fig. 917—Cast Steel Main Driving Box; Baldwin Locomotive Works.

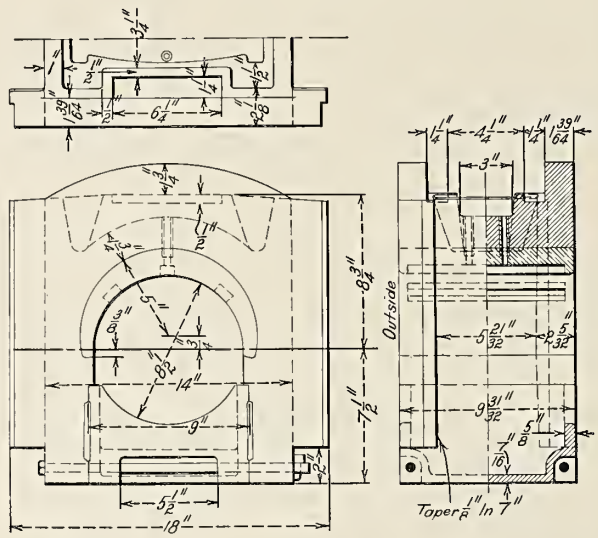

Fig. 918—Cast Iron Driving Box for Oil Lubrition; Baldwin Locomotive Works.

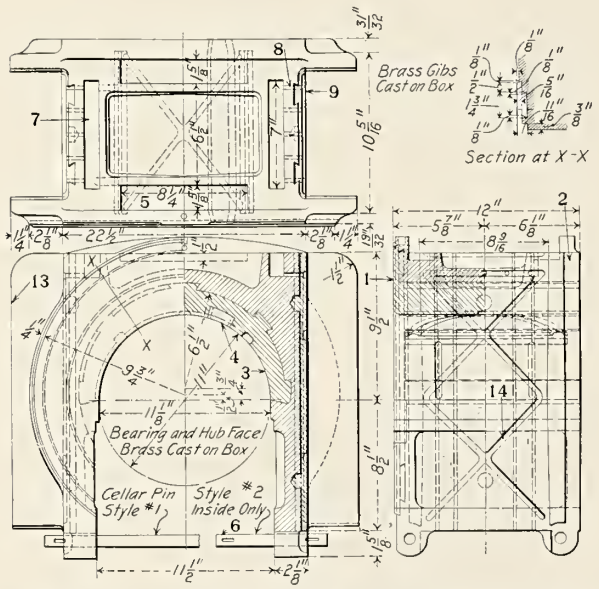

Fig. 919—Cast Steel Driving Box for Pacific Type (4-6-2) Locomotive No. 50,000; American Locomotive Company.

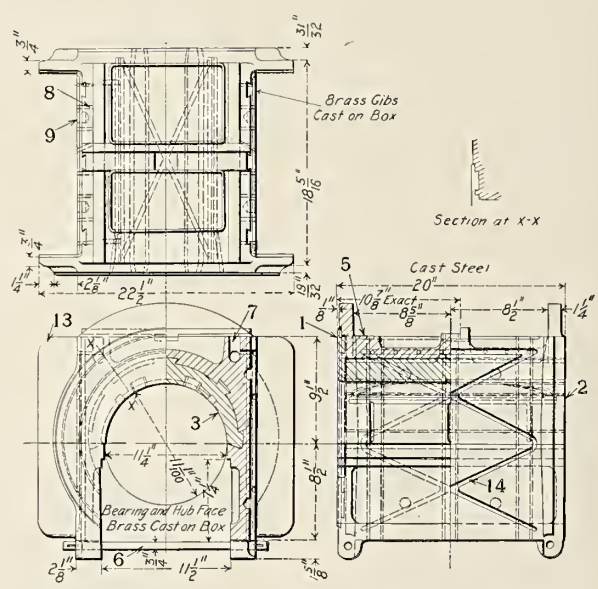

Fig. 920—Cast Steel Long Main Driving Box for Pacific Type (4-6-2) Locomotive; American Locomotive Company.

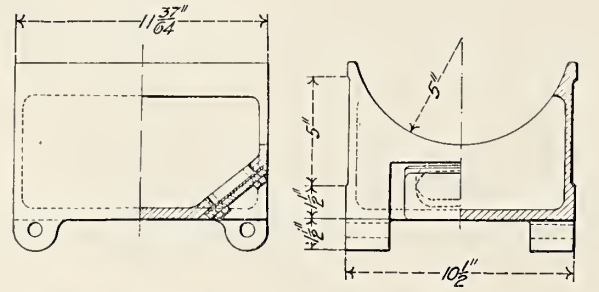

Fig. 921—Driving Box Cellar for Consolidation (2-8-0) Locomotive; American Locomotive Company.

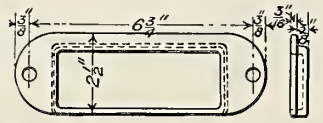

Fig. 922—Lid for Hand-Hole in Driving Box Cellar for Atlantic Type (4-4-2) Locomotive; Pennsylvania Railroad.

Numbers Refer to Names of Parts on Page 447.

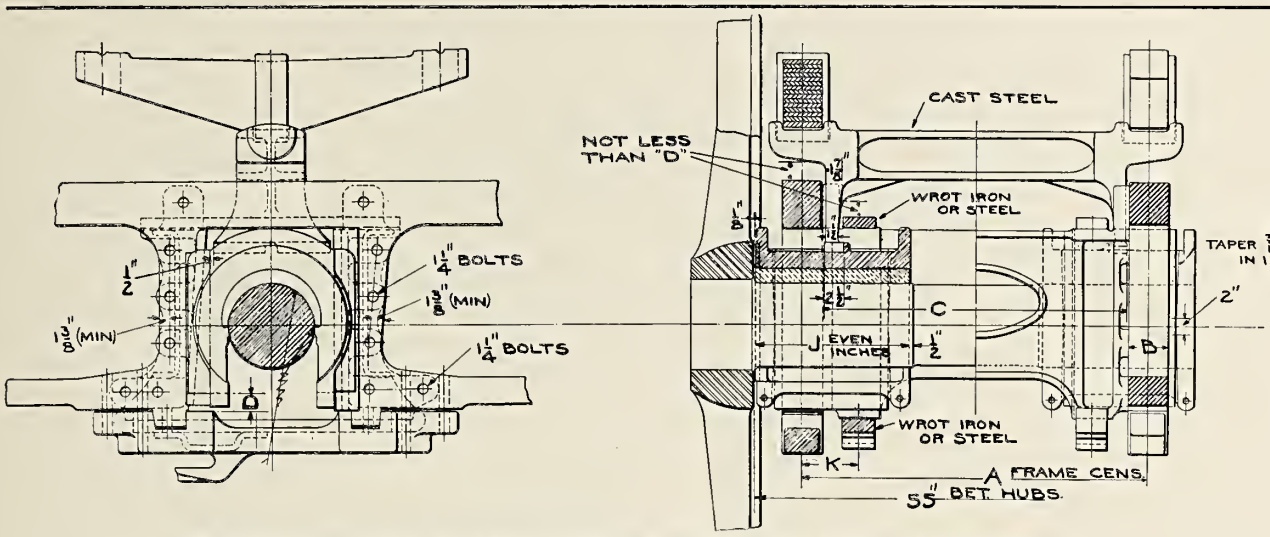

Fig. 923—Cole Extended Main Driving Box; Economy Devices Corporation.

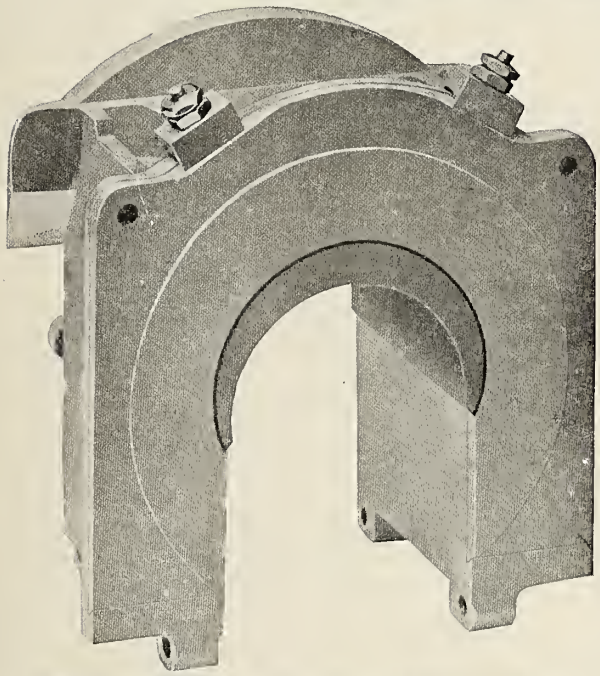

Fig. 924—Lateral Motion Plates; Equipment Improvement Company.

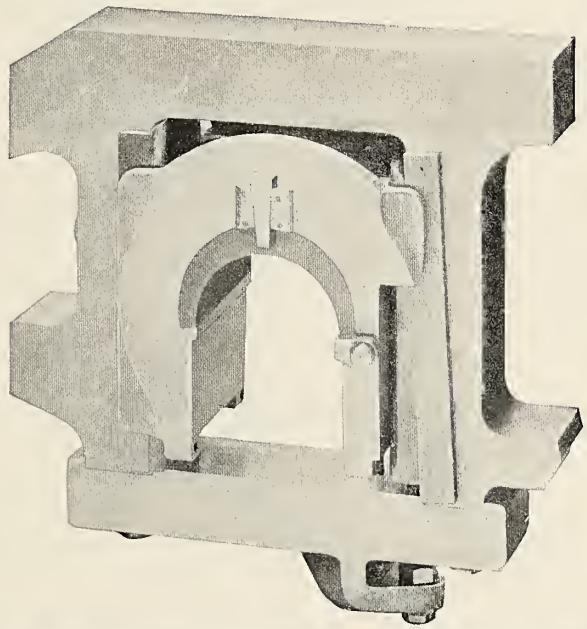

Fig. 925—Removable Driving Box Brass, Flangeless Shoe and Wedge; Equipment Improvement Company.

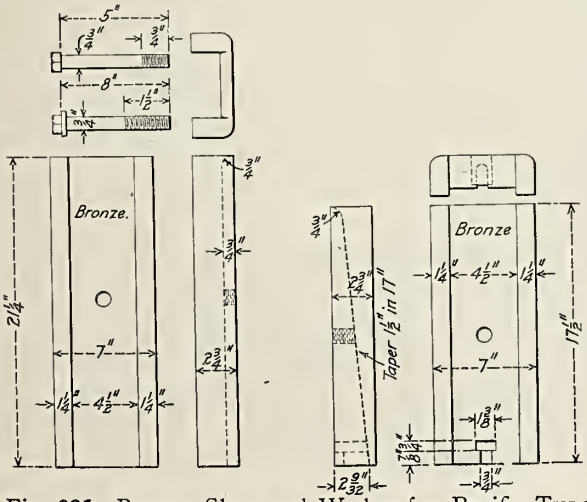

Fig. 926—Bronze Shoe and Wedge for Pacific Type (4-6-2) Locomotive.

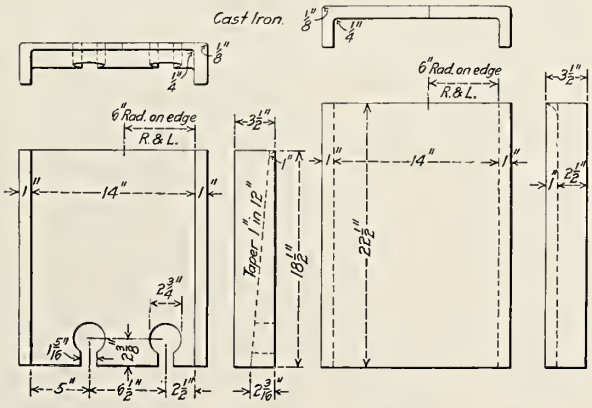

Fig. 927—Cast Iron Shoe and Wedge for Long Main Driving Box on Pacific Type (4-6-2) Locomotive; American Locomotive Company.

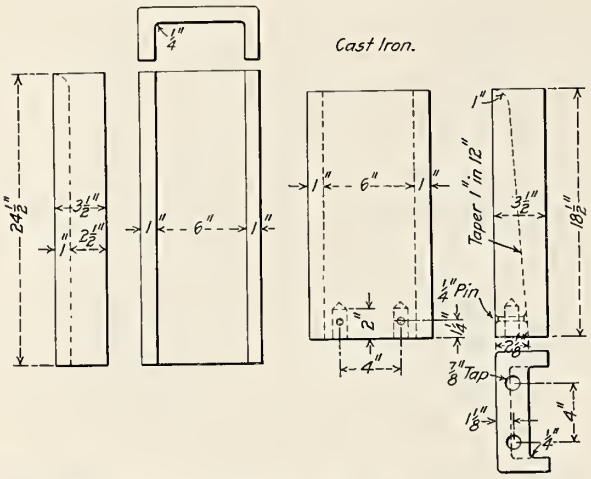

Fig. 928—Cast Iron Shoe and Wedge for Pacific Type (4-6-2) Locomotive No. 50,000; American Locomotive Company.

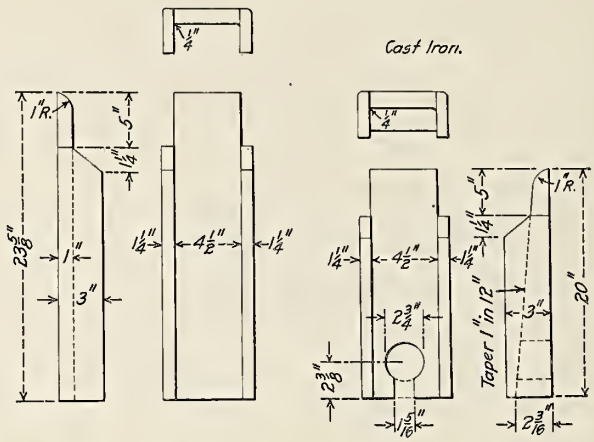

Fig. 929—Cast Iron Shoe and Wedge for Mallet Articulated (2-6-6-2) Compound Locomotive. Built for the New York Central & Hudson River by the American Locomotive Company.

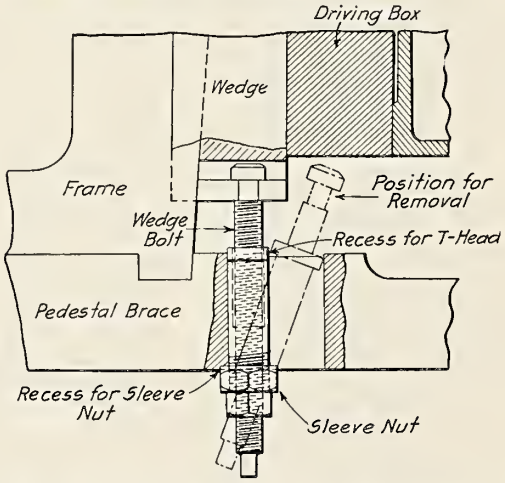

Fig. 930—Removable Wedge Bolt; Wine Railway Appliance Company.

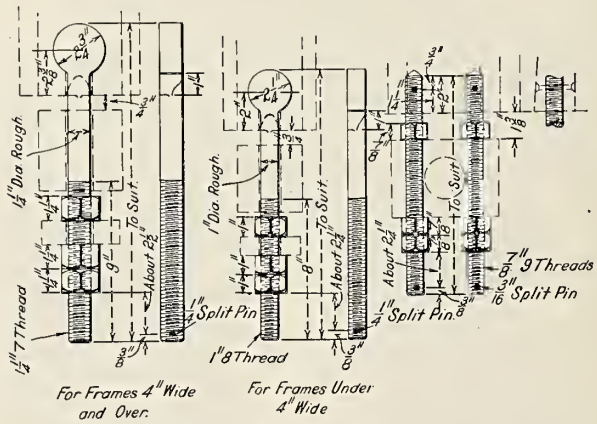

Fig. 931—Standard Wedge Bolts; American Locomotive Company.

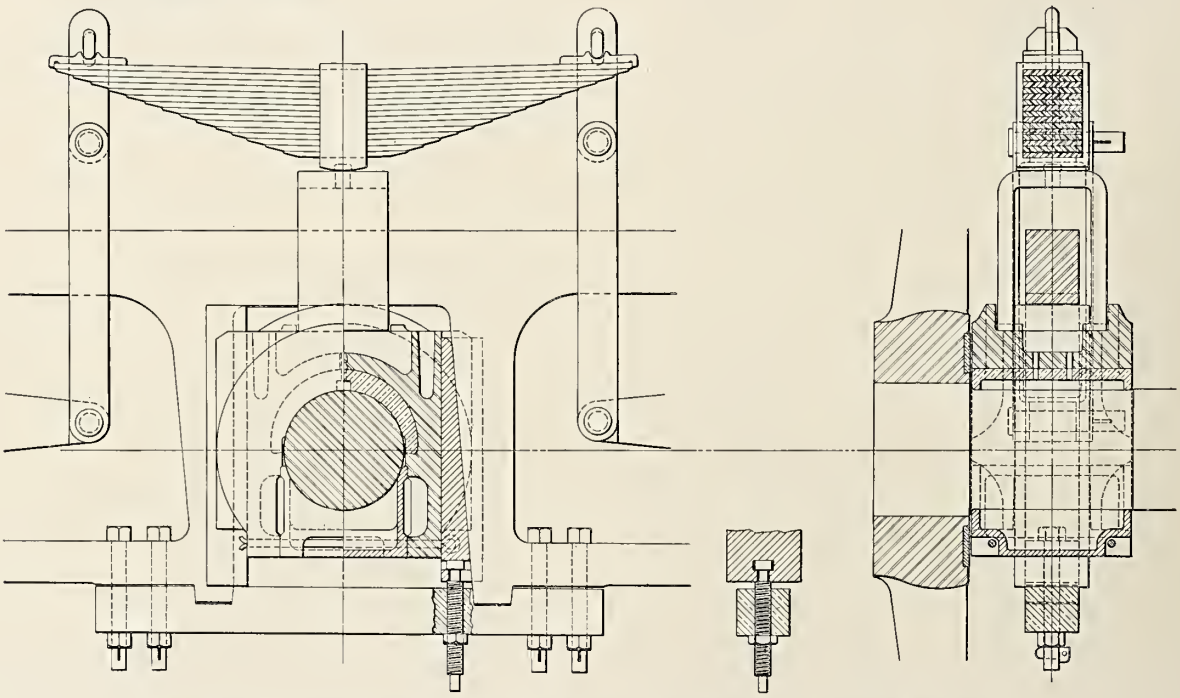

Fig. 932—Driving Box, Wedge and Shoe; Baldwin Locomotive Works.

Names of Parts of Driving Boxes, Figs. 913-920.

1 *Driver Spring*
2 *Spring Hanger*
3 *Spring Band*
4 *Spring Roller*
5 *Driving Box Saddle*
6 *Spring Hanger Gib*
7 *Frame*
7a *Frame Filling Piece*
8 *Driving Box*
9 *Spring Hanger Pin*
10 *Driving Box Saddle*
11 *Driving Box Saddle Pin or Spring Roller*
11a *Driving Box Yoke Hanger*
11b *Driving Box Yoke Hanger Cross-bar*
12 *Driver Equalizer*
13 *Driver Equalizer Fulcrum*
14 *Driver and Truck Equalizer*
15 *Driver and Truck Equalizer Fulcrum*
16 *Equalizer Hanger*
18 *Trailing Truck Spring*
19 *Transverse Equalizer*
20 *Equalizer Safety Strap*

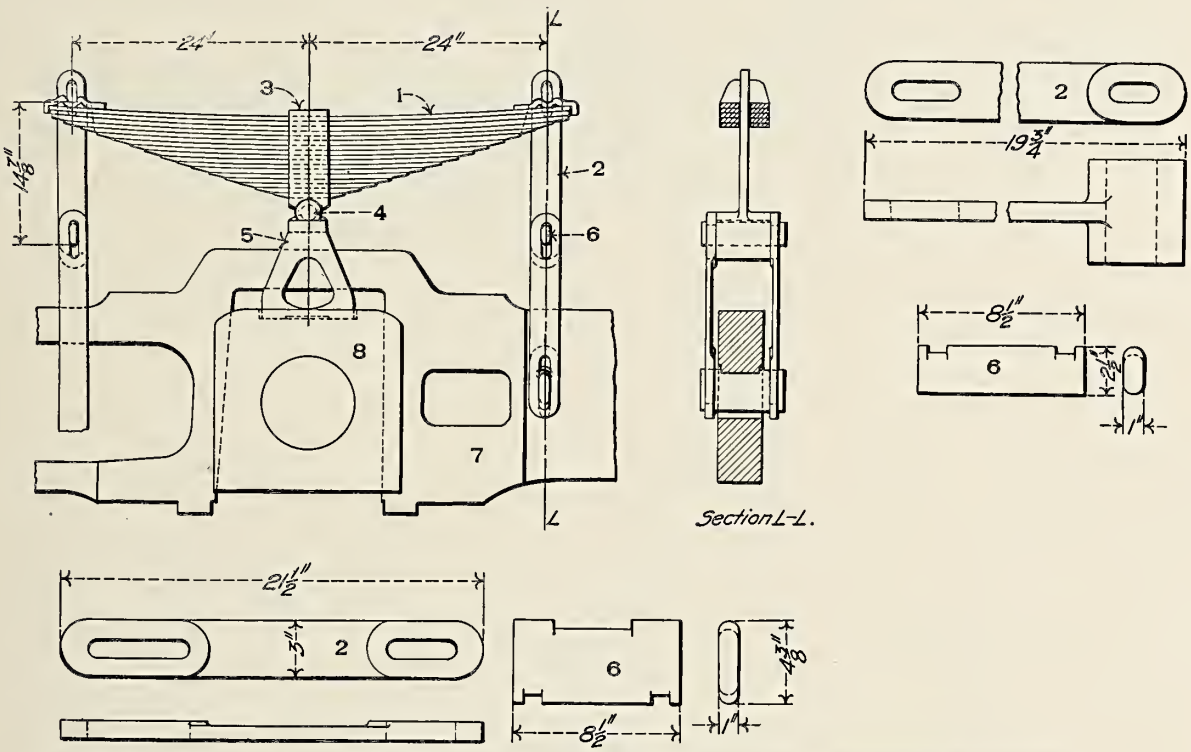

Fig. 933—Spring Rigging for Atlantic Type (4-4-2) Locomotive; Pennsylvania Railroad.

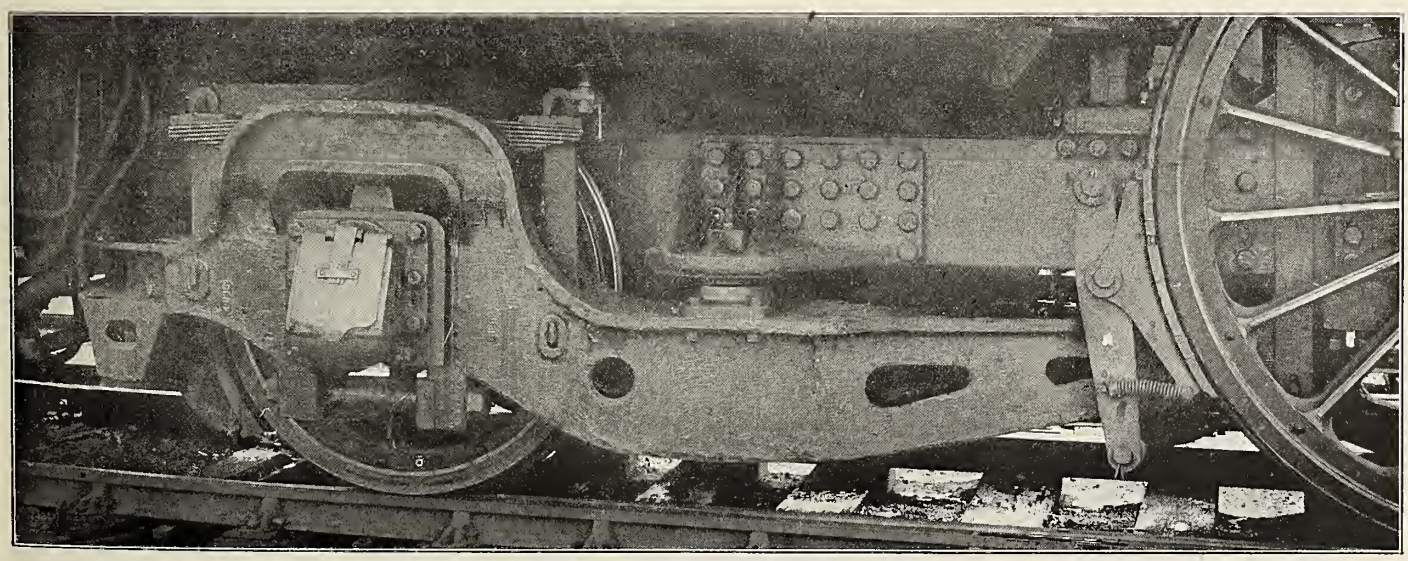

Fig. 934—Trailer Truck Frame Used as Equalizer on Class E-6-s Atlantic Type (4-4-2) Locomotive; Pennsylvania Railroad.

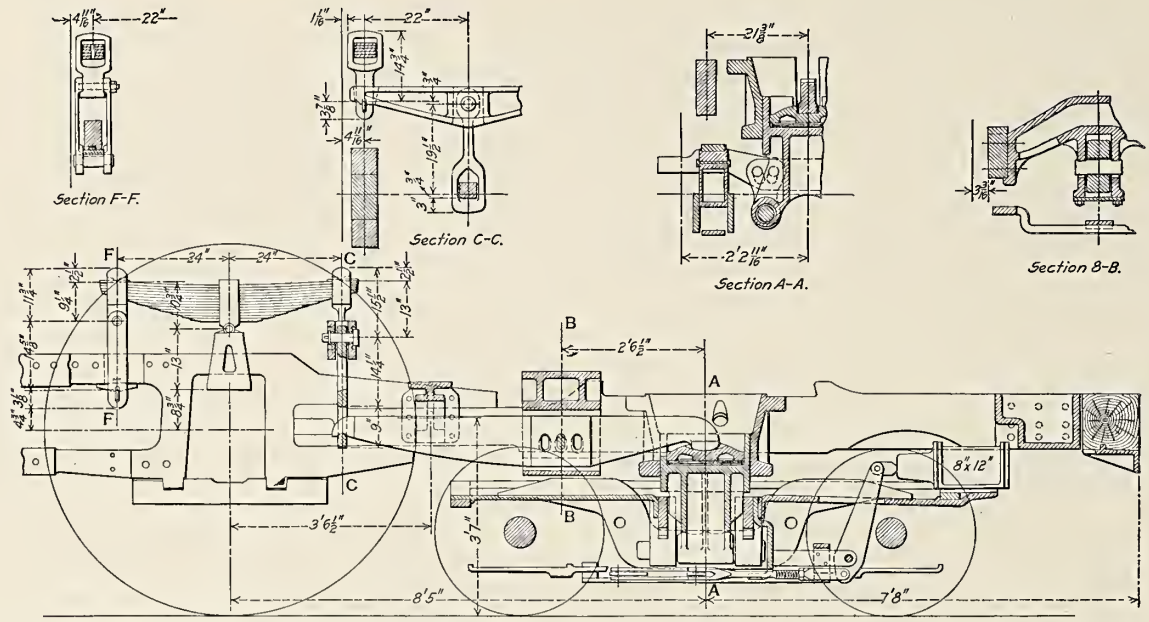

Fig. 935—Equalization Between Front Truck and First Pair of Drivers on Class E-6-s Atlantic Type (4-4-2) Locomotive; Pennsylvania Railroad.

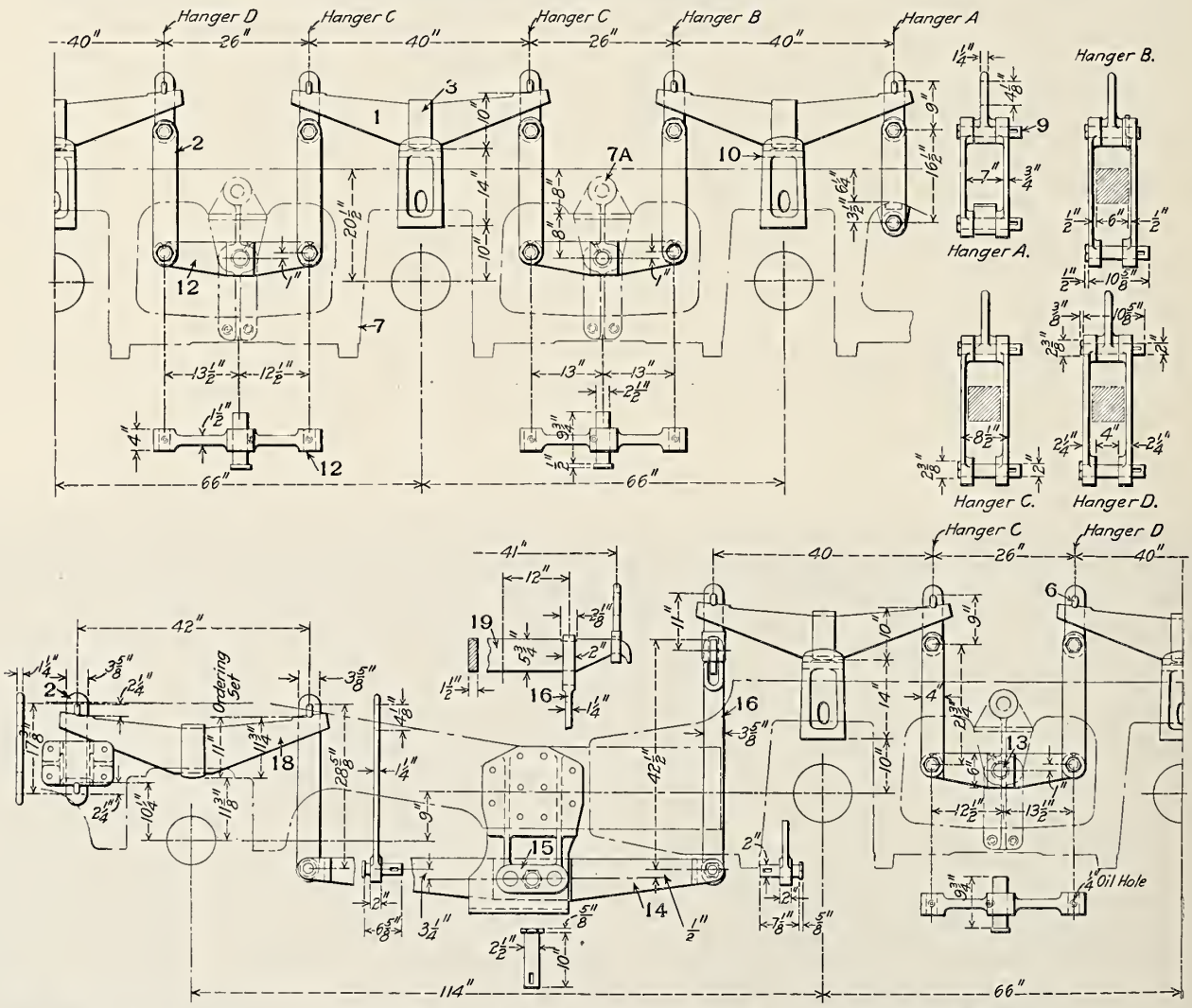

Fig. 936—Spring Rigging for Mountain Type (4-8-2) Locomotive. Built for the Chesapeake & Ohio by the American Locomotive Company.

Numbers Refer to Names of Parts on Page 451.

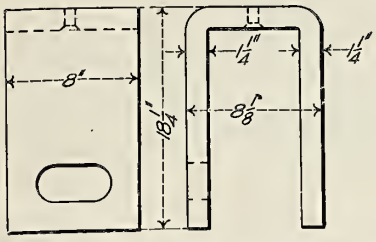

Fig. 937—Driving Box Saddle; American Locomotive Company.

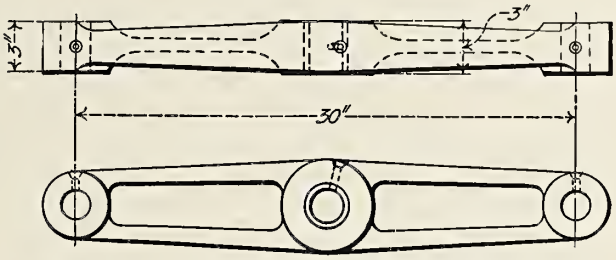

Fig. 938—Driver Equalizer for Twelve-Wheel (4-8-0) Locomotive; American Locomotive Company.

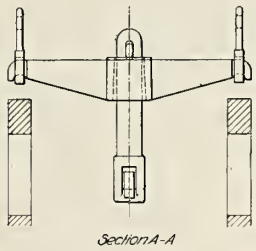

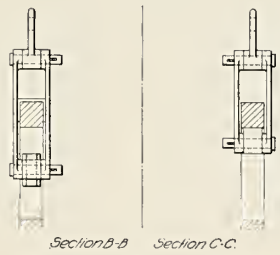

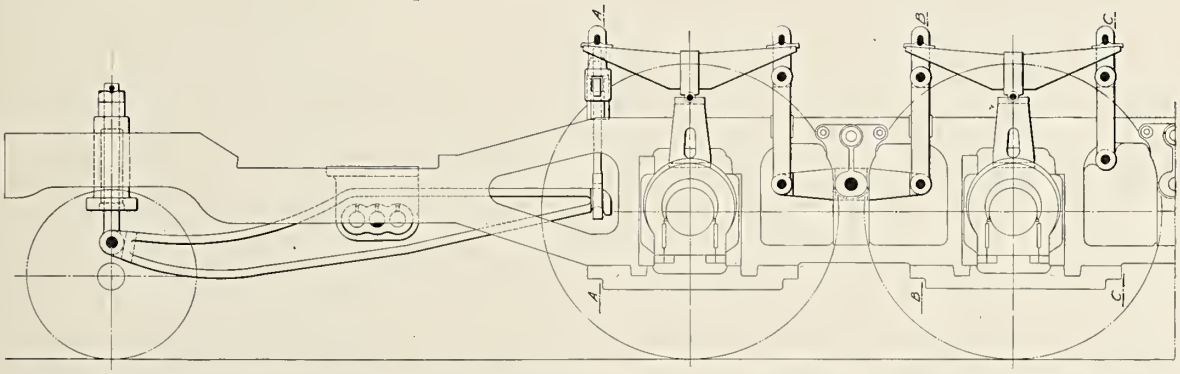

Fig. 939—Spring Rigging for Mikado (2-8-2) Locomotive Showing Equalization Between Front Truck and Forward Pair of Drivers; Baldwin Locomotive Works.

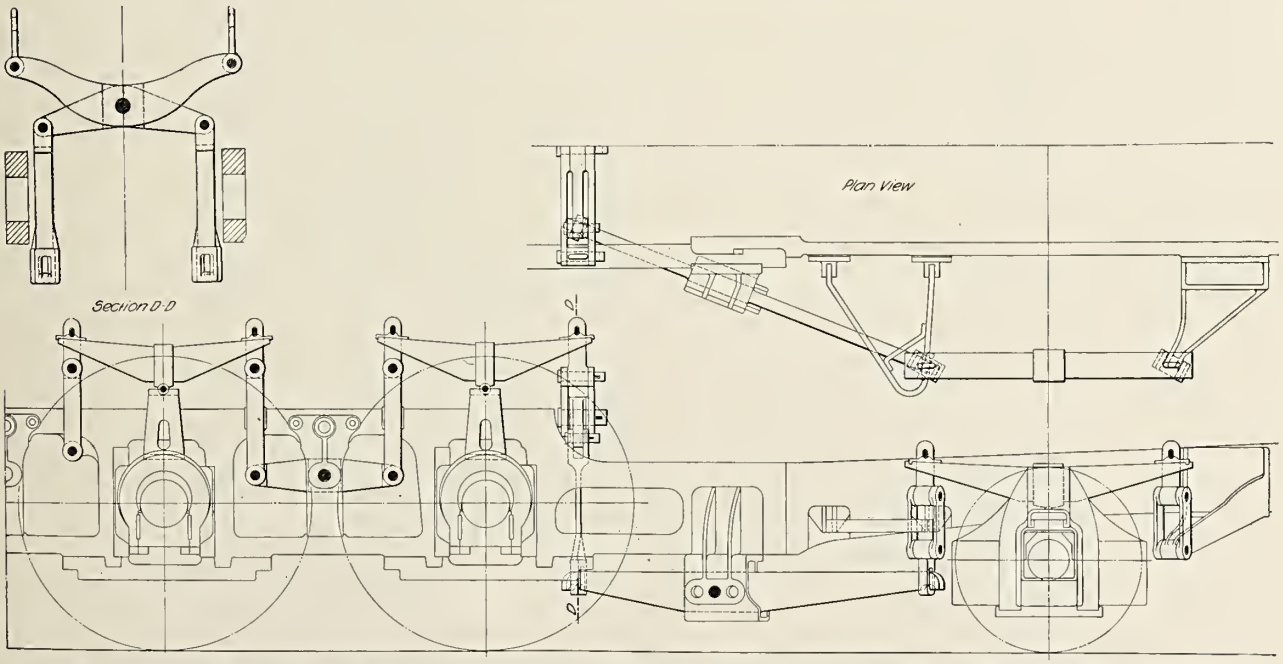

Fig. 940—Spring Rigging for Mikado (2-8-2) Locomotive Showing Equalization Between Trailing Truck and Rear Pair of Drivers; Baldwin Locomotive Works.

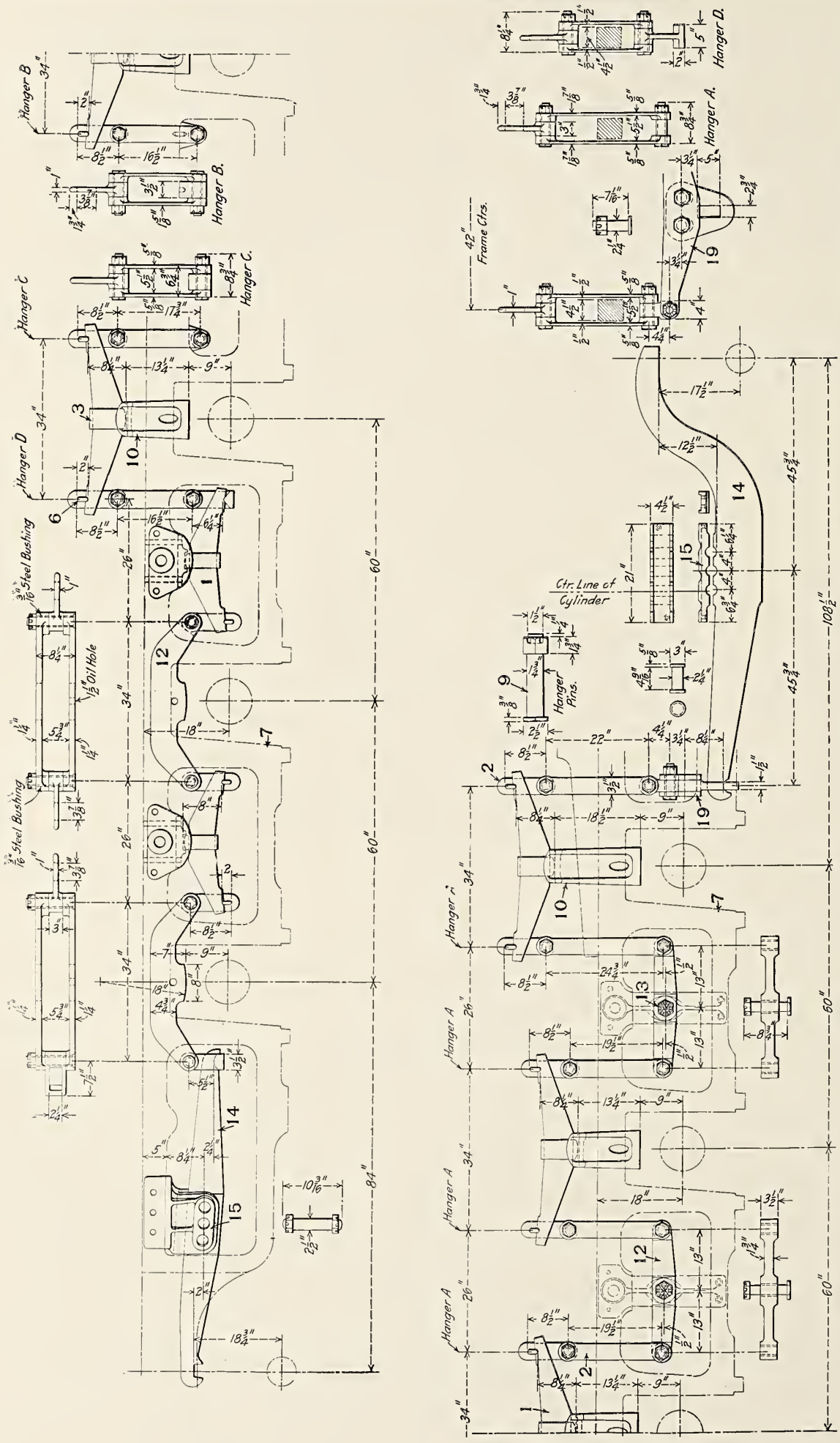

Fig. 941—Spring Rigging for Mallet Articulated (2-6-6-2) Compound Locomotive. Built for the New York Central & Hudson River by the American Locomotive Company.

Numbers Refer to Names of Parts on Page 451.

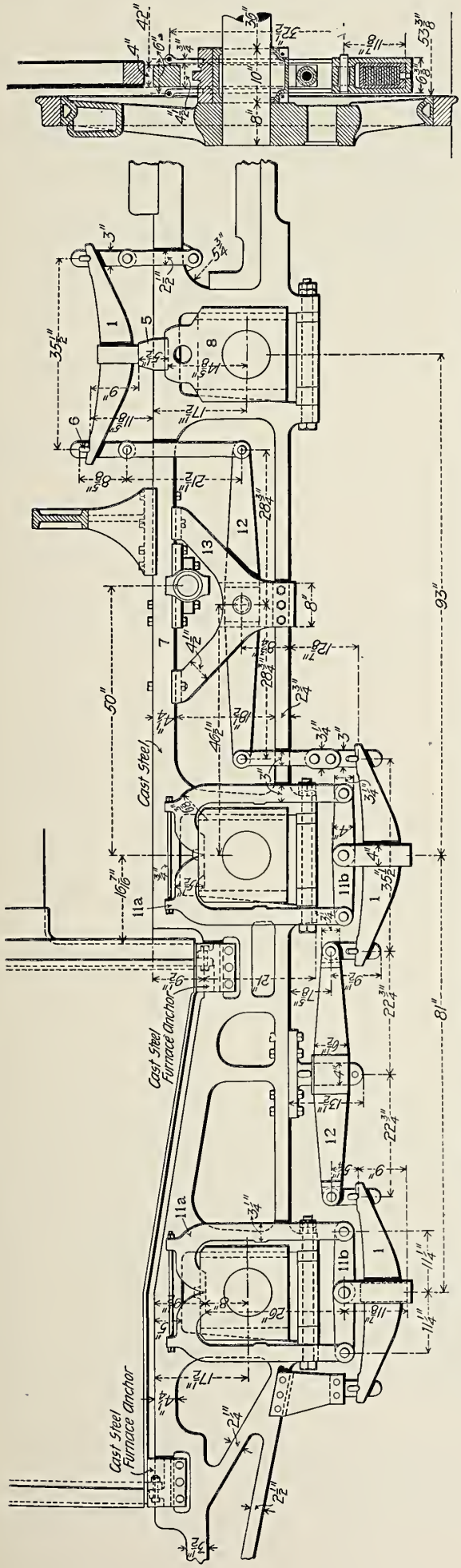

Fig. 942—Spring Rigging for Ten-Wheel (4-6-0) Tandem Compound Locomotive; Atchison, Topeka & Santa Fe.

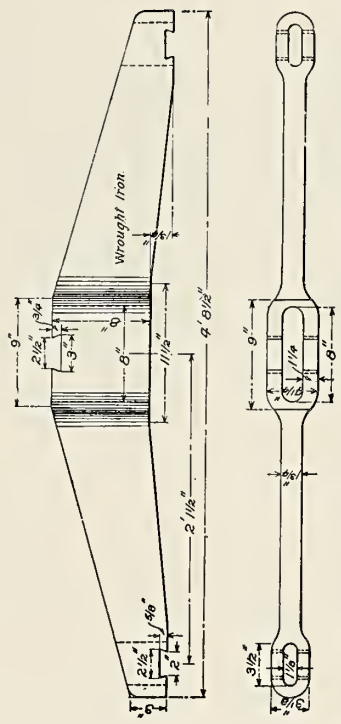

Fig. 944—Equalizer for Eight-Wheel (4-4-0) Locomotive; Cleveland, Cincinnati, Chicago & St. Louis.

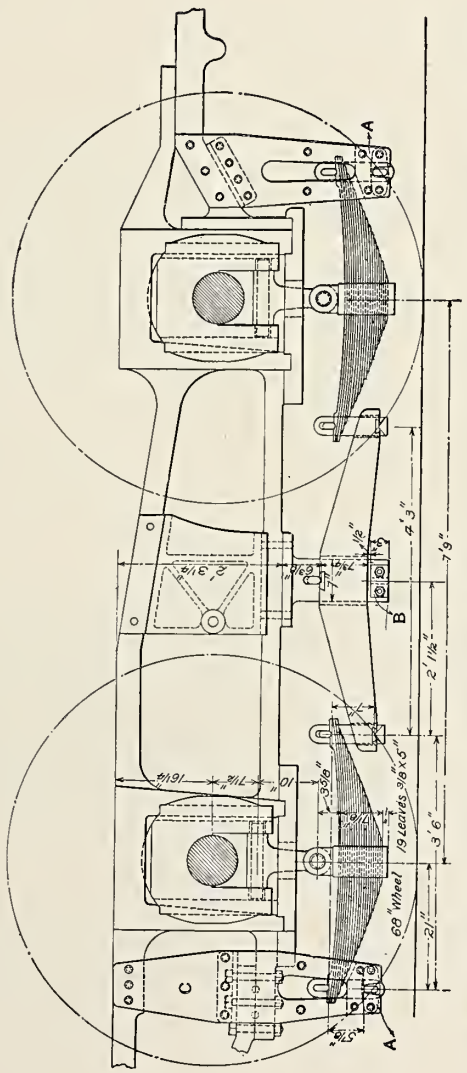

Fig. 943—Spring Rigging for Eight-Wheel (4-4-0) Locomotive; Cleveland, Cincinnati, Chicago & St. Louis.

Numbers Refer to Names of Parts on Page 451.

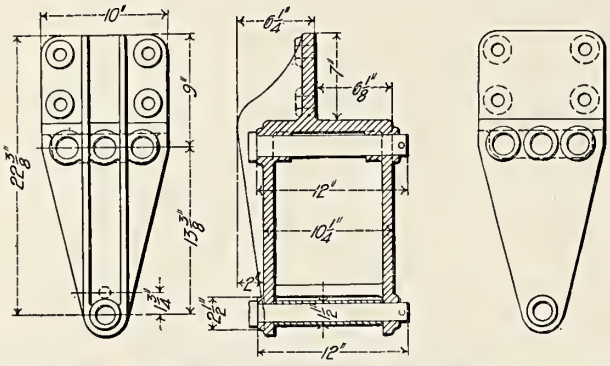

Fig. 945—Equalizer Fulcrum for Ten-Wheel (4-6-0) Locomotive; American Locomotive Company.

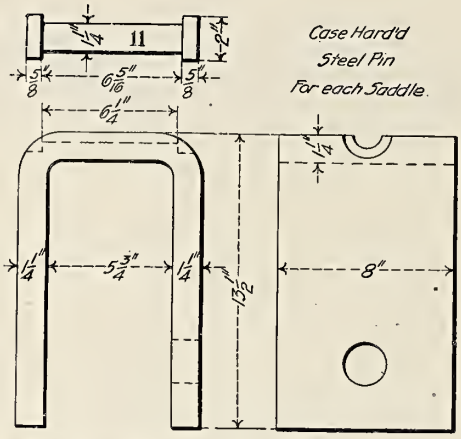

Fig. 946—Driving Box Saddle and Pin.

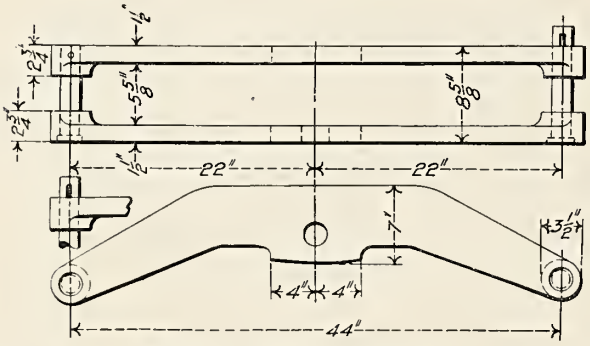

Fig. 947—Driver Equalizer.

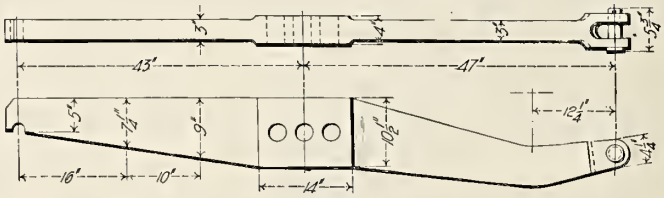

Fig. 948—Forward Driver and Truck Equalizer for Mogul (2-6-0) Locomotive; American Locomotive Company.

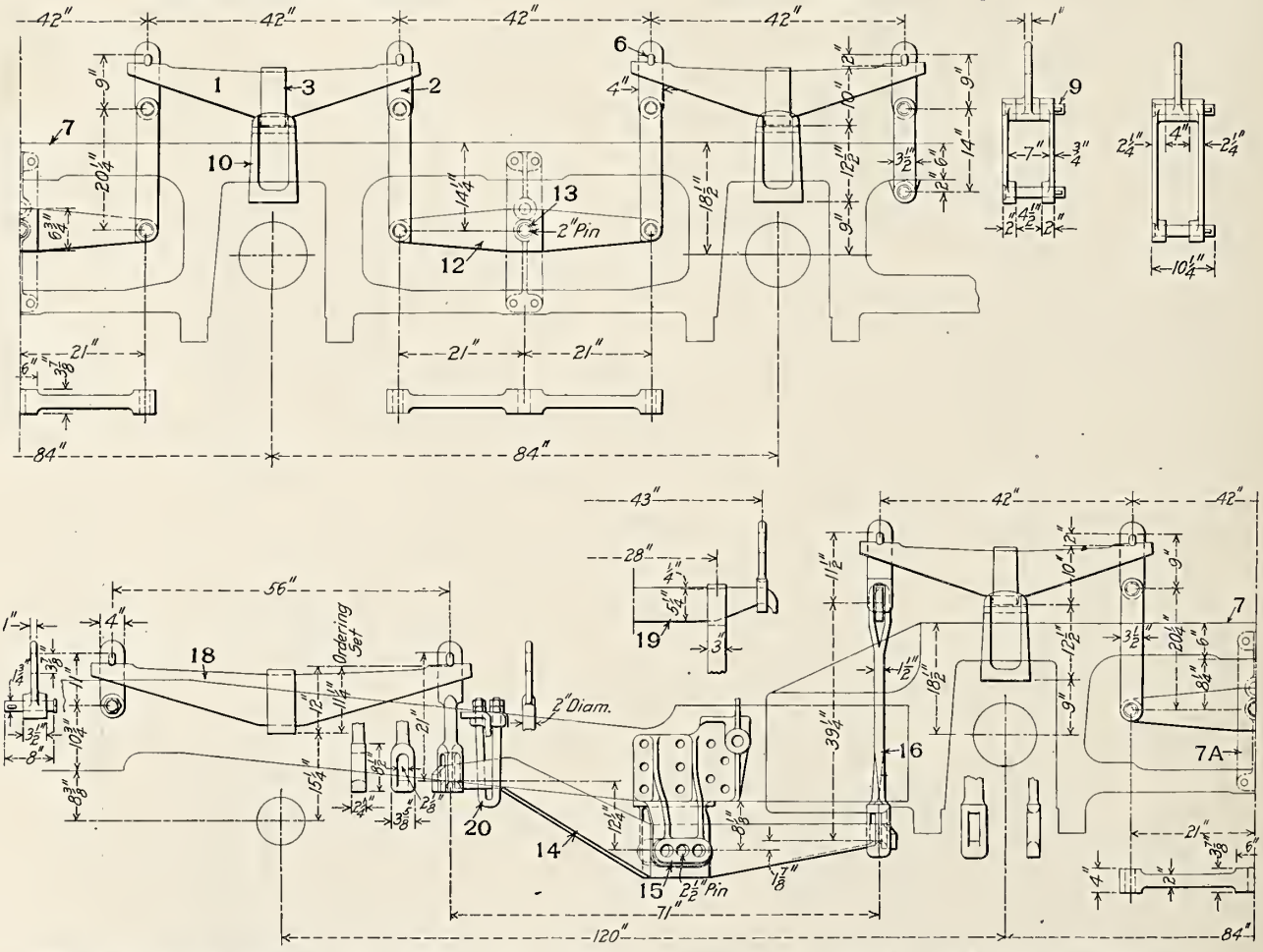

Fig. 949—Spring Rigging for Pacific Type (4-6-2) Locomotive No. 50,000. Built for Experimental Purposes by the American Locomotive Company.

Numbers Refer to Names of Parts on Page 451.

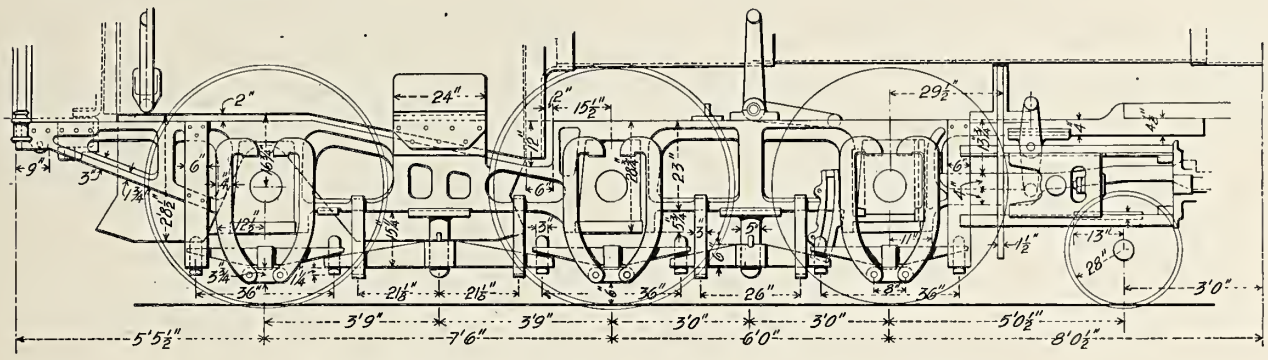

Fig. 950—Spring Rigging for Ten-Wheel (4-6-0) Locomotive.

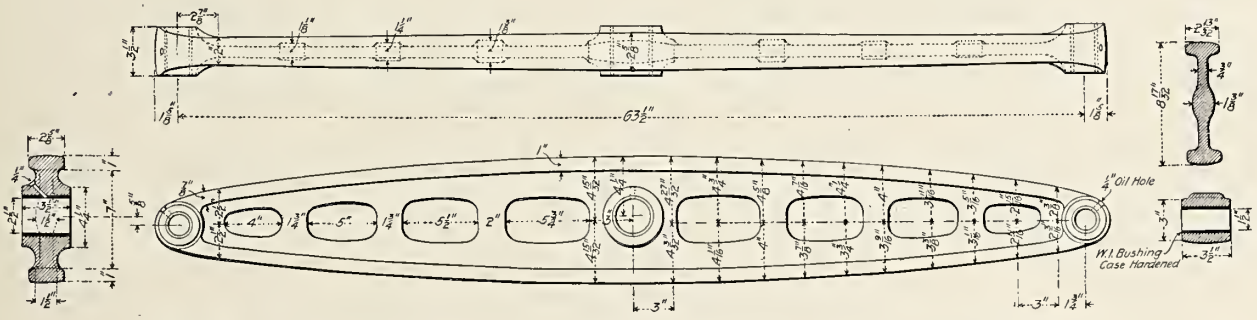

Fig. 951—Cast Steel Equalizer for Eight-Wheel (4-4-0) Locomotive; Chicago & Alton.

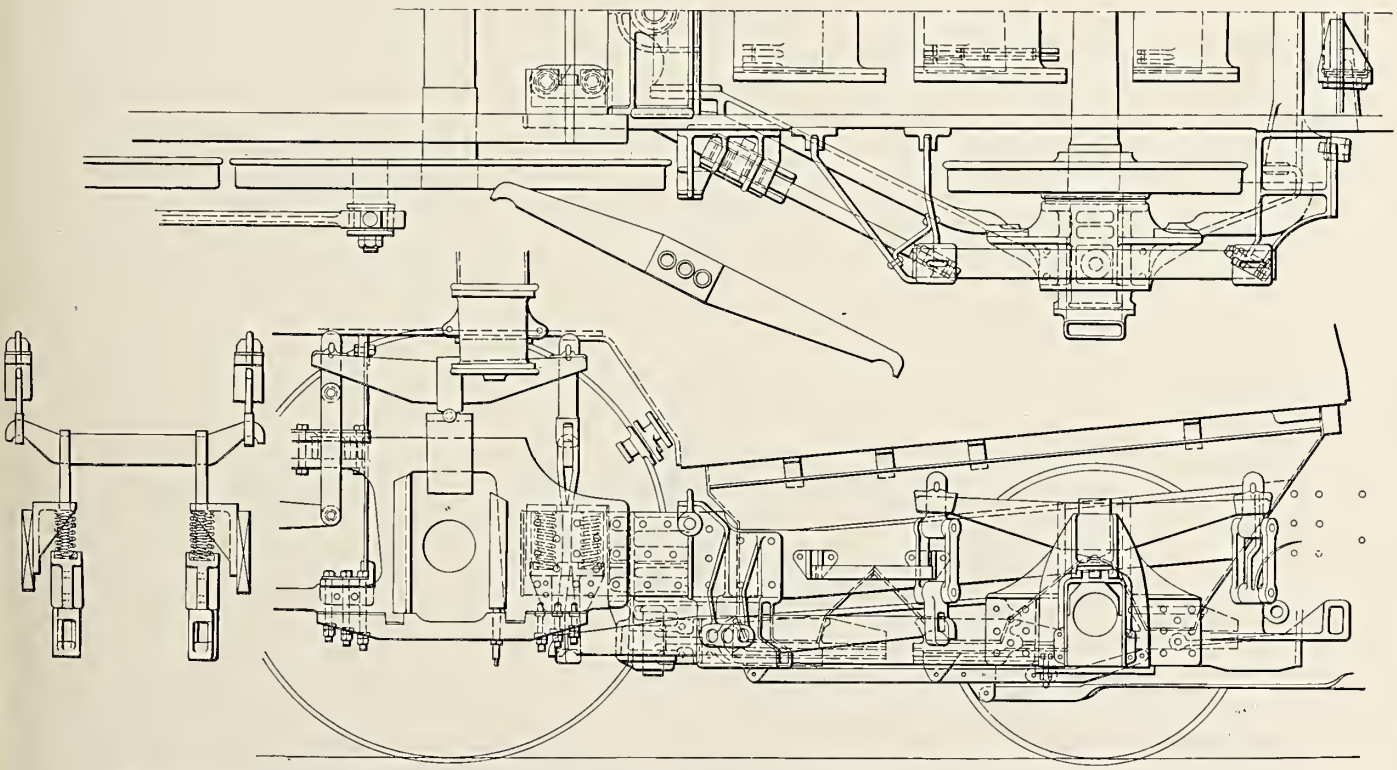

Fig. 952—Equalization of Hodges Trailing Truck for Pacific Type (4-6-2) Locomotive. Built for the Baltimore & Ohio by the Baldwin Locomotive Works.

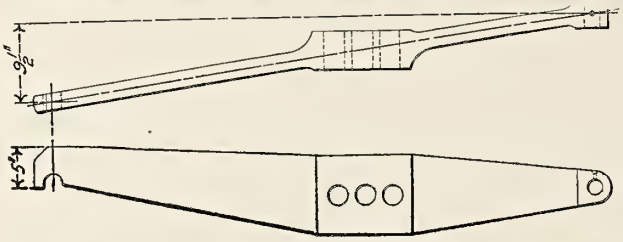

Fig. 953—Trailing Truck Equalizer for Atlantic Type (4-4-2) Locomotive; American Locomotive Company.

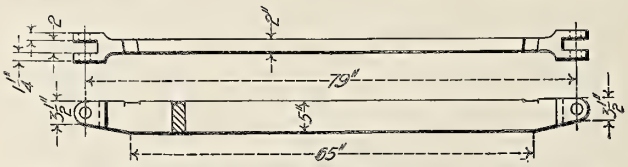

Fig. 954—Back Transverse Equalizer for Atlantic Type (4-4-2) Locomotive; American Locomotive Company.

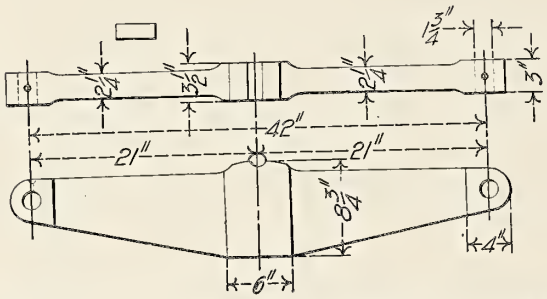

Fig. 955—Driver Equalizer for Atlantic Type (4-4-2) Locomotive; American Locomotive Company.

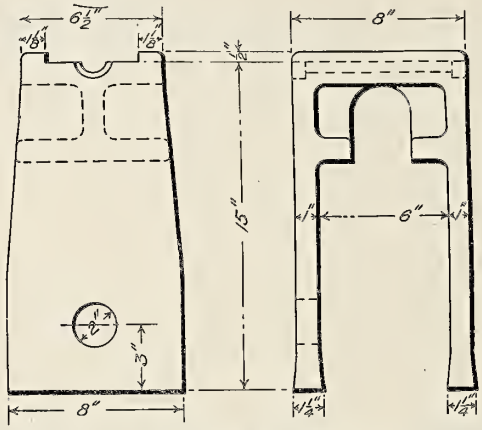

Fig. 956—Driving Box Saddle for Consolidation (2-8-0) Locomotive; American Locomotive Company.

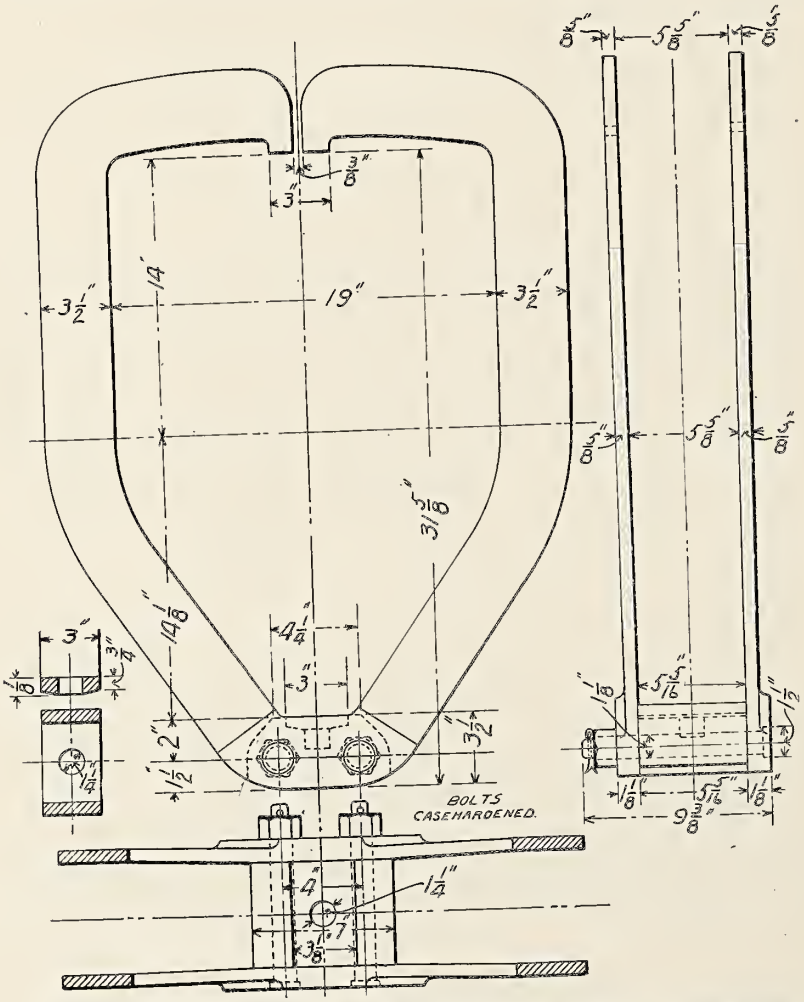

Fig. 957—Spring Hanger for Eight-Wheel (4-4-0) Locomotive; Chicago, Burlington & Quincy.

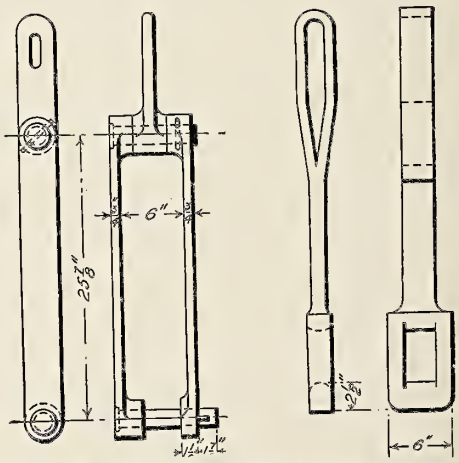

Fig. 958—Spring Hangers for Consolidation (2-8-0) Locomotive; American Locomotive Company.

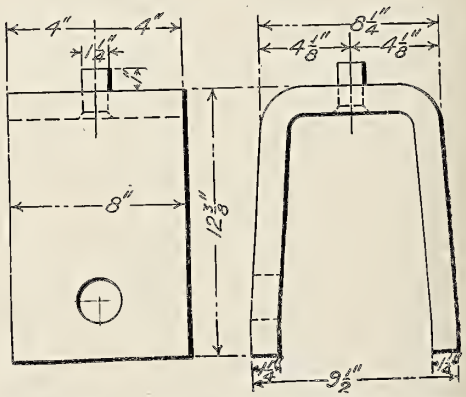

Fig. 959—Driving Box Saddle for Consolidation (2-8-0) Locomotive; American Locomotive Company.

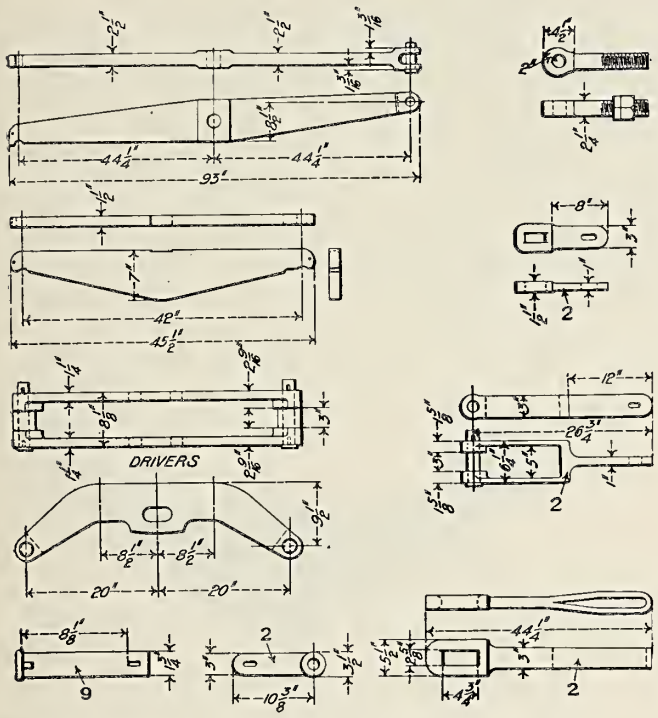

Fig. 960—Equalizers and Spring Hangers for Consolidation (2-8-0) Locomotive; American Locomotive Company.

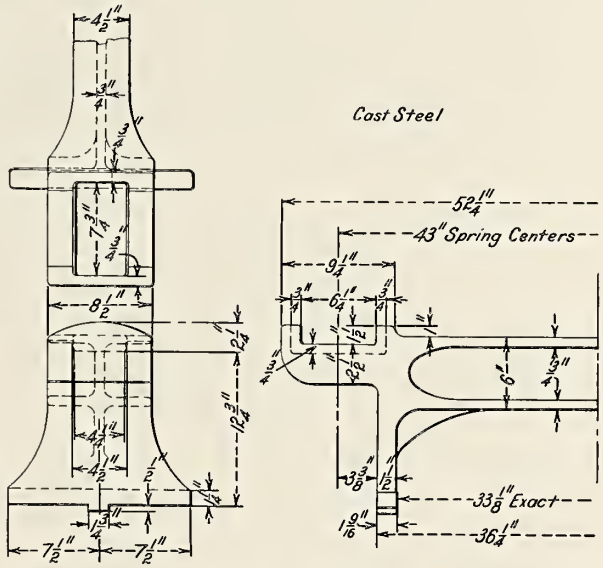

Fig. 961—Driving Box Saddle Used with Long Main Driving Box for Pacific Type (4-6-2) Locomotive; American Locomotive Company.

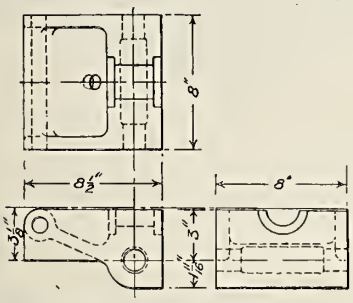

Fig. 962—Equalizer Seat for Atlantic Type (4-4-2) Locomotive; Pennsylvania Railroad.

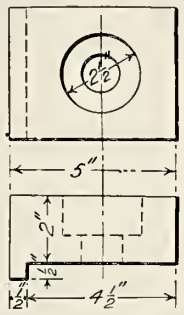

Fig. 963—Equalizer Safety Block for Consolidation (2-8-0) Locomotive.

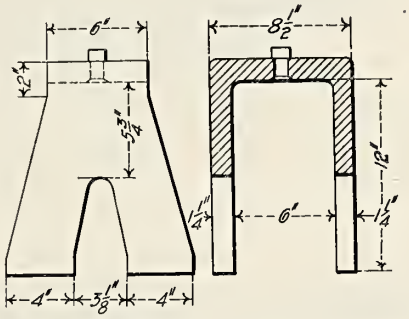

Fig. 964—Driving Box Saddle; American Locomotive Company.

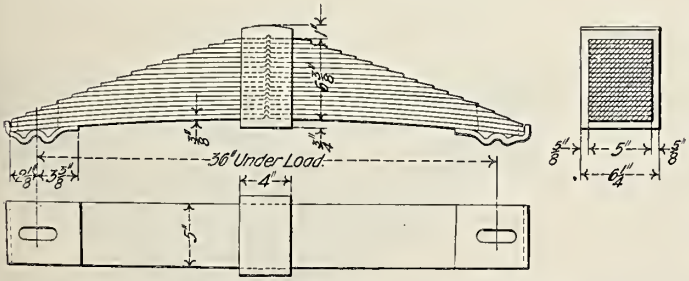

Fig. 965—Semi-Elliptic Engine Truck Spring for Atlantic Type (4-4-2) Locomotive; Pennsylvania Railroad.

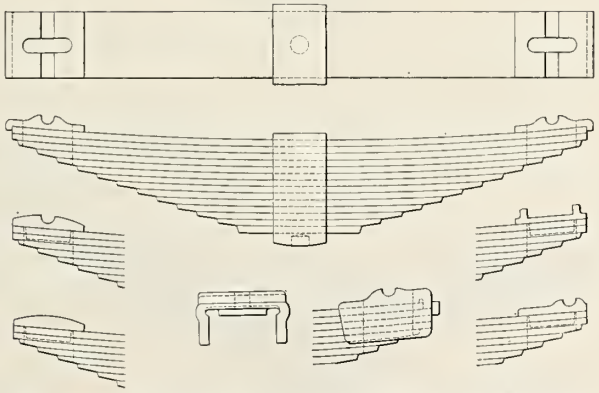

Fig. 966—Semi-Elliptic Driving Spring and Various Styles of Ends; Baldwin Locomotive Works.

Numbers Refer to Names of Parts on Page 451.

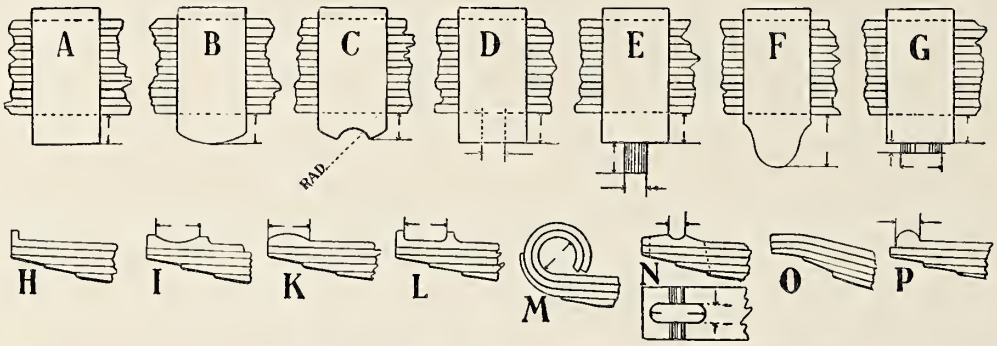

Fig. 967—Styles of Spring Ends and Spring Bands; Union Spring & Manufacturing Company.

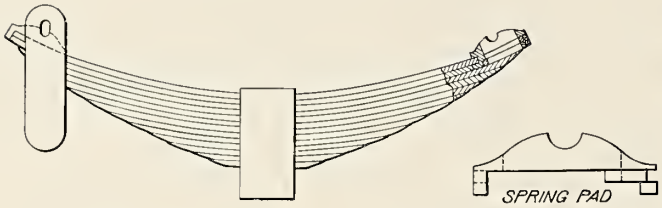

Fig. 968—Driving and Truck Spring.

Fig. 969—Semi-Elliptic Driving Spring; American Steel Foundries.

Fig. 970—Semi-Elliptic Driving Spring with Jaw Band; Standard Steel Works Company.

Fig. 971—Semi-Elliptic Driving Spring with Bulb Ends; Standard Steel Works Company.

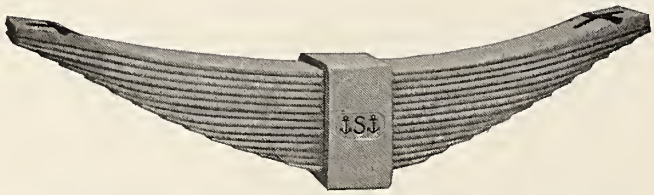

Fig. 972—Semi-Elliptic Driving Spring with Ends Slotted for Sword Hangers; Standard Steel Works Company.

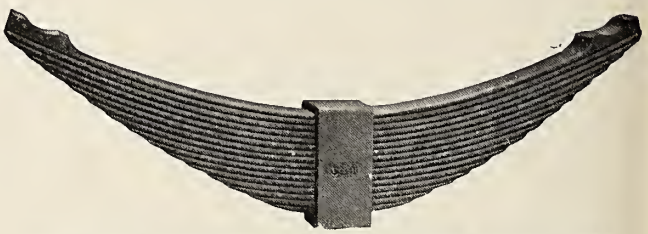

Fig. 973—Semi-Elliptic Engine Truck Spring with Rounded Bearings for Strap Hangers; Standard Steel Works Company.

Fig. 974—Semi-Elliptic Engine Truck Spring with Flat Bearings for Strap Hangers; Standard Steel Works Company.

Fig. 975—Semi-Elliptic Engine Truck Spring with Jaw Ends and Band; Standard Steel Works Company.

Names of Parts of Pony Trucks, Figs. 976-978.

1 *Wheel*
2 *Axle*
3 *Journal Box*
3a *Journal Box Bolt*
3b *Journal Box Bolt Tie Bar*
3c *Journal Box Yoke*
3d *Journal Box Spring*
4 *Truck Frame or Swing Link Frame*
5 *Center Pin*
6 *Center Pin Cap*
7 *Center Pin Guide*
8 *Center Bolt*
9 *Driver and Truck Equalizer*
9a *Equalizer Safety Strap*
10 *Radius Bar*
11 *Radius Bar Brace*
12 *Radius Bar Fulcrum*
13 *Radius Bar Crosstie*
14 *Transverse Equalizer*
15 *Truck Spring*
16 *Truck Spring Hanger*
17 *Engine Frame*
18 *Driver Spring Hanger*
20 *Swing Bolster*
21 *Swing Link*
21a *Swing Link Pin*
23 *Pedestal*
24 *Pedestal Tie Bar*
24a *Pedestal Cross Brace*

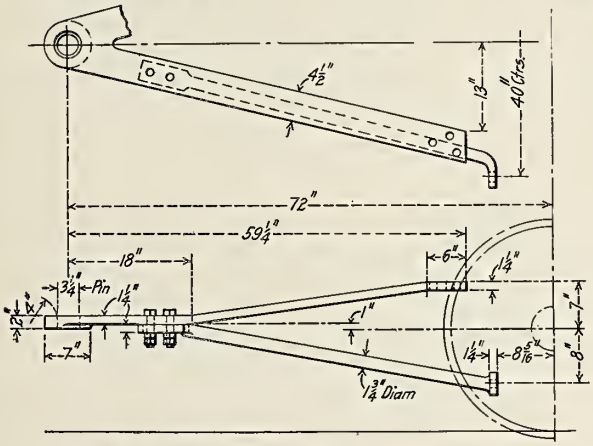

Fig. 976—Pony Truck Radius Bar.

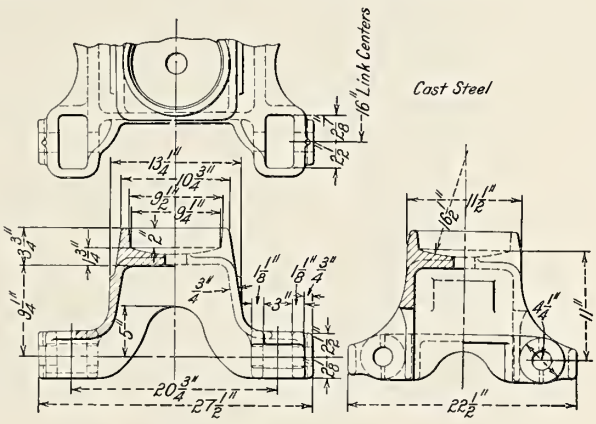

Fig. 977—Pony Truck Swing Bolster.

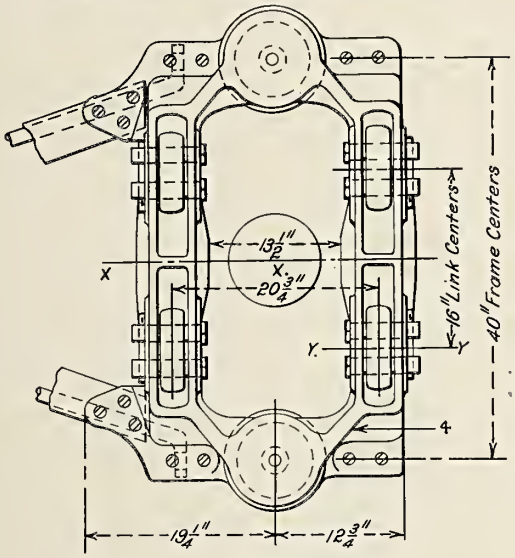

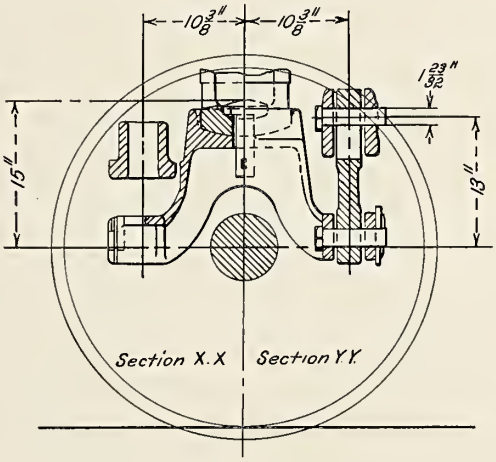

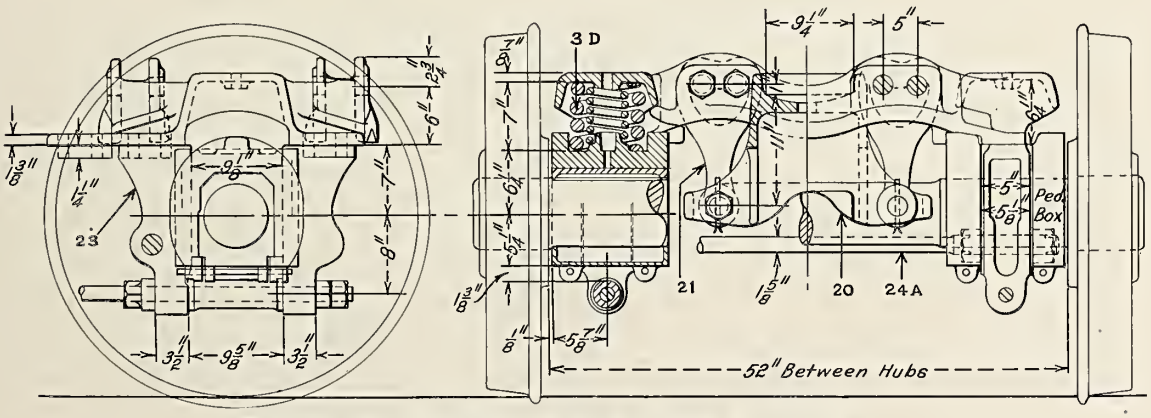

Fig. 978—Pony Truck for Mikado (2-8-2) Locomotive.

Figs. 976-978 are Details of Pony Truck for Mikado (2-8-2) Locomotive. Built for the Chesapeake & Ohio by the American Locomotive Company.

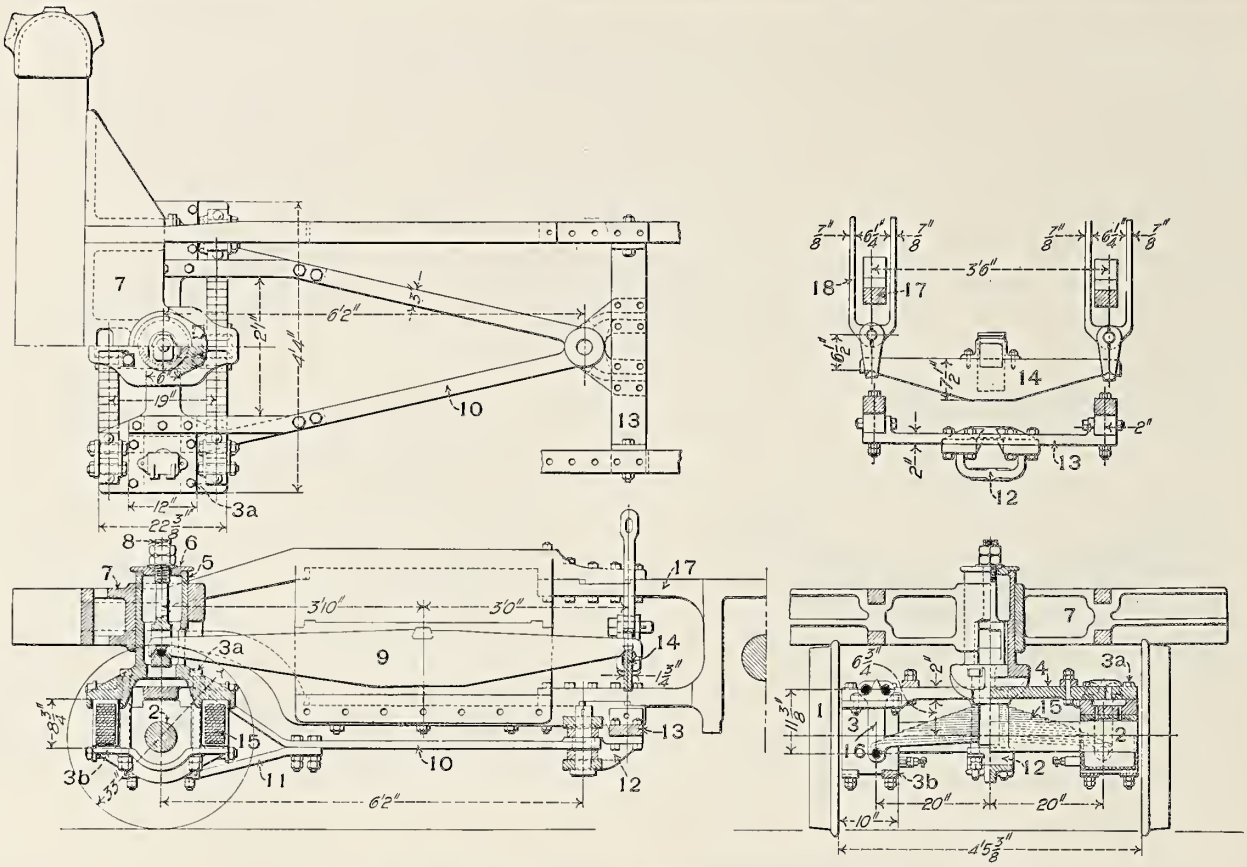

Fig. 979—Pony Truck for Mogul (2-6-0) Locomotive.

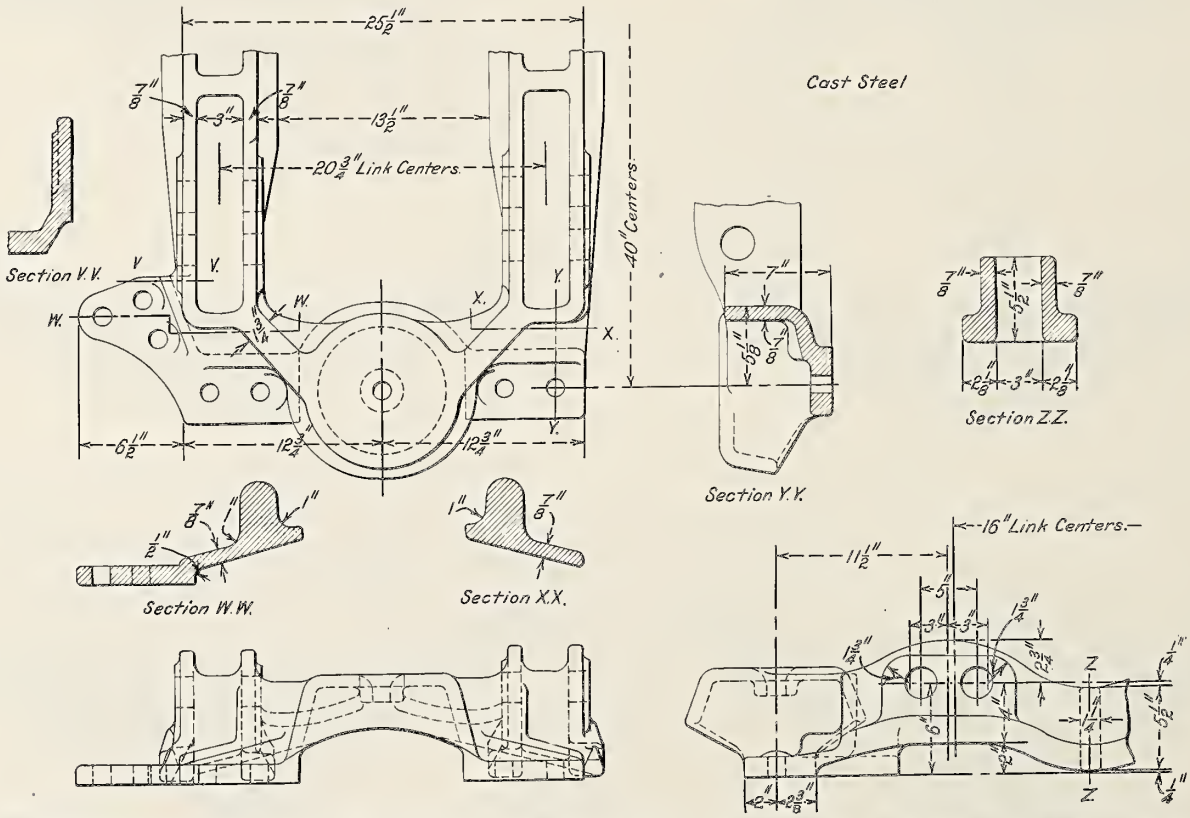

Fig. 980—Swing Frame for Pony Truck on Mikado (2-8-2) Locomotive. Built for the Chesapeake & Ohio by the American Locomotive Company.

Numbers Refer to Names of Parts on Page 461.

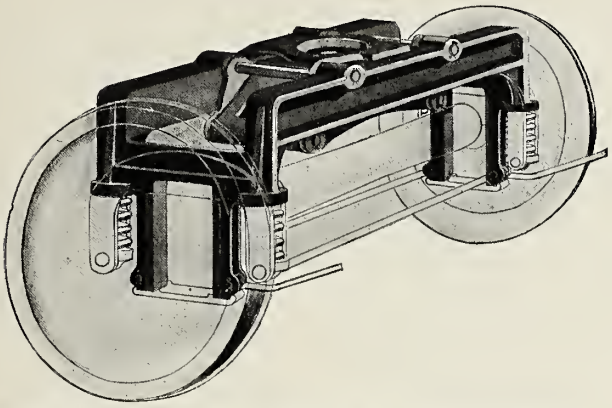

Fig. 981—Adams Easy Riding Pony Truck; Commonwealth Steel Company.

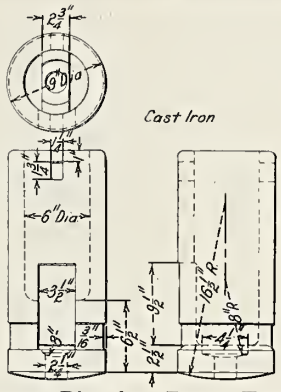

Fig. 982—Center Pin for Pony Truck Shown in Fig. 978.

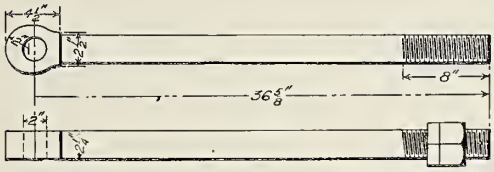

Fig. 983—Center Pin Bolt of Pony Truck for Consolidation (2-8-0) Locomotive; American Locomotive Company.

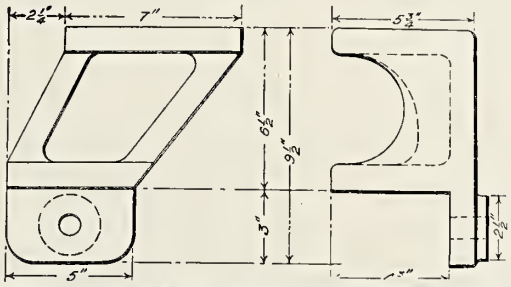

Fig. 984—Spring Link Safety Stop of Pony Truck for Consolidation (2-8-0) Locomotive; American Locomotive Company.

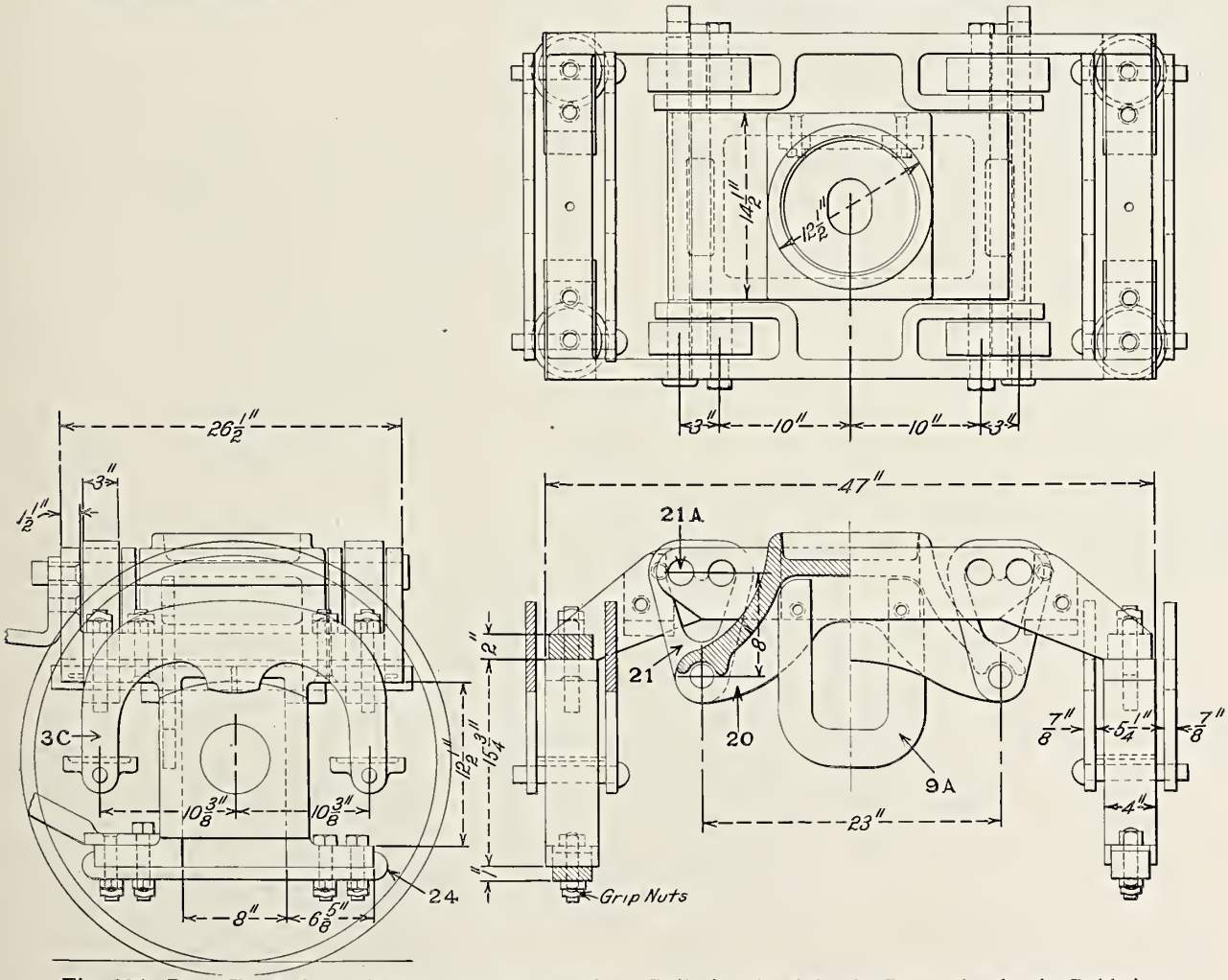

Fig. 985—Pony Truck for Mikado (2-8-2) Locomotive. Built for the Atlantic Coast Line by the Baldwin Locomotive Works.

Numbers Refer to Names of Parts on Page 461.

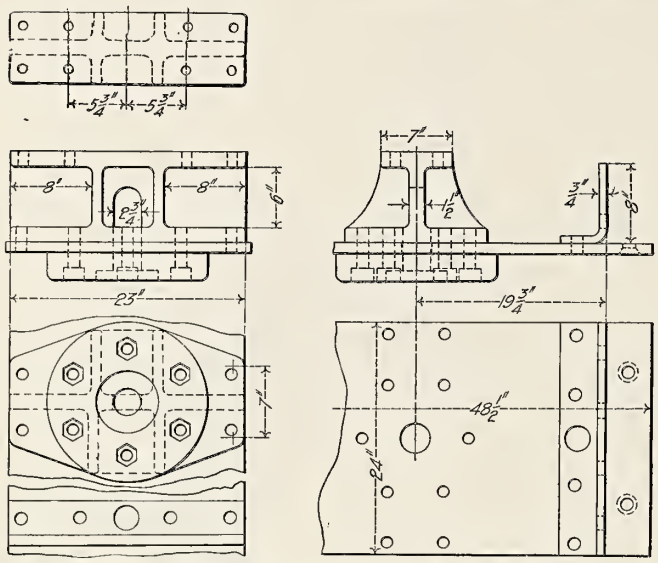

Fig. 986—Center Plate of Pony Truck for Mogul (2-6-0) Locomotive; American Locomotive Company.

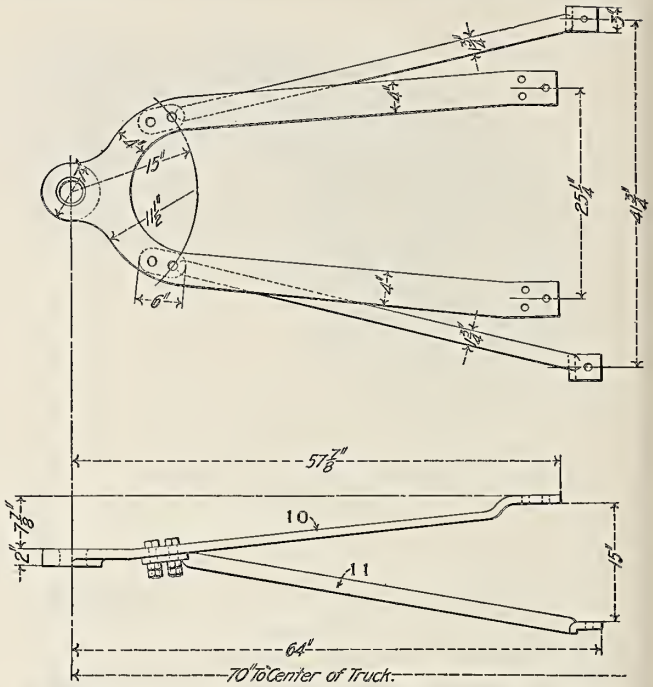

Fig. 987—Pony Truck Radius Bar for Consolidation (2-8-0) Locomotive; American Locomotive Company.

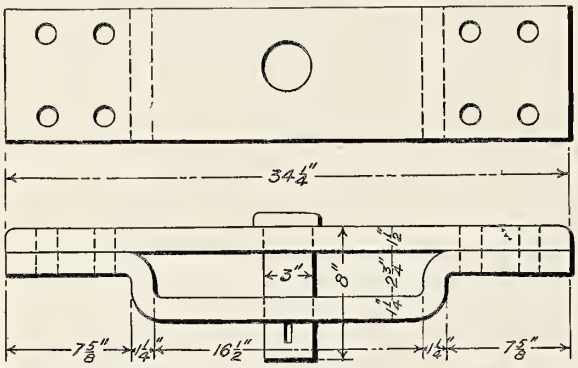

Fig 988—Radius Bar Cross-Tie for Consolidation (2-8-0) Locomotive; American Locomotive Company.

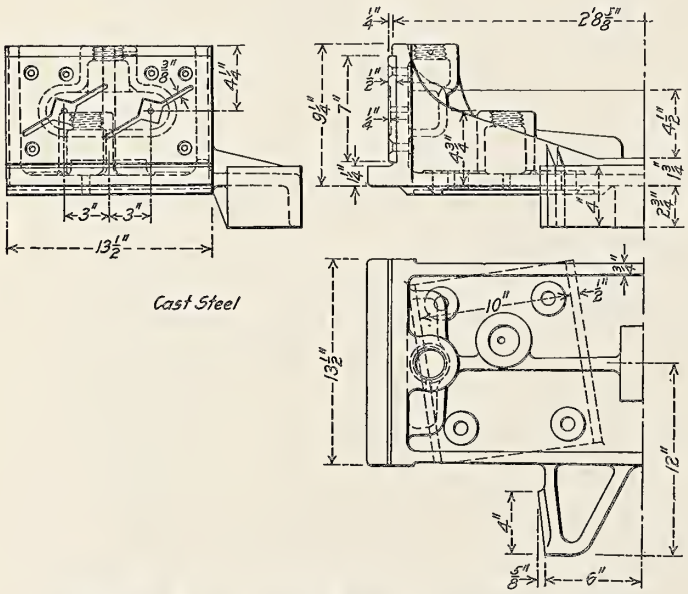

Fig. 989—Pony Truck Bolster Guide for Mikado (2-8-2) Locomotive. Built for the Canadian Pacific by the Montreal Locomotive Works.

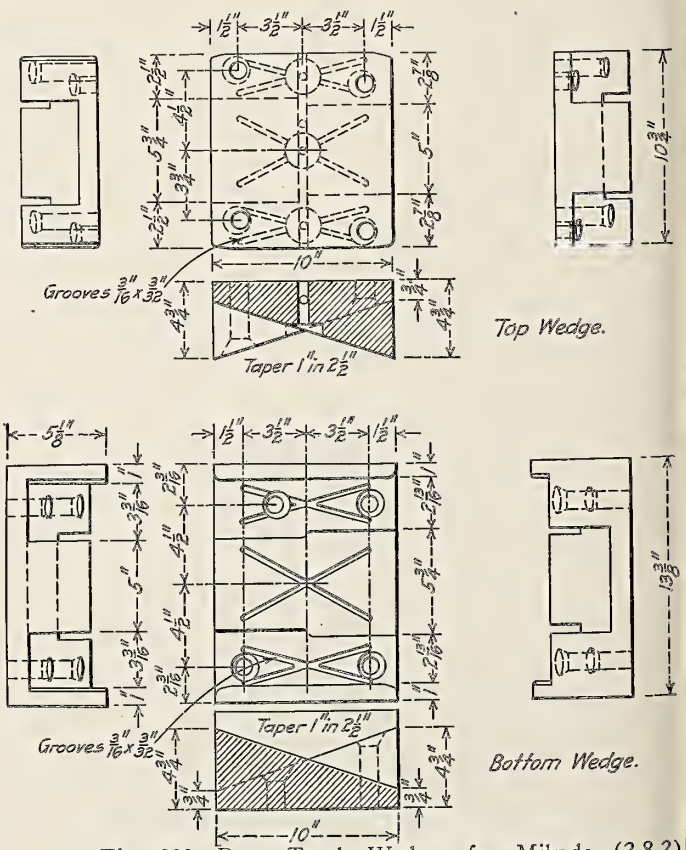

Fig. 990—Pony Truck Wedges for Mikado (2-8-2) Locomotive. Built for the Canadian Pacific by the Montreal Locomotive Works.

Numbers Refer to Names of Parts on Page 461.

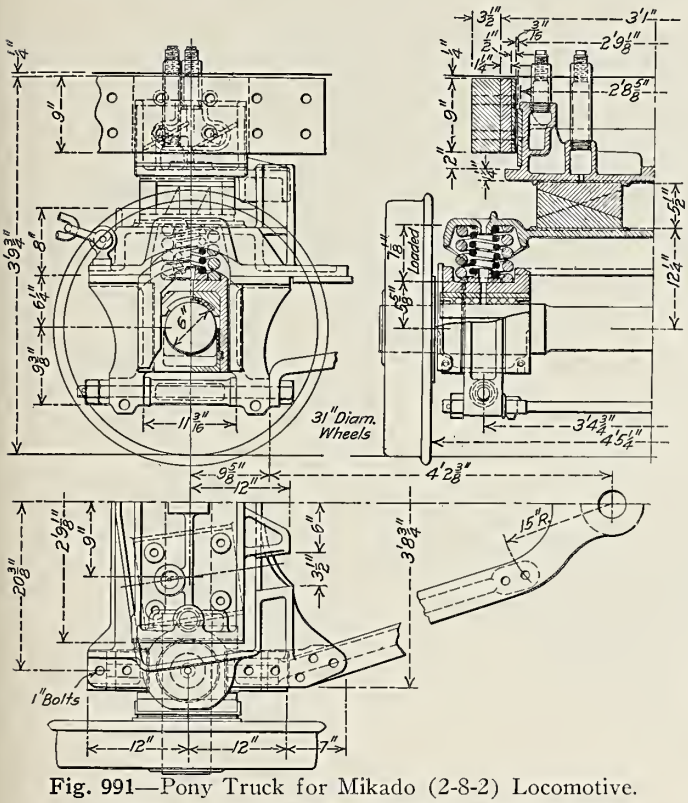

Fig. 991—Pony Truck for Mikado (2-8-2) Locomotive. Built for the Canadian Pacific by the Montreal Locomotive Works.

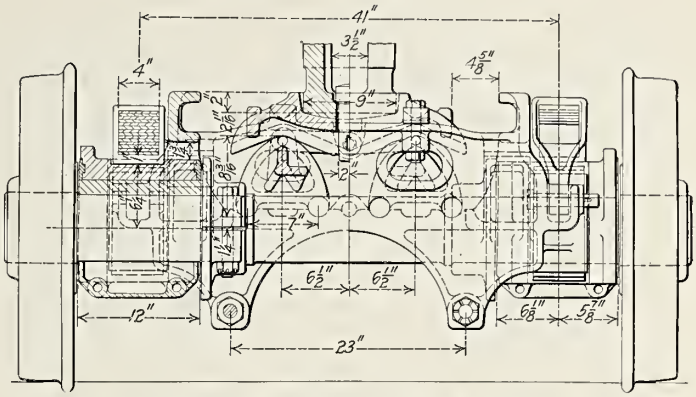

Fig. 992—General Arrangement of Economy Two-Wheel Engine Truck; Economy Devices Corporation.

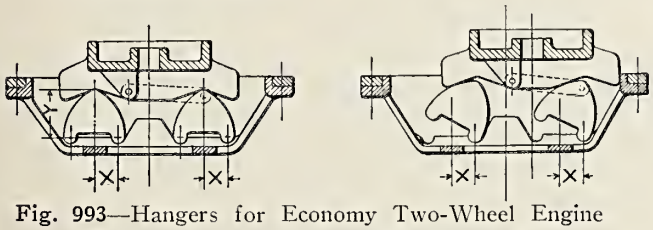

Fig. 993—Hangers for Economy Two-Wheel Engine Truck; Economy Devices Corporation.

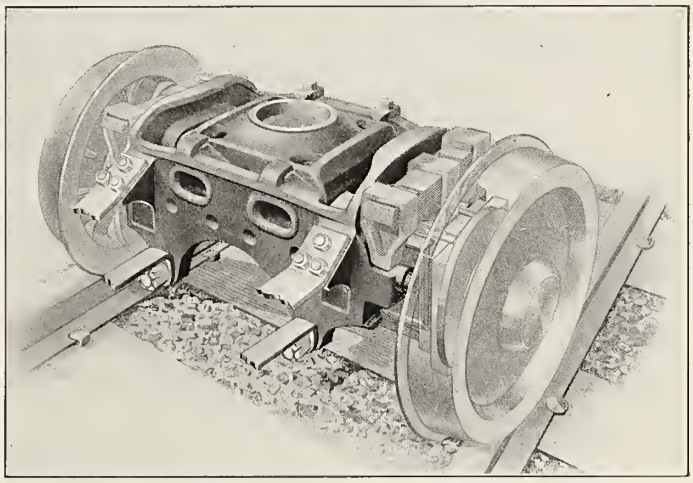

Fig. 994—General View of Economy Two-Wheel Engine Truck; Economy Devices Corporation.

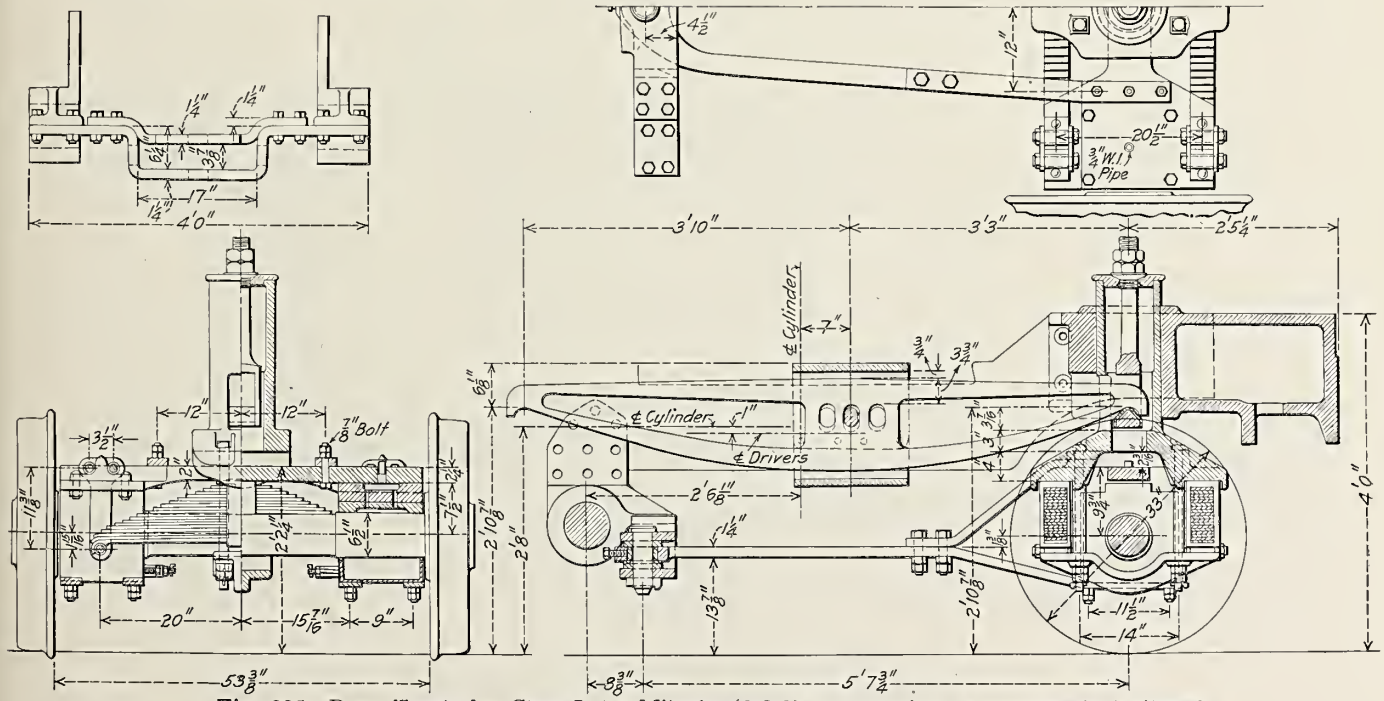

Fig. 995—Pony Truck for Class L-1-s Mikado (2-8-2) Locomotive; Pennsylvania Railroad.

Names of Parts of Four-Wheel Front Engine Trucks, Figs. 997-1000.

1 *Wheel*
2 *Axle*
3 *Side Frame*
4 *End Frame*
5 *Journal Box*
6 *Equalizer*
7 *Pedestal*
8 *Pedestal Tie Bar*
8a *Pedestal Tie Bar Cross Tie*
8b *Pedestal Cross Brace*
9 *Pedestal Bolt*
10 *Semi-Elliptic Truck Spring*
11 *Spring Hanger*
12 *Spring Hanger Pin*
13 *Transom*
13a *Transom Bolt*
14 *Center Plate or Swing Bolster*
15 *Center Plate Hanger*
15a *Swing Link*
16 *Swing Link Pin*
17 *Safety Beam*
18 *Brake Cylinder*
18a *Brake Cylinder Bracket*
19 *Brake Lever*
20 *Brake Lever Fulcrum*
21 *Brake Equalizer*
22 *Brake Rod*
23 *Floating Brake Lever*
24 *Floating Brake Lever Connection*
25 *Brake Hanger*
25a *Brake Hanger Bracket*
26 *Brake Shoe*
27 *Brake Head*
28 *Brake Head Adjusting Spring*
29 *Brake Head Adjusting Spring Rod*
30 *Check Chain Eye*

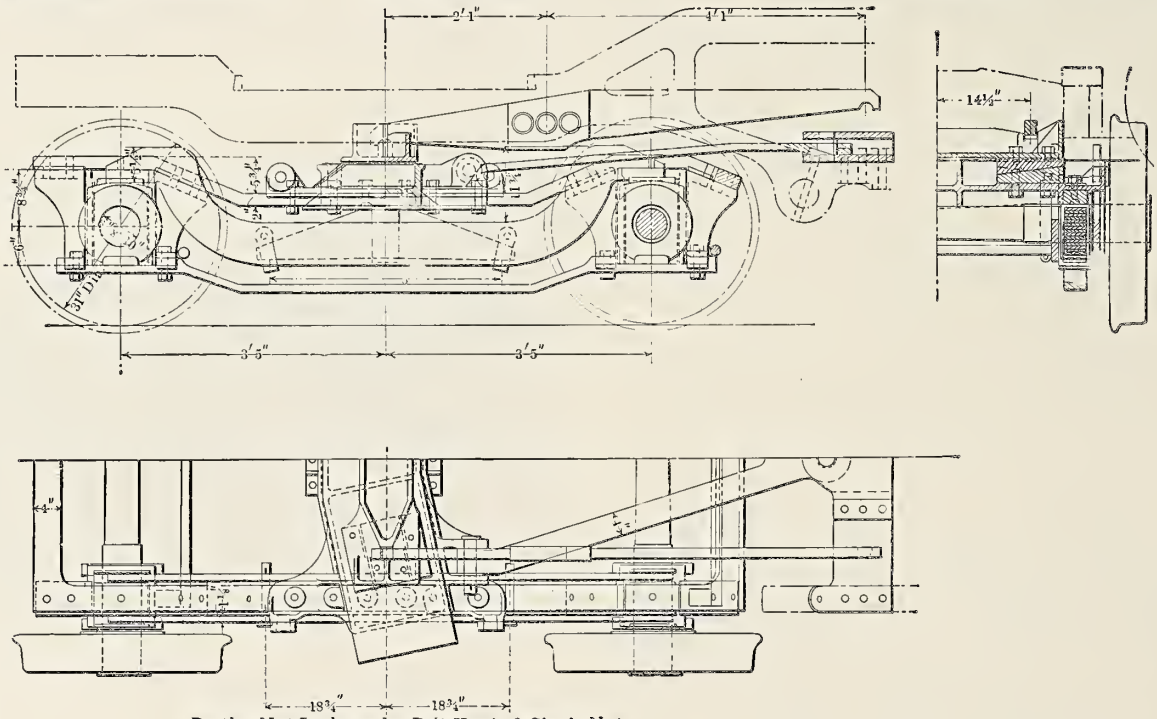

Bartley Nut Locks under Bolt Heads & Single Nuts

Fig. 996—Four-Wheel Front Truck for Six-Coupled (4-6-4) Suburban Passenger Locomotive; Canadian Pacific.

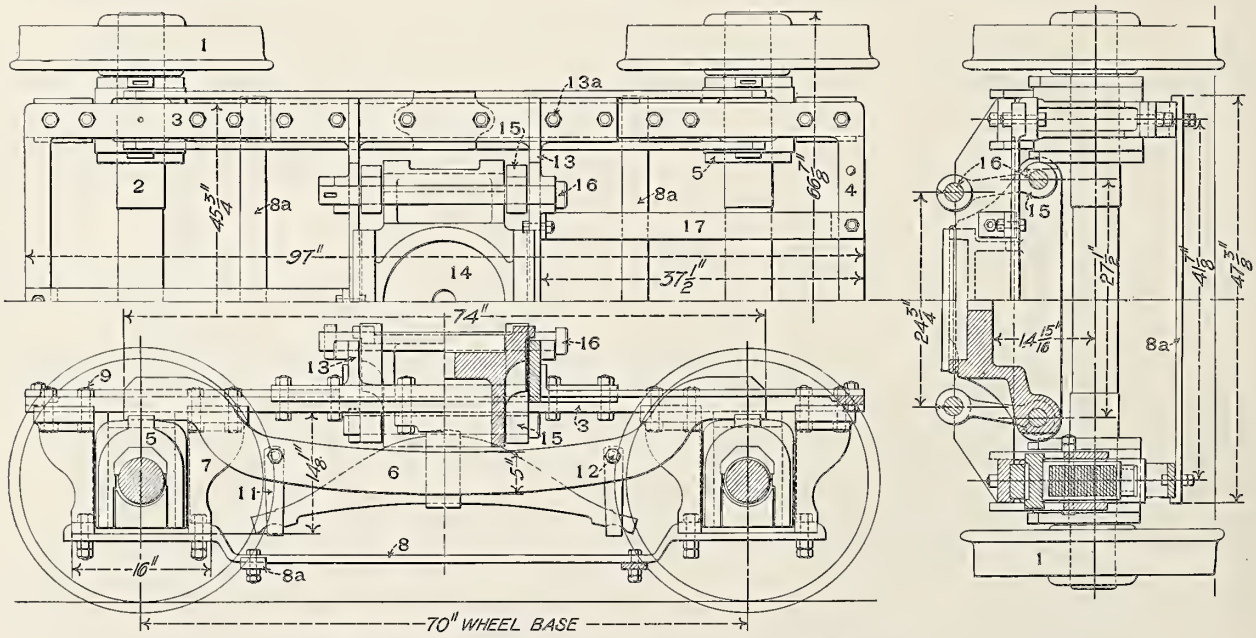

Fig. 997—Four-Wheel Front Truck; Boston & Maine.

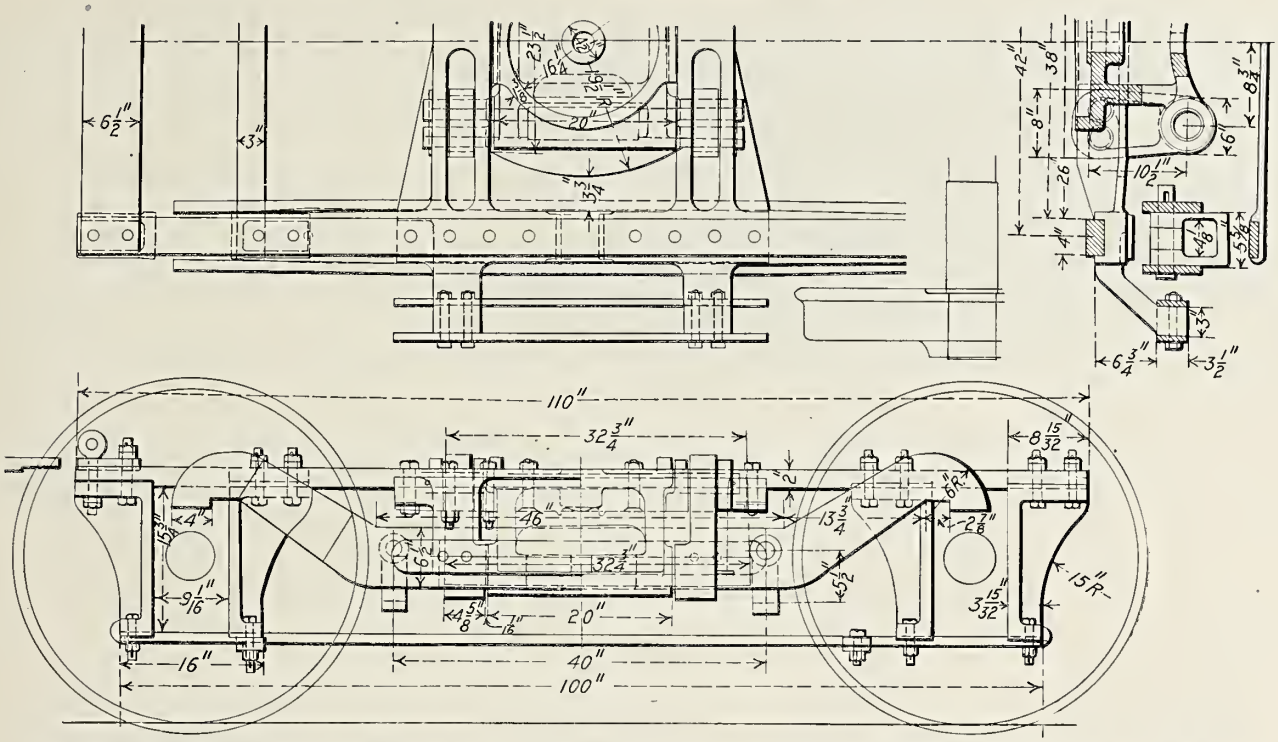

Fig. 998—Four-Wheel Front Truck for Pacific Type (4-6-2) Locomotive. Built for the Nashville, Chattanooga & St. Louis by the Baldwin Locomotive Works.

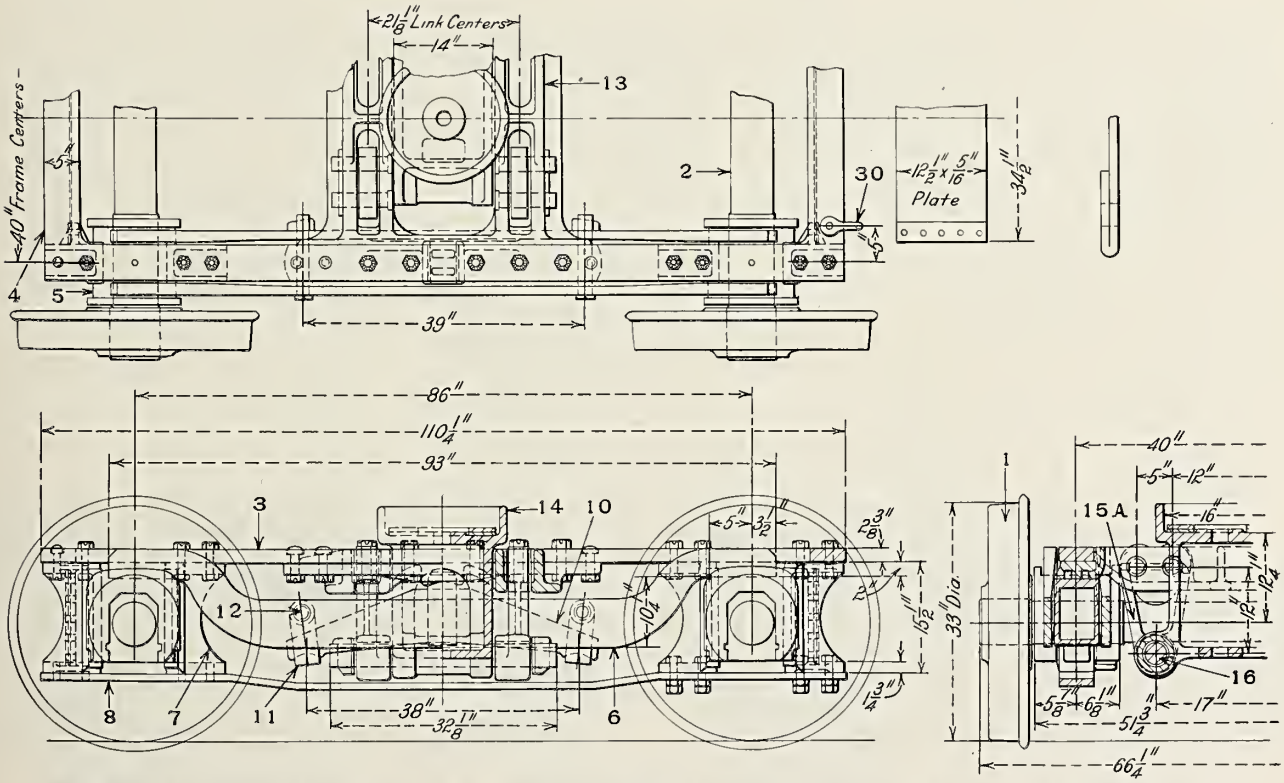

Fig. 999—Four-Wheel Front Truck for Mountain Type (4-8-2) Locomotive. Built for the Chesapeake & Ohio by the American Locomotive Company.

Numbers Refer to Names of Parts on Page 466.

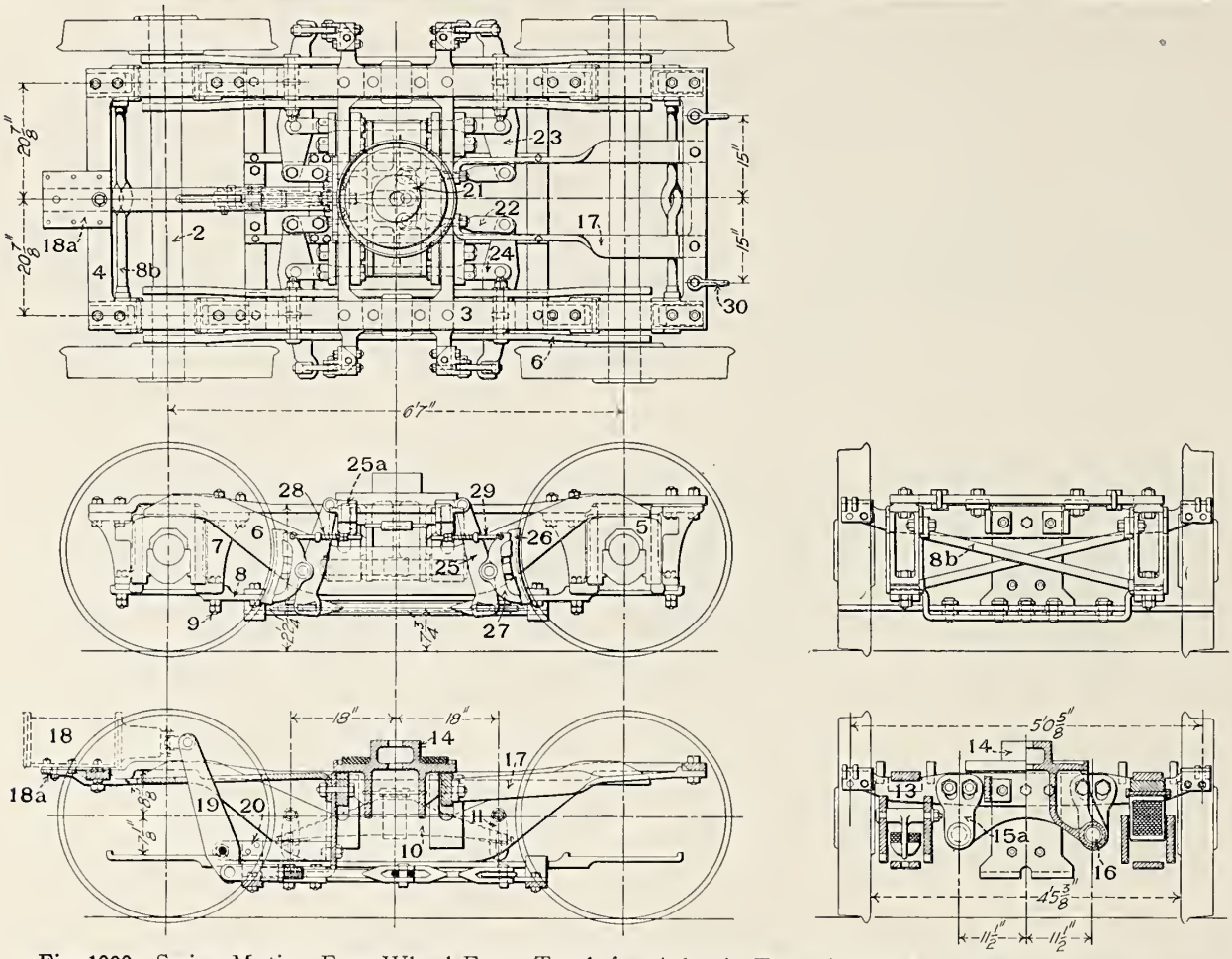

Fig. 1000—Swing Motion Four-Wheel Front Truck for Atlantic Type (4-4-2) Locomotive; Pennsylvania Railroad.

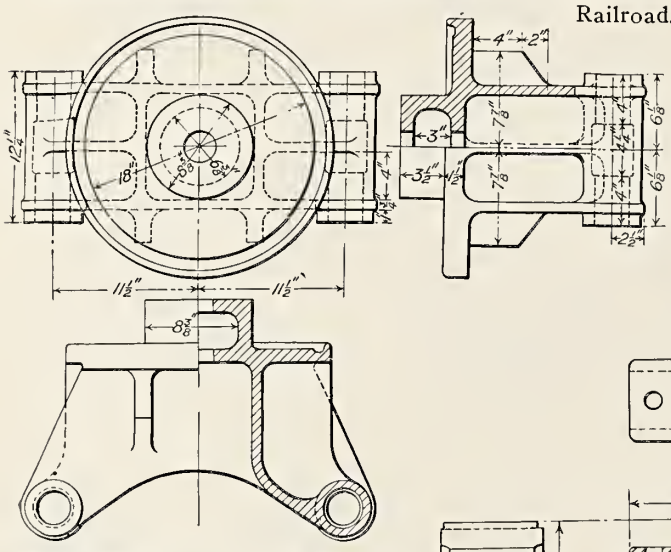

Fig. 1001—Truck Center Plate. Casting or Swing Bolster.

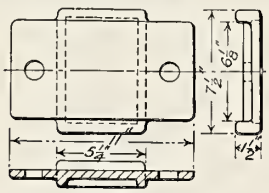

Fig. 1002—Truck Spring Seat.

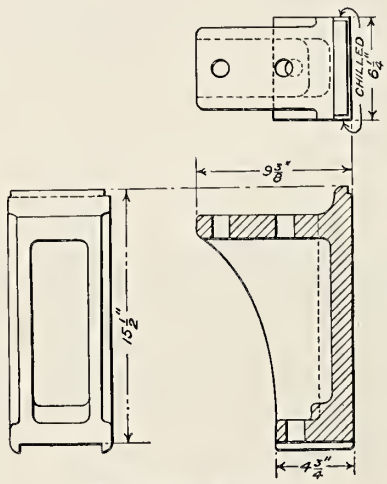

Fig. 1003—Pedestal.

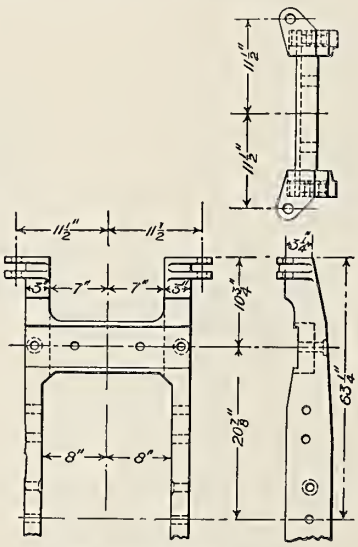

Fig. 1004—Transom.

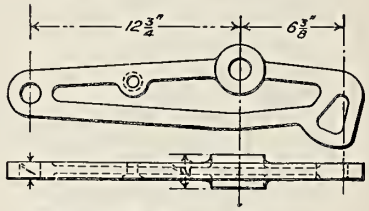

Fig. 1005—Brake Hanger.

Figs. 1001-1005 are Details of Swing Motion Four-Wheel Front Truck for Atlantic Type (4-4-2) Locomotive; Pennsylvania Railroad.

Numbers Refer to Names of Parts on Page 466.

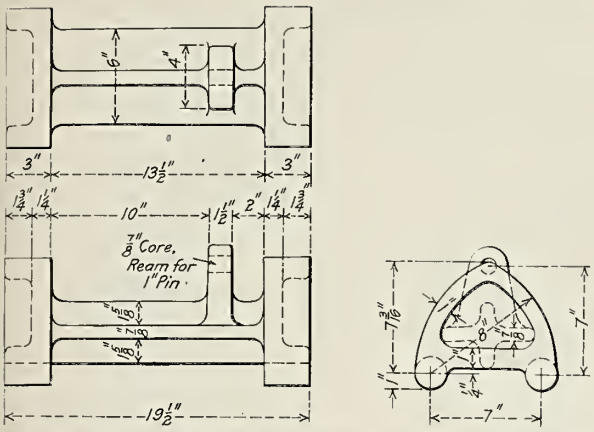

Fig. 1006—Rocker for Economy Four-Wheel Engine Truck; Economy Devices Corporation.

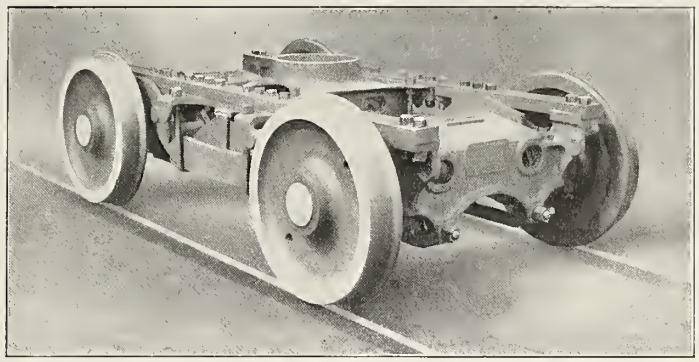

Fig. 1007—General View of Economy Four-Wheel Engine Truck; Economy Devices Corporation.

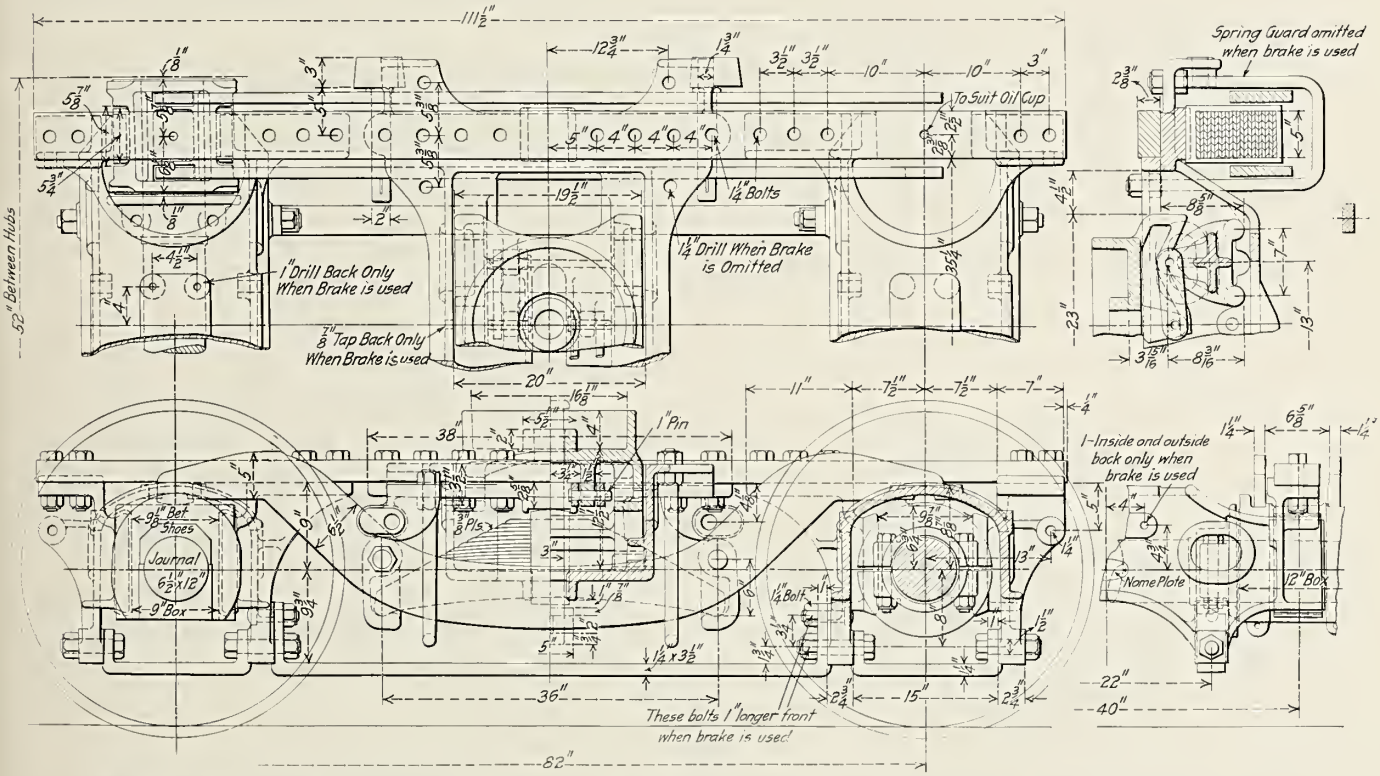

Fig. 1008—General Arrangement of Economy Four-Wheel Engine Truck; Economy Devices Corporation.

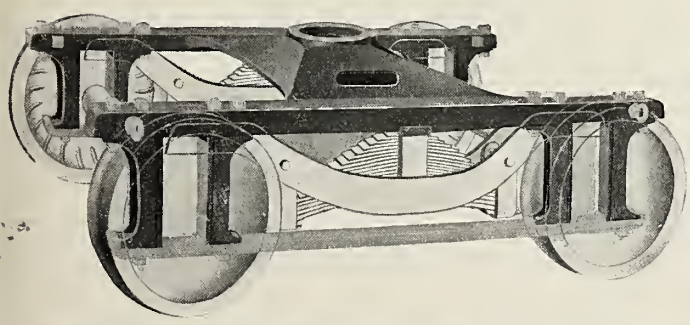

Fig. 1009—Adams Easy Riding Rigid Four-Wheel Front Truck; Commonwealth Steel Company.

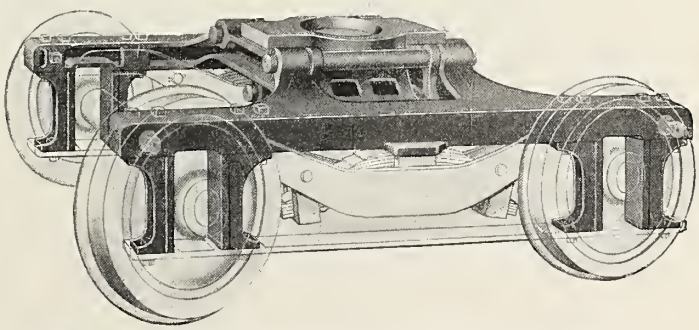

Fig. 1010—Adams Easy Riding Swing Motion Four-Wheel Truck: Commonwealth Steel Company.

Names of Parts of Radial Trailing Trucks, Figs. 1014-1020.

1 *Wheel*
2 *Axle*
3 *Combined Journal Box*
8 *Radius Bar*
13 *Frame*
14 *Spring*
17 *Pedestal*
21 *Centering or Adjusting Spring Case*
22 *Adjusting Spring Seat*
23 *Adjusting Spring Rod*
24 *Adjusting Spring Rod Bearing*
25 *Journal Box*
26 *Spring Yoke*
27 *Truck Spring Seat*

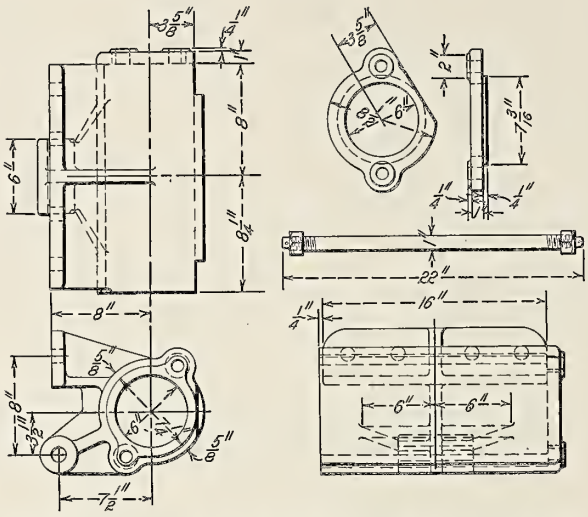

Fig. 1011—Trailing Truck Adjusting Spring Case.

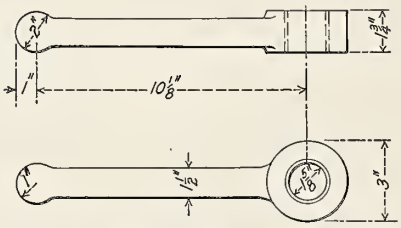

Fig. 1012—Trailing Truck Adjusting Spring Rod.

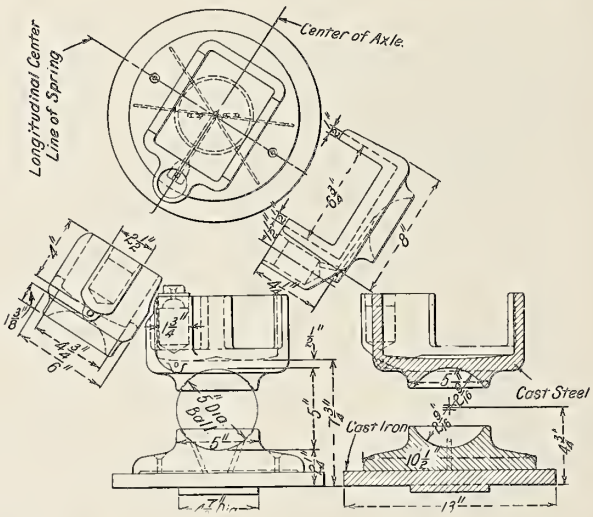

Fig. 1013—Trailing Truck Spring Seat for Mikado (2-8-2) Locomotive. Built for the Missouri Pacific by the American Locomotive Company.

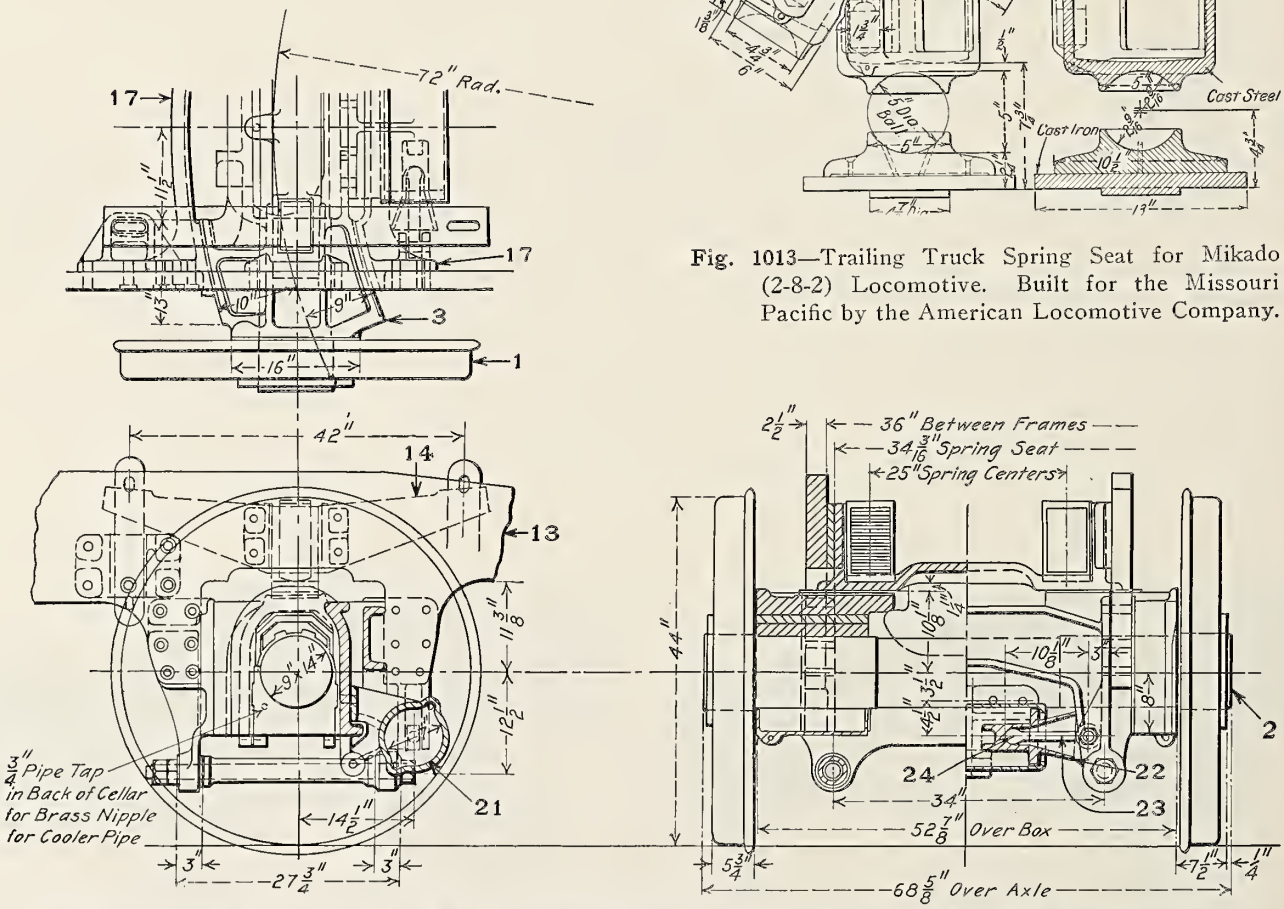

Fig. 1014—Radial Trailing Truck for Mountain Type (4-8-2) Locomotive. Built for the Chesapeake & Ohio by the American Locomotive Company.

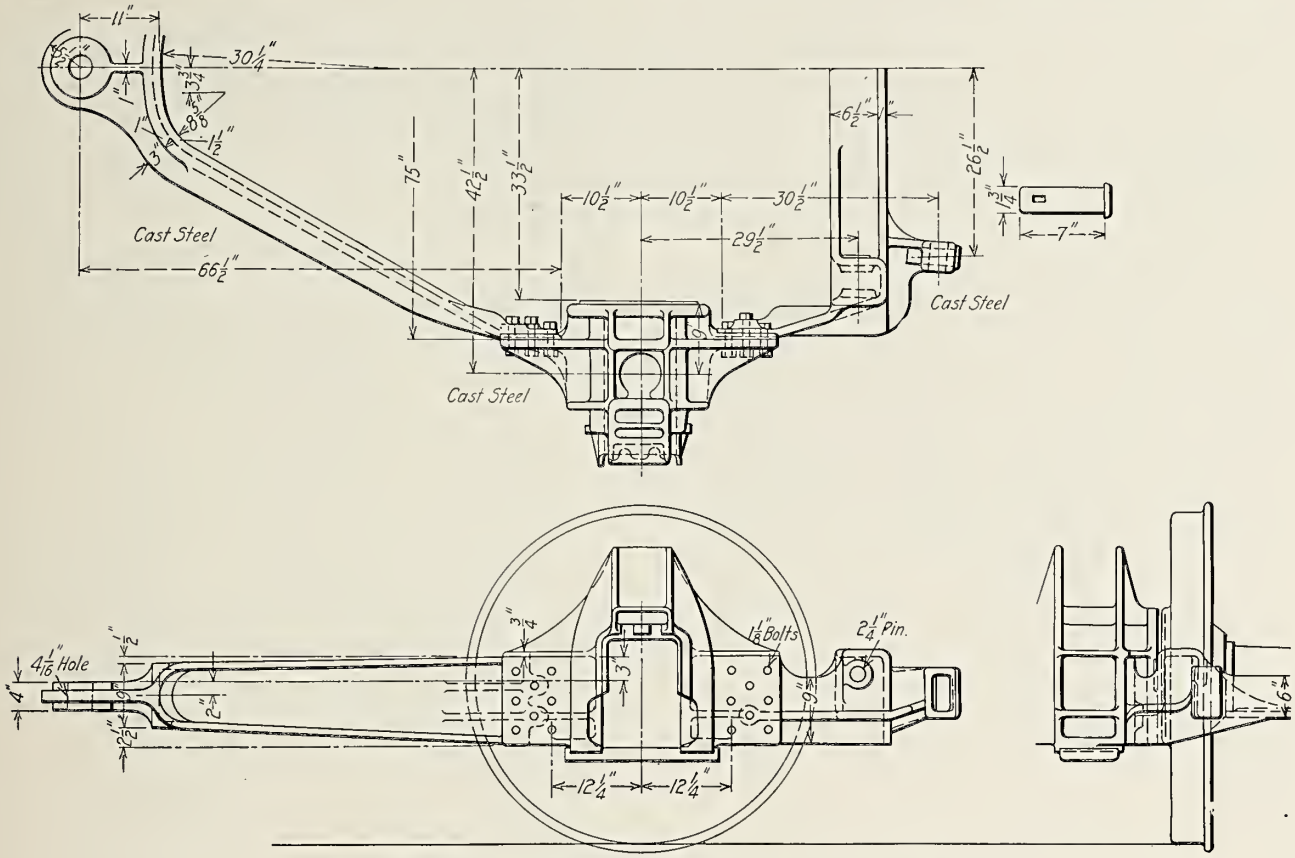

Fig. 1015—Hodges Trailing Truck; Baldwin Locomotive Works.

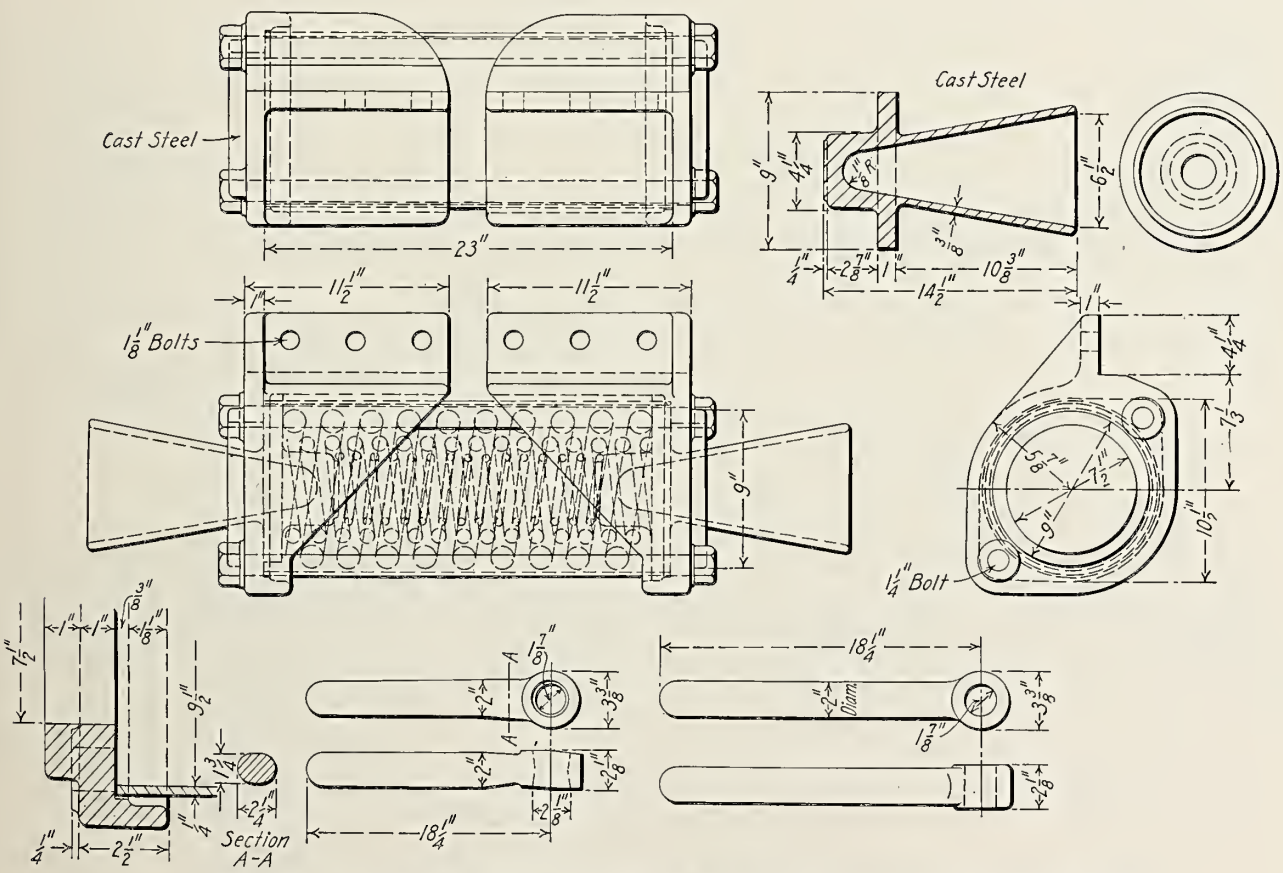

Fig. 1016—Centering Device for Hodges Trailing Truck; Baldwin Locomotive Works.

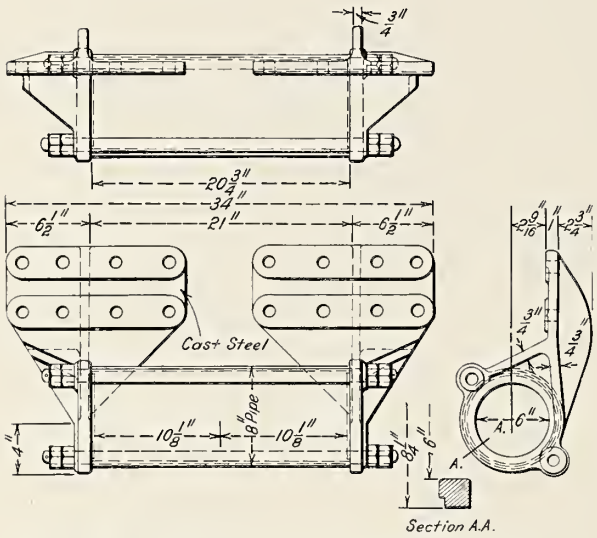

Fig. 1017—Trailing Truck Adjusting Spring Case.

Figs. 1017-1019 are Details of Radial Trailing Truck for Mikado (2-8-2) Locomotive. Built for the Missouri Pacific by the American Locomotive Company.

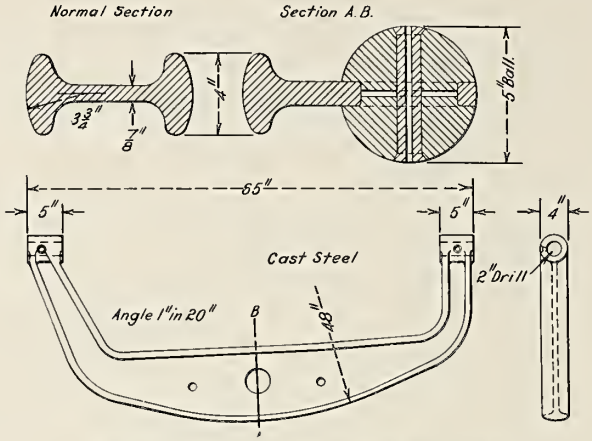

Fig. 1018—Trailing Truck Spring Yoke.

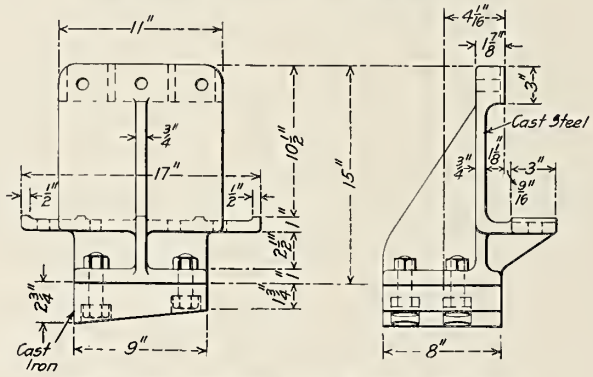

Fig. 1019—Trailing Truck Side Bearing.

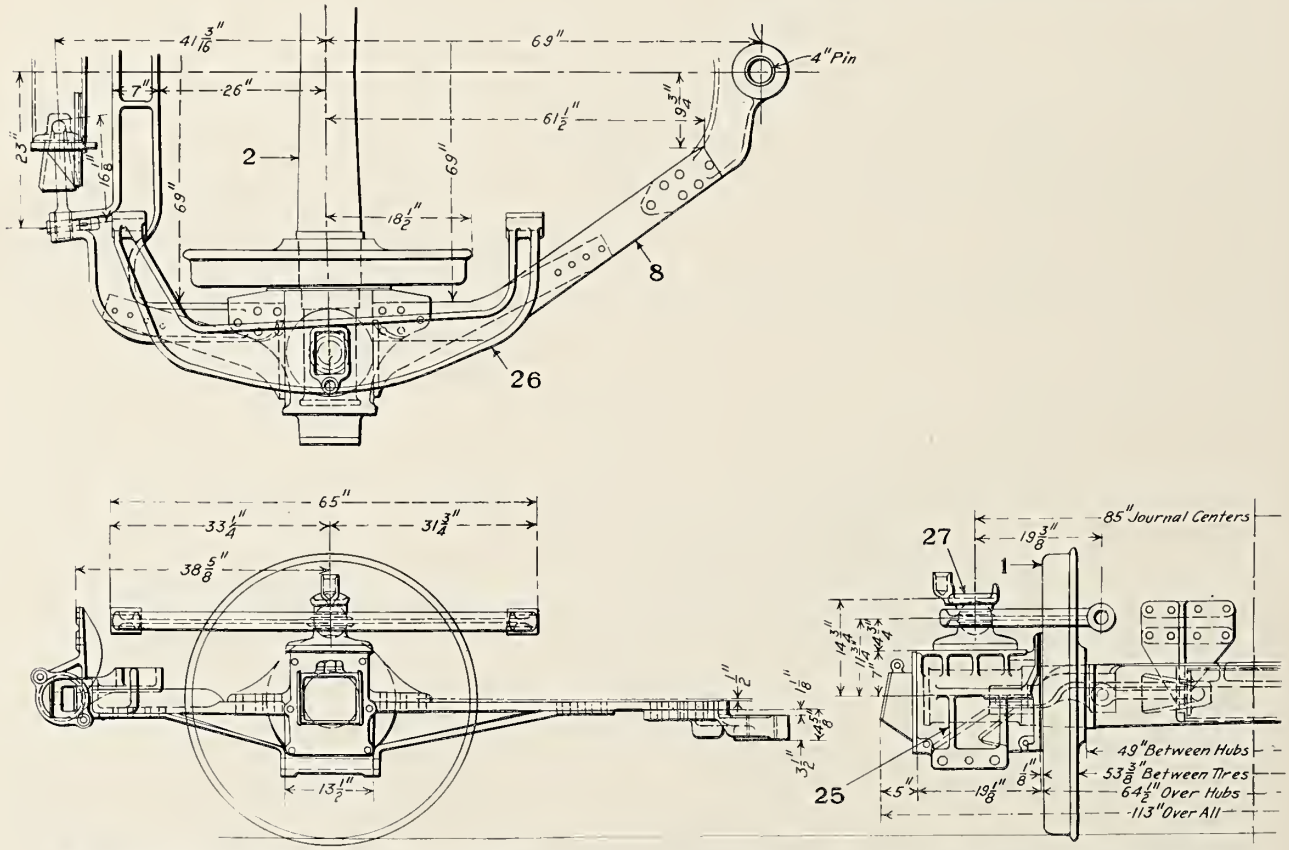

Fig. 1020—Radial Trailing Truck for Mikado (2-8-2) Locomotive. Built for the Missouri Pacific by the American Locomotive Company.

(*See Figs.* 1013 *and* 1017-1019 *for details.*)

Numbers Refer to Names of Parts on Page 470.

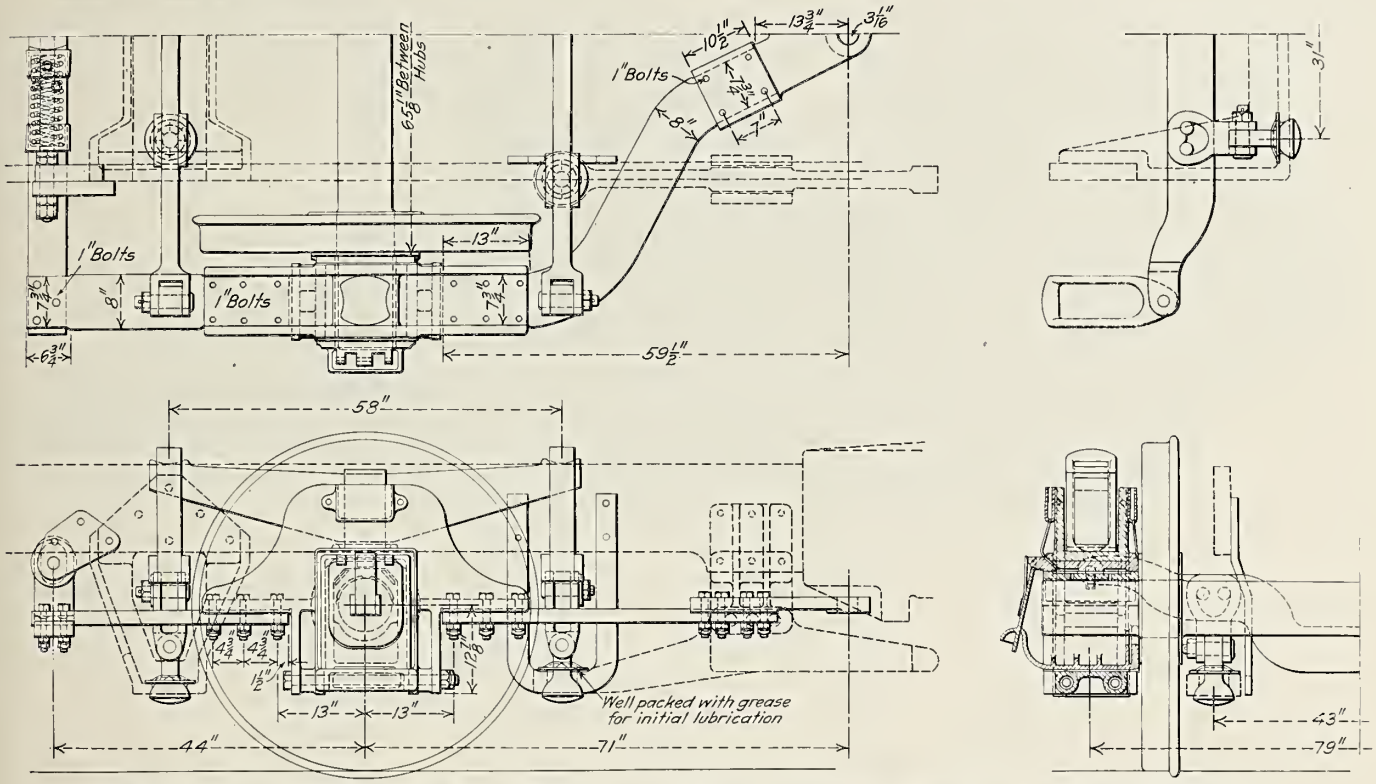

Fig. 1021—Austin Trailing Truck for Pacific Type (4-6-2) Locomotive. Built for the Great Northern by The Lima Locomotive Corporation.

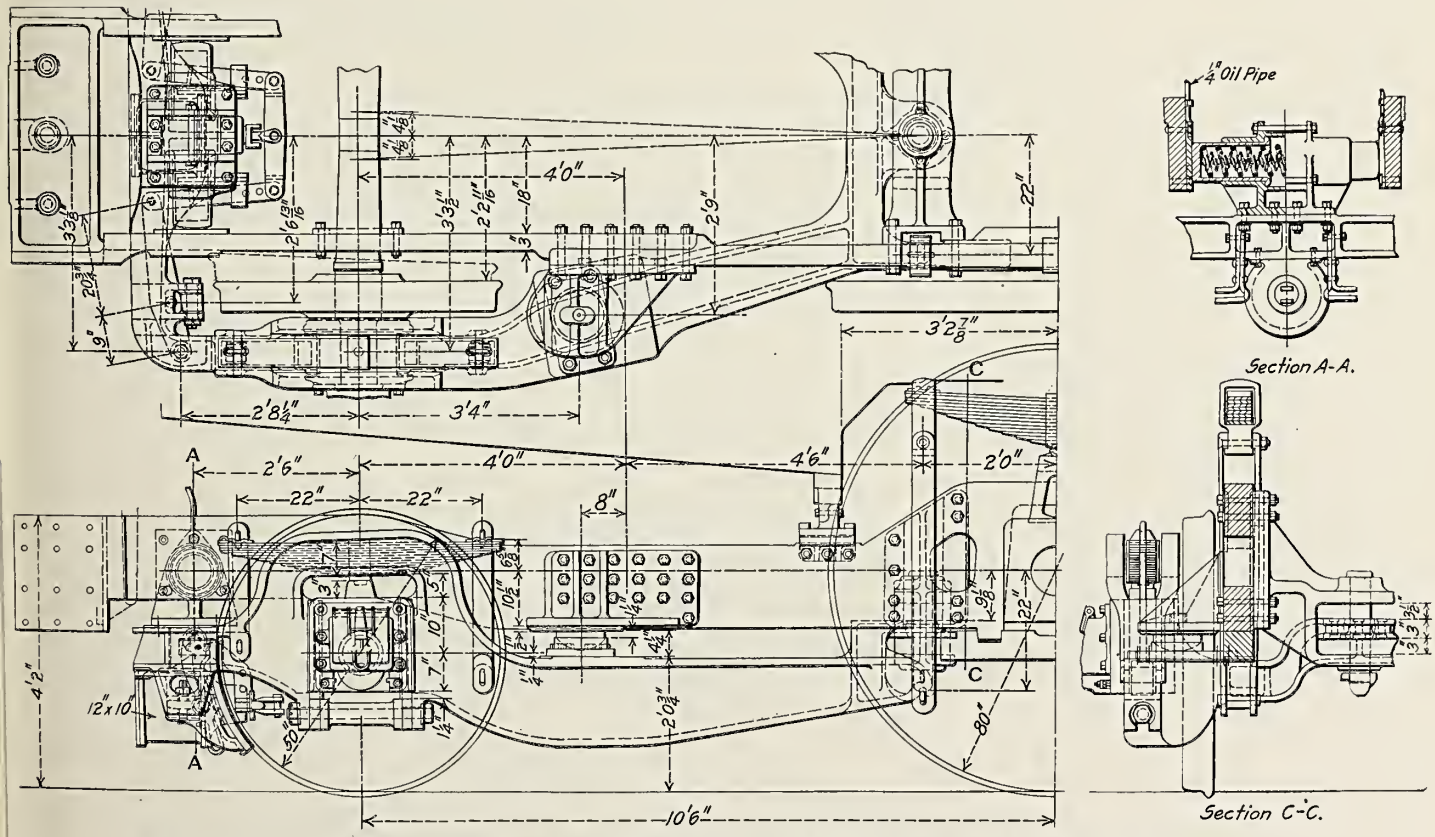

Fig. 1022—Trailing Truck for Class E-6-s Atlantic Type (4-4-2) Locomotive; Pennsylvania Railroad.

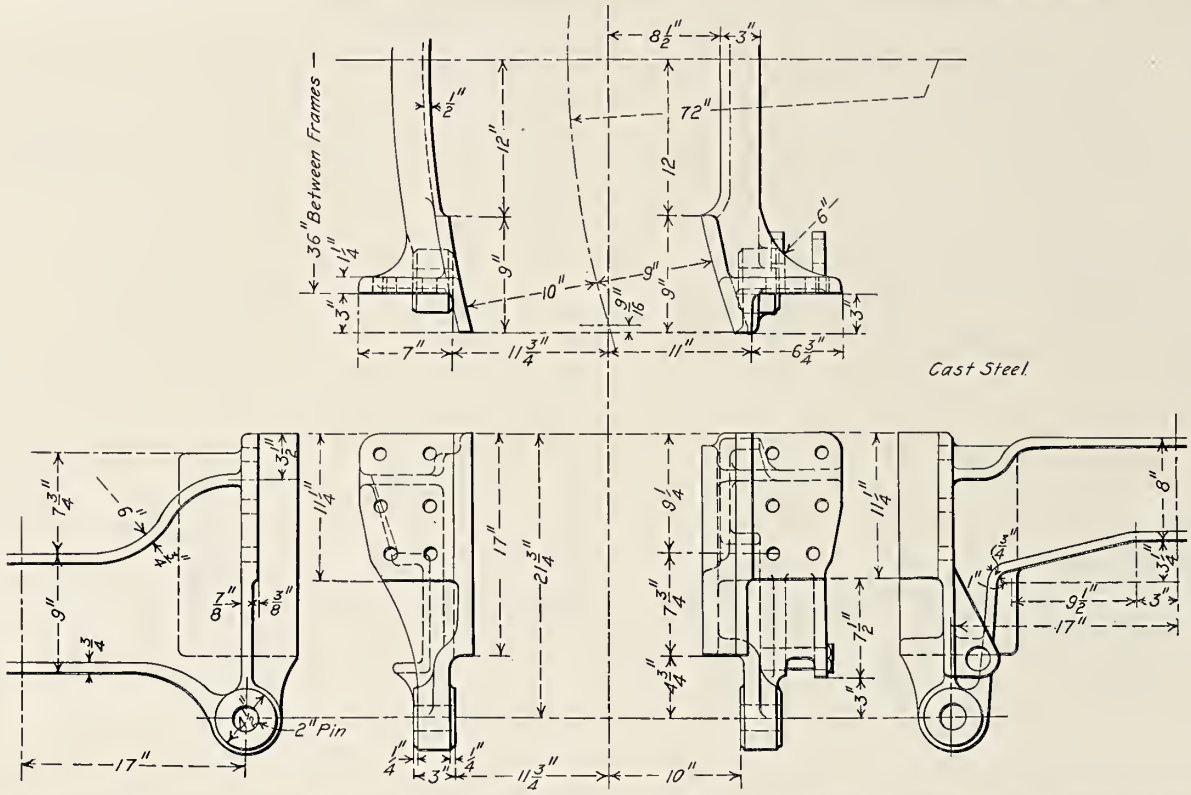

Fig. 1023—Trailing Truck Pedestals for Mountain Type (4-8-2) Locomotive. Built for the Chesapeake & Ohio by the American Locomotive Company.

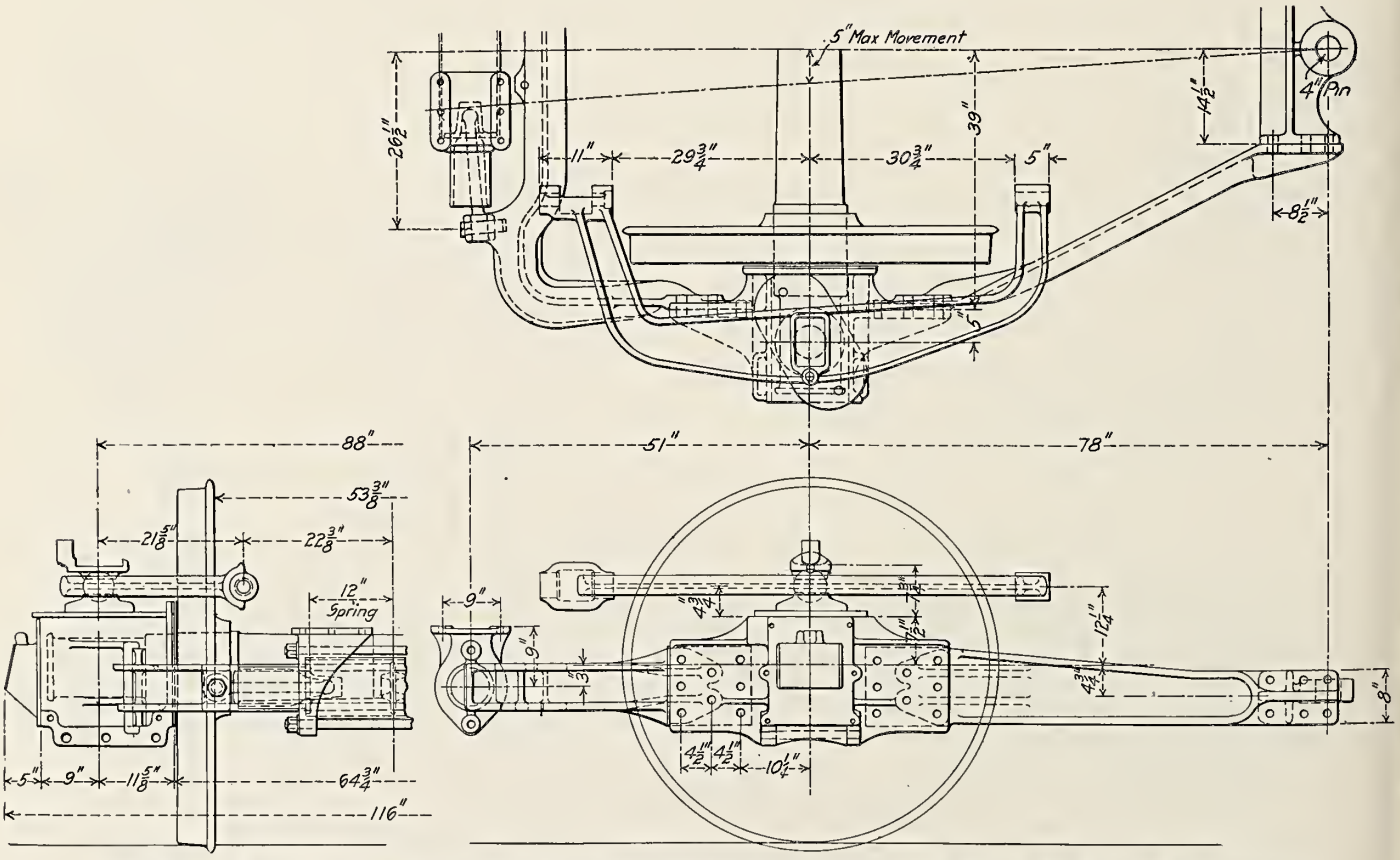

Fig. 1024—Radial Trailing Truck for Pacific Type (4-6-2) Locomotive No. 50,000. Built for Experimental Purposes by the American Locomotive Company.

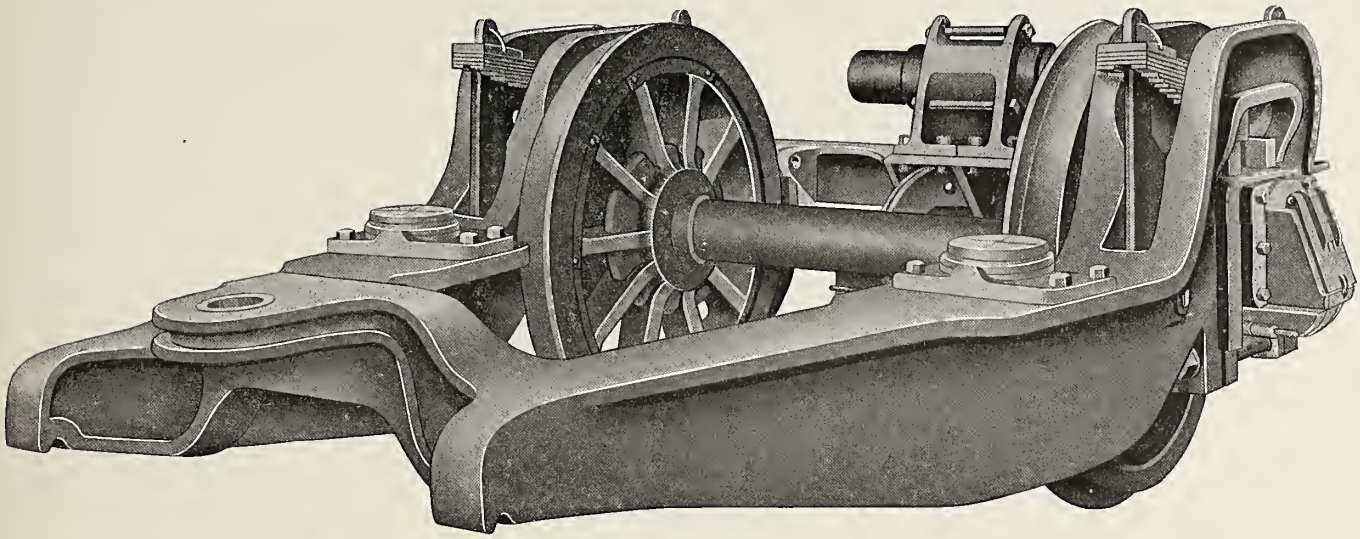

Fig. 1025—K W Trailing Truck; Commonwealth Steel Company.

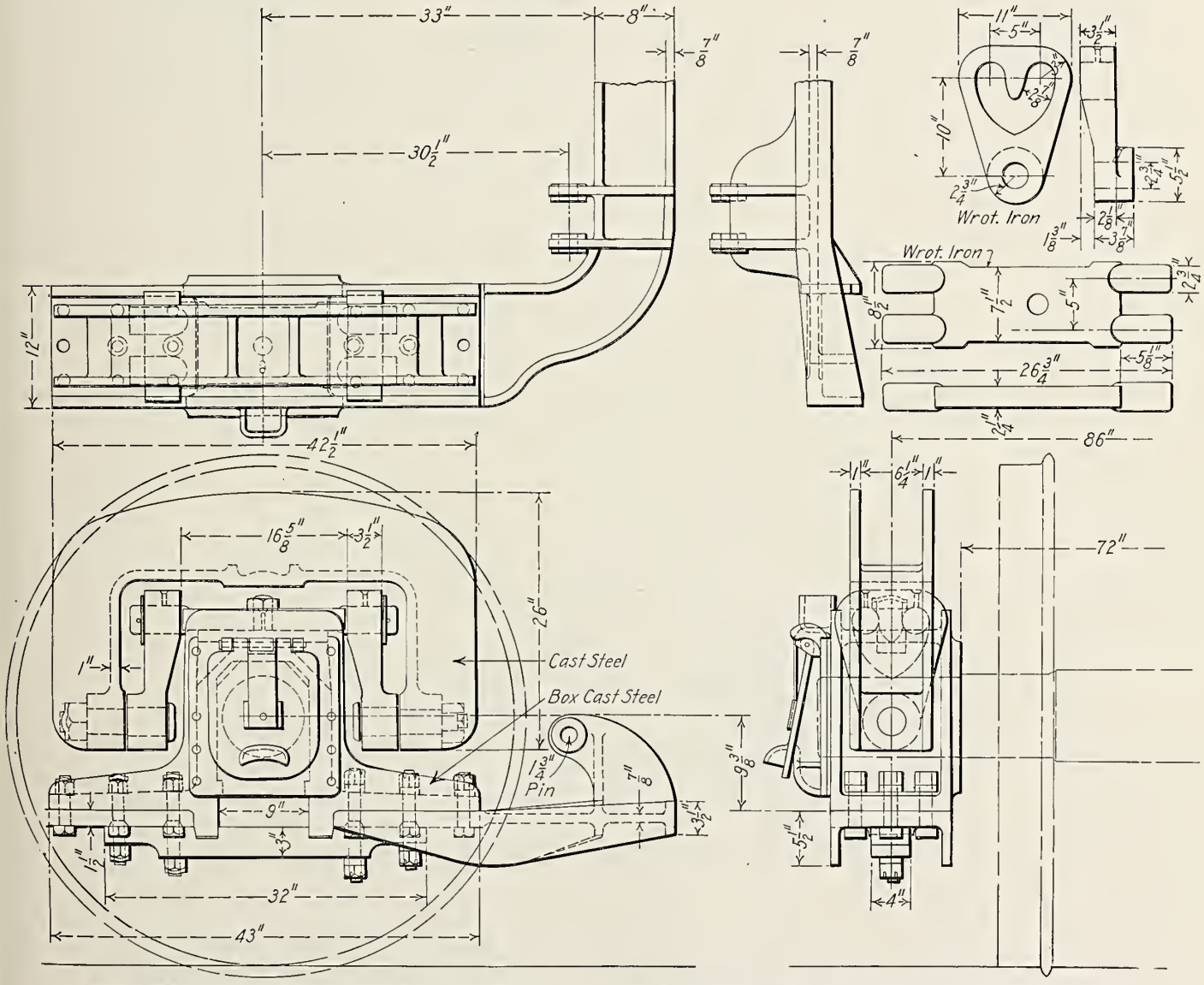

Fig. 1026—Rushton Trailing Truck for Pacific Type (4-6-2) Locomotive. Built for the Atchison, Topeka & Santa Fe by the Baldwin Locomotive Works.

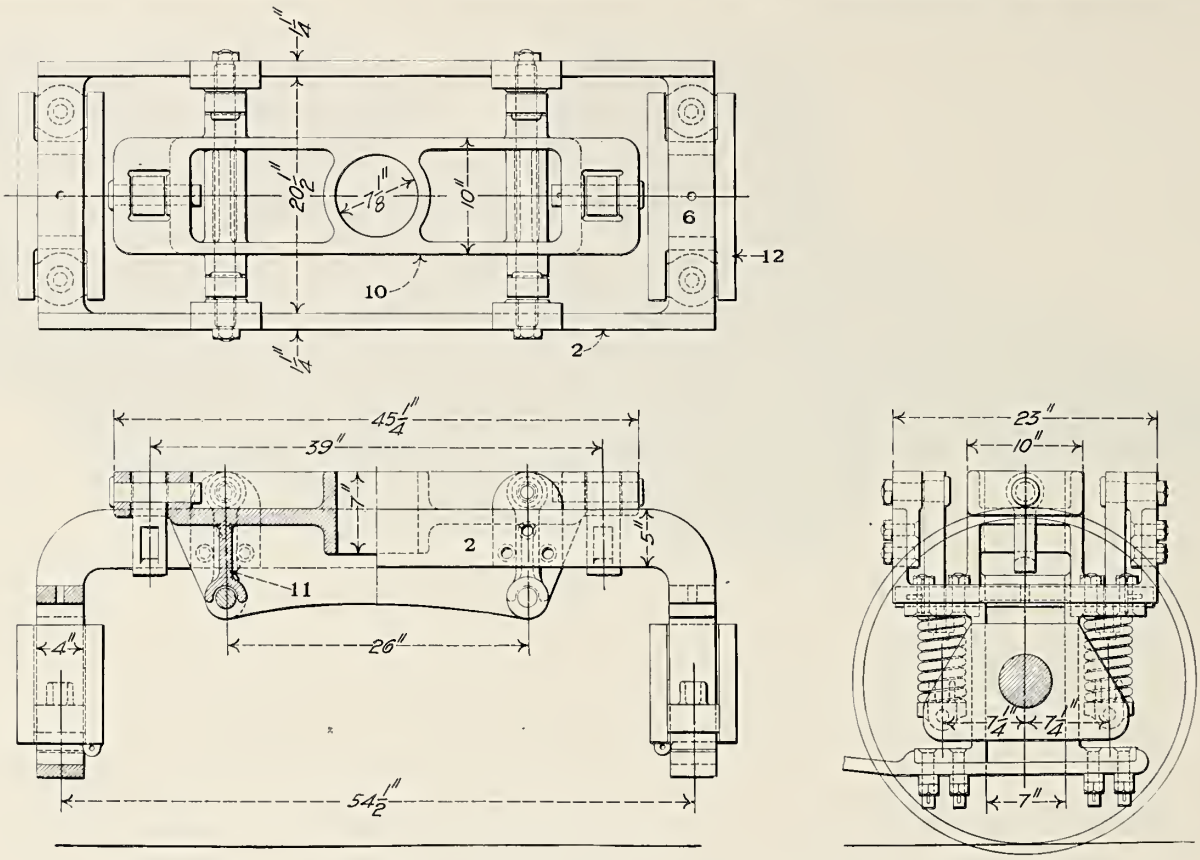

Fig. 1027—Rear Truck for Six-Coupled (0-6-2) Locomotive; Baldwin Locomotive Works.

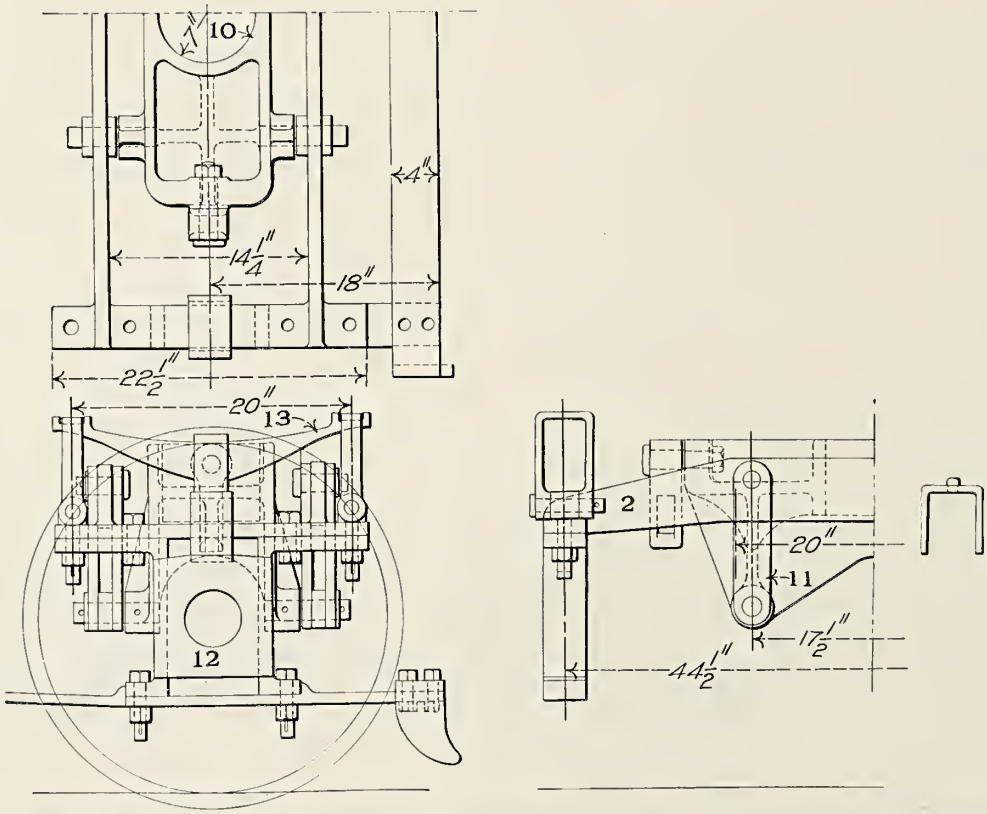

Fig. 1028—Rear Truck for Four-Coupled (2-4-2) Locomotive; Baldwin Locomotive Works.

Numbers Refer to Names of Parts on Page 480.

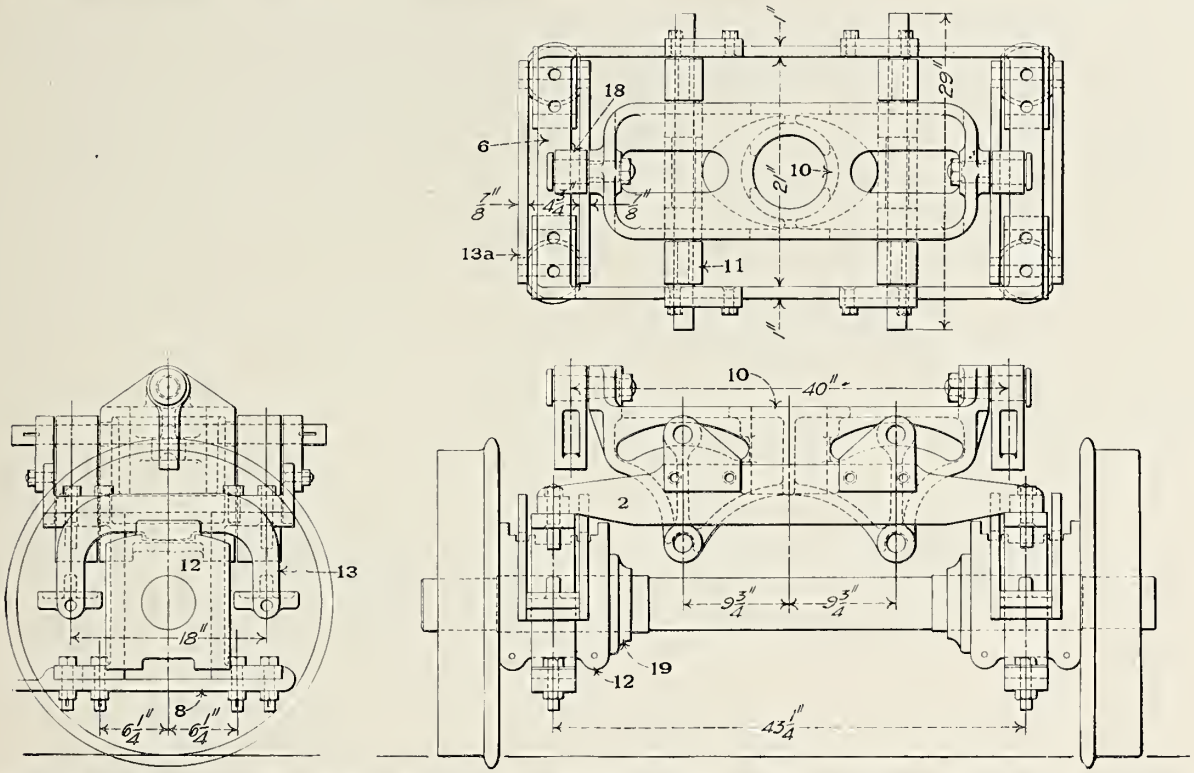

Fig. 1029—Rear Truck with Side Bearings for Six-Coupled (2-6-2) Locomotive; Baldwin Locomotive Works.

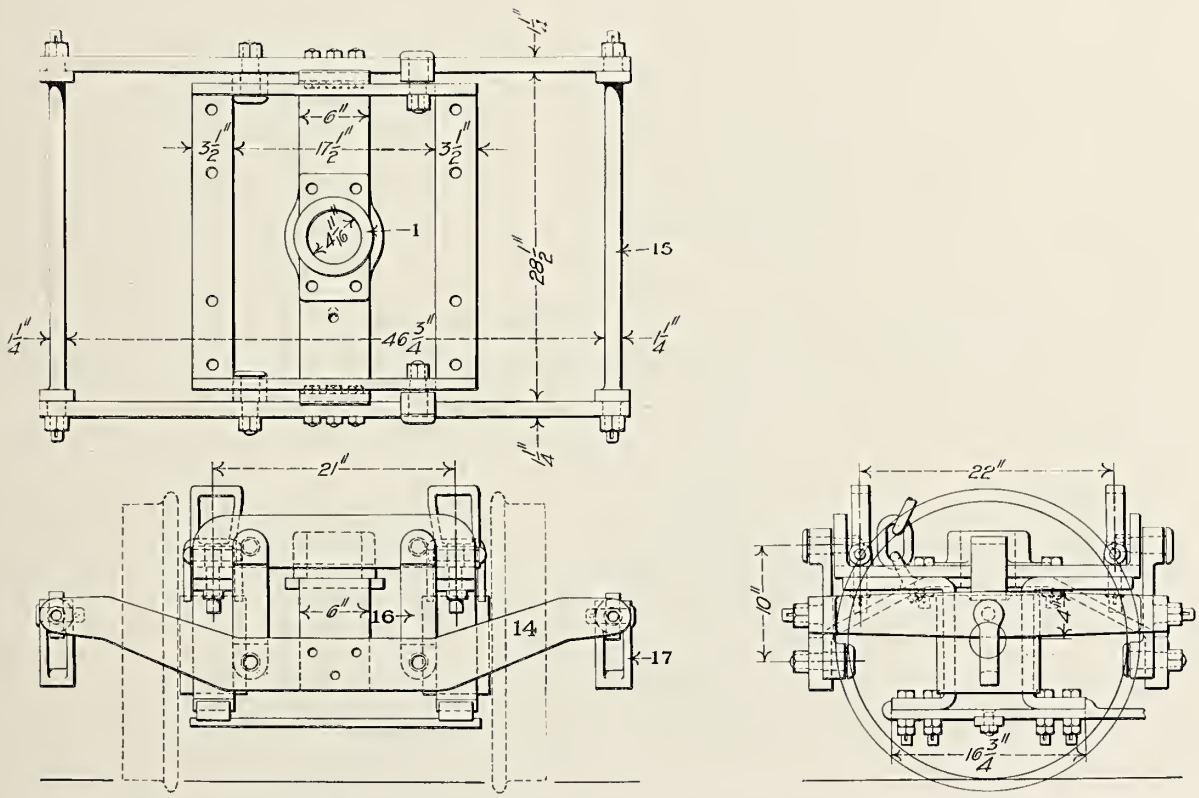

Fig. 1030—Rear Truck with Inside Bearings and Outside Equalization for Narrow Gage Four-Coupled (2-4-2) Locomotive; Baldwin Locomotive Works.

Numbers Refer to Names of Parts on Page 480.

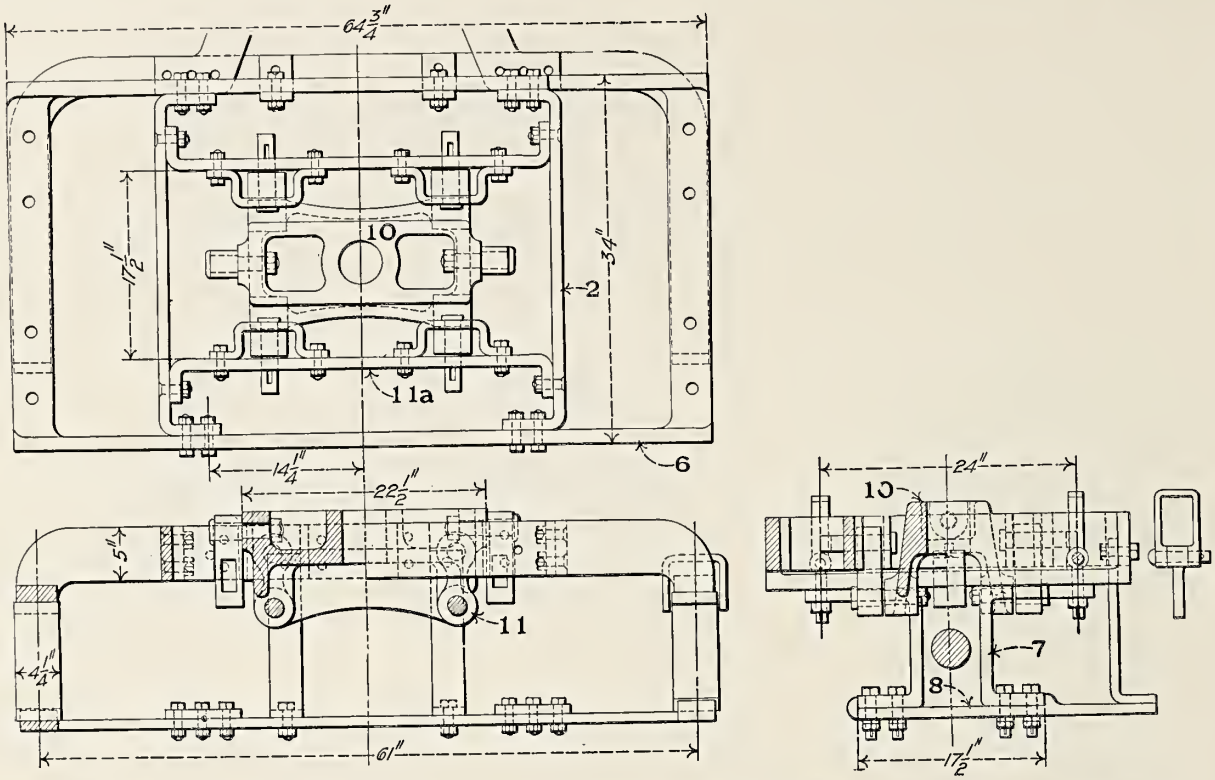

Fig. 1031—Rear Truck for Six-Coupled (2-6-2) Narrow Gage Locomotive; Baldwin Locomotive Works.

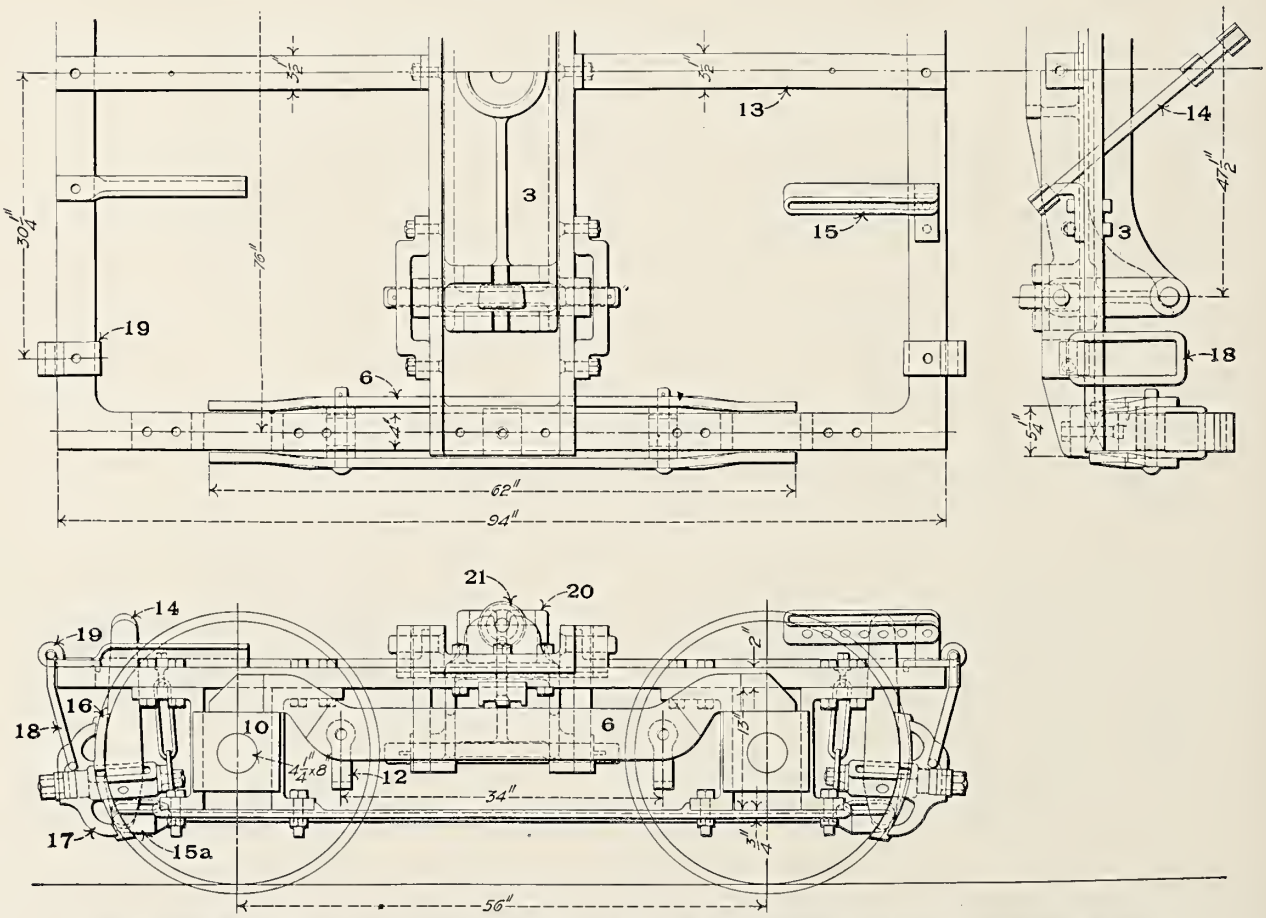

Fig. 1032—Rear Truck for Four-Coupled (2-4-4) Tank Locomotive; Baldwin Locomotive Works.

Numbers Refer to Names of Parts on Page 480.

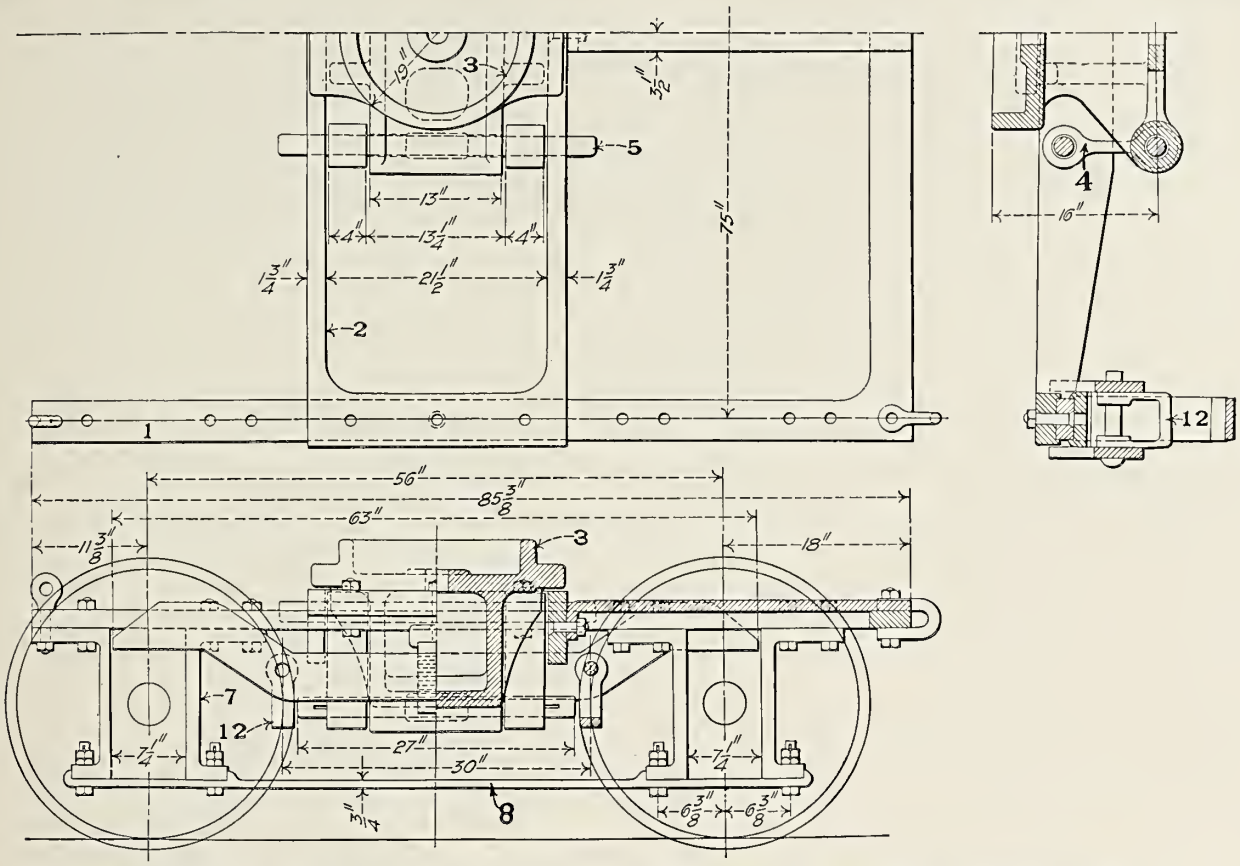

Fig. 1033—Rear Truck for Four-Coupled (2-4-4) Tank Locomotive; Baldwin Locomotive Works.

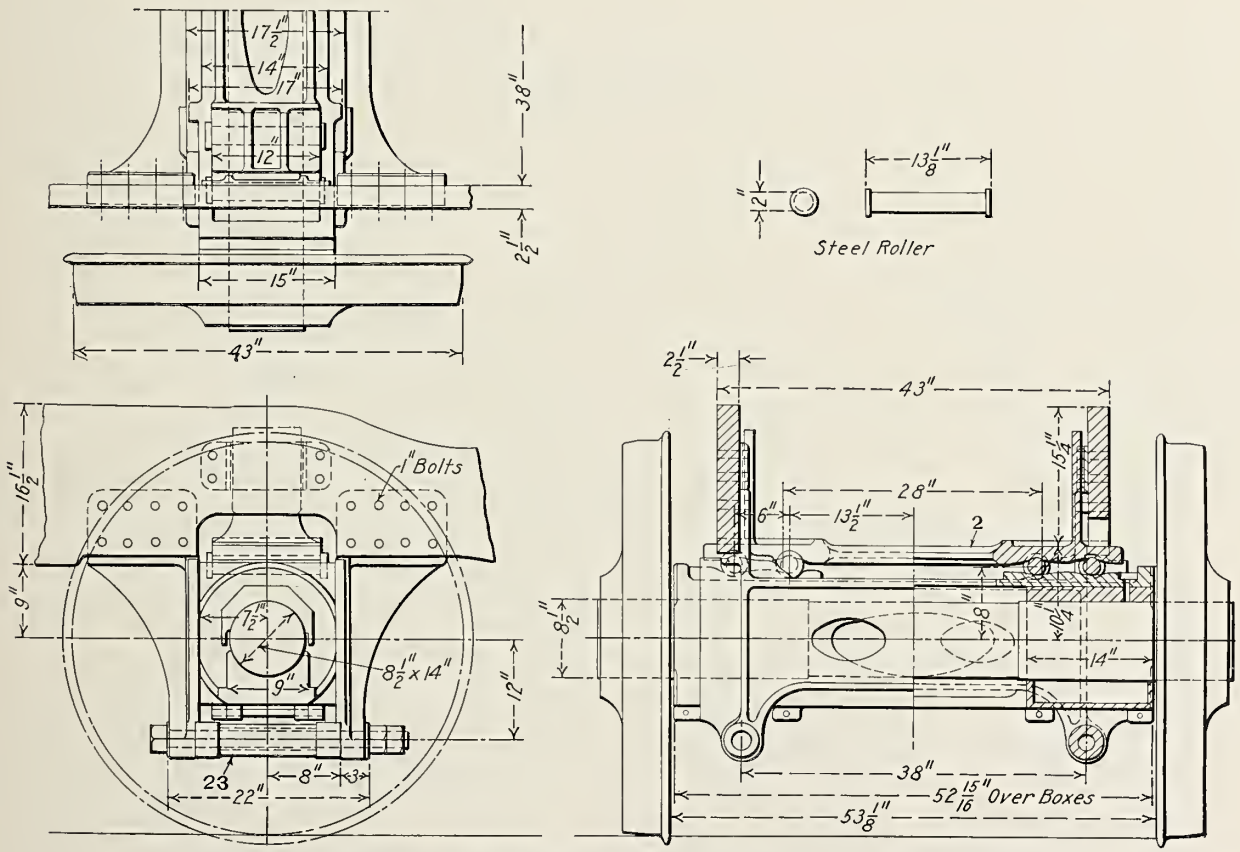

Fig. 1034—Barber-De Voy Trailing Truck; Standard Car Truck Company.

Numbers Refer to Names of Parts on Page 480.

Names of Parts of Trailing Trucks, Figs. 1027-1031.

1 *Center Plate*
2 *Transom*
6 *Side Frame*
7 *Pedestal*
8 *Pedestal Tie Bar*
10 *Center Pin Guide or Swing Bolster*
11 *Center Pin Guide Hanger or Swing Link*
11a *Center Pin Guide Hanger Bracket*
12 *Journal Box*
13 *Journal Box Spring*
13a *Journal Box Yoke*
14 *Equalizer*
17 *Spring Hanger*
18 *Side Bearing*
19 *Axle Collar*

Names of Parts of Trailing Trucks, Figs. 1032-1033.

1 *Frame*
2 *Transom*
3 *Swing Bolster or Center Plate*
4 *Swing Link*
5 *Swing Link Pin*
6 *Equalizer*
7 *Pedestal*
8 *Pedestal Tie Bar*
10 *Journal Box*
12 *Spring Hanger*
13 *Safety Beam*
14 *Brake Lever*
15 *Brake Lever Guide*
15a *Brake Lever Rod*
16 *Brake Shoe*
17 *Brake Head*
18 *Brake Hanger*
19 *Brake Hanger Bracket*
20 *Side Bearing Casting*
21 *Side Bearing Roller*
23 *Pedestal Brace*

Names of Parts of Journal Boxes, Figs. 1037-1043.

1 *Cellar*
2 *Box*
3 *Brass or Bearing*
4 *Babbitt Lining*
5 *Cellar Wedge*
6 *Cellar Wedge Bolt*
7 *Waste Cavity*
8 *Oil Hole*
9 *Box Lid*
11 *Hub Liner*
13 *Box Flange*
14 *Box Lid Spring*

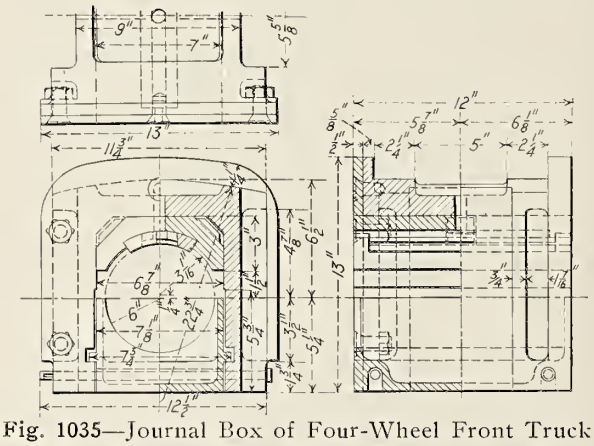

Fig. 1035—Journal Box of Four-Wheel Front Truck for Mountain Type (4-8-2) Locomotive. Built for the Chesapeake & Ohio by the American Locomotive Company.

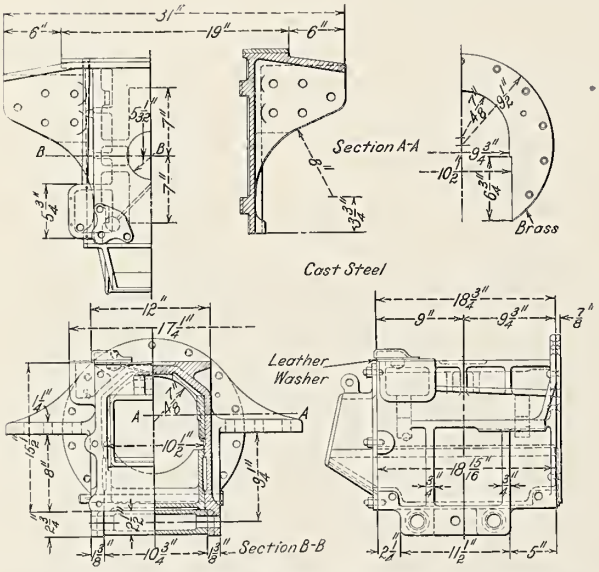

Fig. 1036—Journal Box of Trailing Truck for Mikado (2-8-2) Locomotive. Built for the Missouri Pacific by the American Locomotive Company.

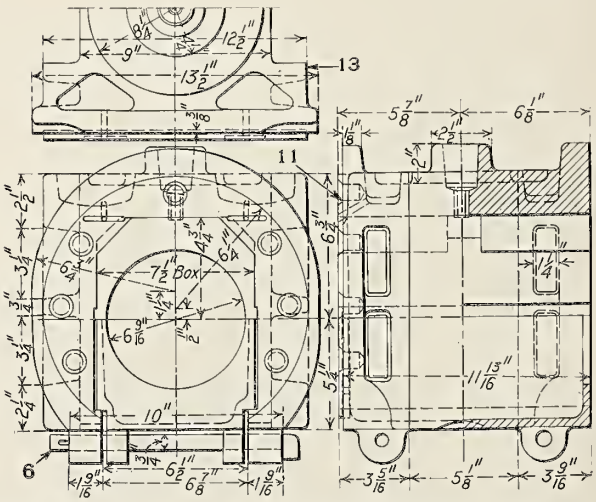

Fig. 1037—Journal Box of Pony Truck for Mikado (2-8-2) Locomotive. Built for the Chesapeake & Ohio by the American Locomotive Company.

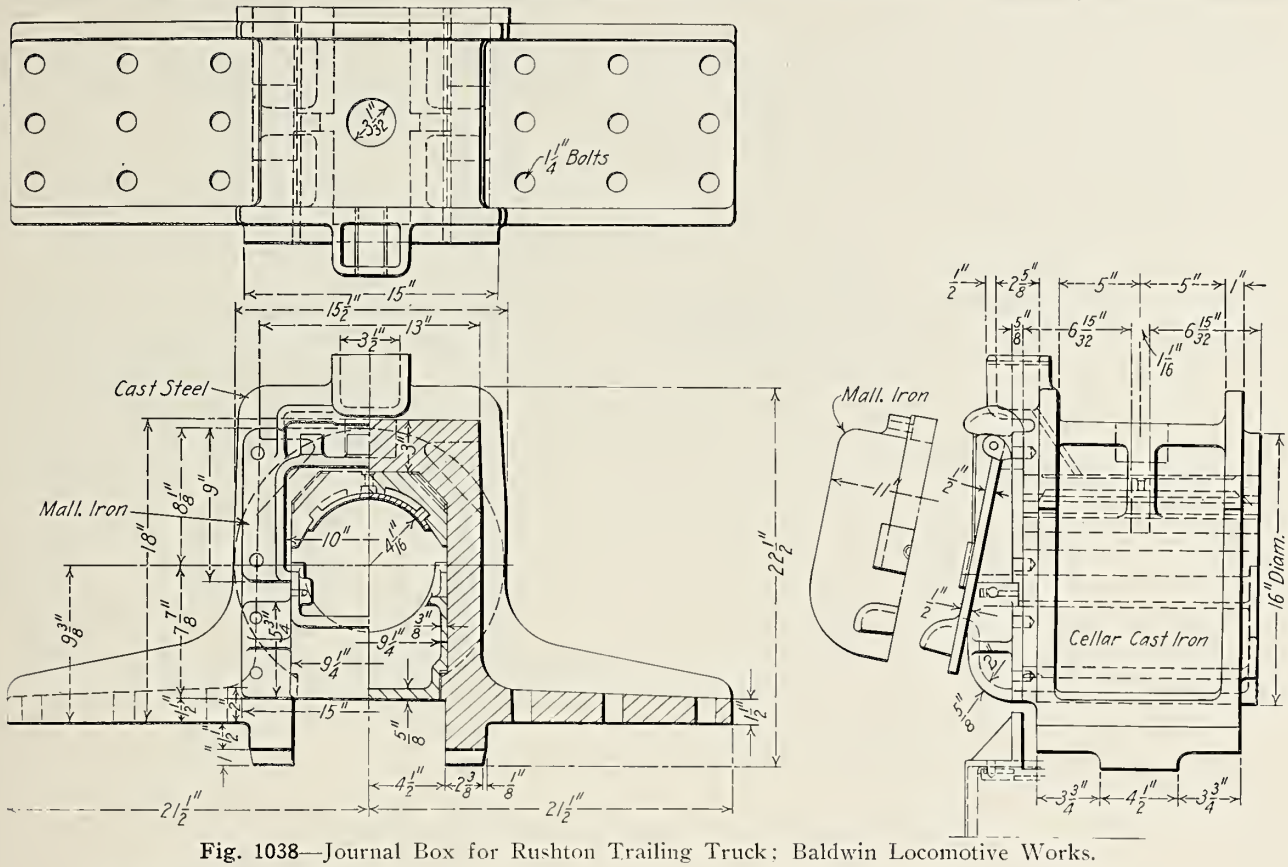

Fig. 1038—Journal Box for Rushton Trailing Truck; Baldwin Locomotive Works.

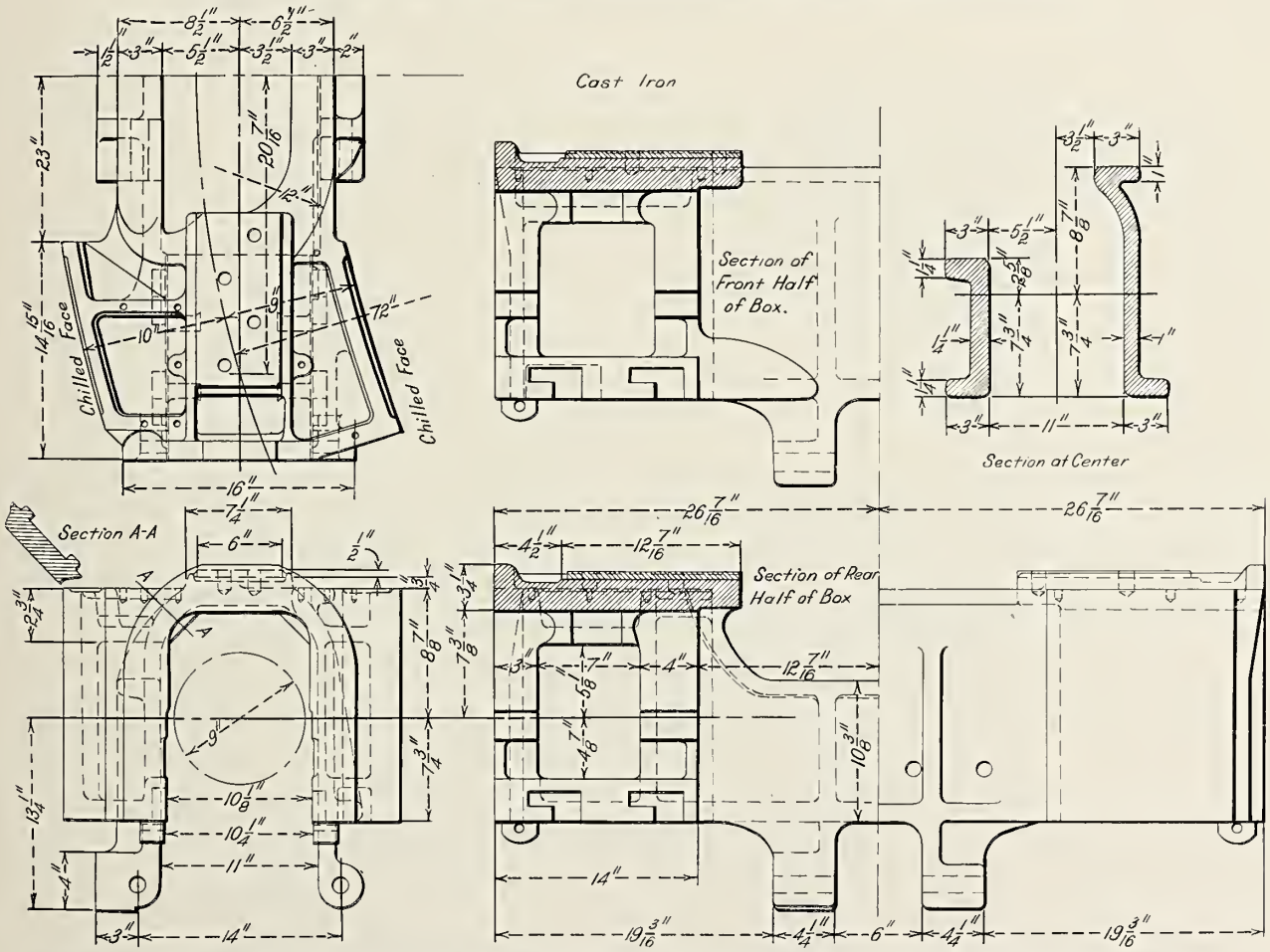

Fig. 1039—Combined Journal Boxes of Trailing Truck for Mountain Type (4-8-2) Locomotive. Built for the Chesapeake & Ohio by the American Locomotive Company.

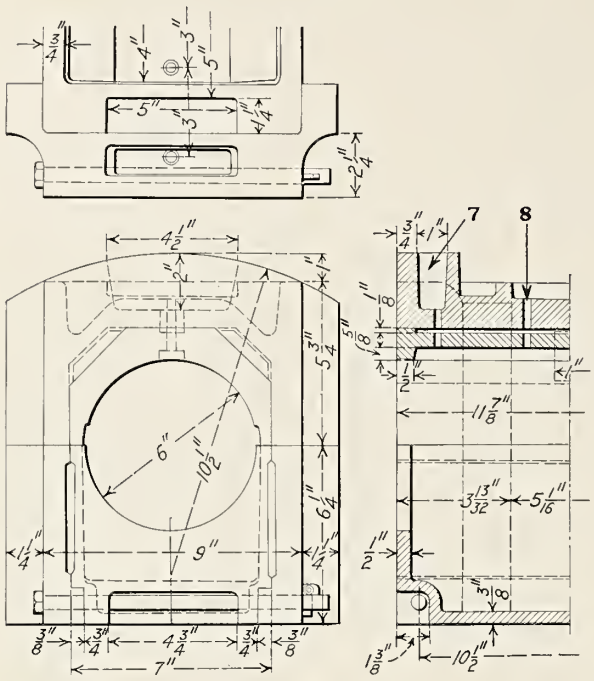

Fig. 1040—Journal Box for Four-Wheel Front Truck on Pacific Type (4-6-2) Locomotive. Built for the Nashville, Chattanooga & St. Louis by the Baldwin Locomotive Works.

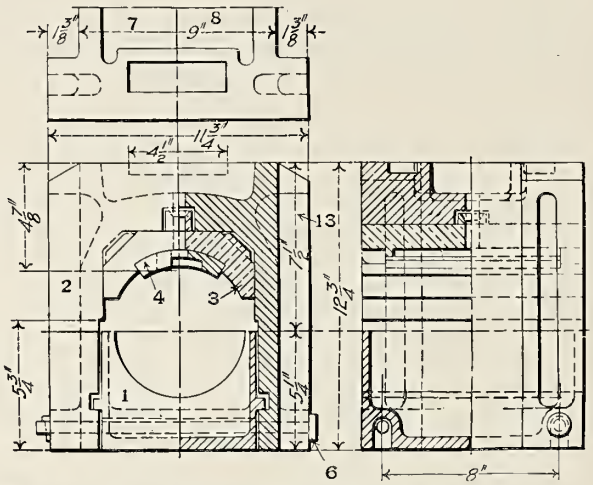

Fig. 1041—Front Engine Truck Journal Box; American Locomotive Company.

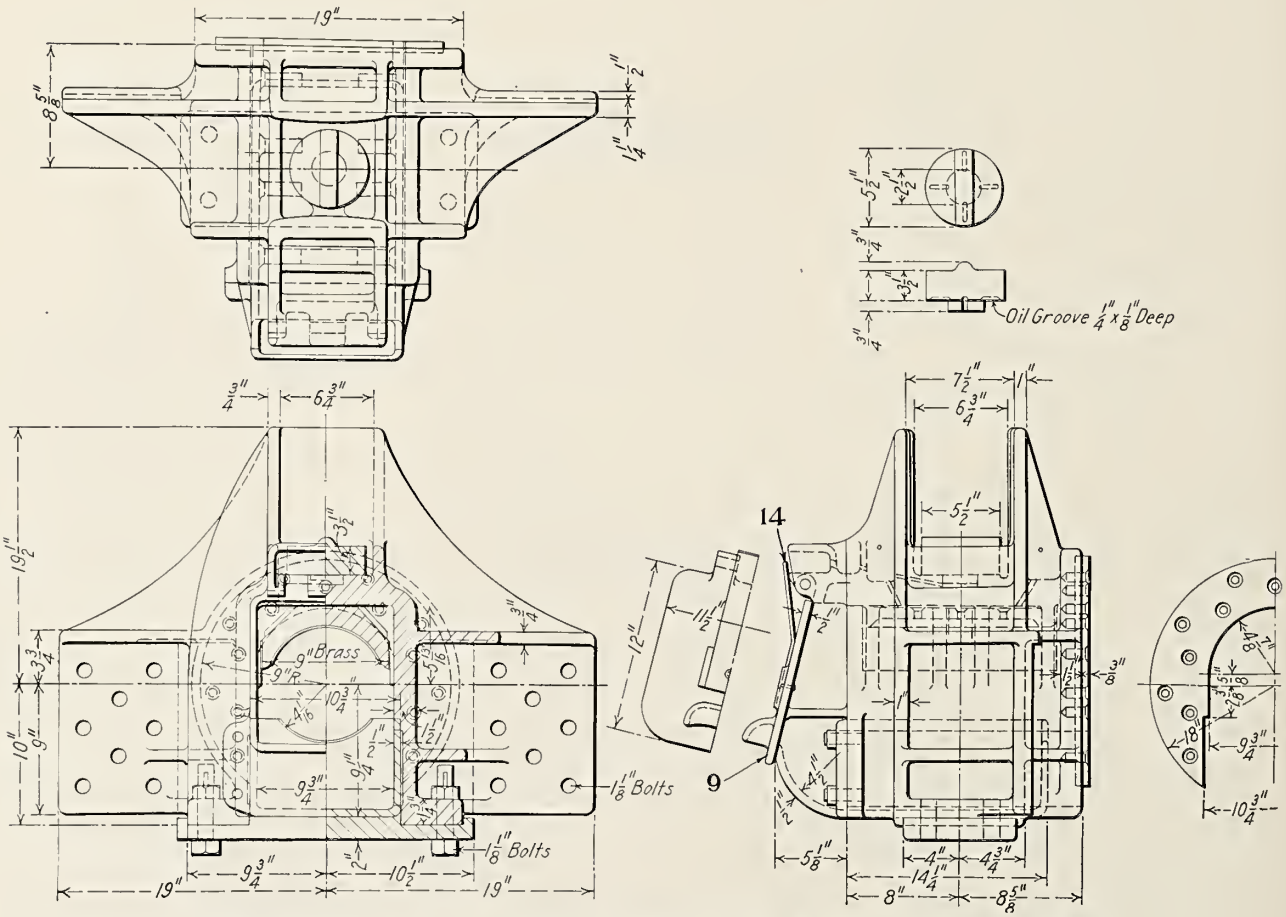

Fig. 1042—Journal Box for Hodges Trailing Truck; Baldwin Locomotive Works.

Numbers Refer to Names of Parts on Page 480.

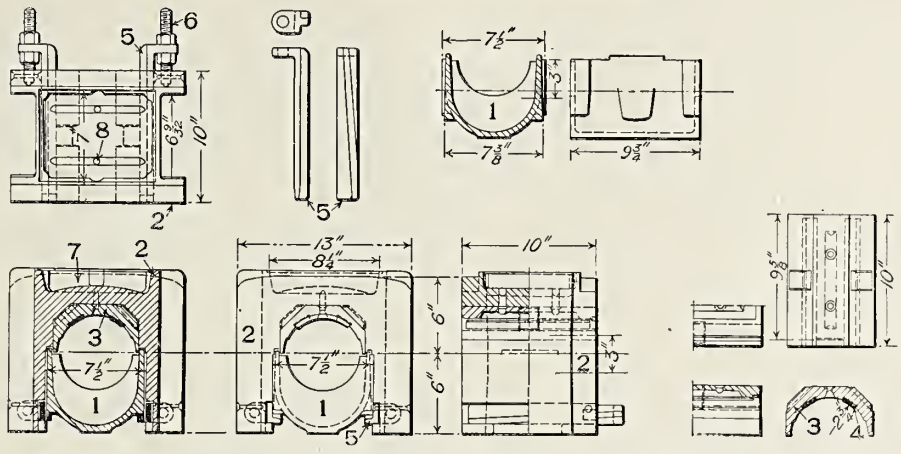

Fig. 1043—Journal Box of Front Engine Truck for Atlantic Type (4-4-2) Locomotive, Journals 5½ in. x 10 in.; Pennsylvania Railroad.

Names of Parts of Axles, Figs. 1044-1048.

1 *Wheel Seat*
2 *Journal*
3 *Center*
10 *Collar*

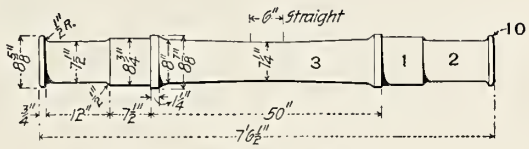

1044—Trailing Truck Axle.

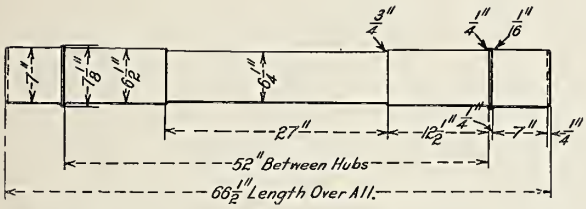

Fig. 1045—Pony Truck Axle for Mikado (2-8-2) Locomotive.

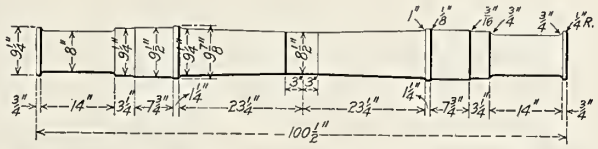

Fig. 1046—Trailing Truck Axle for Mikado (2-8-2) Locomotive.

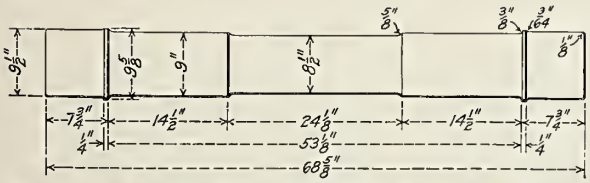

Fig. 1047—Trailing Truck Axle for Mountain Type (4-8-2) Locomotive.

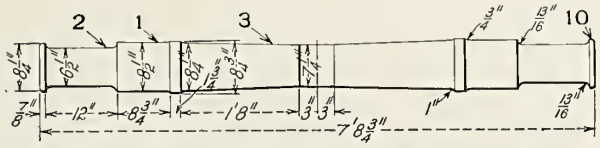

Fig. 1048—Trailing Truck Axle for Atlantic Type (4-4-2) Locomotive.

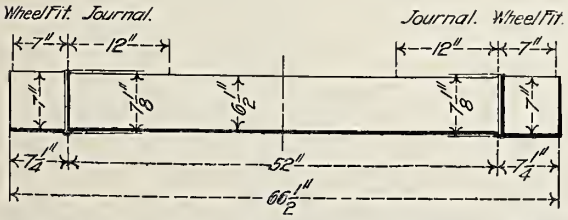

Fig. 1049—Pony Truck Axle for Consolidation (2-8-0) Locomotive.

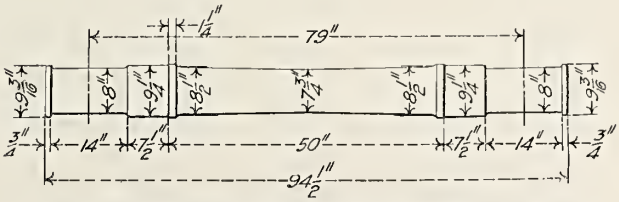

Fig. 1050—Trailing Truck Axle for Atlantic Type (4-4-2) Locomotive.

Names of Parts of Pilots, Figs. 1052-1056.

1 *Engine Frame*
2 *Bumper Angle*
3 *Pilot Brace*
4 *Pilot or Bumper Beam*
5 *Uncoupling Lever Shaft Bearing*
6 *Uncoupling Lever Arm*
7 *Uncoupling Chain*
8 *Coupler Head*
9 *Coupler Knuckle*
10 *Coupler Knuckle Pin*
11 *Coupler Pocket*
12 *Back Bar Bracket*
13 *Back Vertical of Pilot*
14 *Pilot Bars*
15 *Pilot Nosing*
16 *Pilot Base*
18 *Lower Pilot Step*
21 *Uncoupling Lever Shaft*
22 *Top Bar of Pilot*
32 *Front Platform Plate*

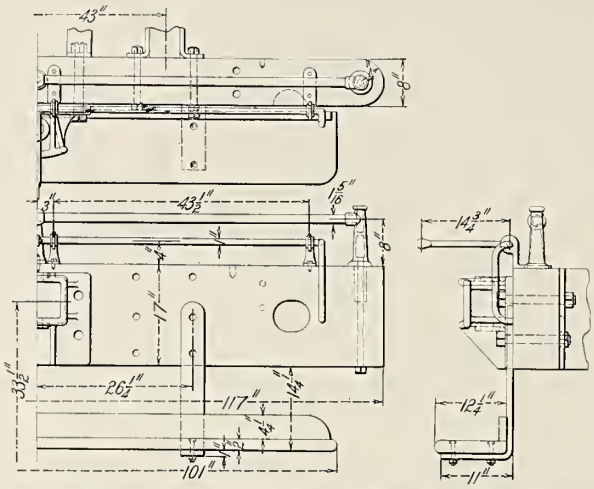

Fig. 1051—Cast Iron Pilot Beam for Six-Wheel (0-6-0) Switching Locomotive; Baldwin Locomotive Works.

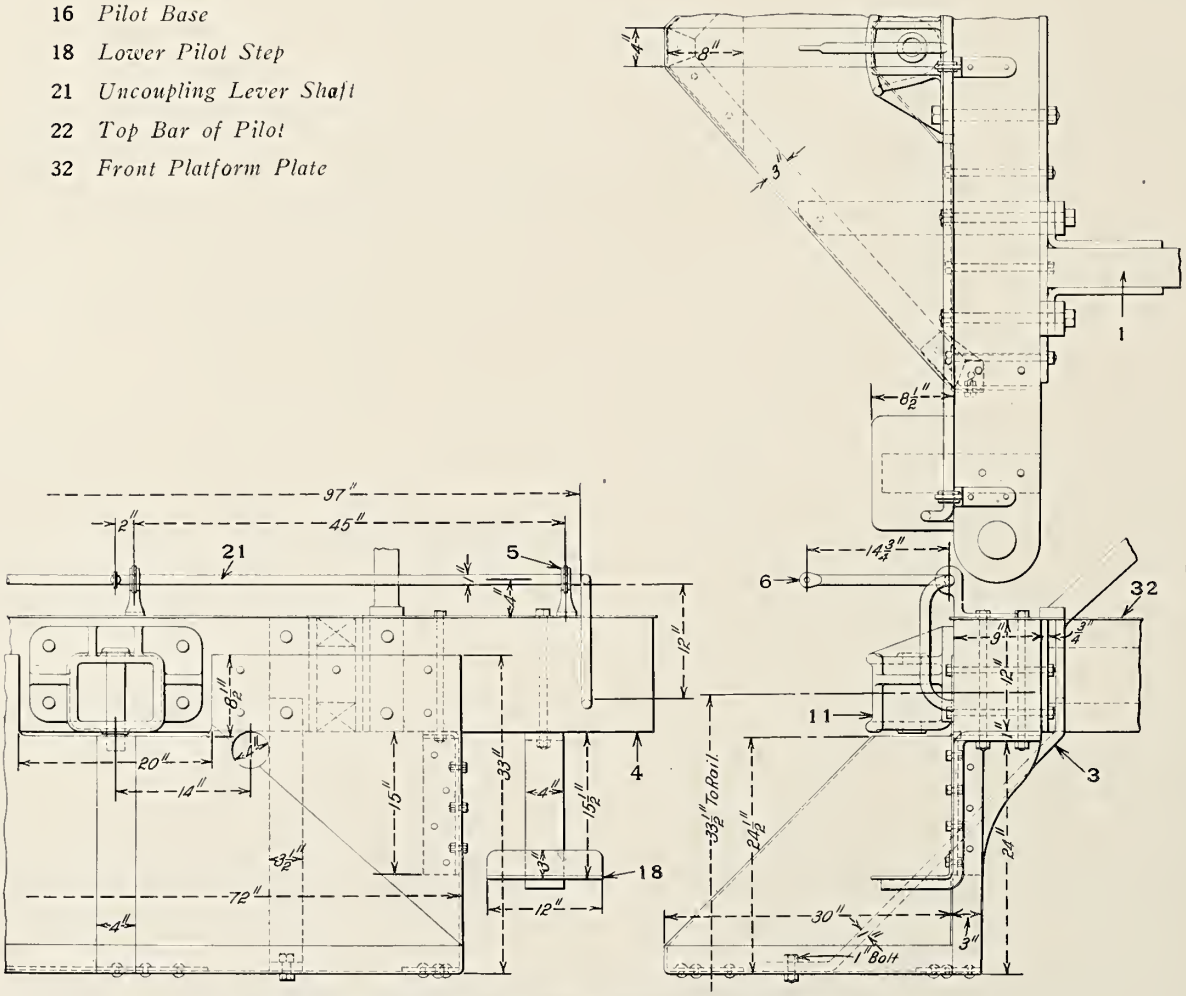

Fig. 1052—Pressed Steel Pilot; Baldwin Locomotive Works.

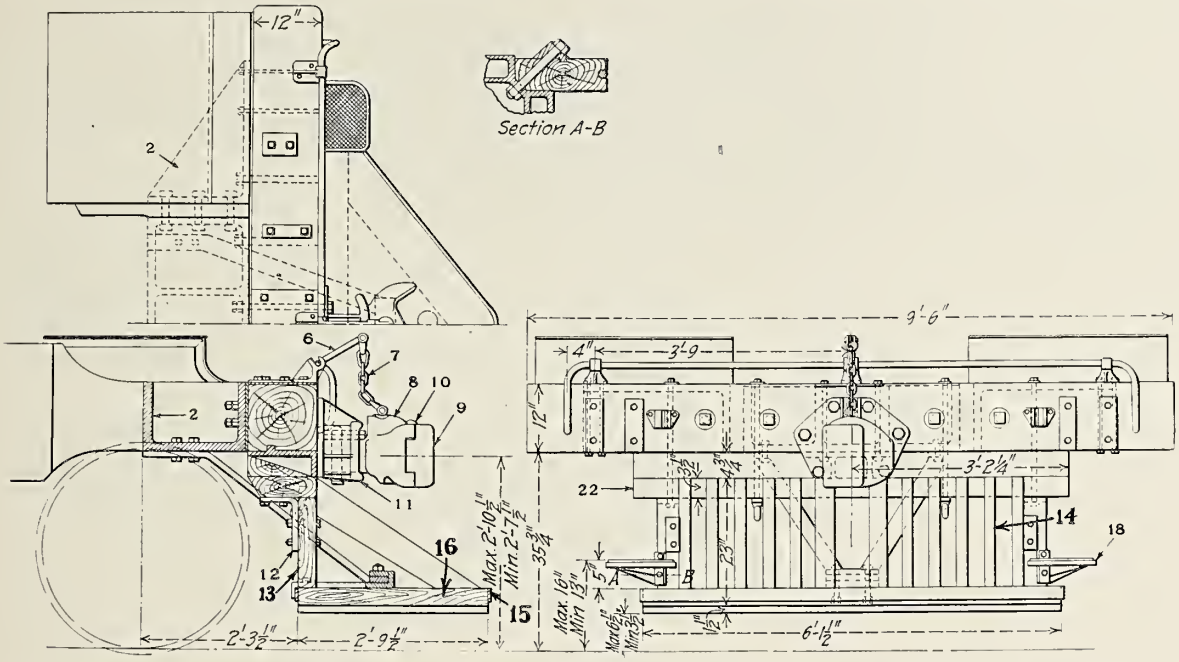

Fig. 1053—Wood Pilot for Class E6 Atlantic Type (4-4-2) Locomotive; Pennsylvania Railroad.

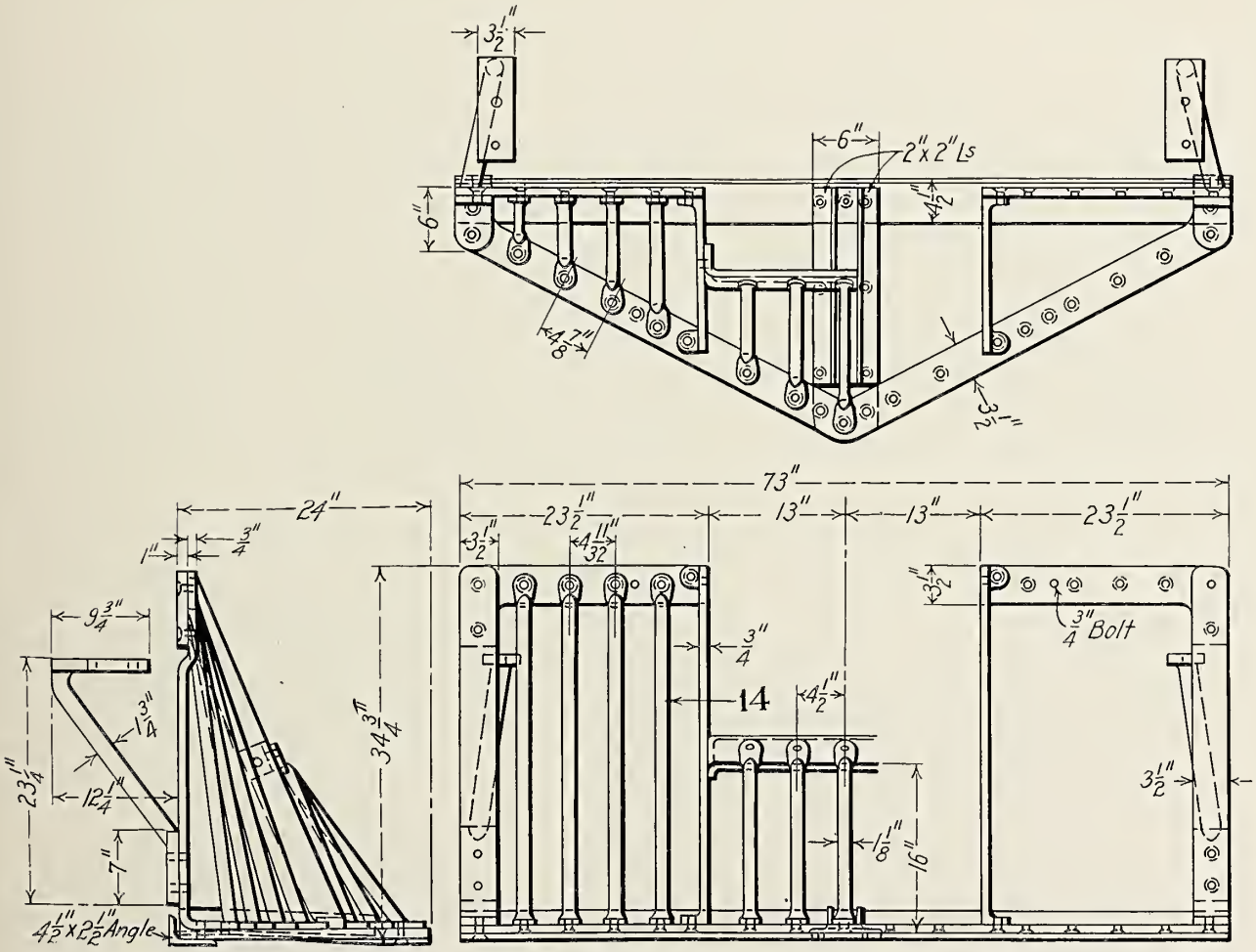

Fig. 1054—Iron Pilot; American Locomotive Company.

Numbers Refer to Names of Parts on Page 484.

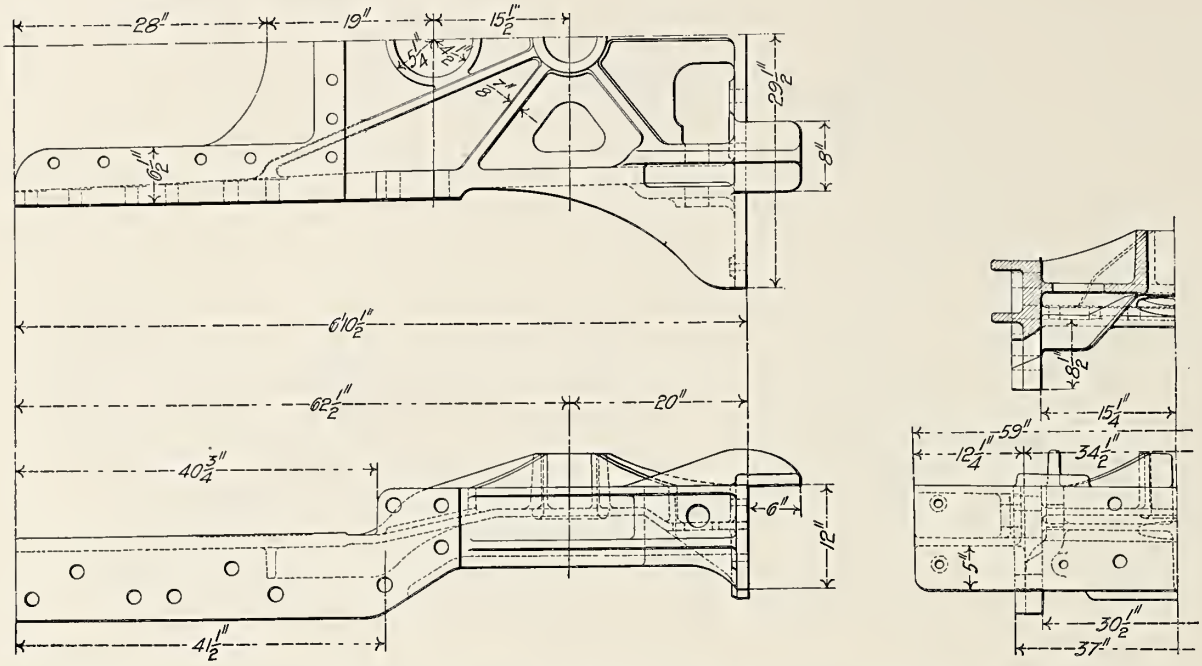

Fig. 1055—Combined Front Bumper Casting and Pony Truck Center Pin Guide for Consolidation (2-8-0) Locomotive; American Locomotive Company.

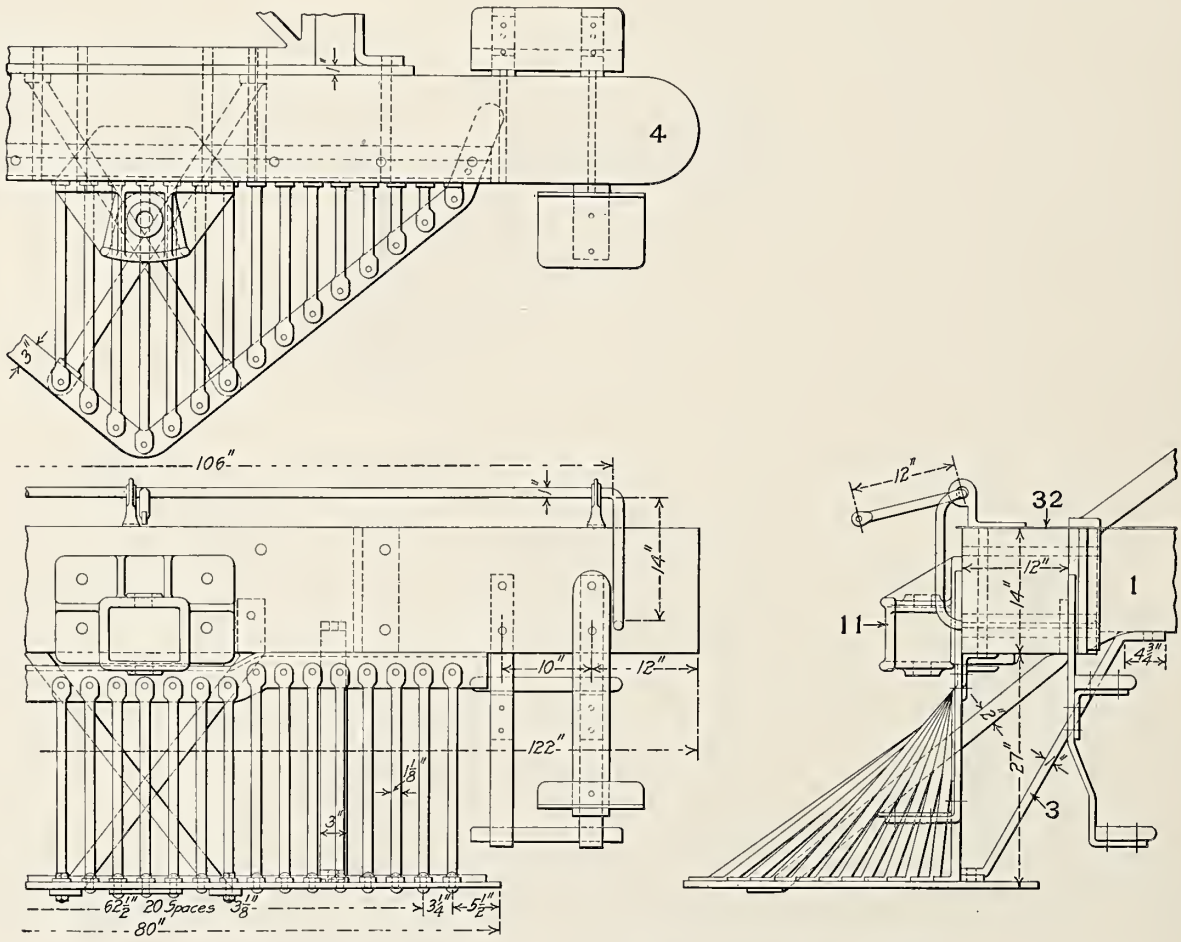

Fig. 1056—Built-up Iron Pilot; Baldwin Locomotive Works.
Numbers Refer to Names of Parts on Page 484.

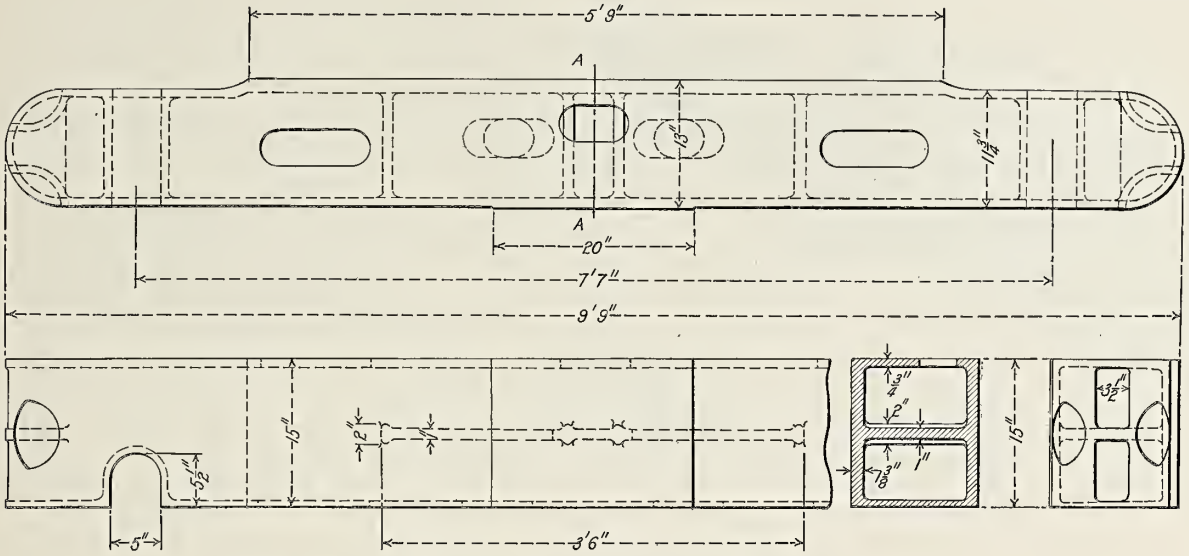

Fig. 1057—Cast Steel Pilot Beam; Commonwealth Steel Company.

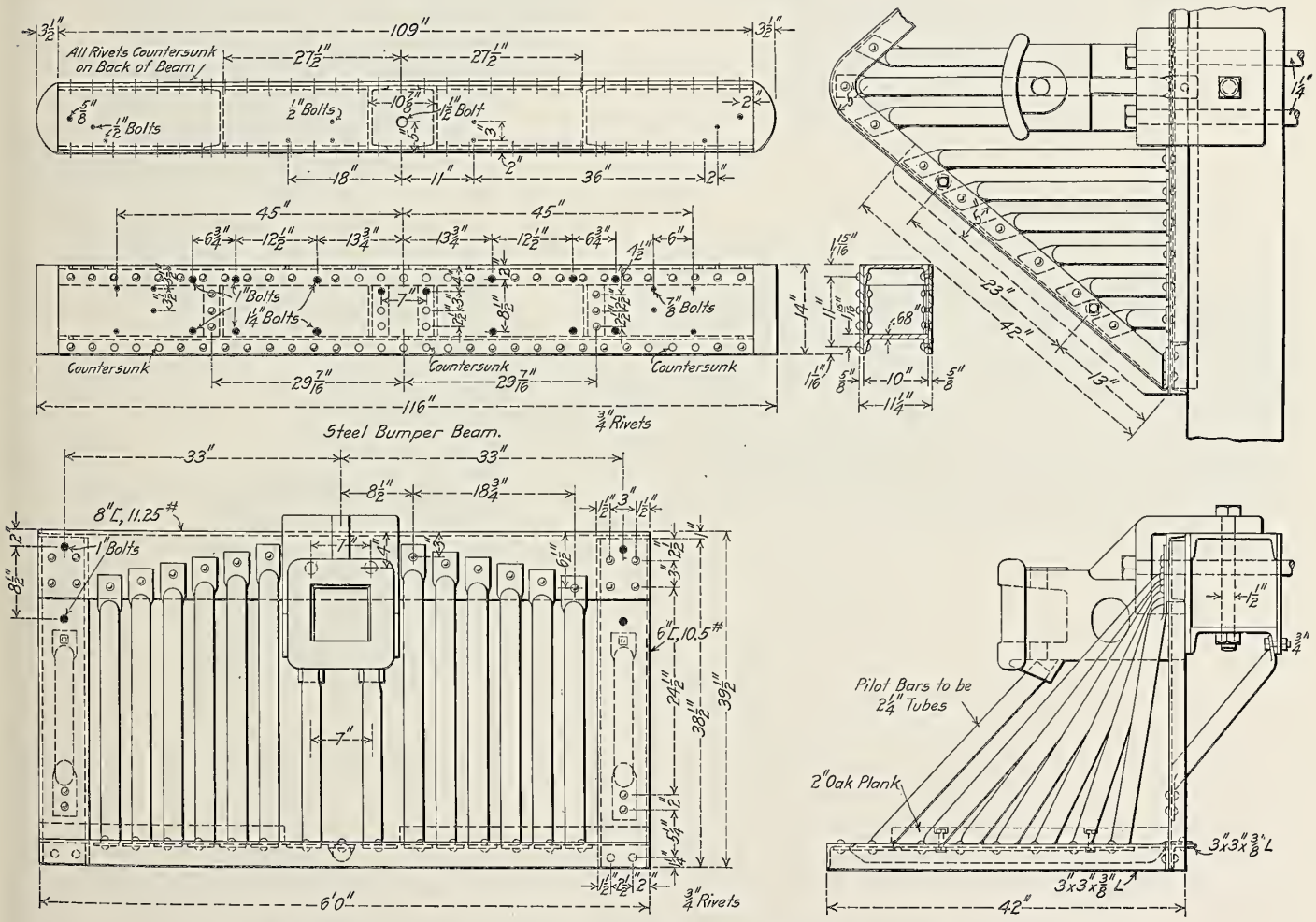

Fig. 1058—Built-up All-Steel Pilot and Pilot Beam; Duluth & Iron Range.

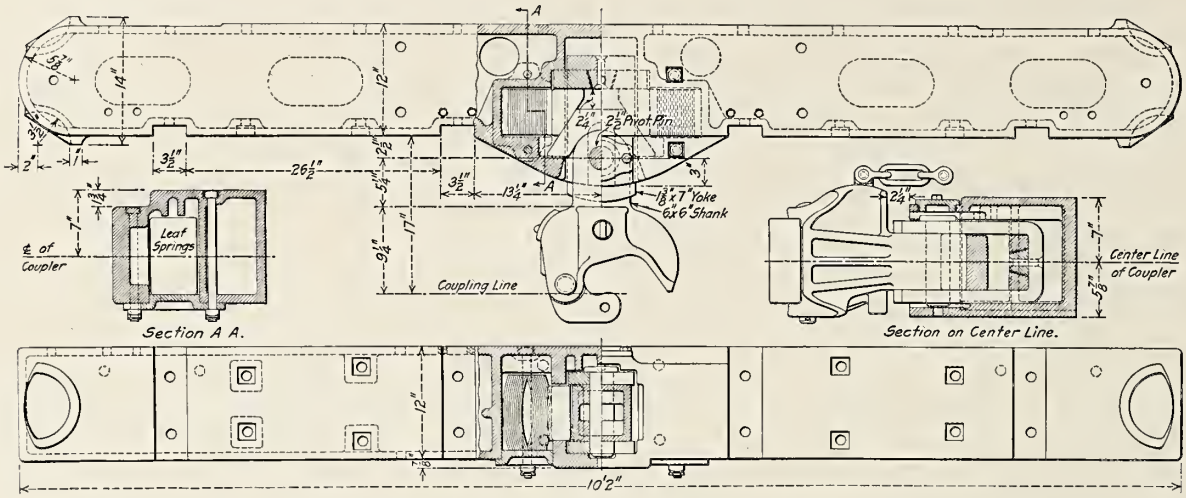

Fig. 1059—Cast Steel Pilot Beam with Friction Draft and Buffing Gear; Gould Coupler Company.

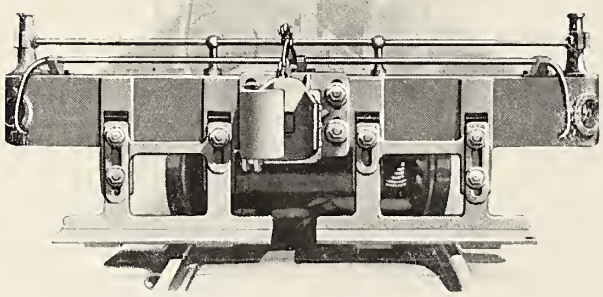

Fig. 1060—Adjustable Step Brackets for Yard Service; Commonwealth Steel Company.

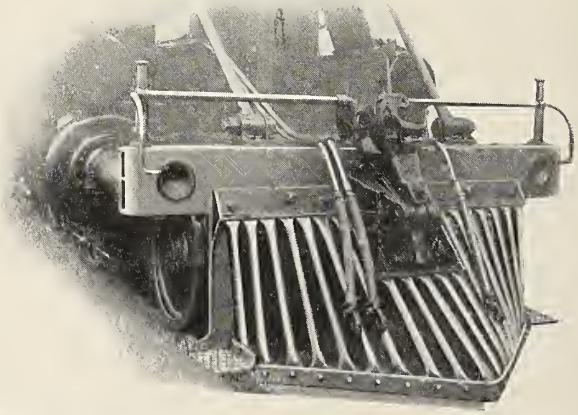

Fig. 1061—Built-up Steel Pilot; Commonwealth Steel Company.

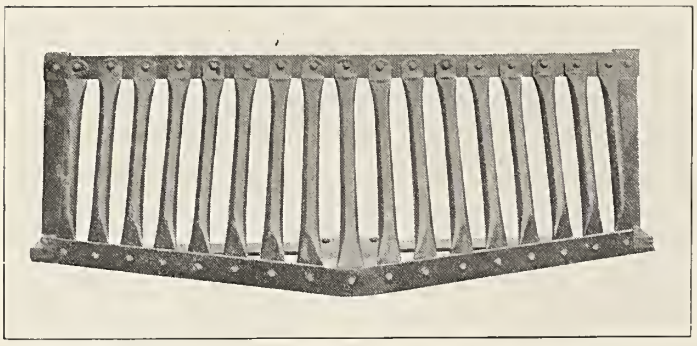

Fig. 1062—Built-up Iron Pilot with Bars Made from Scrap Boiler Tubes; Lehigh Valley.

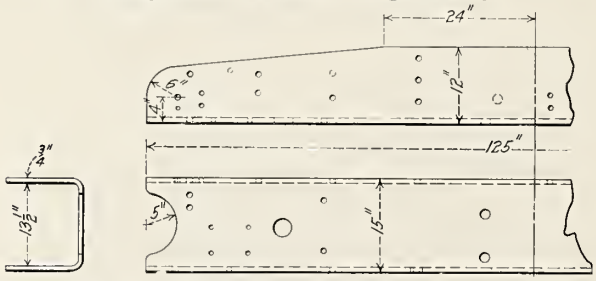

Fig. 1063—Pressed Steel Pilot Beam for Mountain Type (4-8-2) Locomotive.

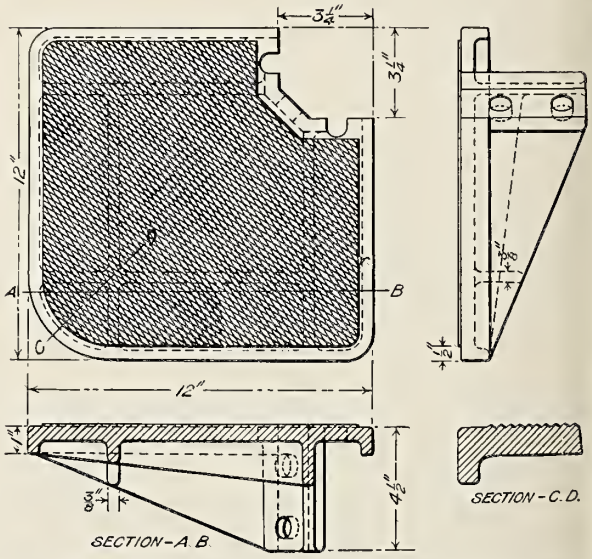

Fig. 1064—Pilot Step for Atlantic Type (4-4-2) Locomotive; Pennsylvania Railroad.

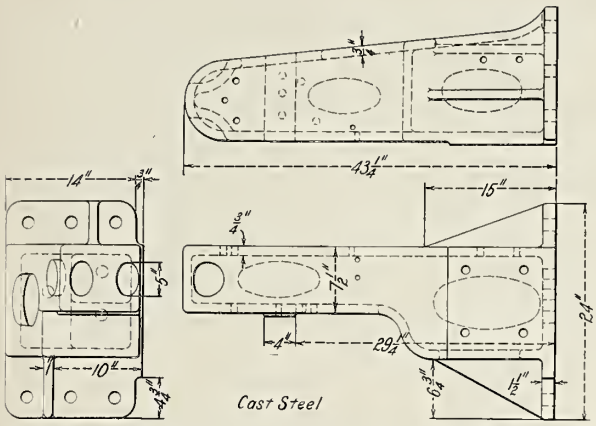

Fig. 1065—Cast Steel Pilot Beam for Mallet Articulated (0-8-8-0) Compound Locomotive. Built for the Delaware & Hudson by the American Locomotive Company.

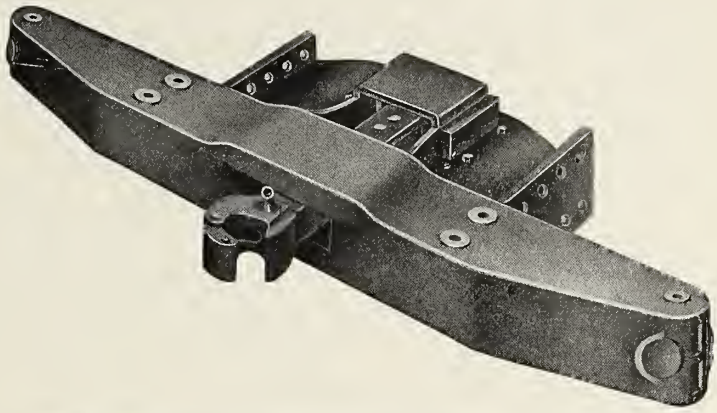

Fig. 1066—Cast Steel Pilot Beam with Double Acting Draft Gear; Commonwealth Steel Company.

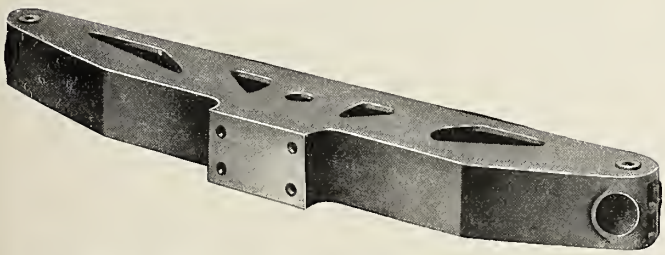

Fig. 1067—Cast Steel Pilot Beam; Commonwealth Steel Company.

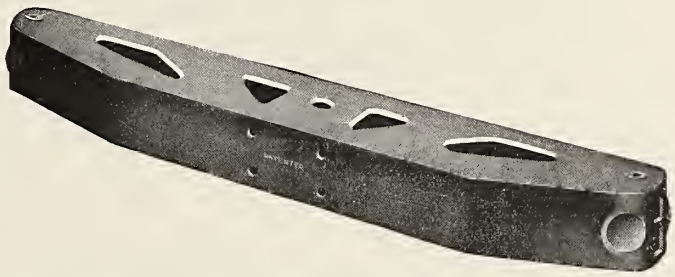

Fig. 1068—Cast Steel Pilot Beam; Commonwealth Steel Company.

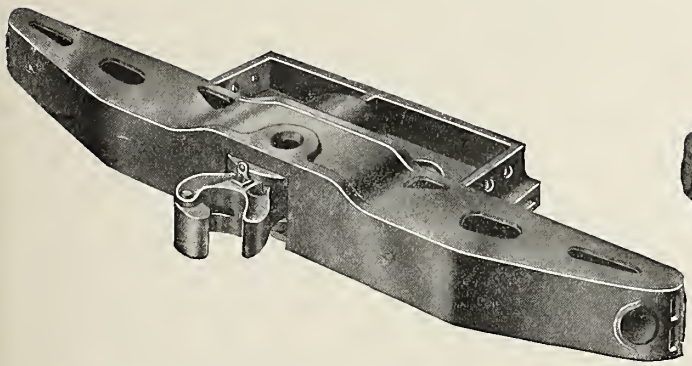

Fig. 1069—Cast Steel Pilot Beam with Flexible Buffing Gear; Commonwealth Steel Company.

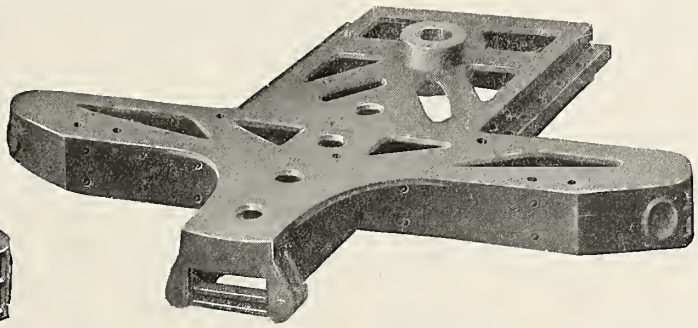

Fig. 1070—Cast Steel Pilot Beam for Mogul (2-6-0) Locomotive; Commonwealth Steel Company.

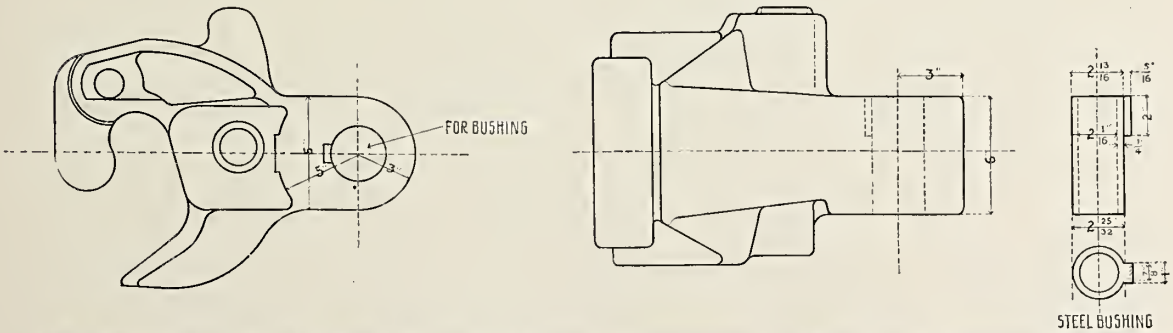

Fig. 1071—Major Pilot Coupler Head for Pivoted Attachment; Buckeye Steel Castings Company.

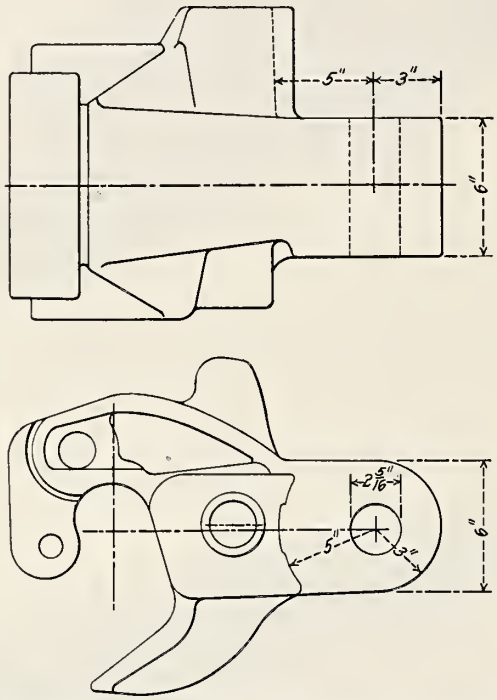

Fig. 1072—Major Pilot Coupler Head Style No. 32; Buckeye Steel Castings Company.

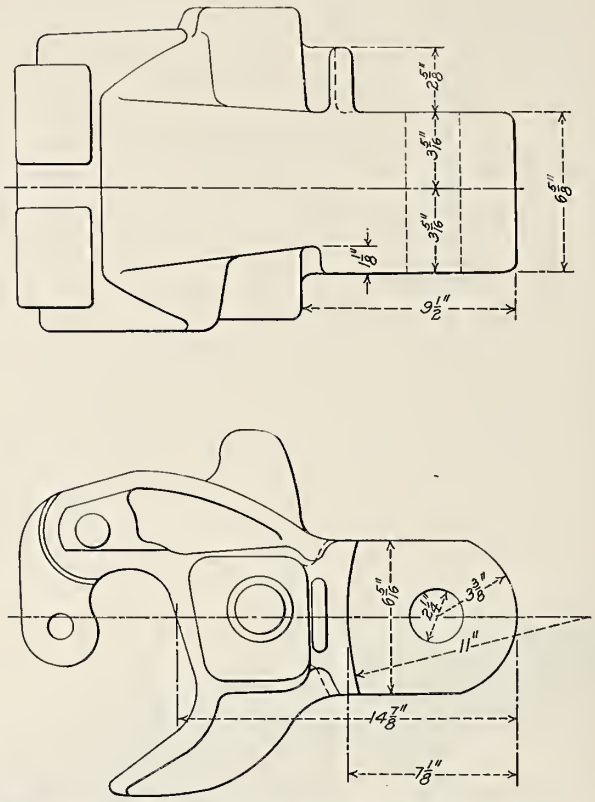

Fig. 1073—Major Coupler Head with Tender Shank; Buckeye Steel Castings Company.

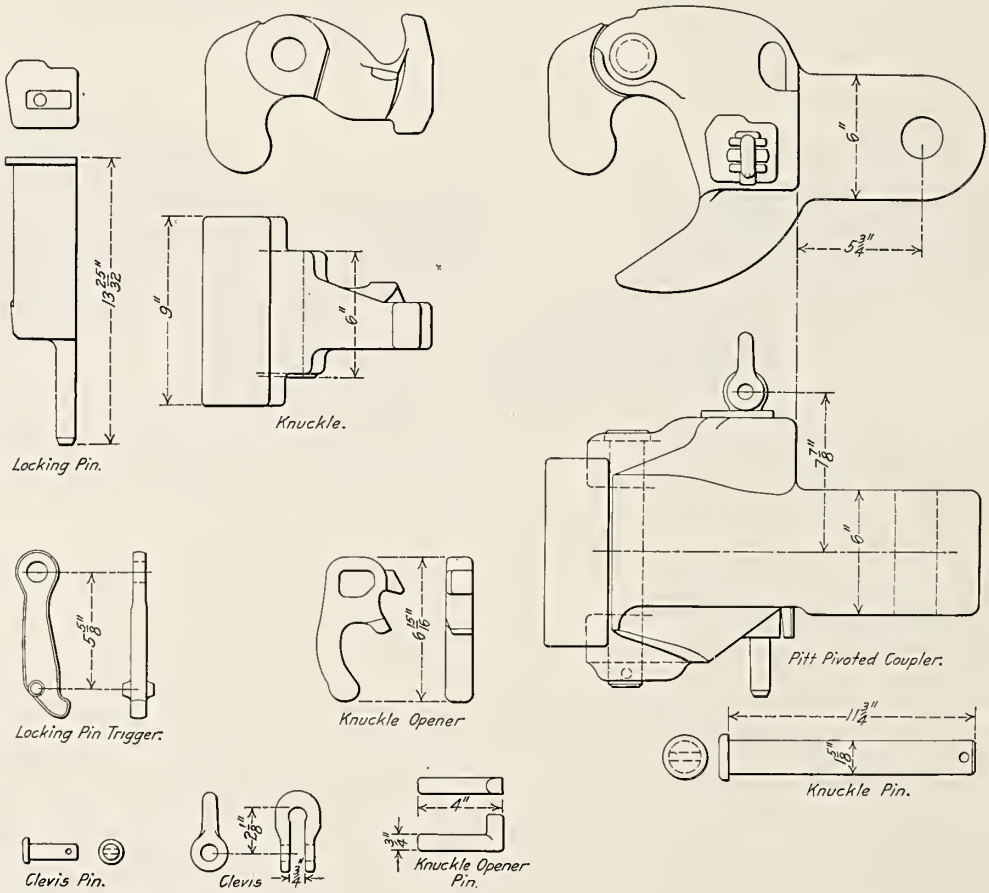

Fig. 1074—Pitt Pivoted Coupler No. X9154; The McConway & Torley Company.

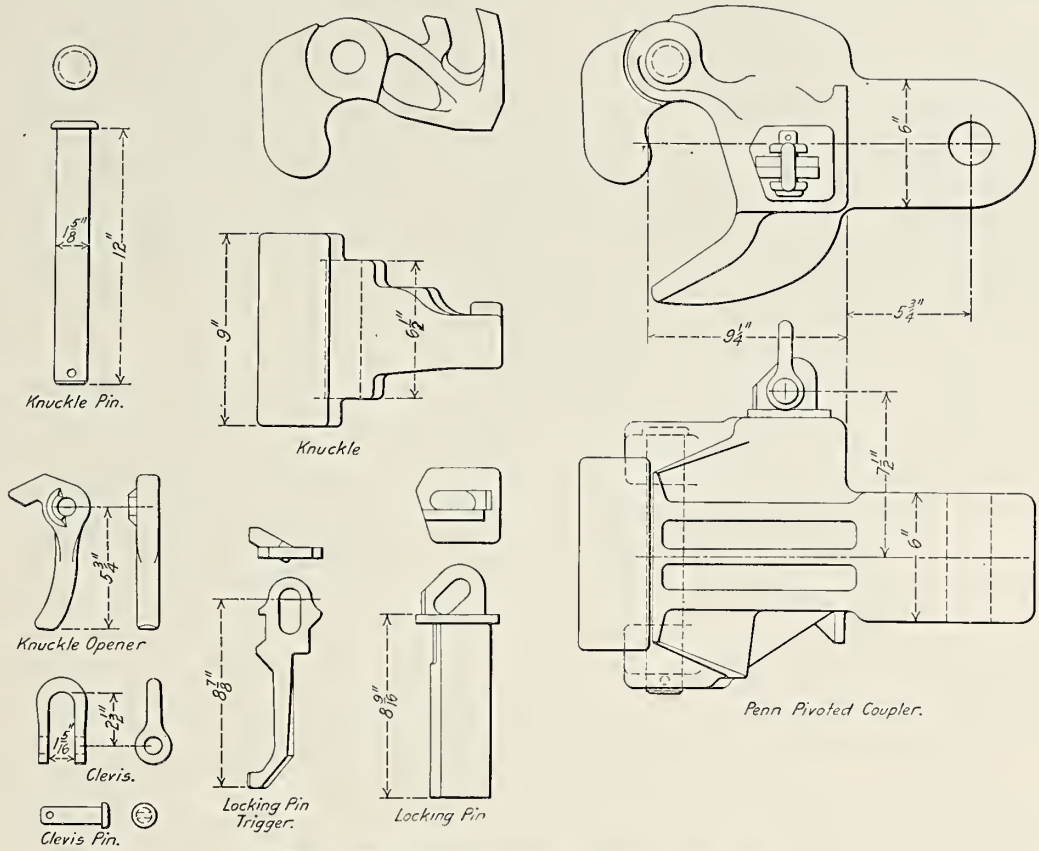

Fig. 1075—Penn Pivoted Coupler No. 5586.

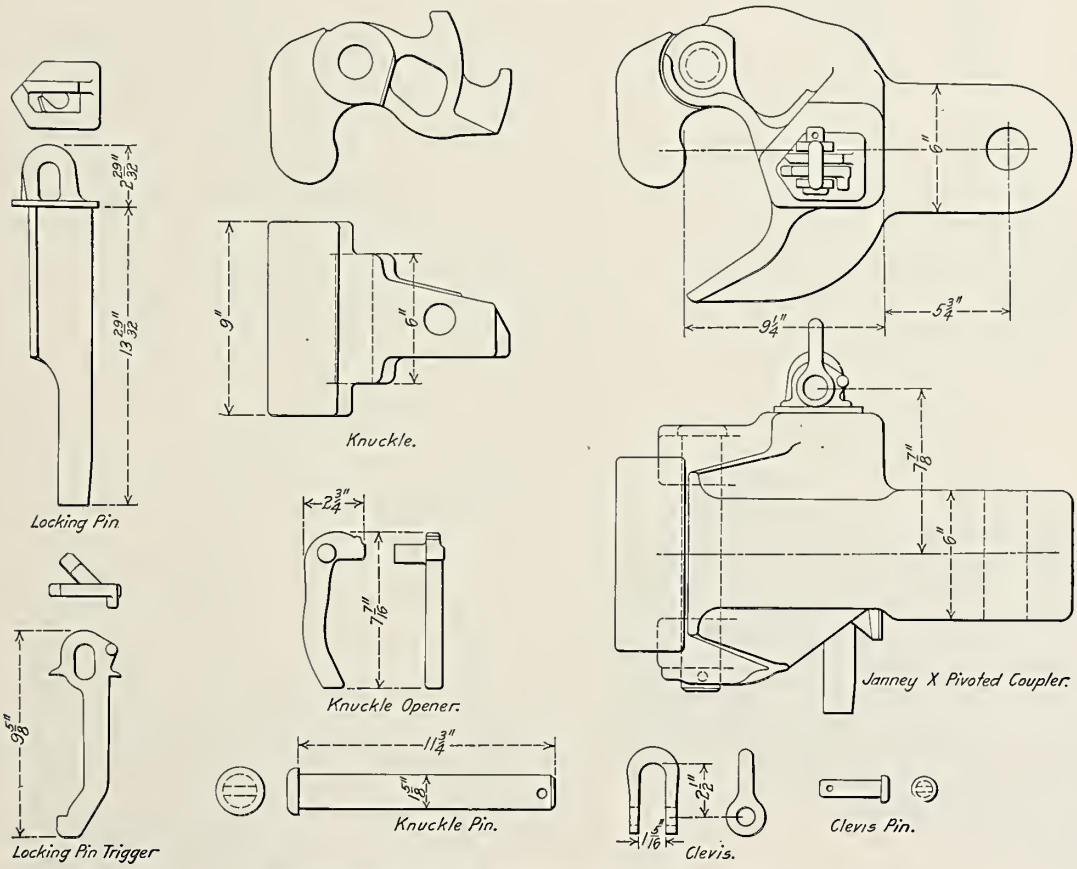

Fig. 1076—Janney X Pivoted Coupler No. 5269.

The McConway & Torley Company.

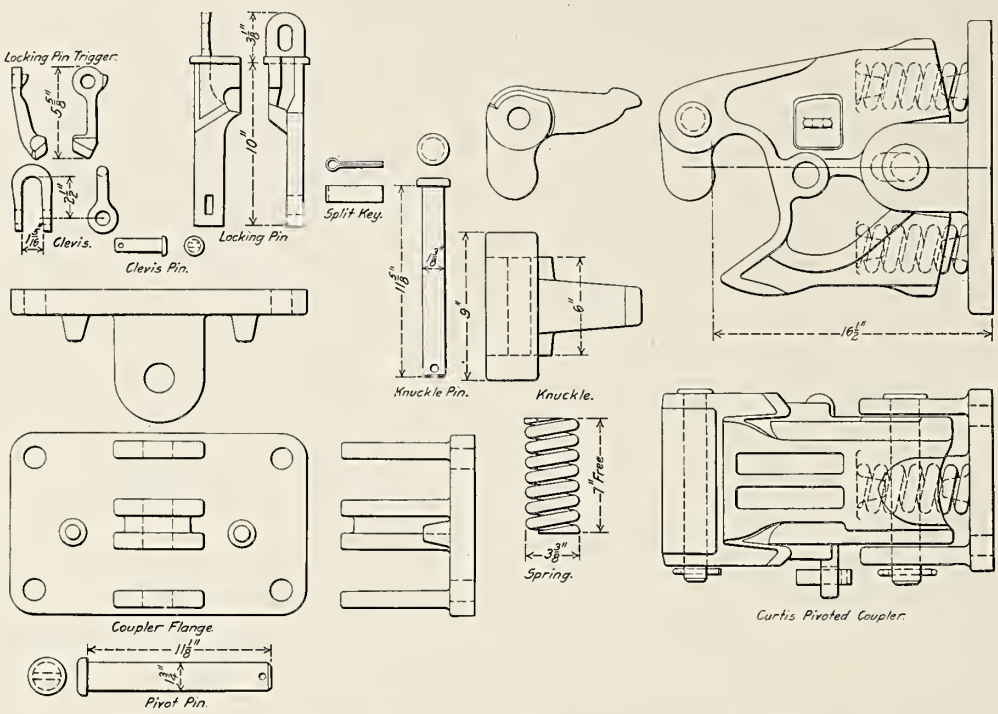

Fig. 1077—Curtis Pivoted Coupler No. 210D; The McConway & Torley Company.

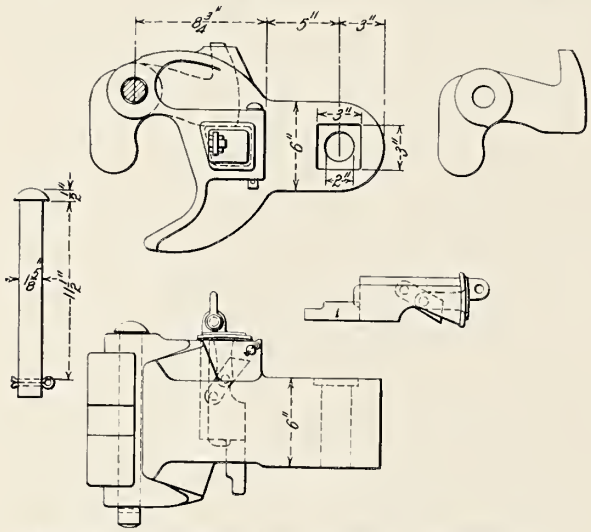

Fig. 1078—National Pilot Coupler; National Car Coupler Company.

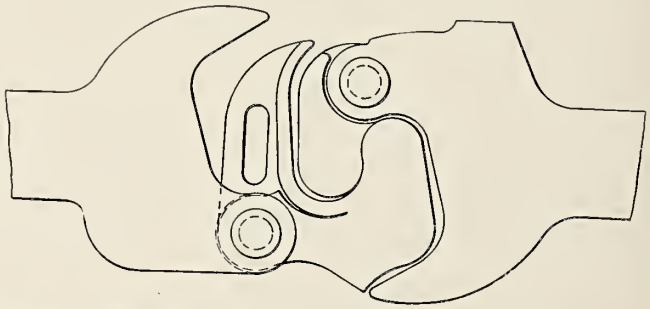

Fig. 1079—Hinson Emergency Knuckle; National Car Coupler Company.

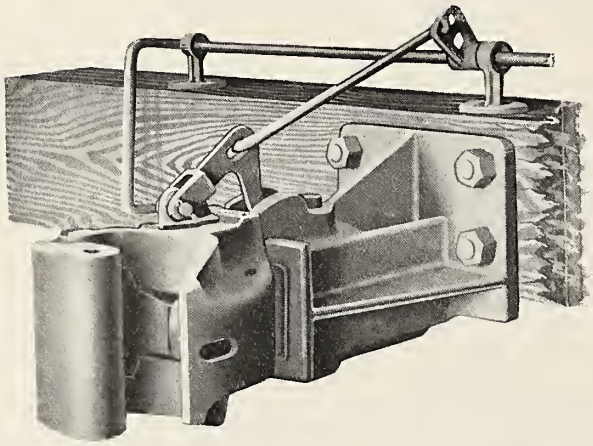

Fig. 1080—Simplex Engine Coupler; American Steel Foundries.

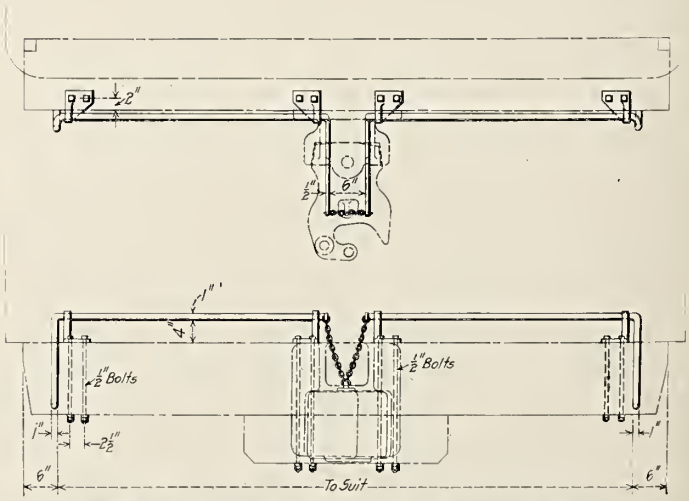

Fig. 1081—Uncoupling Lever for Switch Engines; Intercolonial Railway.

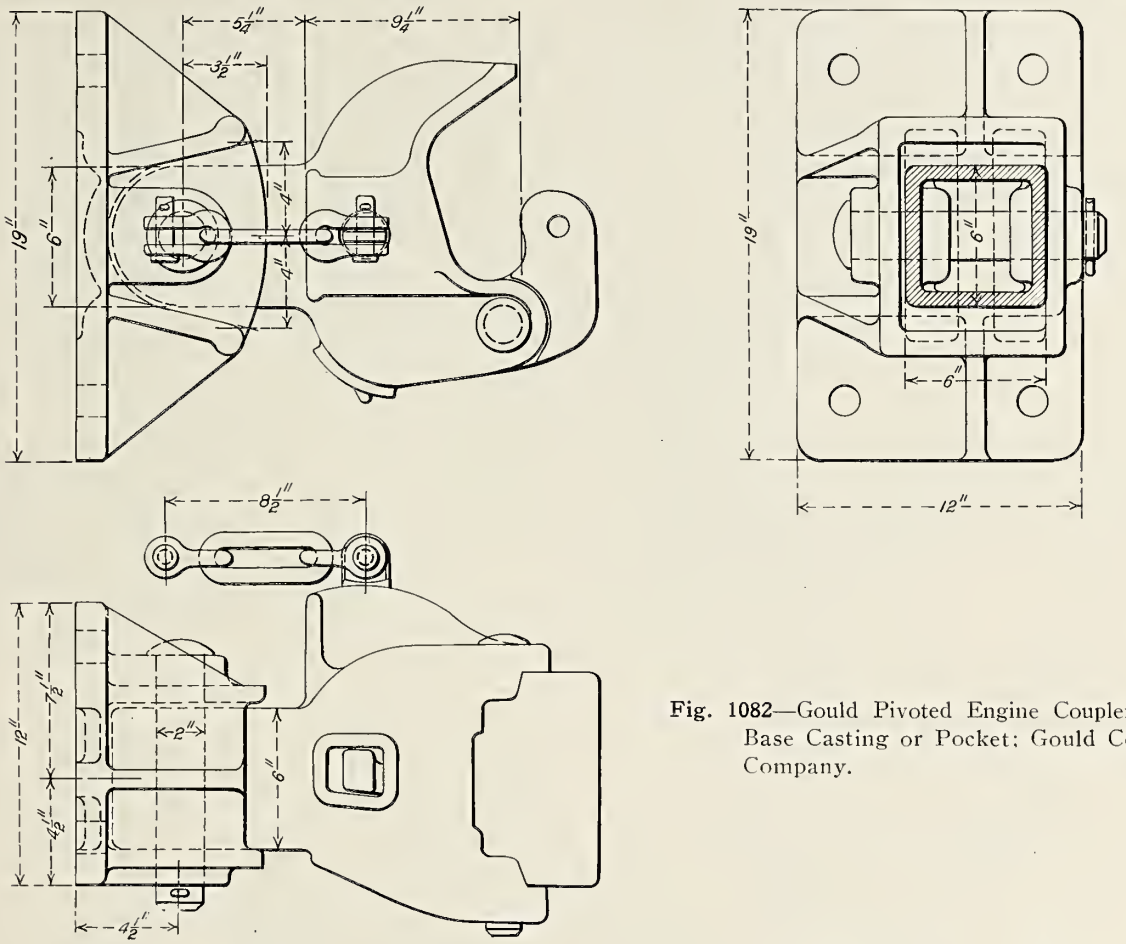

Fig. 1082—Gould Pivoted Engine Coupler with Base Casting or Pocket; Gould Coupler Company.

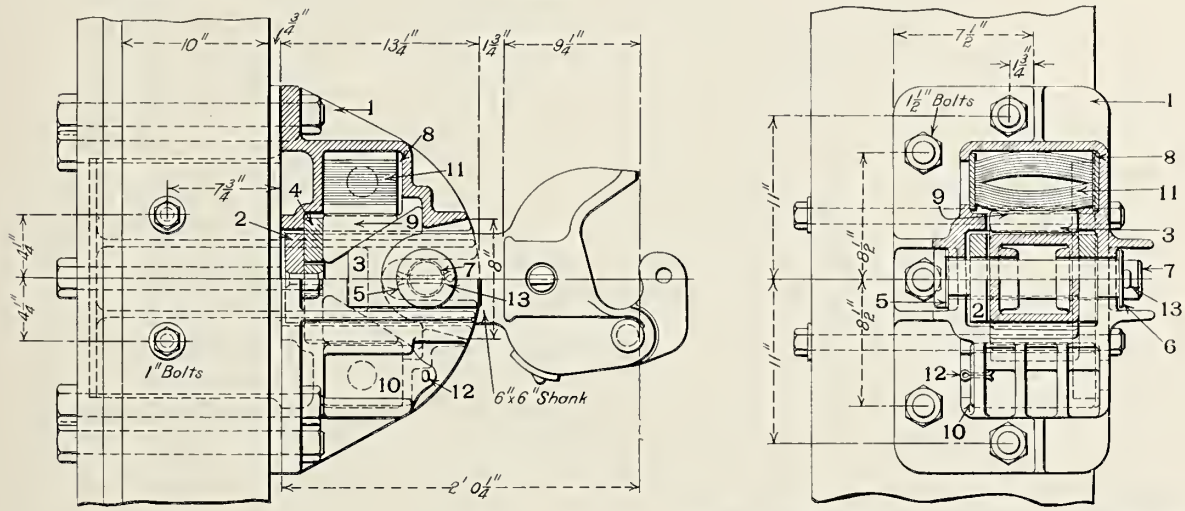

Fig. 1083—Gould Locomotive Friction Draft Gear; Gould Coupler Company.

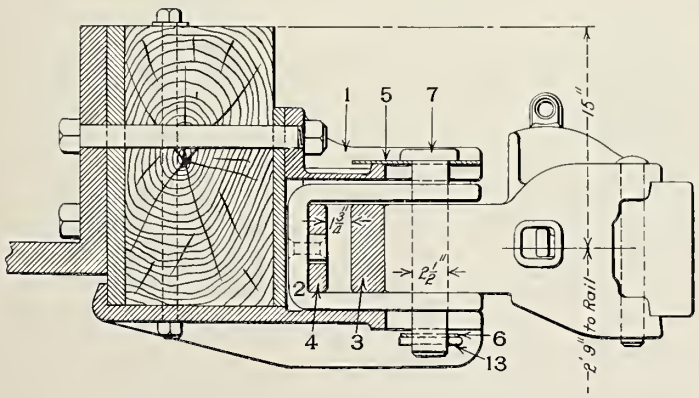

Names of Parts of Fig. 1083.

1 *Housing*
2 *Yoke*
3 *Wedge*
4 *Follower*
5 *Top Washer*
6 *Bottom Washer*
7 *Pivot Pin*
8 *Wear Plates*
9 *Wedge Plates*
10 *Cover Plates*
11 *Leaf Spring*
12 *Cotter*
13 *Pivot Pin Cotter*

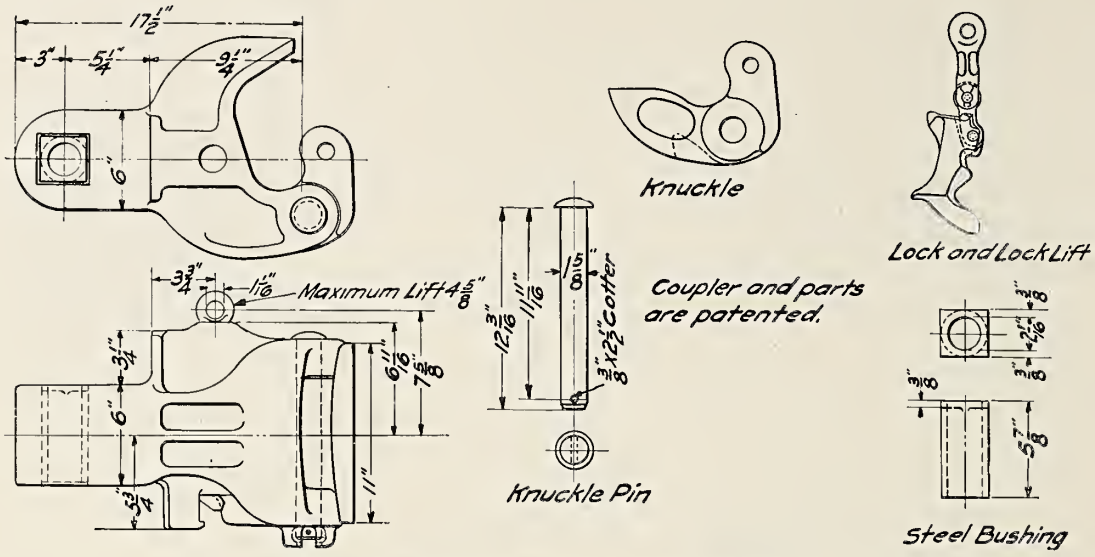

Fig. 1084—The Climax Engine Coupler and Parts.

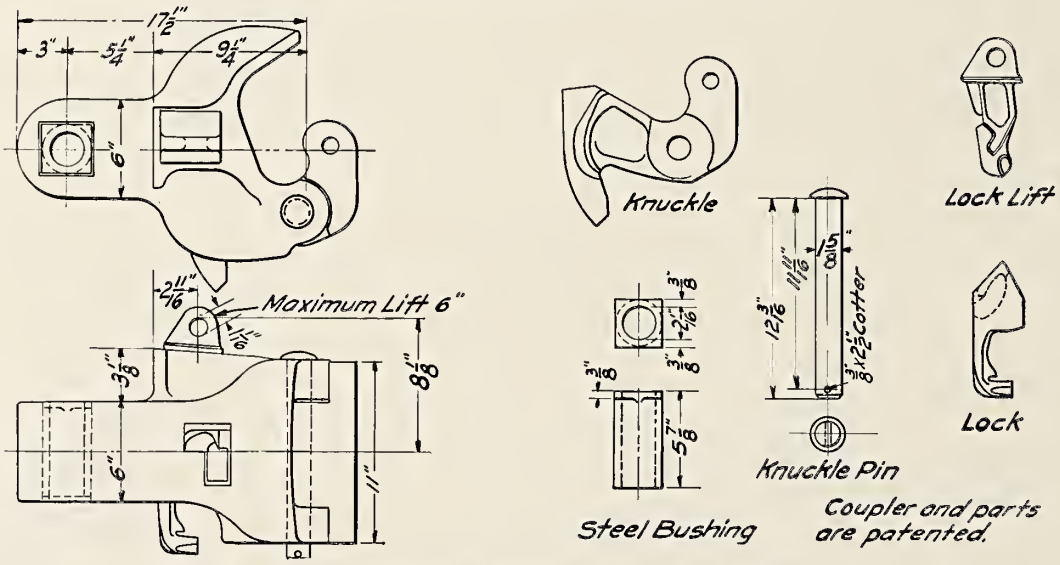

Fig. 1085—The Latrobe Engine Coupler and Parts.

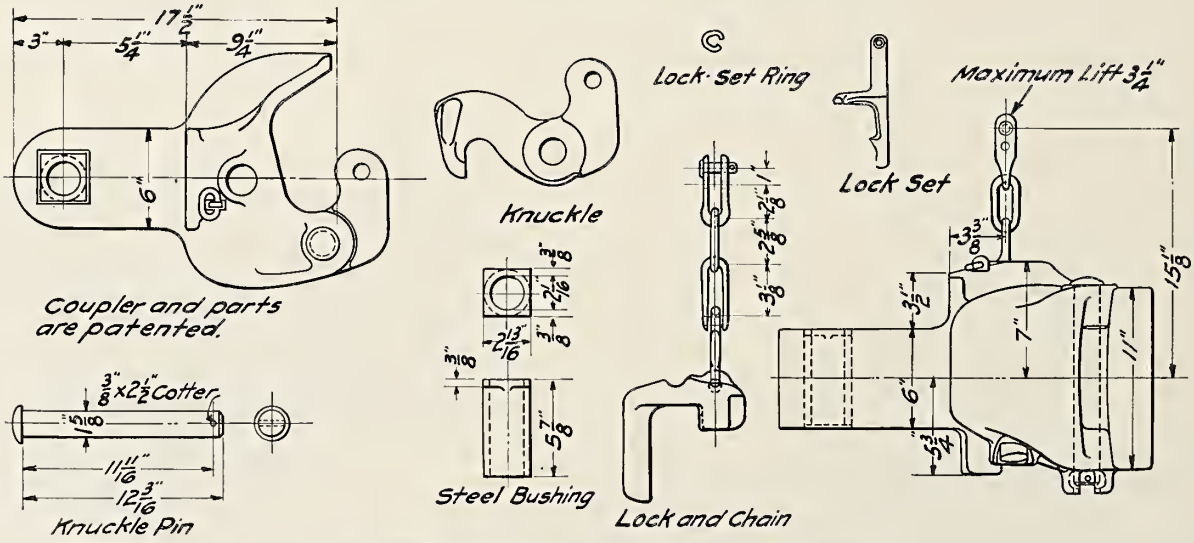

Fig. 1086—The Tower Engine Coupler and Parts.

The National Malleable Castings Company.

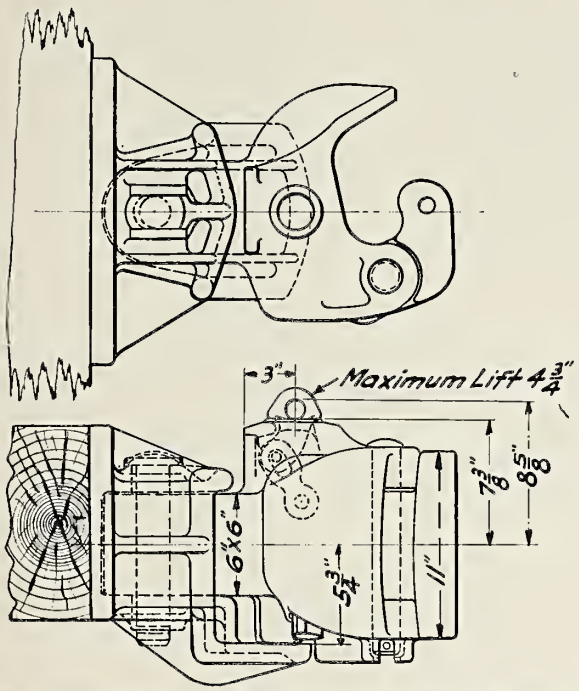

Fig. 1087—The Sharon Engine Coupler and Pocket with Extended Floor.

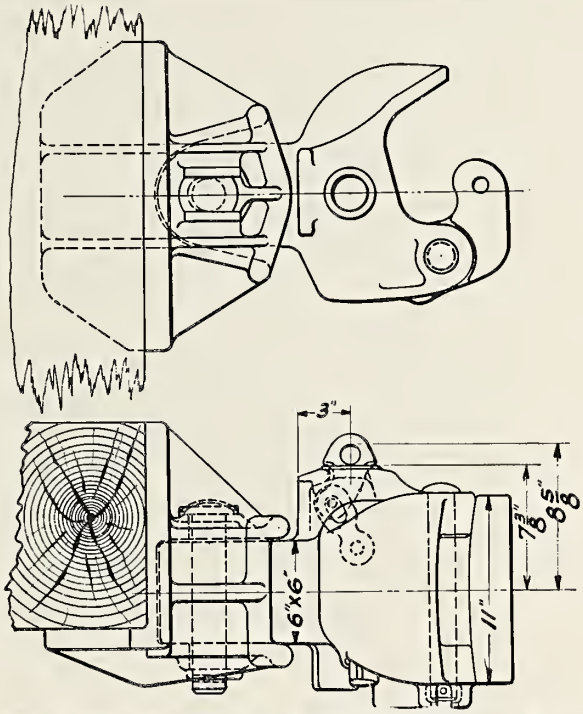

Fig. 1088—The Sharon Engine Coupler and Pocket with Bottom Lip.

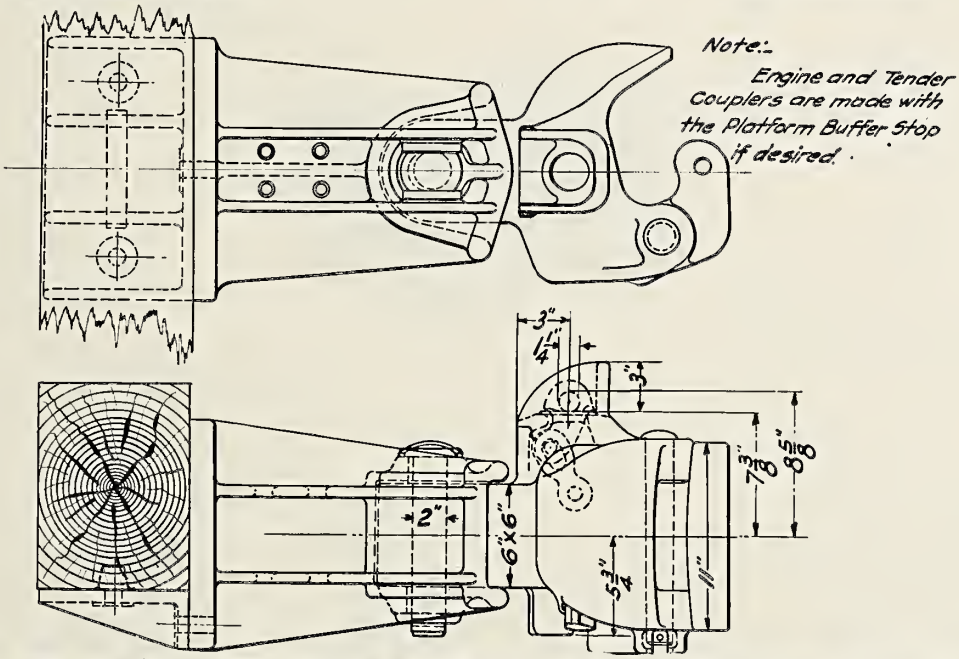

Fig. 1089—The Sharon Pilot Coupler with Platform Buffer and Pocket with Bottom Bracket.

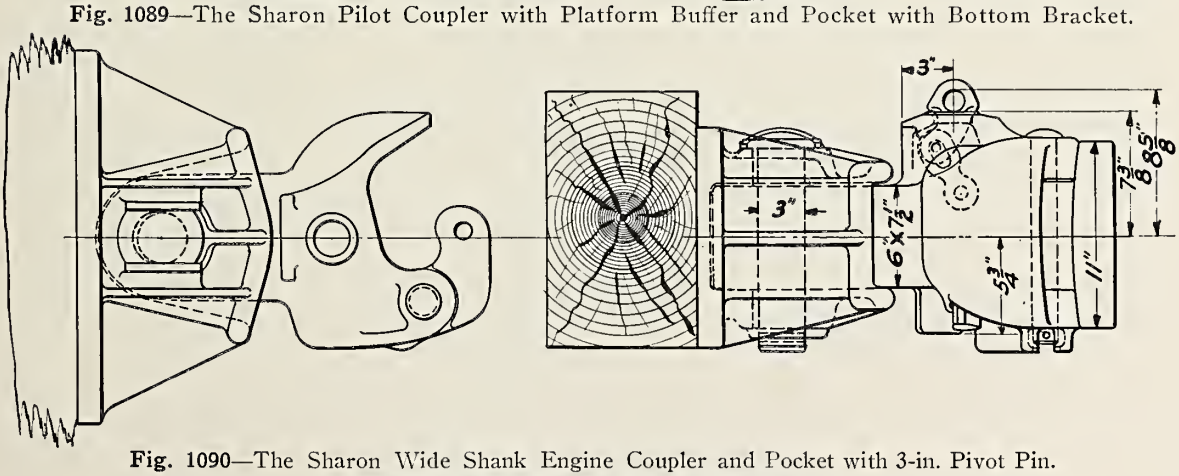

Fig. 1090—The Sharon Wide Shank Engine Coupler and Pocket with 3-in. Pivot Pin.
The National Malleable Castings Company.

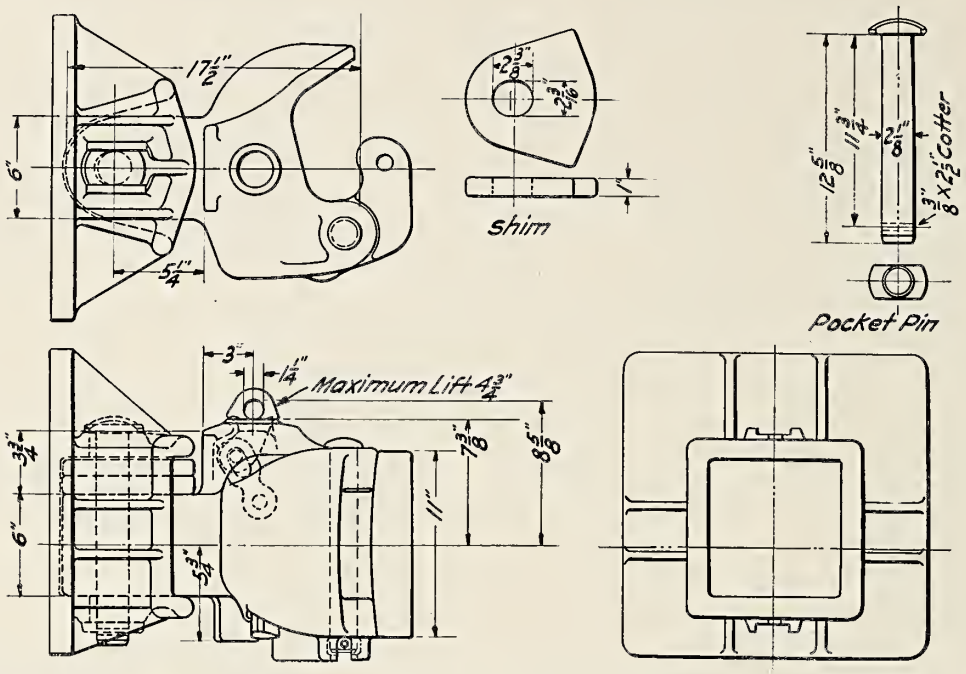

Fig. 1091—The Sharon Engine Coupler and Pocket with Two 1-in. Shims and 2⅛-in. Pocket Pin. Patented.

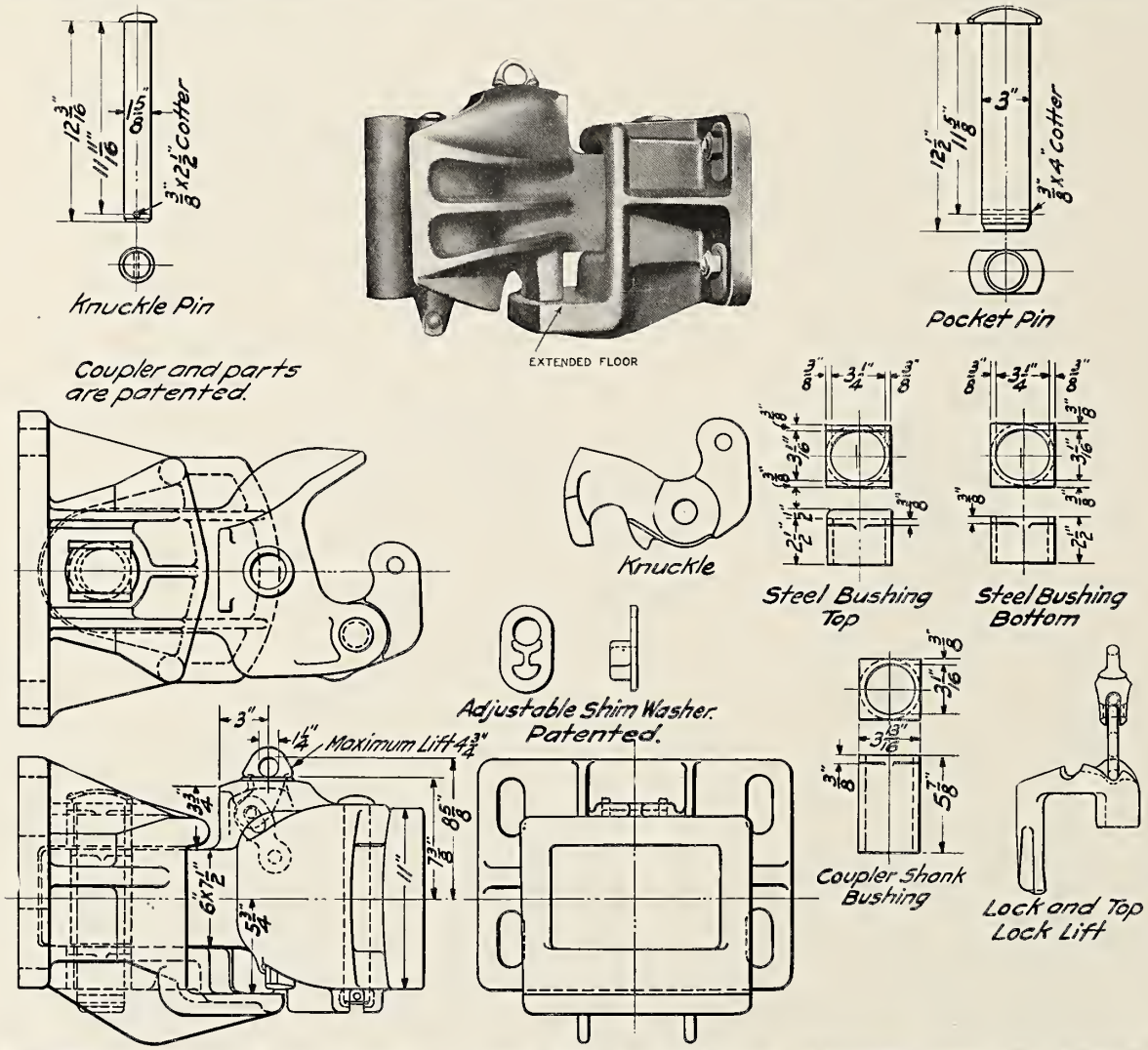

Fig. 1092—The Sharon Engine Coupler and Pocket with Extended Floor, Adjustable Shims and Bushings for 3-in. Pocket Pin. Patented.

The National Malleable Castings Company.

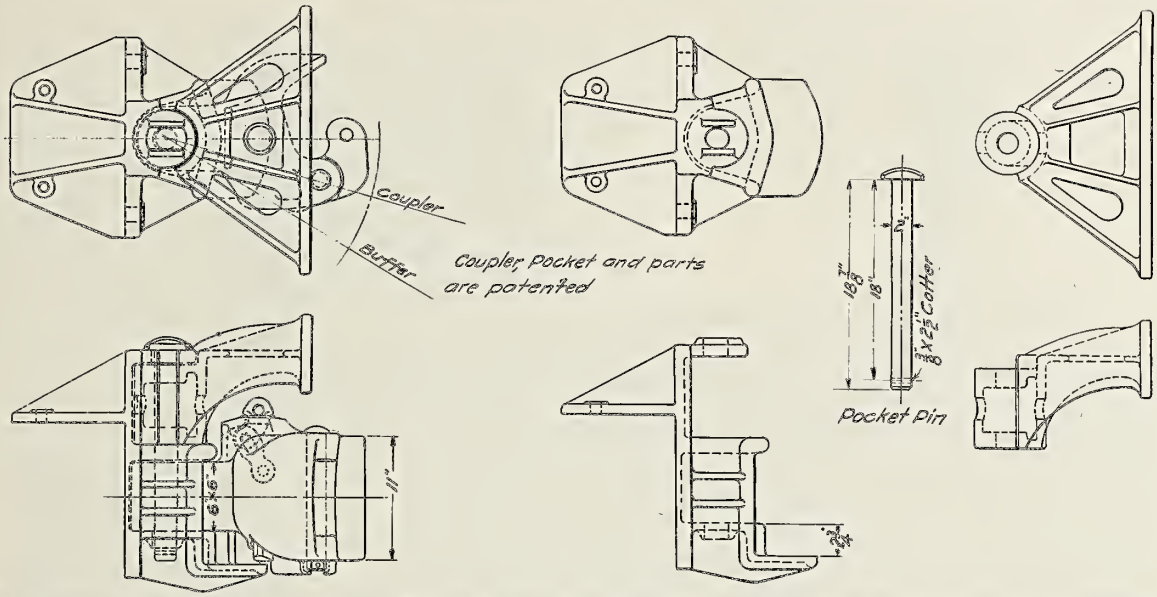

Fig. 1093—The Sharon Engine Coupler Pocket with Extended Floor, Radial Buffer and Top Lip. Patented.

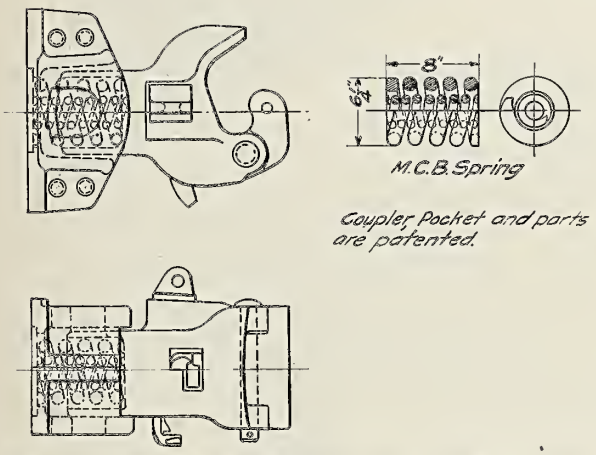

Fig. 1094—The Latrobe Lewis-Seley Engine Coupler and Pocket.

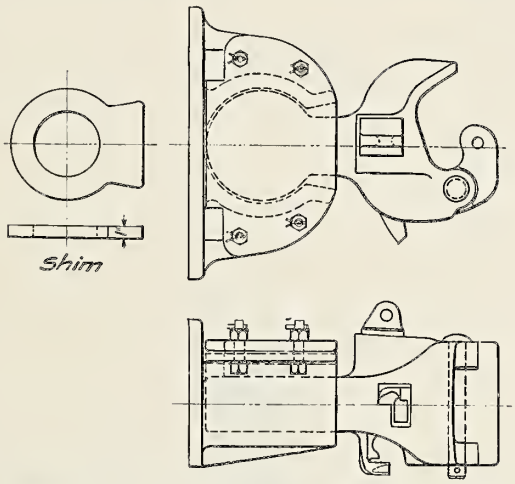

Fig. 1095—The Latrobe Lewis-Kunzer Engine Coupler and Pocket.

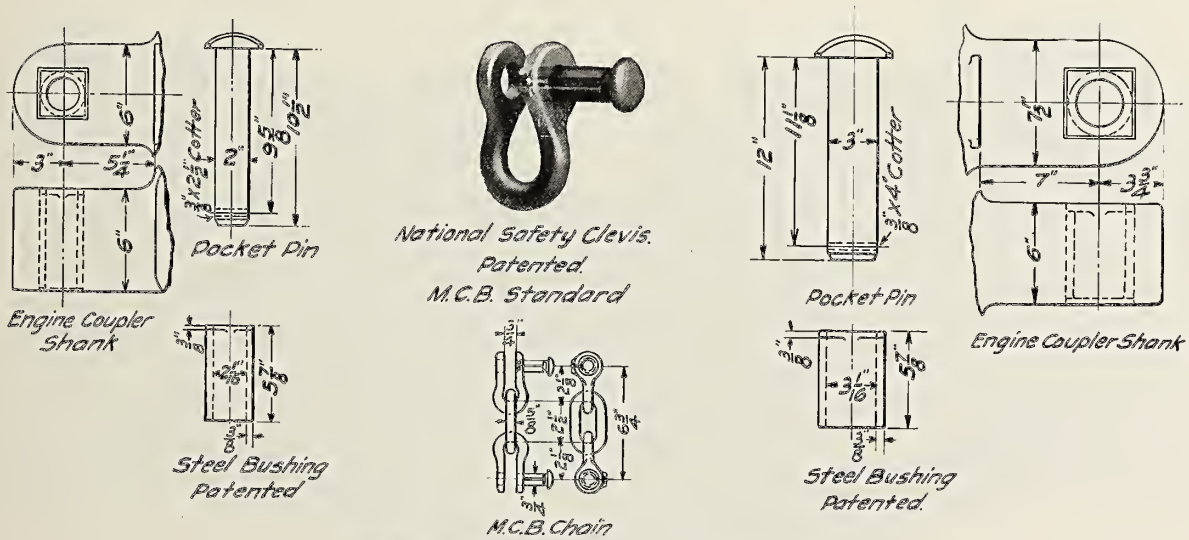

Fig. 1096—Miscellaneous Coupler Parts.

The National Malleable Castings Company.

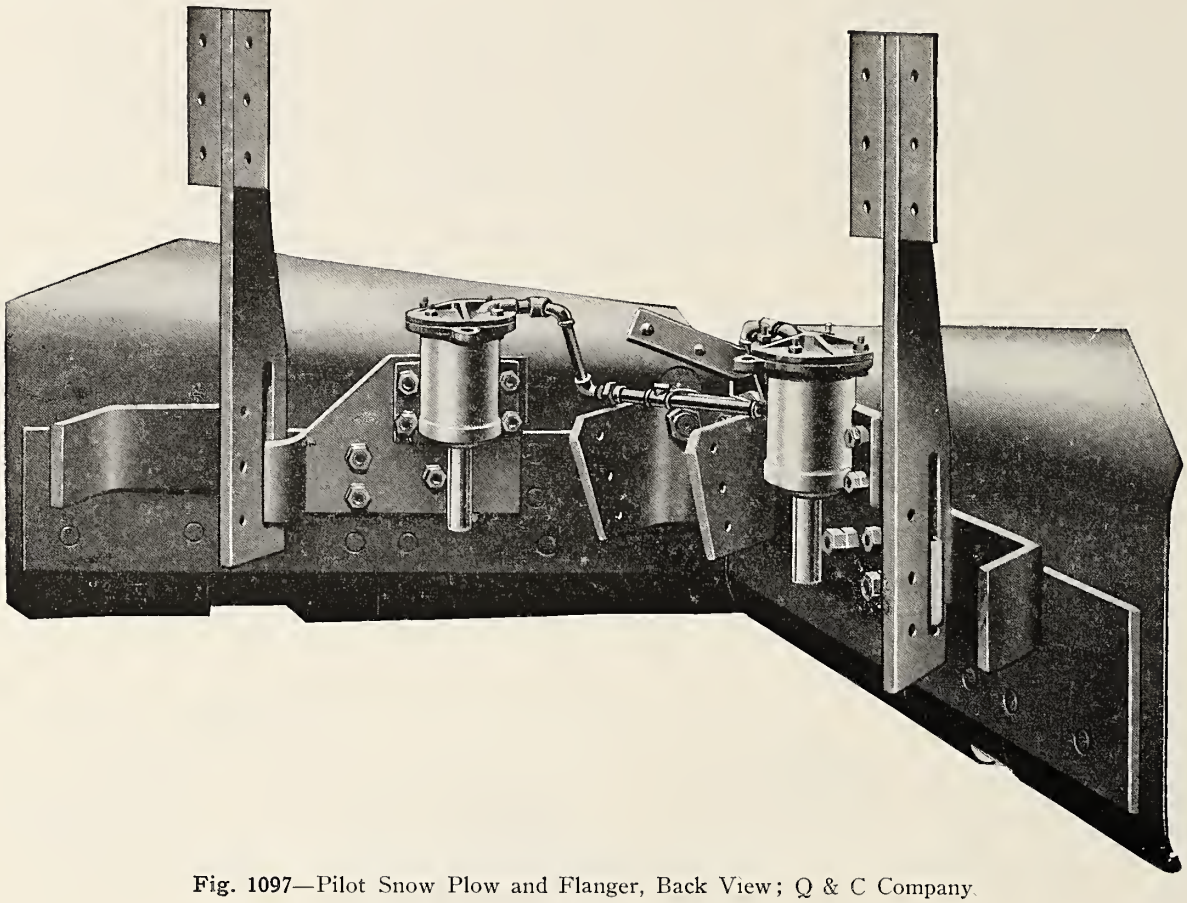

Fig. 1097—Pilot Snow Plow and Flanger, Back View; Q & C Company.

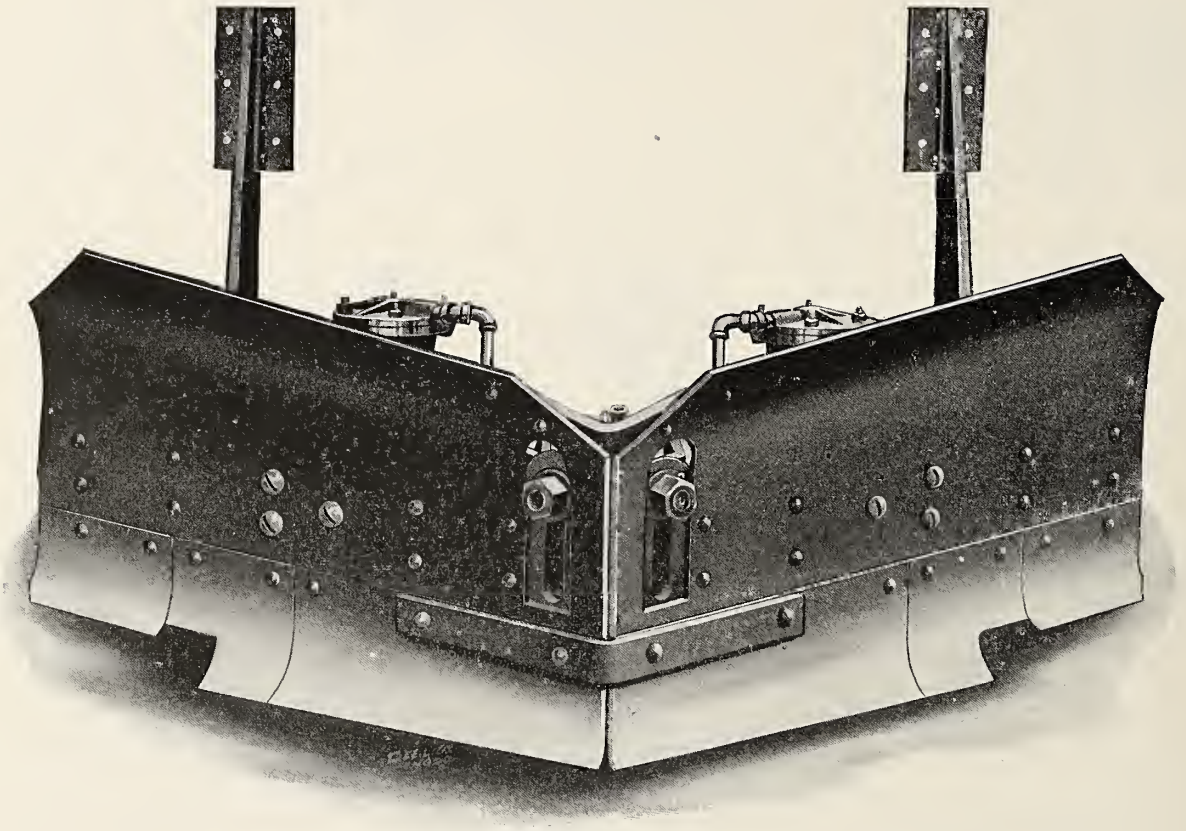

Fig. 1098—Pilot Snow Plow and Flanger, Front View; Q & C Company.

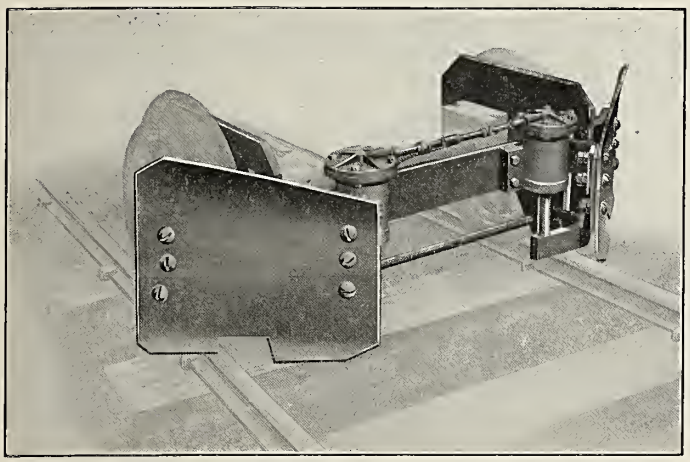

Fig. 1099—Ray Self-Contained Snow Flanger Applied to a Pony Truck. Flanger in Raised Position. Q & C Company.

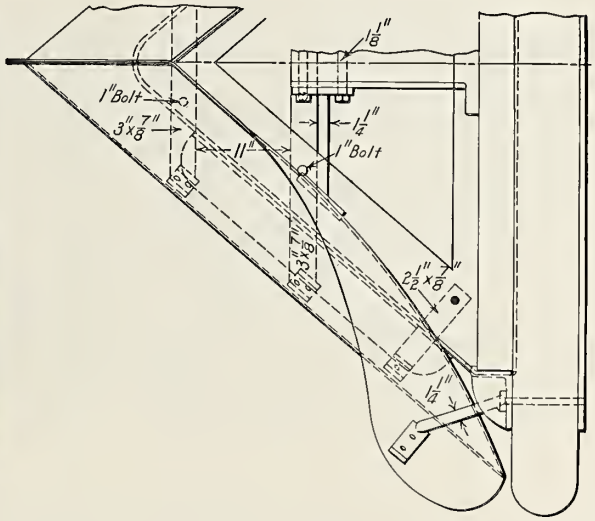

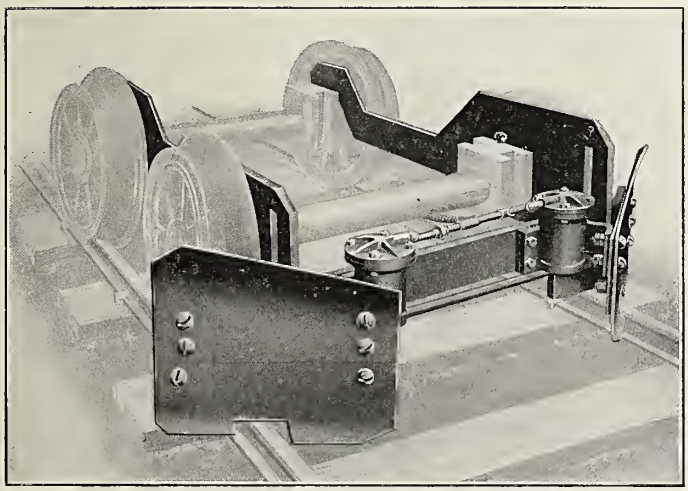

Fig. 1101—Ray Self-Contained Snow Flanger Applied to a Four-Wheel Truck. Flanger in Lowered Position; Q & C Company.

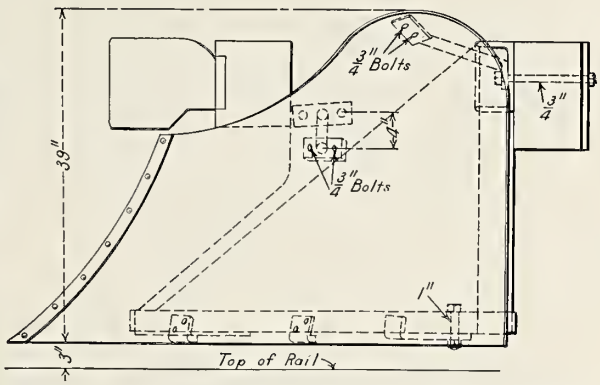

Fig. 1100—Detachable Pilot Snow Plow; Baldwin Locomotive Works.

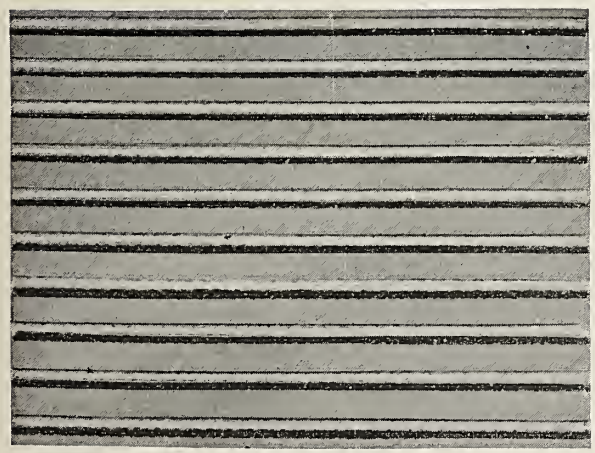

Fig. 1102—Scully Wrought Steel Floor Plate. Ribbed Pattern Used for Running Boards; Scully Steel & Iron Company.

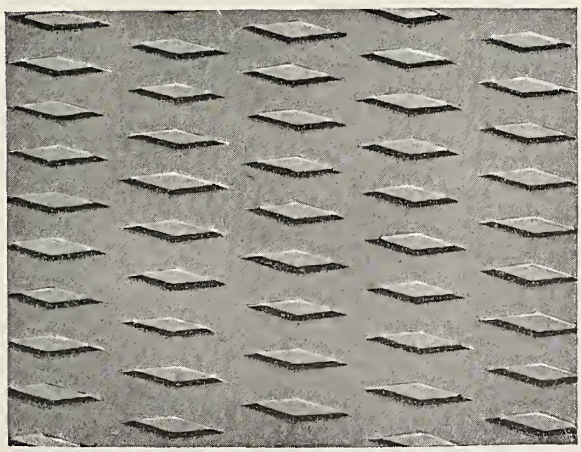

Fig. 1103—Scully Wrought Steel Floor Plate. Diamond Pattern Used for Running Boards; Scully Steel & Iron Company.

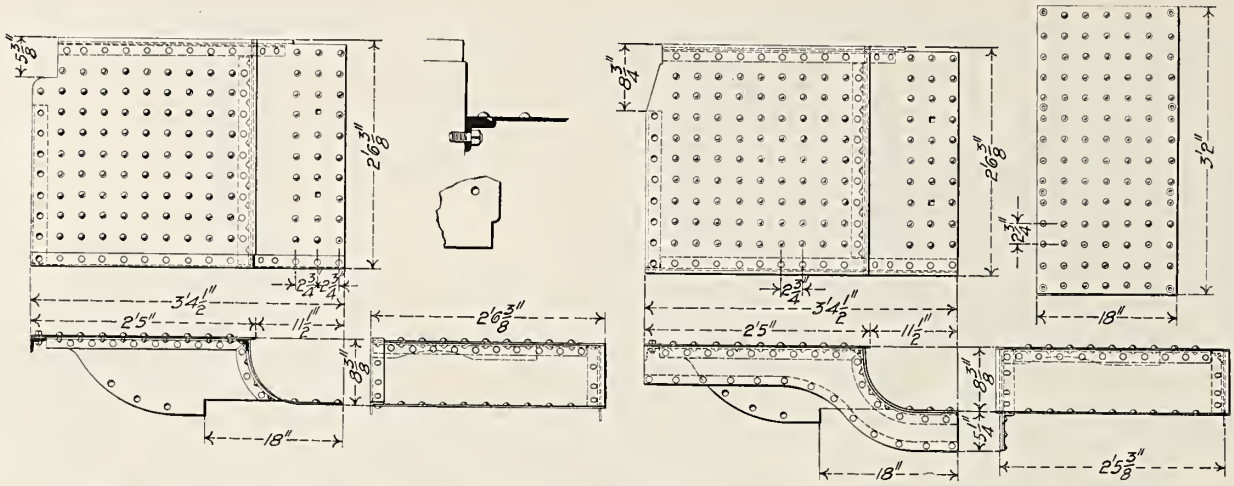

Fig. 1104—Details of Front Platform for Atlantic Type (4-4-2) Locomotive; Pennsylvania Railroad.

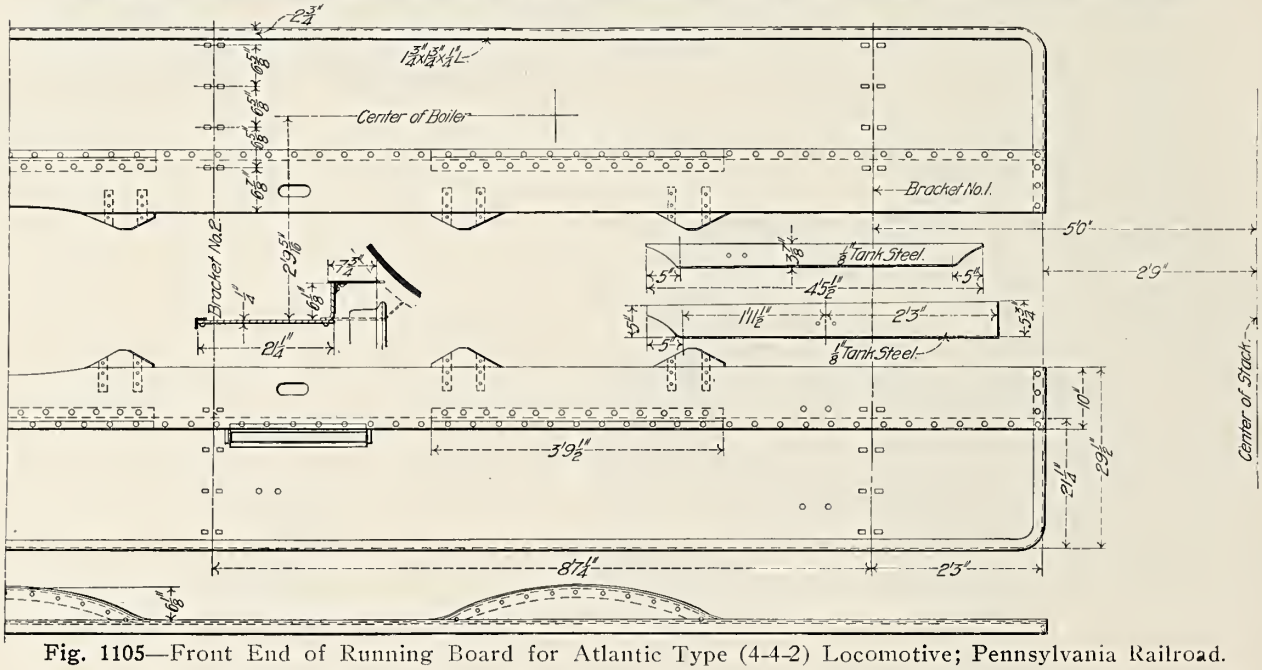

Fig. 1105—Front End of Running Board for Atlantic Type (4-4-2) Locomotive; Pennsylvania Railroad.

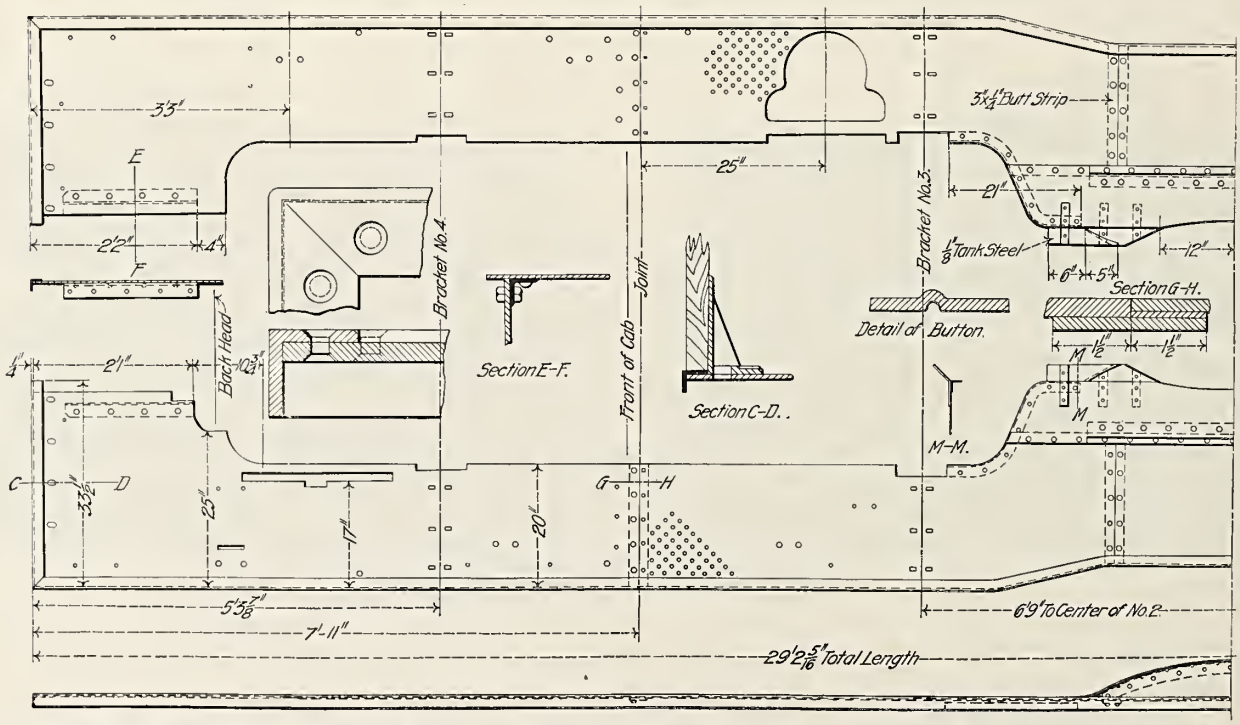

Fig. 1106—Rear End of Running Board for Atlantic Type (4-4-2) Locomotive; Pennsylvania Railroad.

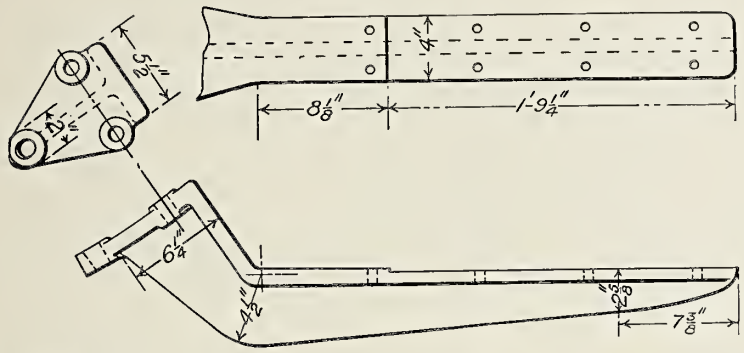

Fig. 1107—Running Board Bracket for Atlantic Type (4-4-2) Locomotive; Pennsylvania Railroad.

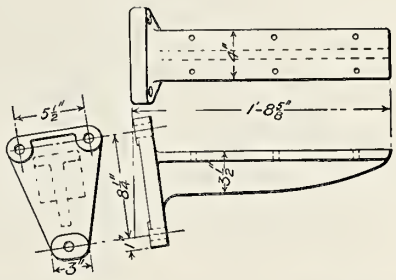

Fig. 1108—Running Board Bracket for Atlantic Type (4-4-2) Locomotive; Pennsylvania Railroad.

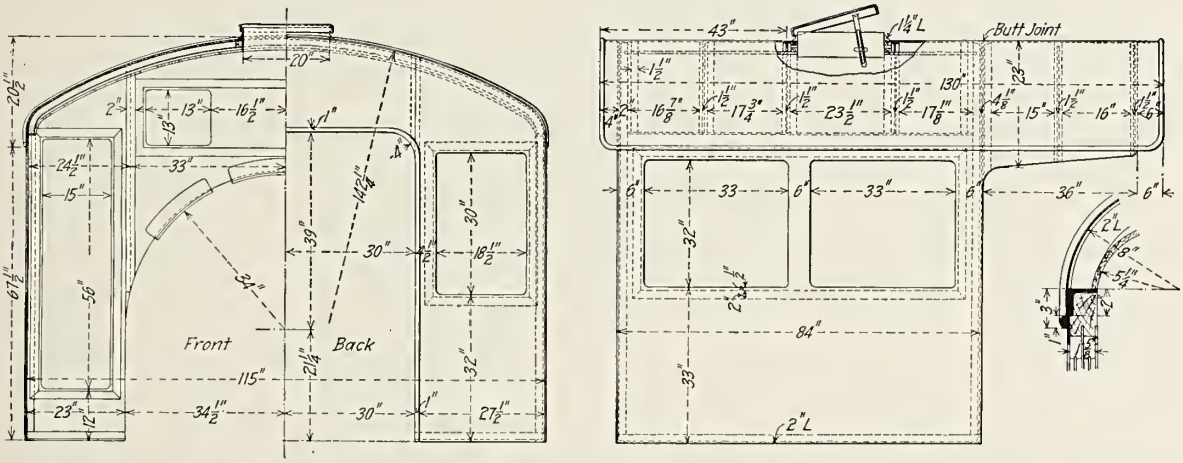

Fig. 1109—Steel Cab for Ten-Wheel (4-6-0) Locomotive. Built for the Norfolk Southern by the Baldwin Locomotive Works.

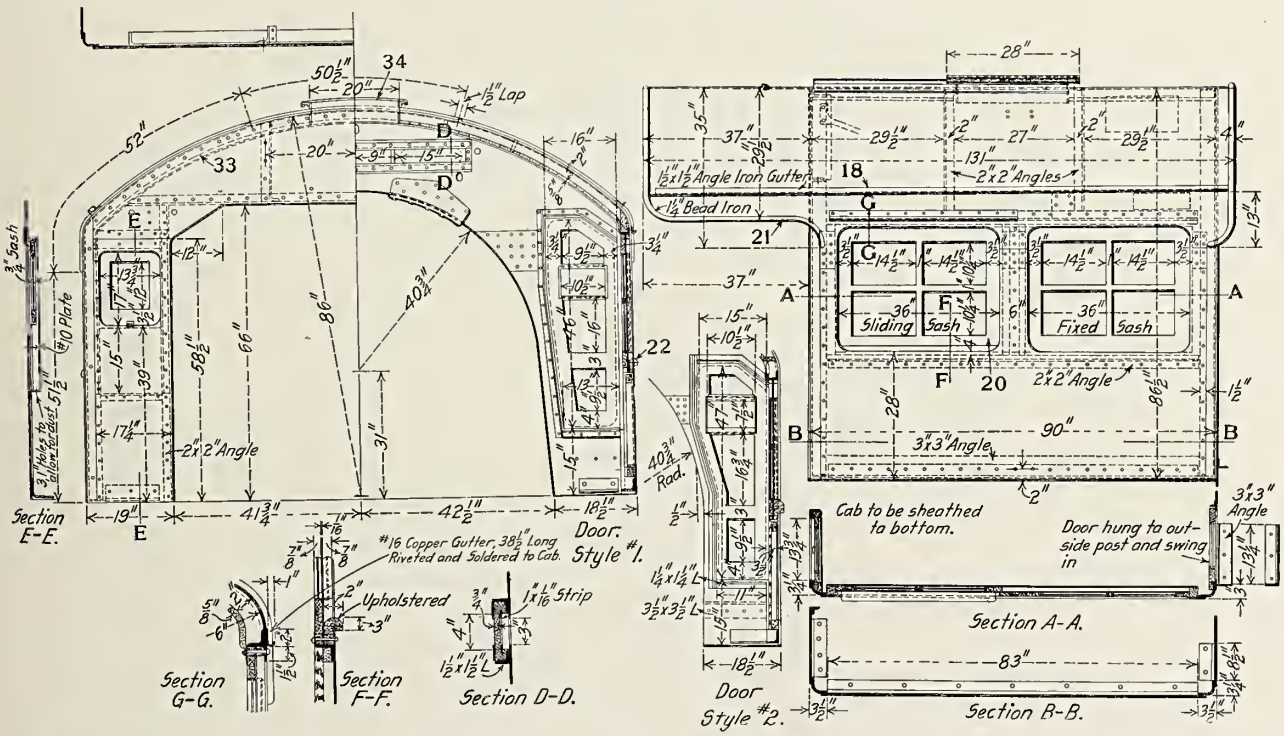

Fig. 1110—Steel Cab for Pacific Type (4-6-2) Locomotive. Built for the New York Central by the American Locomotive Company.

Numbers Refer to Names of Parts on Page 505.

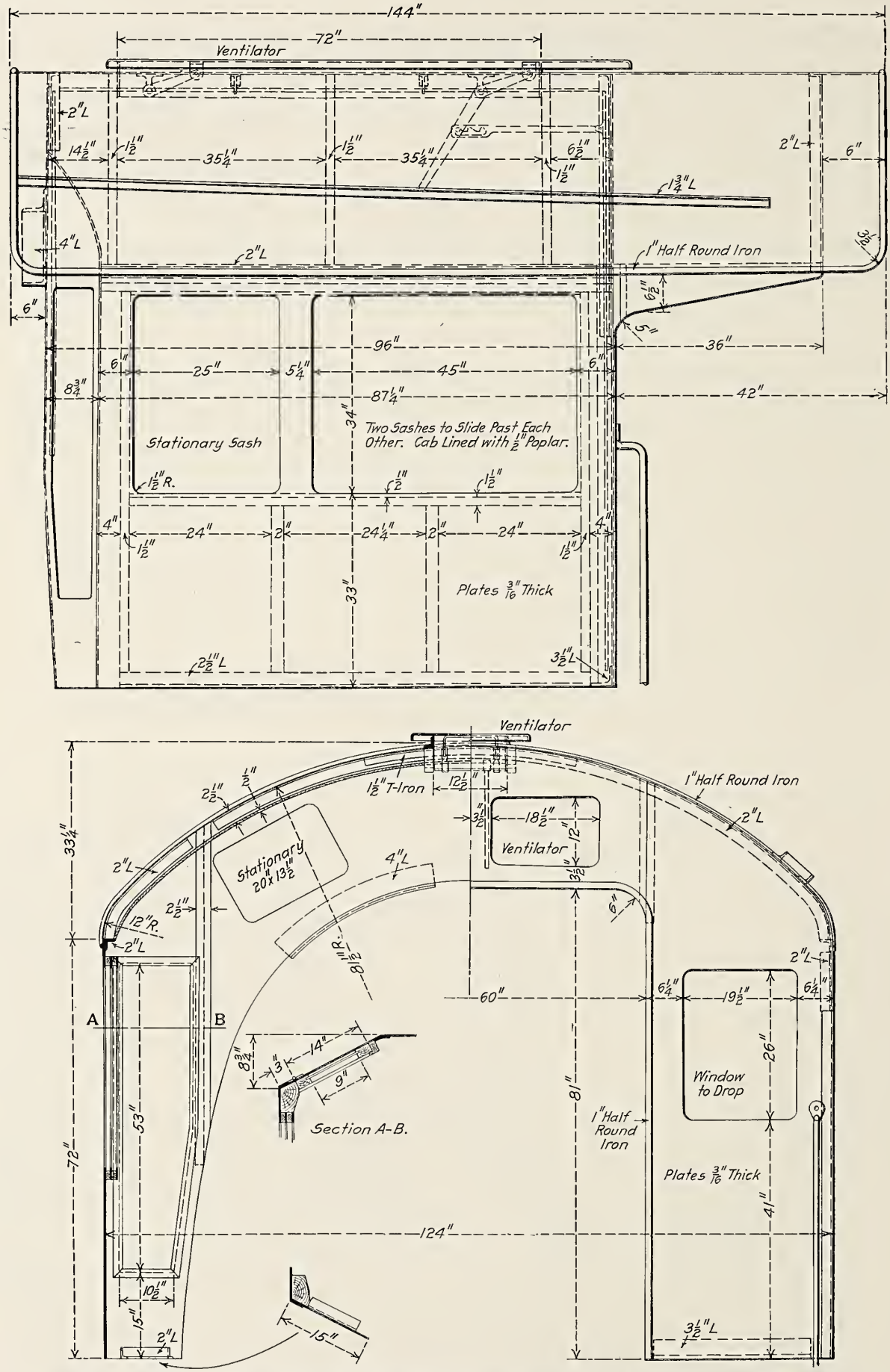

Fig. 1111—Steel Cab with Rushton Ventilator for Wide Firebox; Baldwin Locomotive Works.

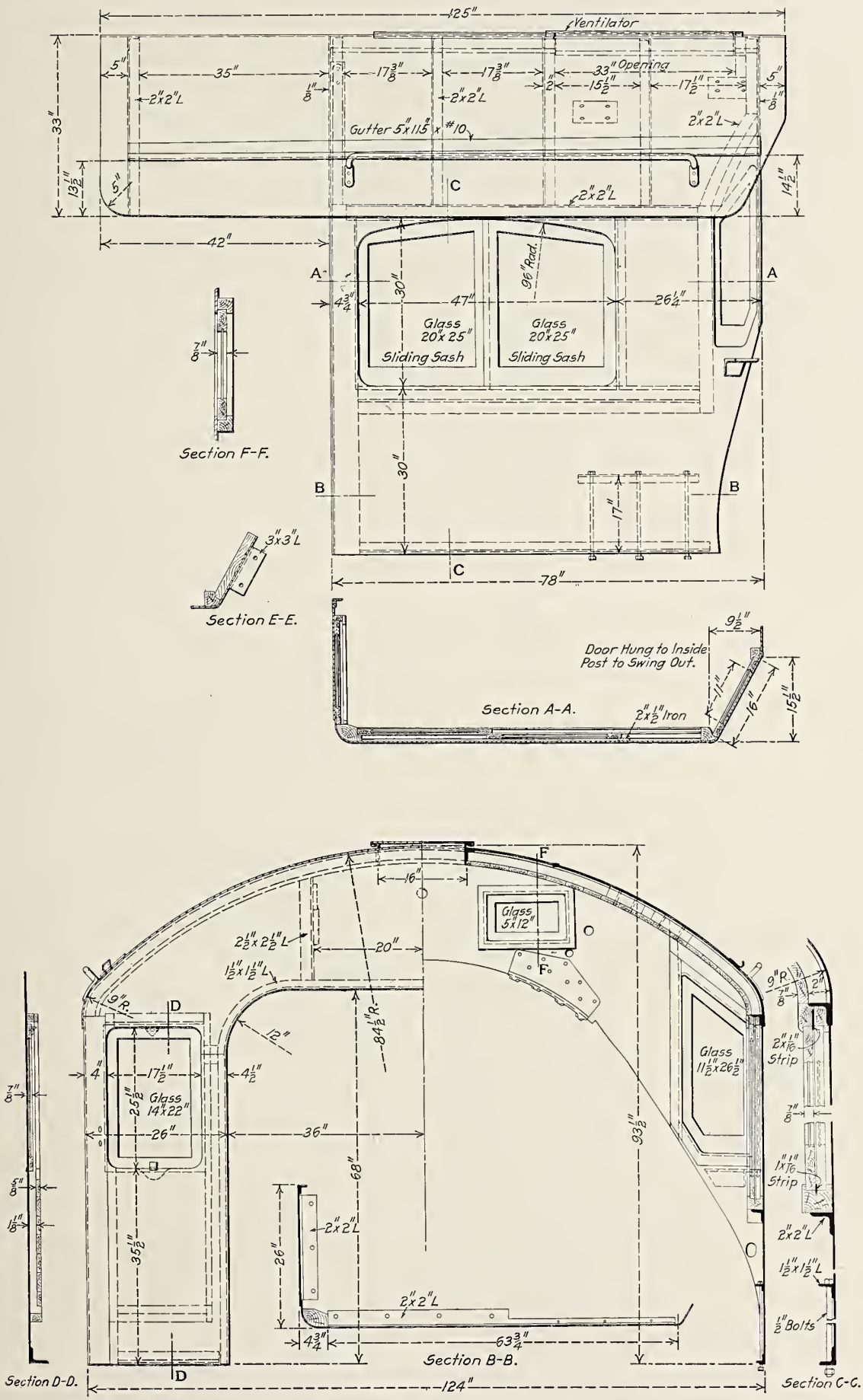

Fig. 1112—Steel Cab for Wootten Firebox; American Locomotive Company.

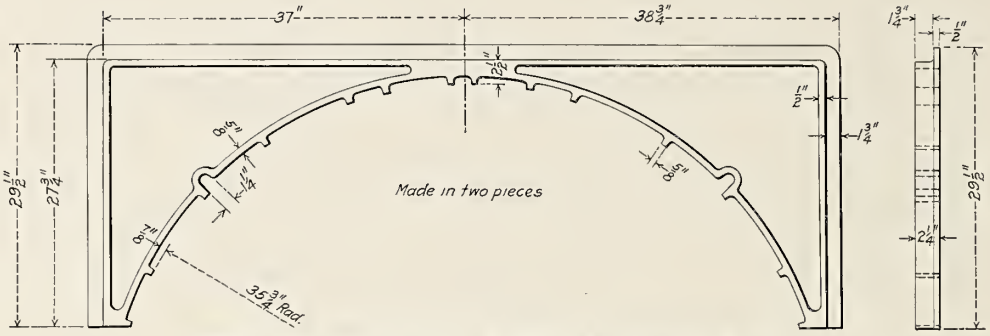

Fig. 1113—Cab Saddle; Baldwin Locomotive Works.

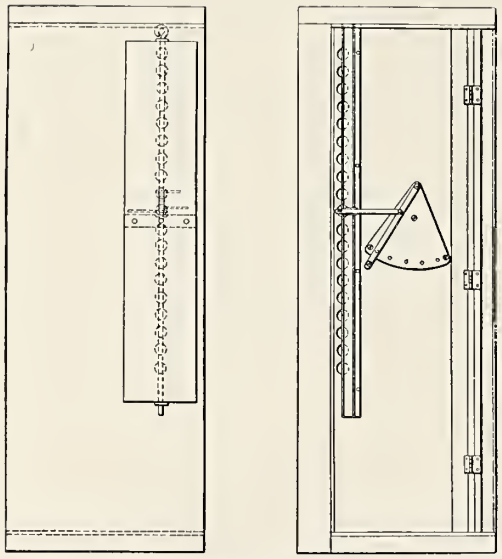

Fig. 1114—Cab Window Ventilator; C. M. Goodrich.

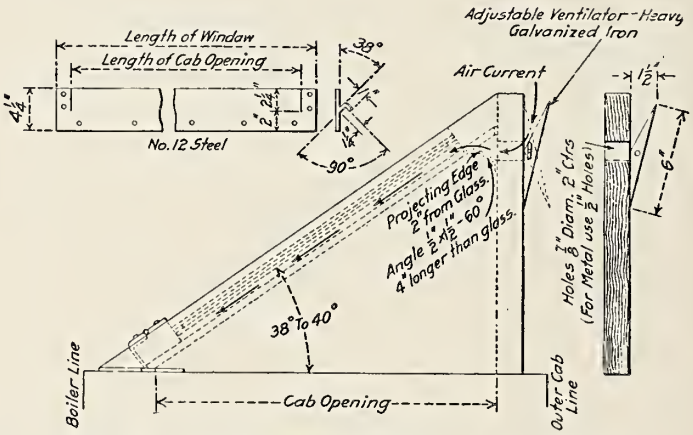

Fig. 1115—Application of Ventilator to Cab Window; C. M. Goodrich.

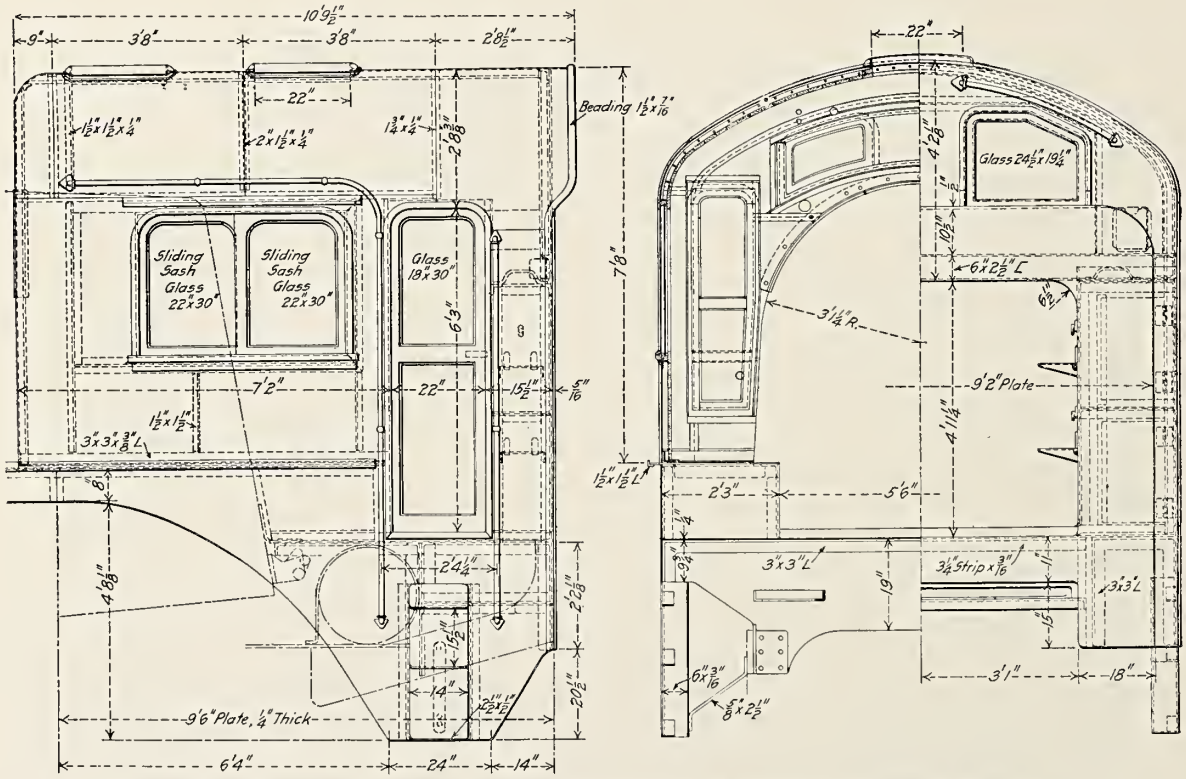

Fig. 1116—Vestibule Cab for Pacific Type (4-6-2) Locomotive; Canadian Pacific.

Names of Parts of Cabs, Figs. 1110-1143.

1 *Seat*
2 *Back Window*
3 *Foot Board*
4 *Window Post*
5 *Back Door*
6 *Back Door Rail*
7 *Back Door Roller*
8 *Handrail*
9 *Top Cab Bracket*
10 *Back Door Protection Plate*
11 *Door Hand Rail*
12 *Hand Rail Column*
13 *Door Guides*
14 *Door Handle*
15 *Back Sheet*
16 *Door Rail Bracket*
17 *Door Wheel Axle*
18 *Water Gutter Eaves*
20 *Window Sash*
21 *Rear Overhang*
22 *Arm Rest*
24 *Window Stile*
33 *Roof Carline*
34 *Ventilator*

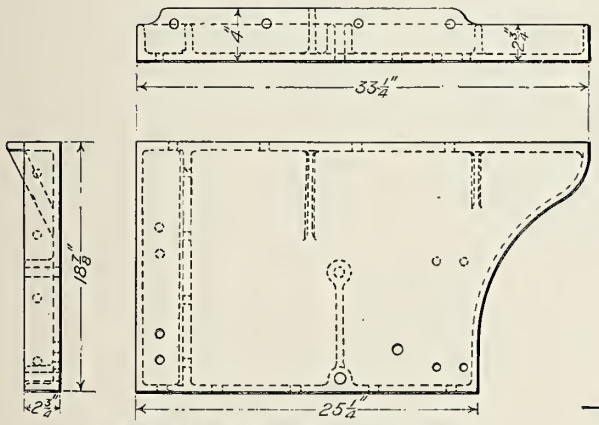

Fig. 1117—Top Cab Bracket.

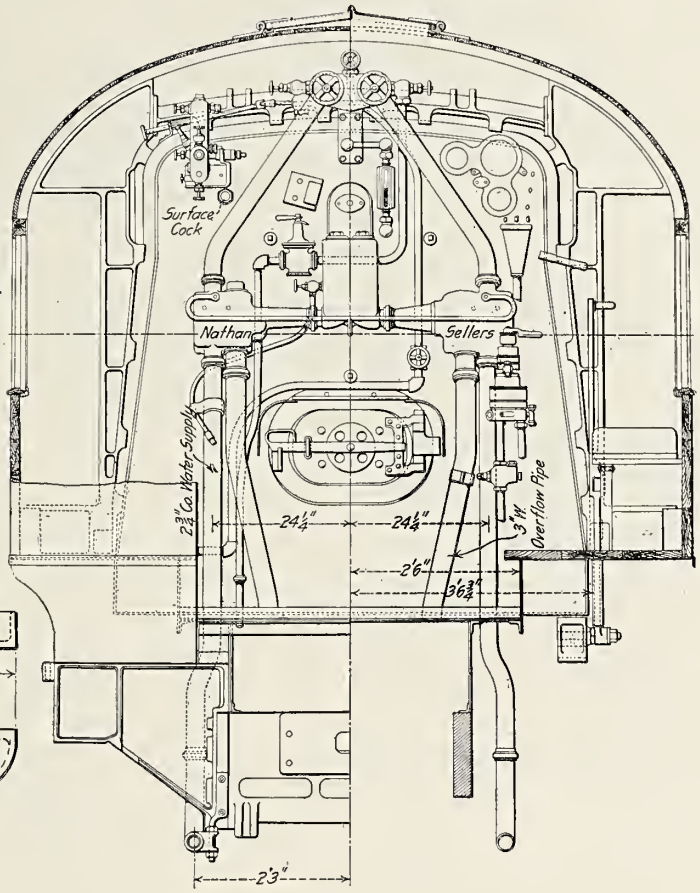

Fig. 1118—General Arrangement of Cab.

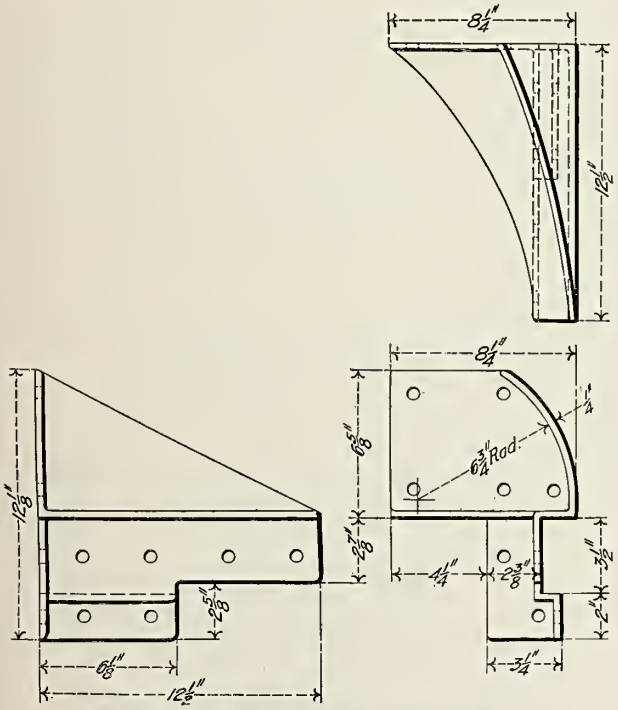

Fig. 1119—Top Corner Cab Bracket.

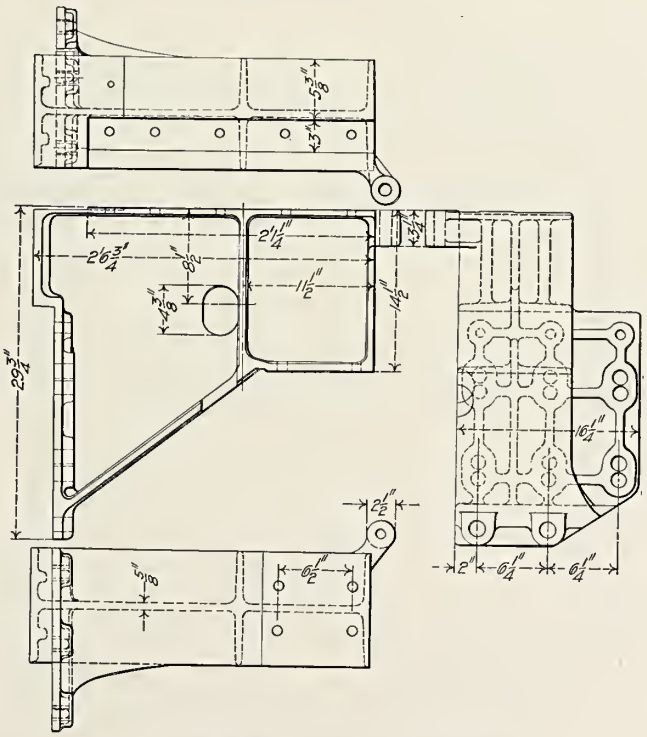

Fig 1120—Lower Cab Bracket.

Figs. 1117-1120 are Details of Cab for Atlantic Type (4-4-2) Locomotive; Pennsylvania Railroad.

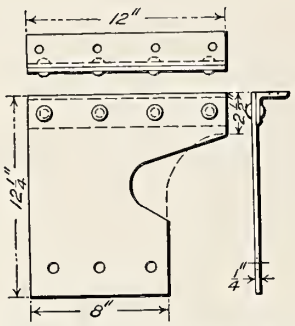

Fig. 1121—Rear Cab Side Sheet.

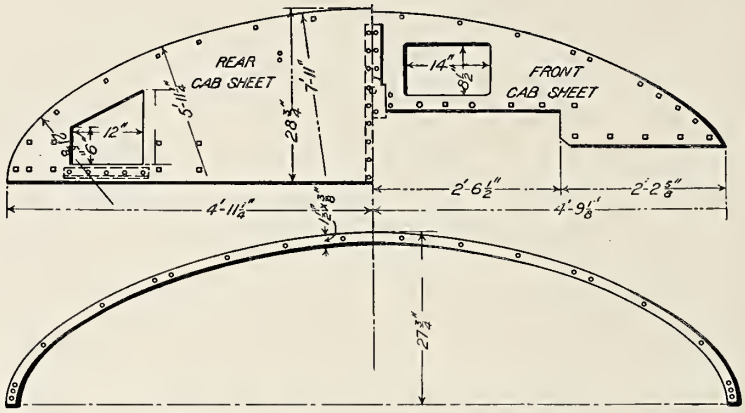

Fig. 1122—Front and Rear Cab Sheets.

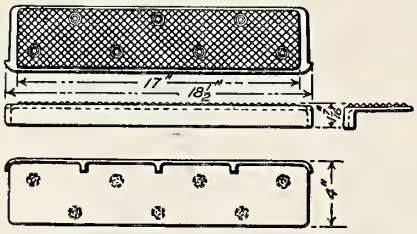

Fig. 1123—Cab Threshold Plate.

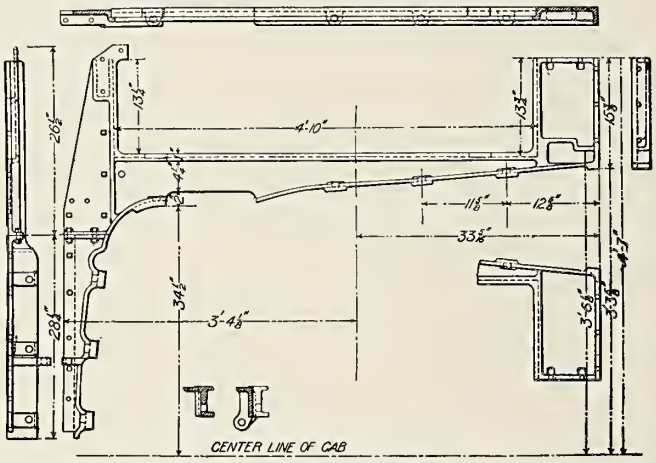

Fig. 1125—Cab Saddle.

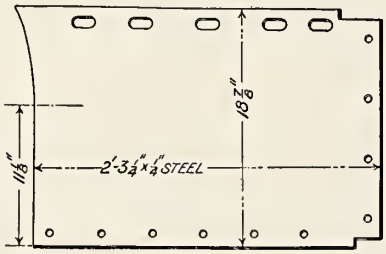

Fig. 1124—Cab Side Sheet.

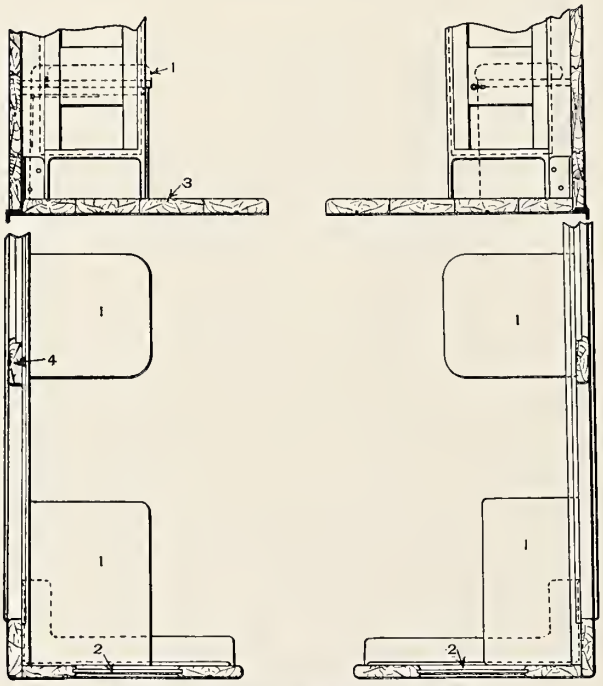

Fig. 1126—Location of Seats in Cab.

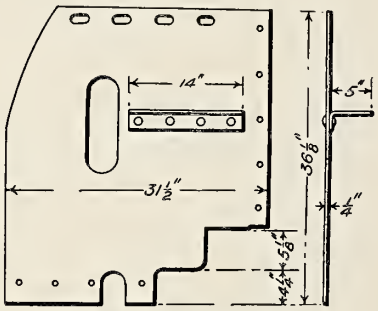

Fig. 1127—Cab Seat.

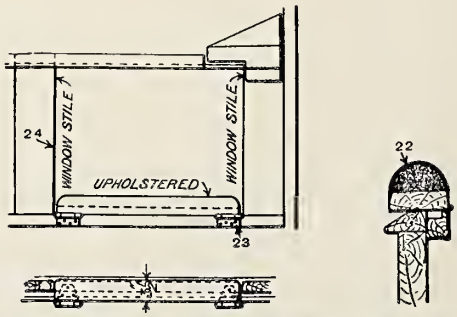

Fig. 1128—Application of Hinged Arm Rest to Window.

Figs. 1121-1128 are Details of Cab for Atlantic Type (4-4-2) Locomotive; Pennsylvania Railroad.

Numbers Refer to Names of Parts on Page 505.

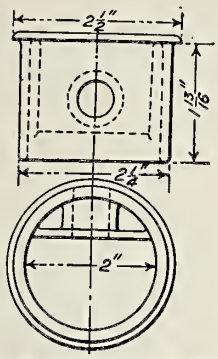

Fig. 1129—Joint Bolt Washer.

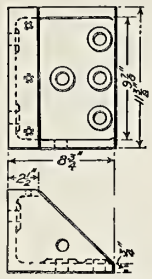

Fig. 1130—Rear End Sill Top Corner Casting.

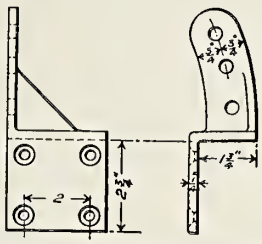

Fig. 1131—Roof Carline Foot.

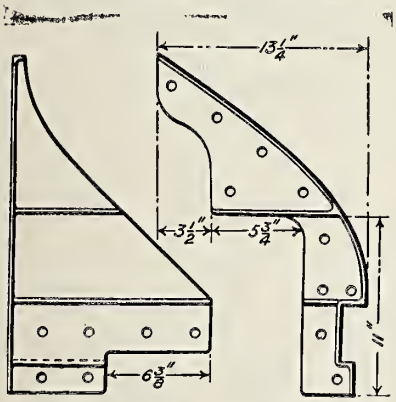

Fig. 1132—Top Corner Cab Bracket.

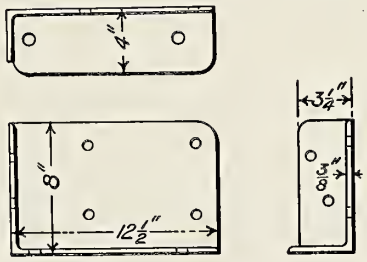

Fig 1133—Bottom Corner Cab Bracket.

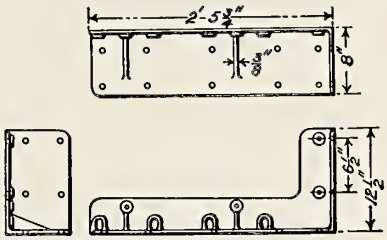

Fig 1134—Rear Lower Corner Cab Bracket.

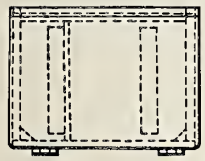

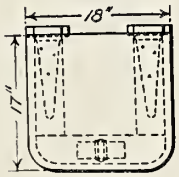

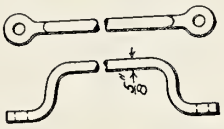

Fig. 1137—Hand Hold.

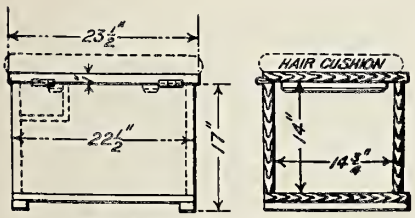

Fig. 1135—Box Seat.

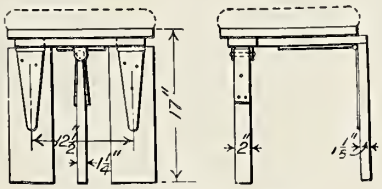

Fig. 1136—Drop Seat.

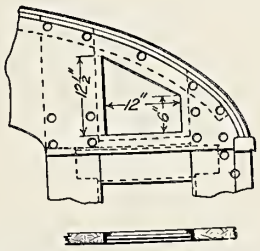

Fig. 1138—Rear Cab Window.

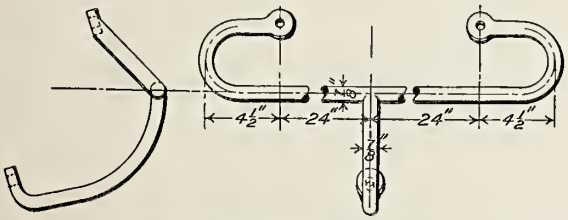

Fig. 1139—Cab Hand Rail.

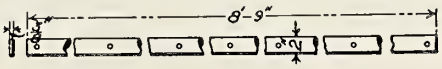

Fig. 1140—Rail for Back Door of Cab.

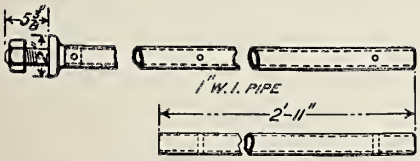

Fig. 1141—Cab Hand Rail.

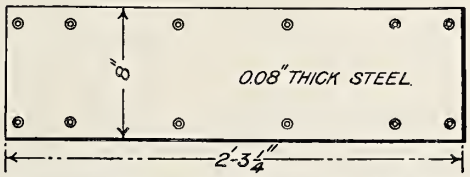

Fig. 1142—Protection Plate for Bottom of Cab Back Door.

Figs. 1129-1142 are Details of Cab for Atlantic Type (4-4-2) Locomotive; Pennsylvania Railroad.

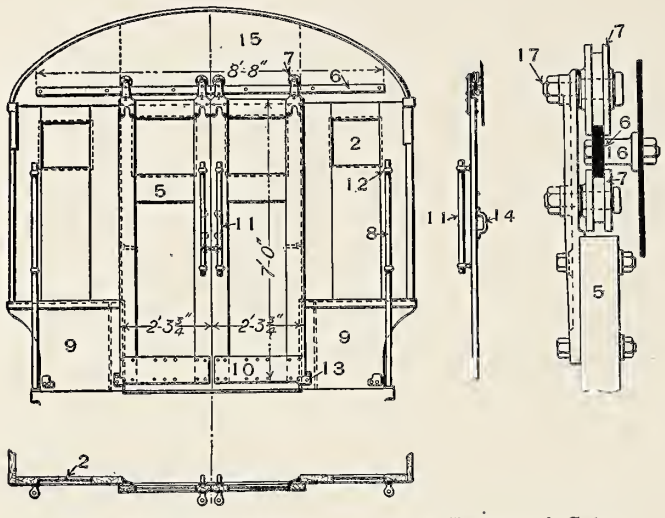

Fig 1143—Arrangement of Back Doors of Cab.

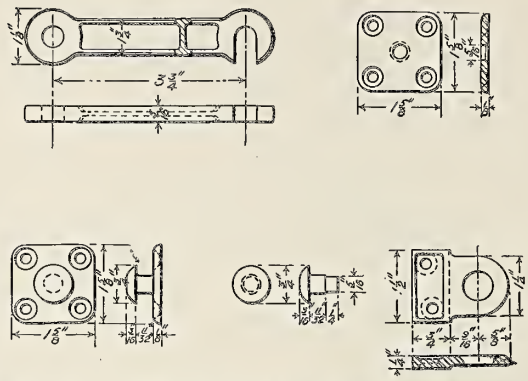

Fig. 1144—Dog, Hasp and Seal Plate for Doors and Drawers.

Numbers on Fig. 1143 Refer to Names of Parts on Page 505.

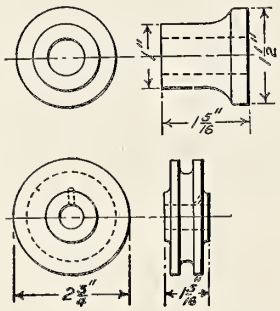

Fig. 1145—Back Door Sheave.

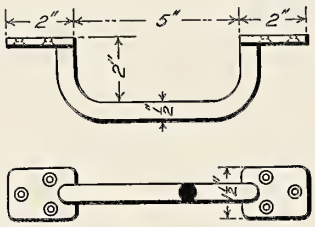

Fig. 1146—Back Door Handle.

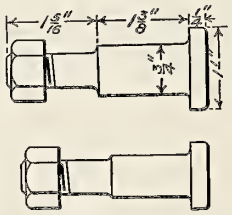

Fig. 1147—Back Door Sheave Axle.

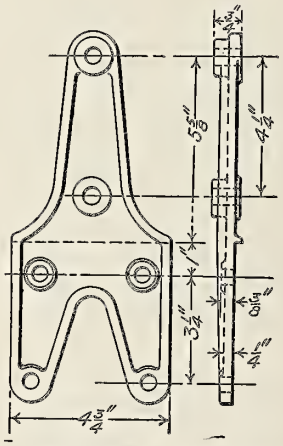

Fig. 1148—Back Door Hanger.

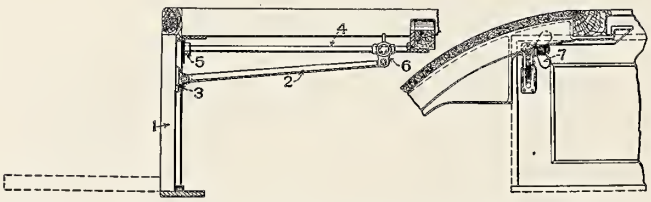

Fig. 1149—Arrangement of Operating Device for Cab Front Door, Opening Outward.

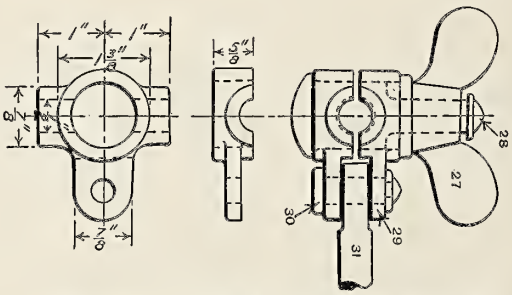

Fig 1150—Clamp for Ventilator and Cab Front Door.

Fig. 1151—Connecting Rod for Operating Device.

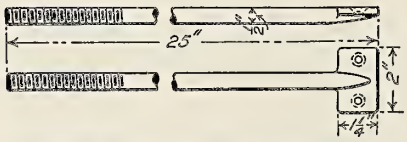

Fig. 1152—Guide for Operating Device.

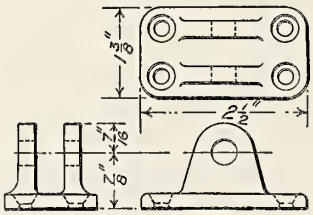

Fig. 1153—Fulcrum for Operating Device.

Names of Parts of Figs. 1149-1150.

1	*Door*	7	*Slide Thumb Screw*
2	*Door Rod*	27	*Thumb Screw*
3	*Door Rod Bracket*	28	*Thumb Screw Stem*
4	*Guide*	29	*Thumb Screw Clamp*
5	*Guide Bracket*	30	*Pin for Connecting Rod*
6	*Slide*	31	*Connecting Rod*

Figs. 1143-1153 are Details of Cab Doors for Atlantic Type (4-4-2) Locomotive; Pennsylvania Railroad.

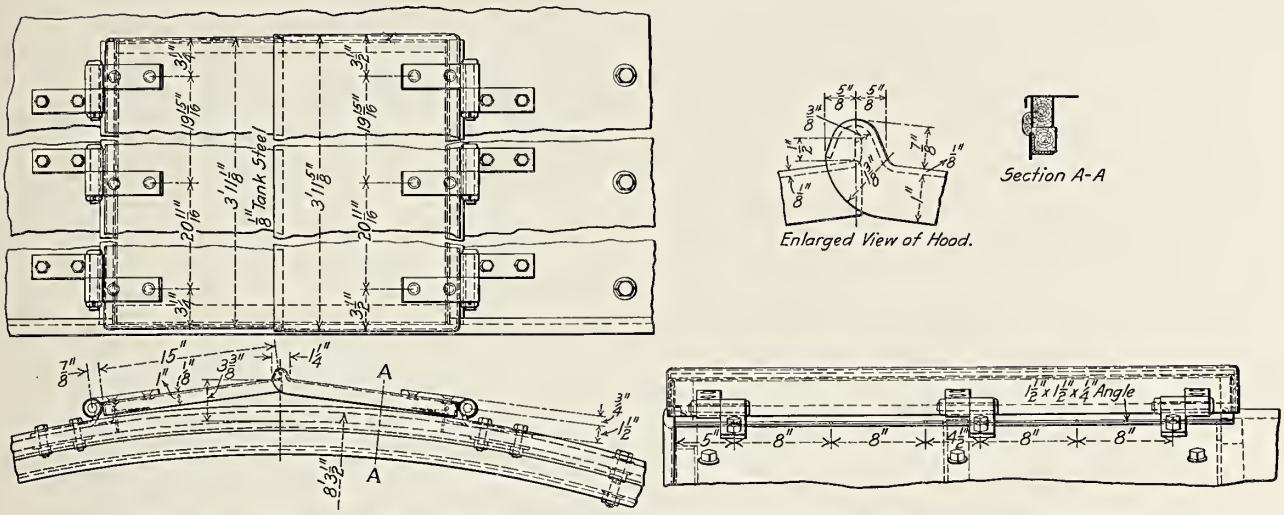

Fig. 1154—Cab Roof Door for Atlantic Type (4-4-2) Locomotive; Pennsylvania Railroad.

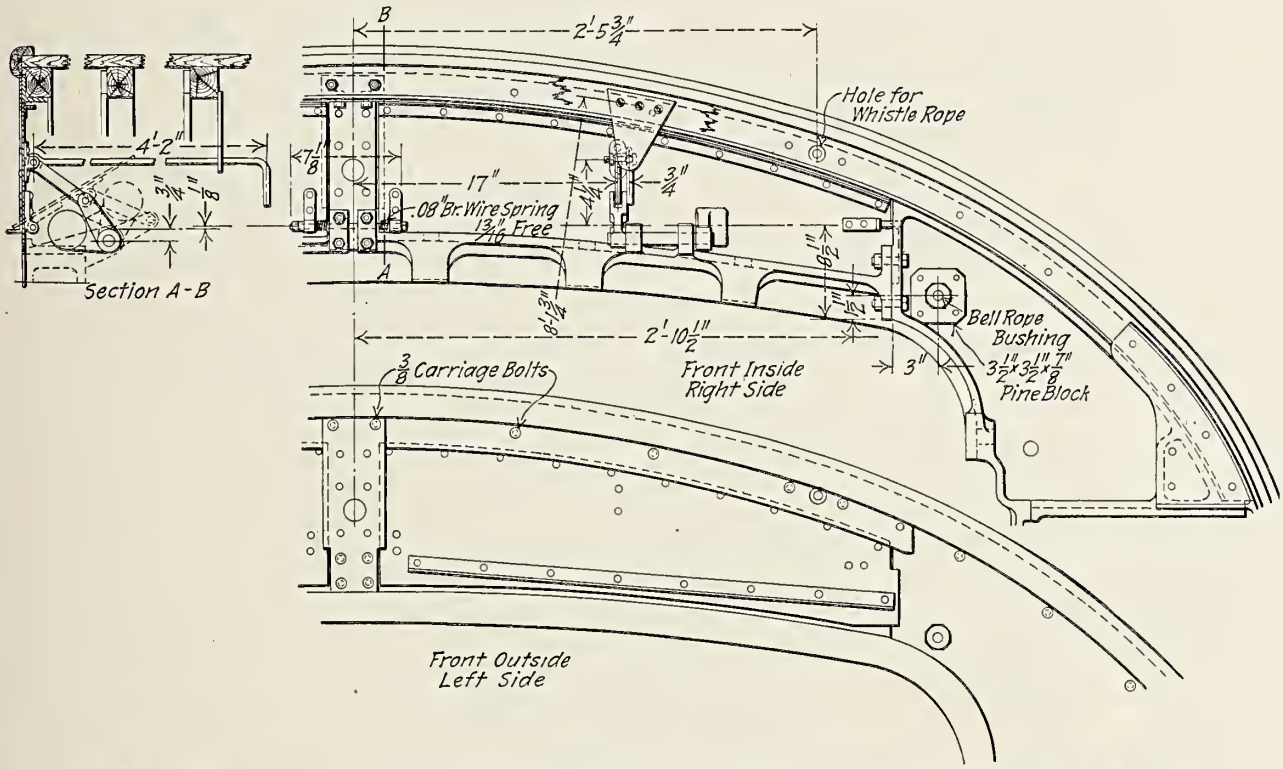

Fig. 1155—Cab Front Ventilator for Atlantic Type (4-4-2) Locomotive; Pennsylvania Railroad.

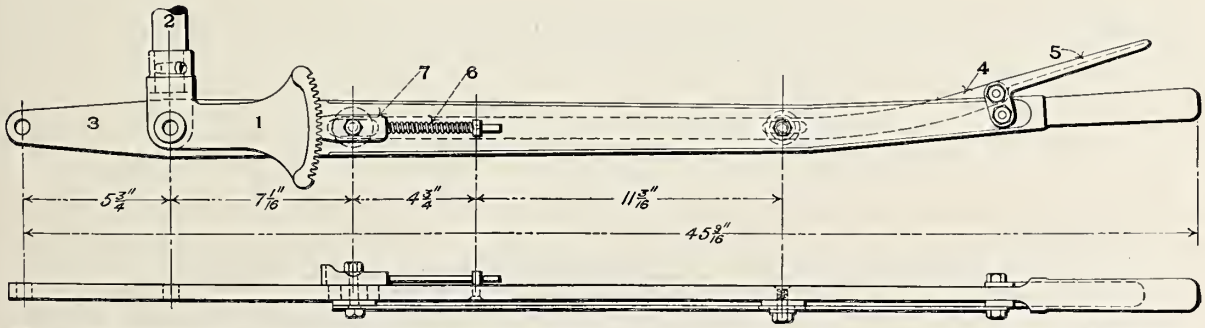

Fig. 1156—Throttle Lever and Quadrant for Atlantic Type (4-4-2) Locomotive; Pennsylvania Railroad.

Numbers Refer to Names of Parts on Page 510.

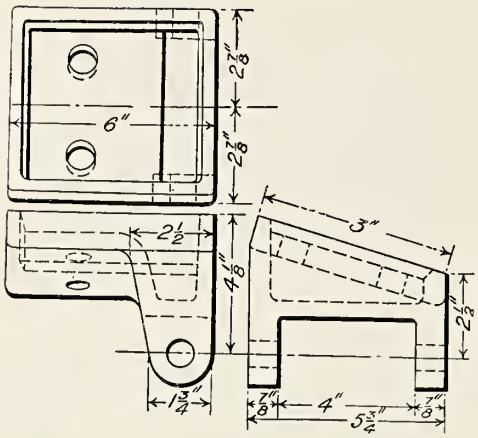

Fig. 1157—Throttle Lever Fulcrum.

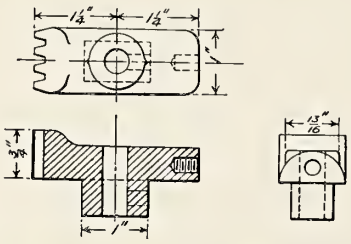

Fig. 1158—Throttle Lever Latch.

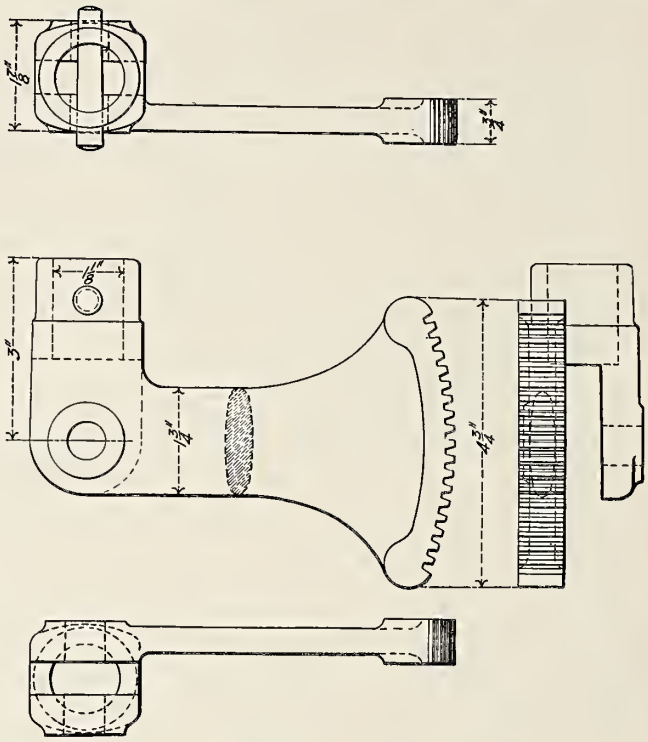

Fig. 1159—Throttle Lever Quadrant.

Figs. 1157-1159 are Details of Throttle Lever for Atlantic Type (4-4-2) Locomotive; Pennsylvania Railroad.

Names of Parts of Throttle Levers, Figs. 1156-1161.

1 *Throttle Lever Quadrant*
2 *Throttle Stem*
3 *Throttle Lever*
4 *Throttle Lever Latch Connection*
5 *Throttle Lever Latch Handle*
6 *Throttle Lever Latch Spring*
7 *Throttle Lever Latch*
8 *Throttle Lever Fulcrum*

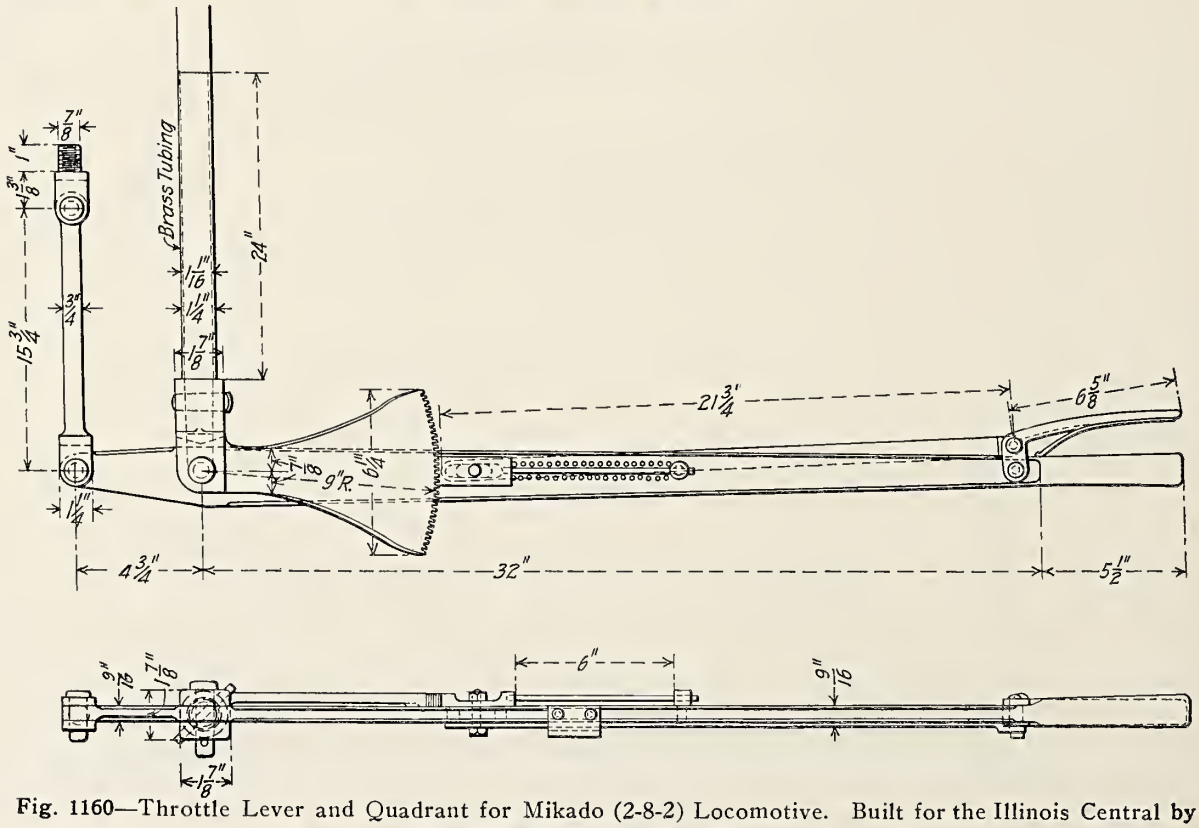

Fig. 1160—Throttle Lever and Quadrant for Mikado (2-8-2) Locomotive. Built for the Illinois Central by the Baldwin Locomotive Works.

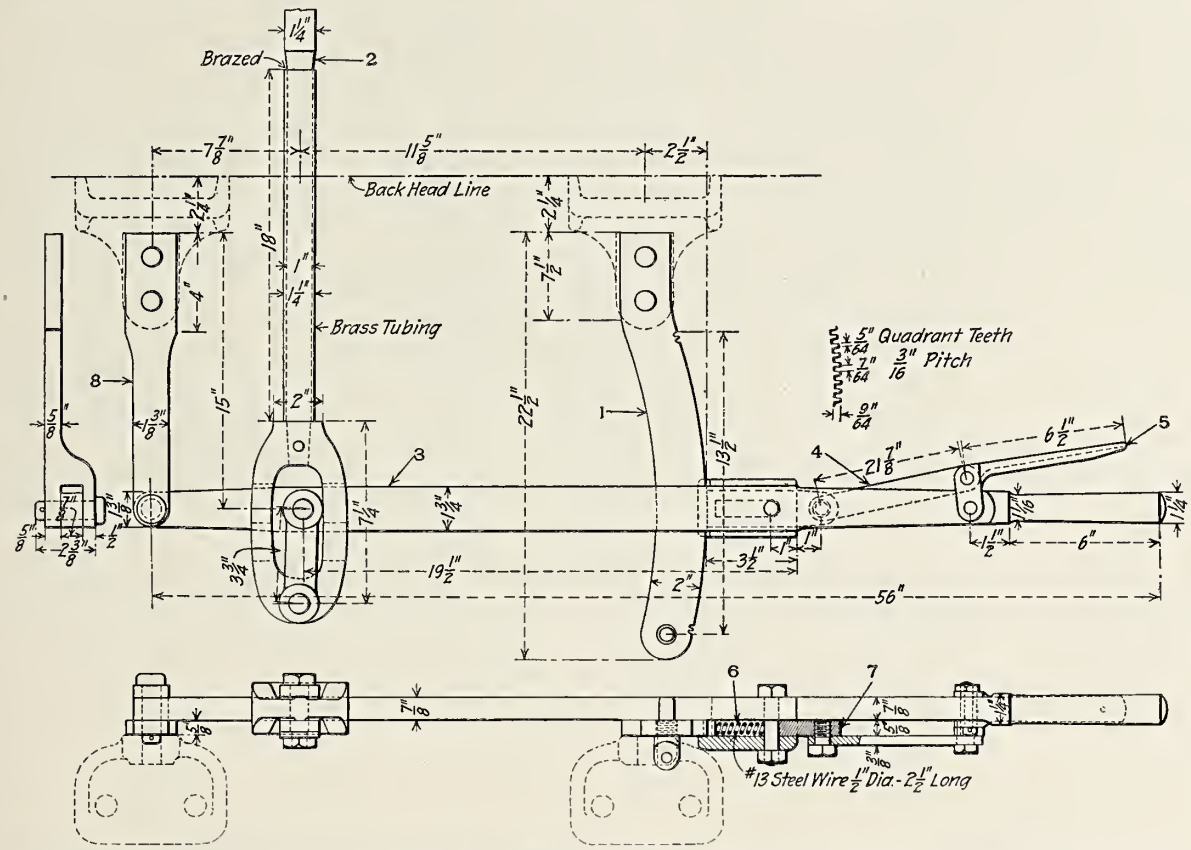

Fig. 1161—Throttle Lever and Quadrant for Mountain Type (4-8-2) Locomotive. Built for the Chesapeake & Ohio by the American Locomotive Company.

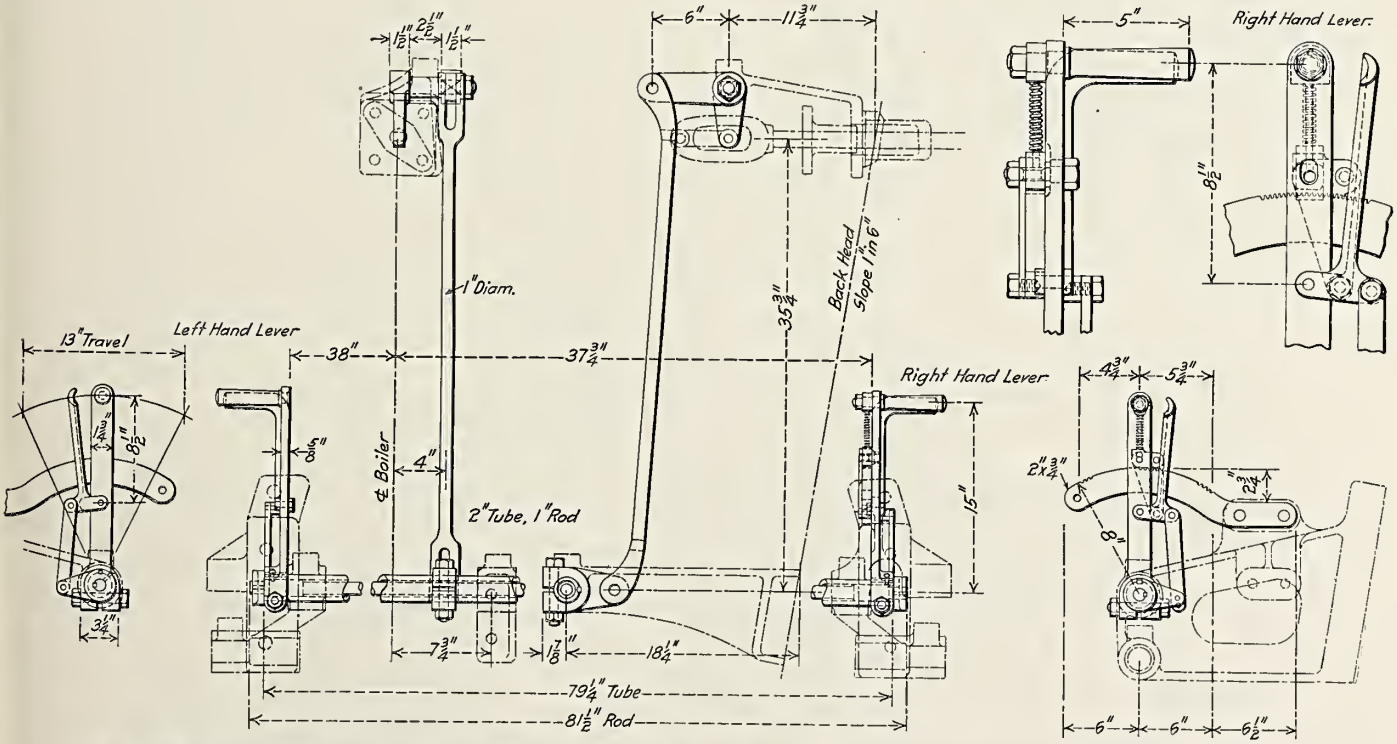

Fig. 1162—Throttle Levers for Both Sides of the Cab for Mallet Articulated (0-8-8-0) Locomotive. Built for the New York Central by the American Locomotive Company.

Numbers Refer to Names of Parts on Page 510.

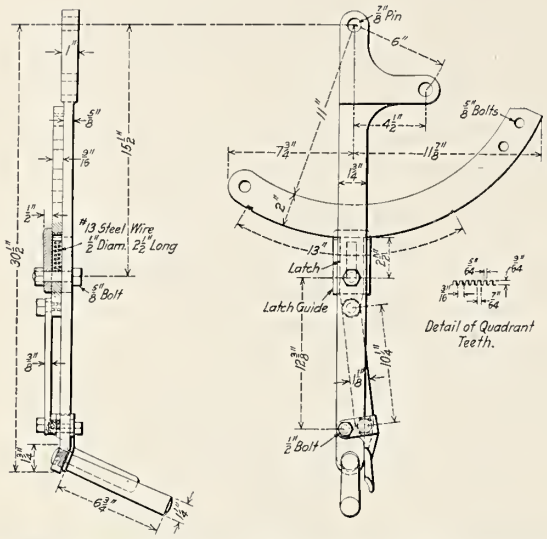

Fig. 1163—Throttle Lever for Woodard Throttle Valve; American Locomotive Company.

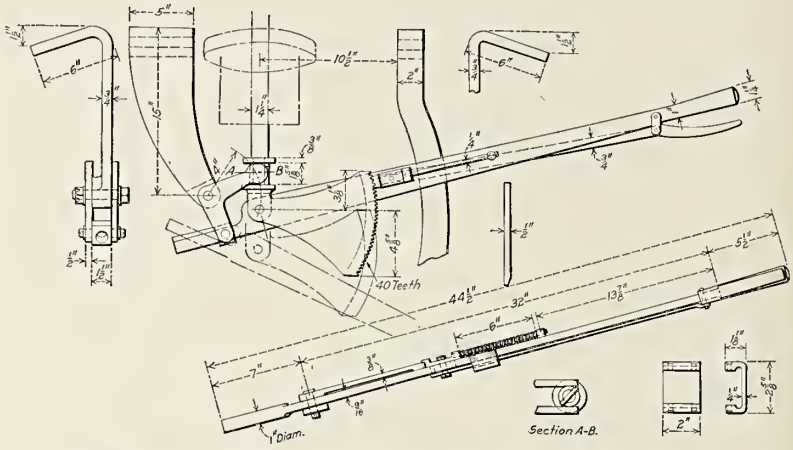

Fig. 1164—Throttle Lever with Bell Crank; Baldwin Locomotive Works.

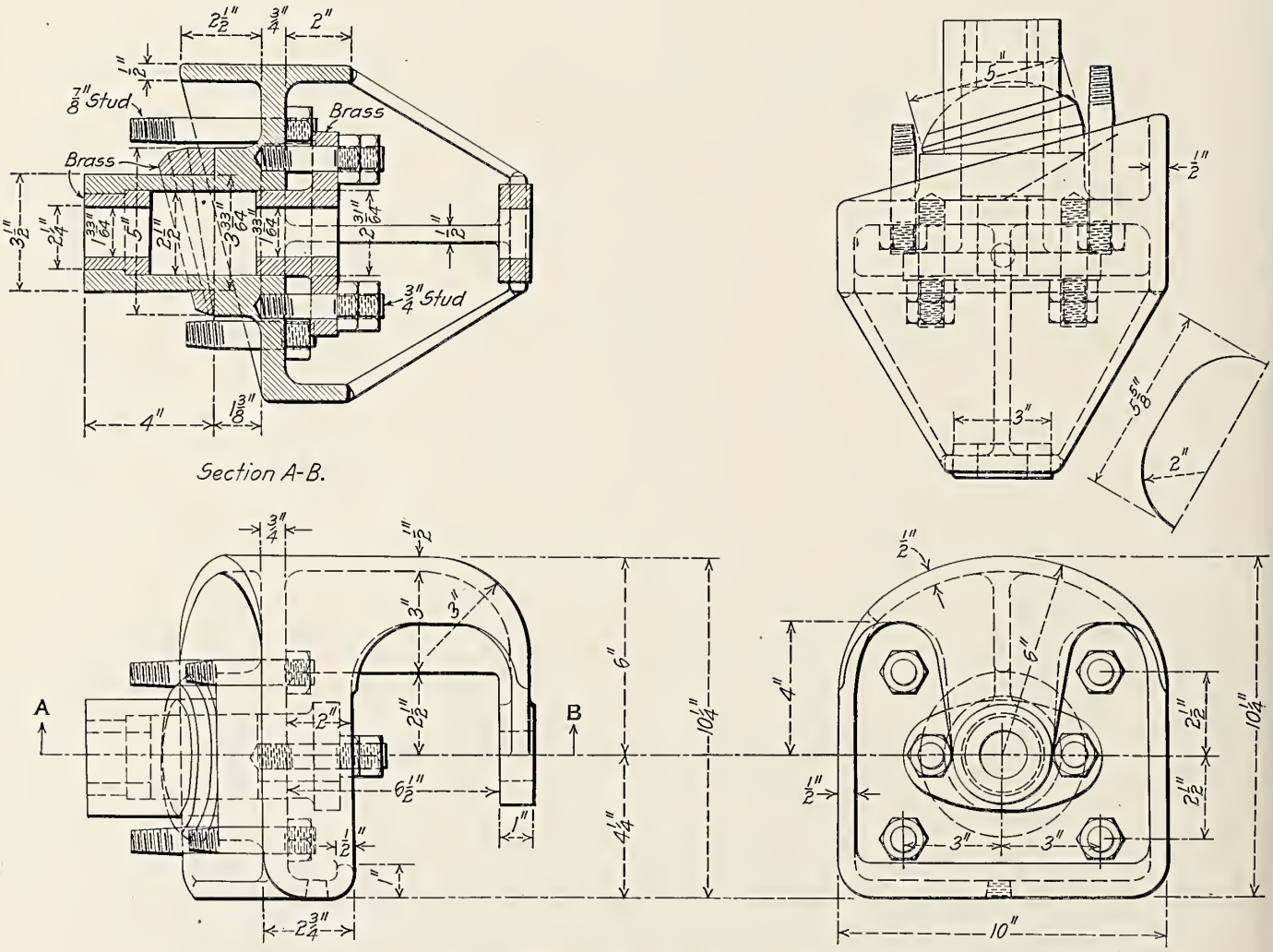

Fig. 1165—Stuffing Box for Woodard Throttle Valve; American Locomotive Company.

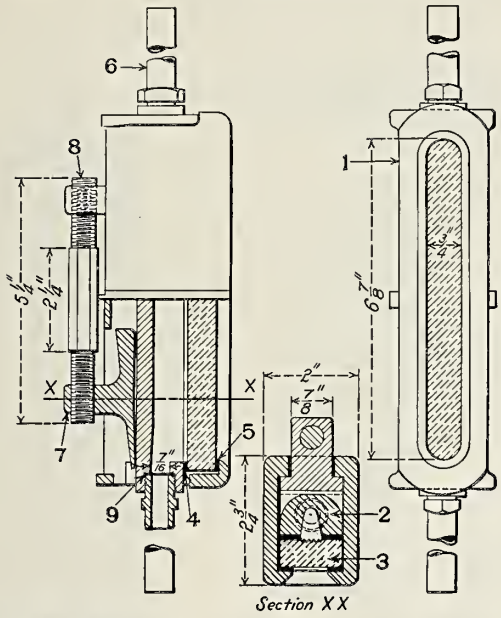

Fig. 1166—Klinger Type Self-Adjusting Water Gage, Style H; Wiltbonco Manufacturing Company.

Names of Parts of Figs. 1166-1167.

1 *Body*
2 *Back Piece*
3 *Glass*
4 *Klingerite Gasket*
5 *Asbestos*
6 *Gage Stem*
7 *Spring Steel Wedge*
8 *Steel Shaft*
9 *Copper Washer*

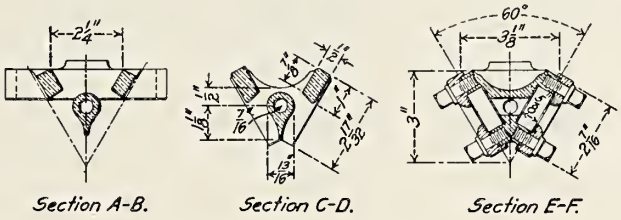

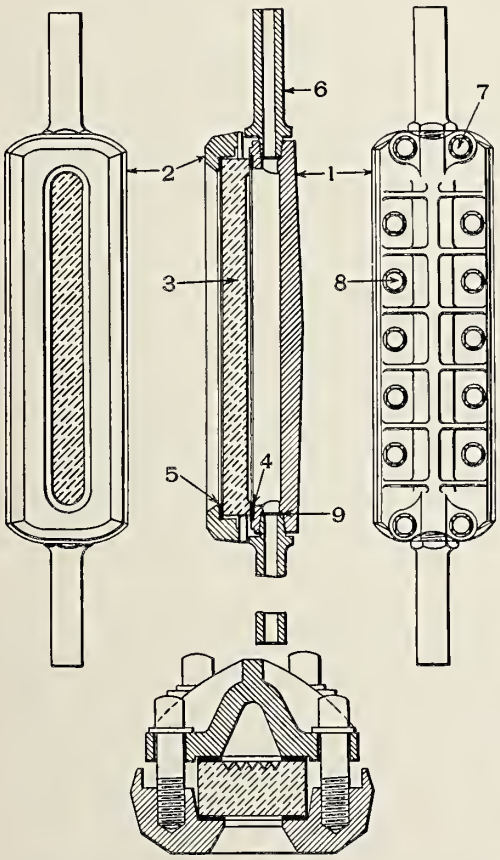

Fig. 1167—Klinger Type Water Gage, Style B; Wiltbonco Manufacturing Company.

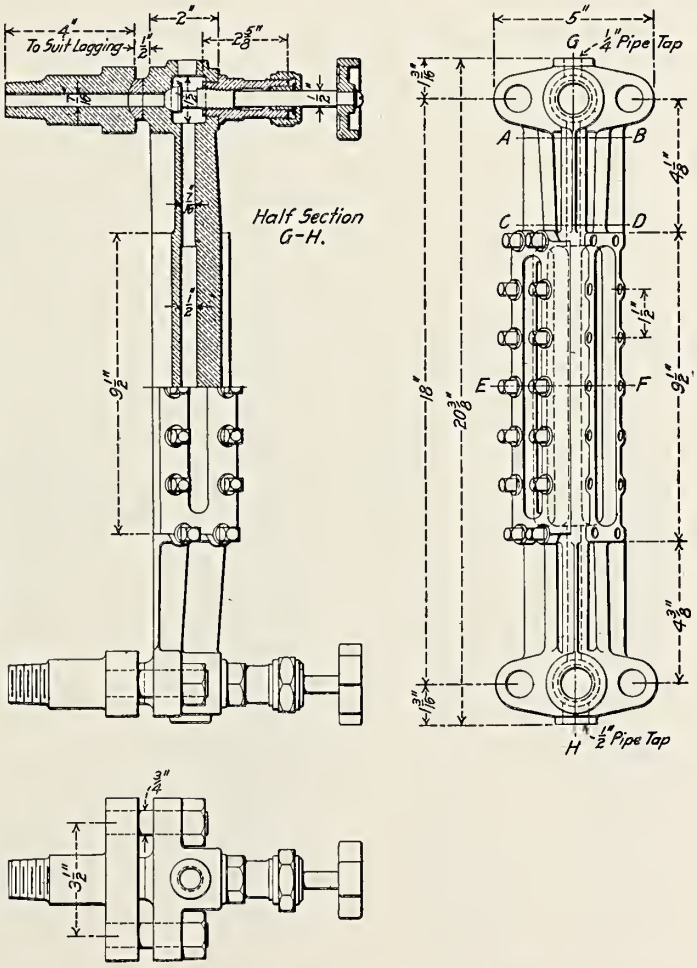

Fig. 1168—Goodwin Duplex Water Gage; Southern Pacific.

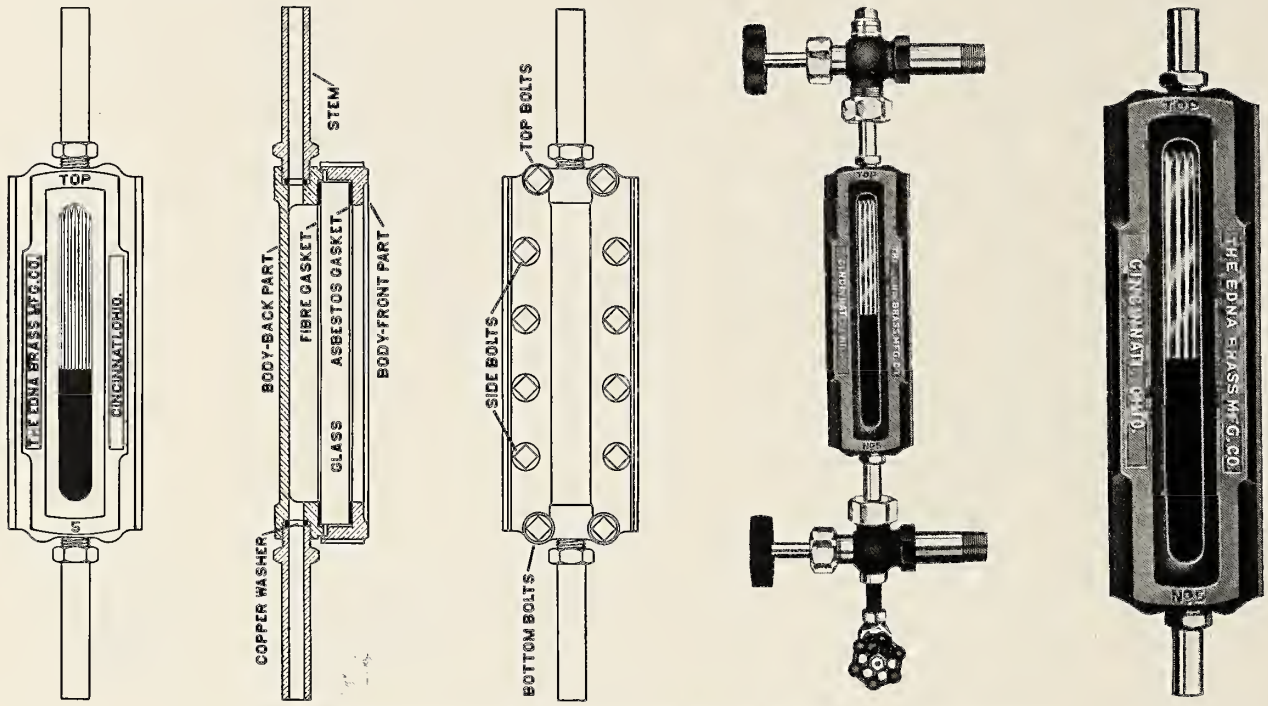

Fig. 1169—Reflex Water Gage; Edna Brass Manufacturing Company.

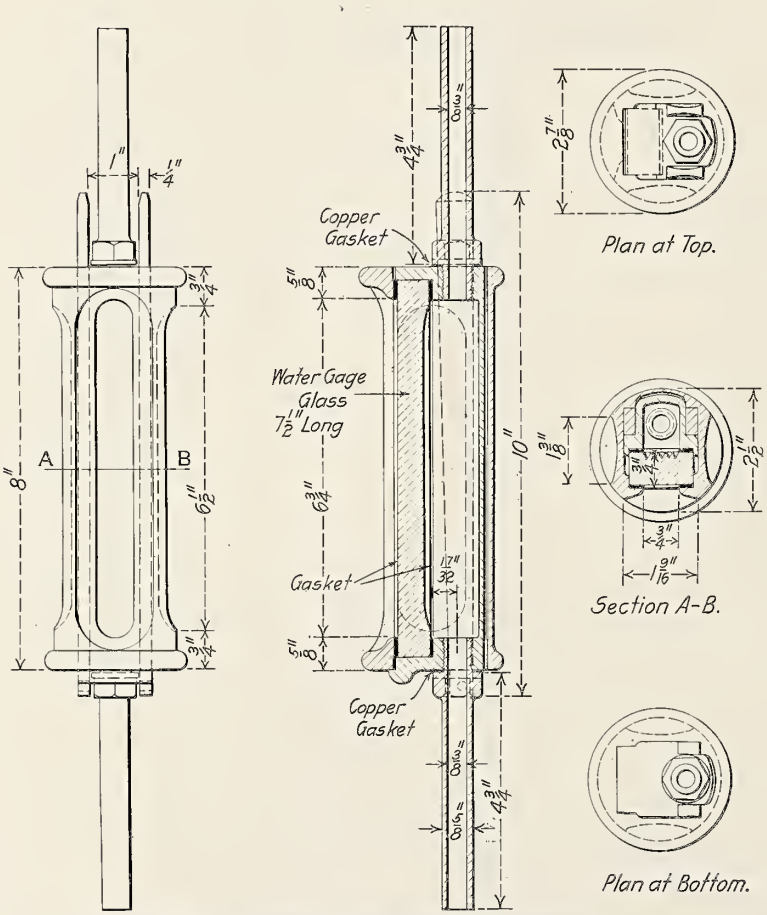

Fig. 1170—Taylor Water Gage; Patterson-Allen Engineering Company.

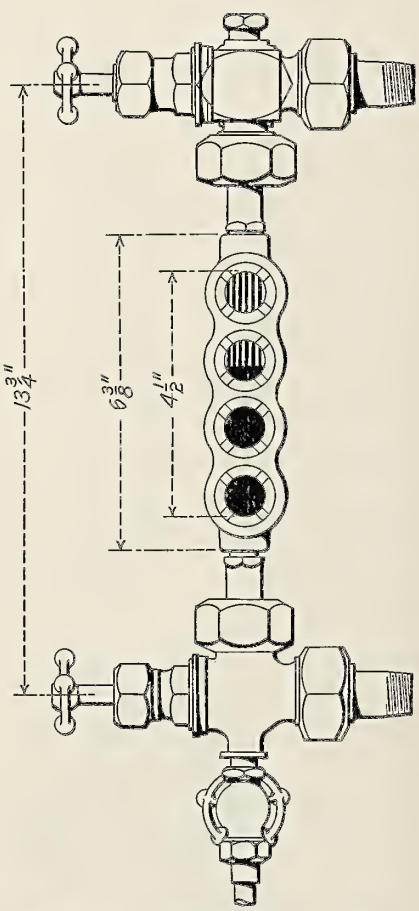

Fig. 1171—Bullseye Water Gage; C. M. Mendenhall.

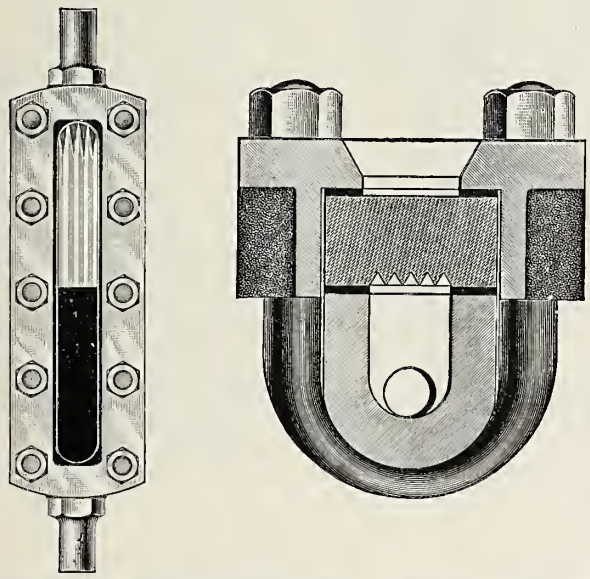

Fig. 1172—Reflex Water Gage; Jerguson Gage & Valve Company.

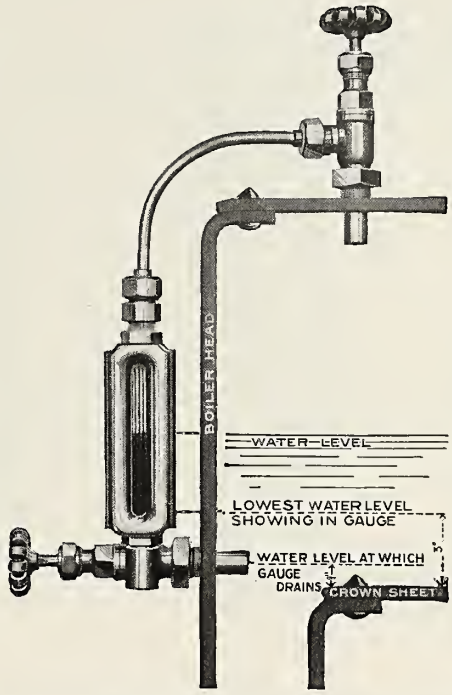

Fig. 1173—Reflex Water Gage; Sargent Company.

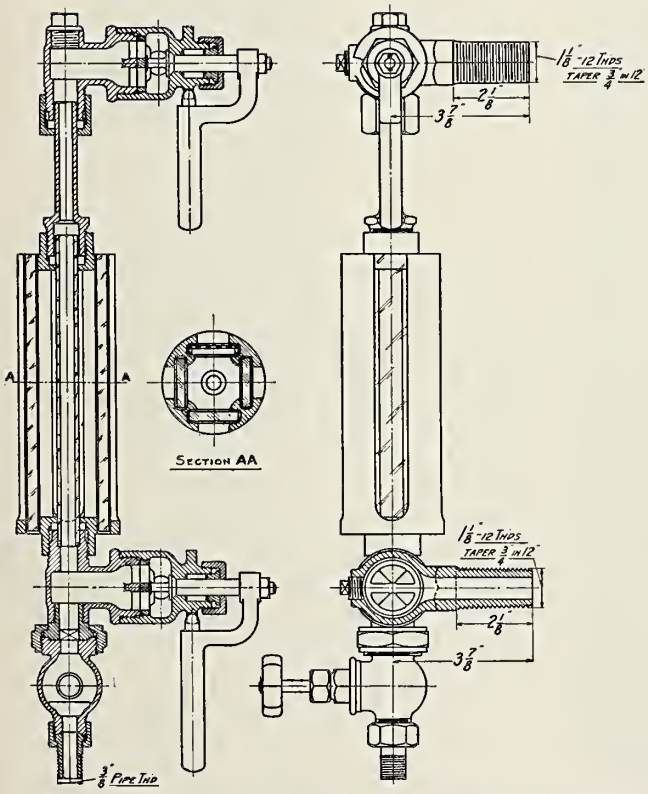

Fig. 1174—Delco Water Gage; Nathan Manufacturing Company.

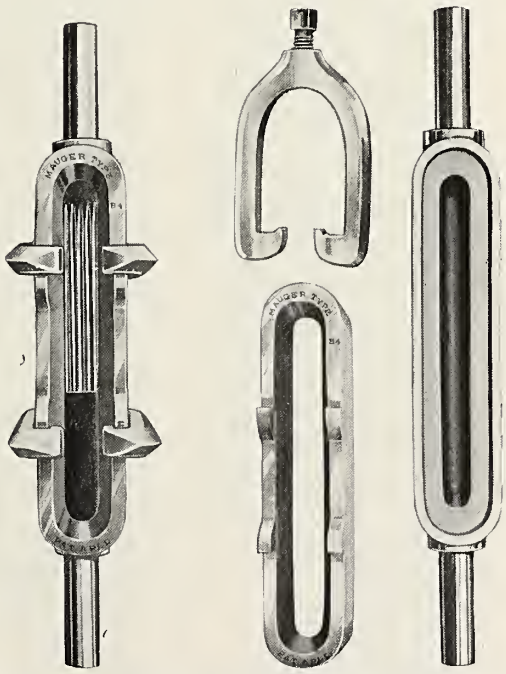

Fig. 1175—Mauger Type Water Gage; Diamond Specialty & Supply Company.

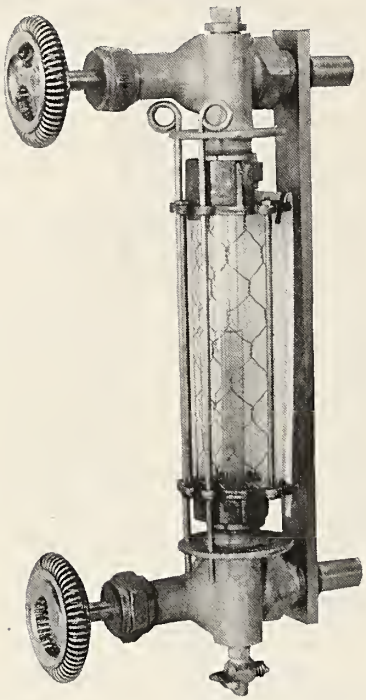

Fig. 1176—Iron Clad Water Glass Protector and E. S. E. Water Gage Cocks; Sargent Company.

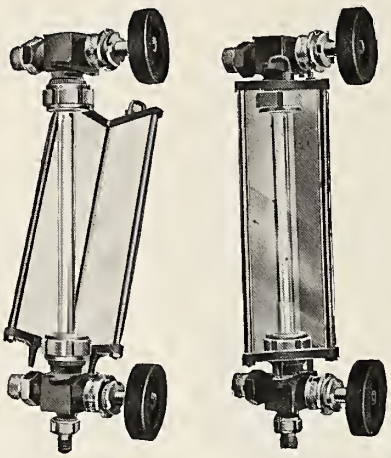

Fig. 1177—Bordo Water Glass Protector; L. J. Bordo & Co.

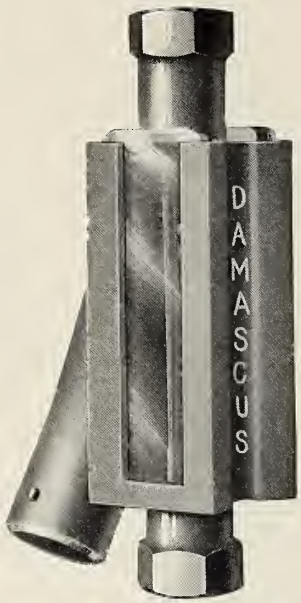

Fig. 1178—Damascus Water Glass Protector; Damascus Brake Beam Company.

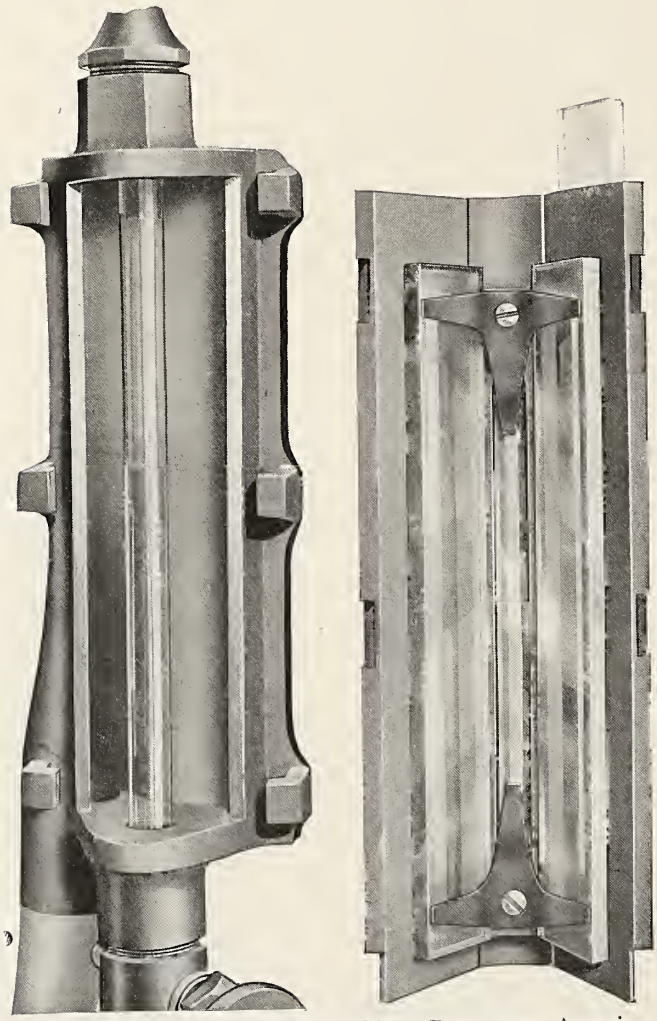

Fig. 1179—Babcock Water Glass Protector; American Car & Ship Hardware Company.

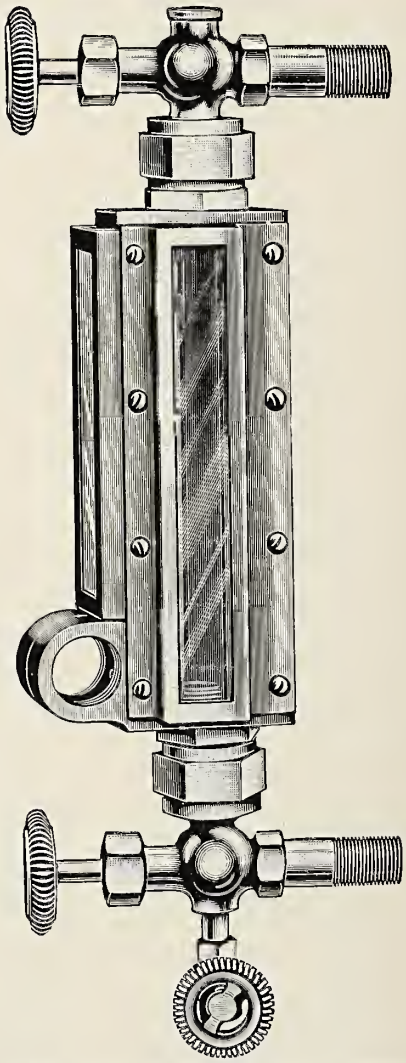

Fig. 1180—Carbery's Water Glass Protector; Handlan-Buck Manufacturing Company.

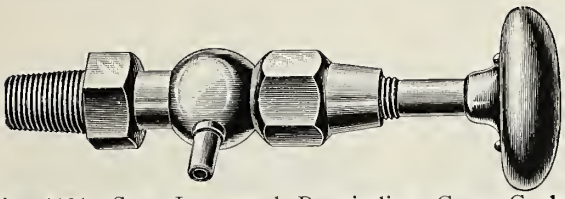

Fig. 1181—Star Improved Regrinding Gage Cock; Star Brass Manufacturing Company.

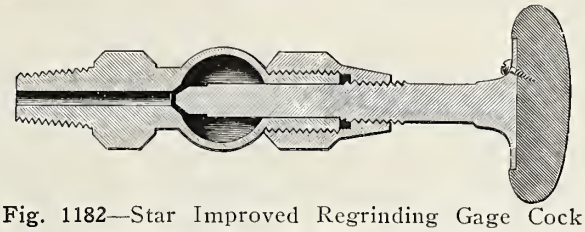

Fig. 1182—Star Improved Regrinding Gage Cock; Star Brass Manufacturing Company.

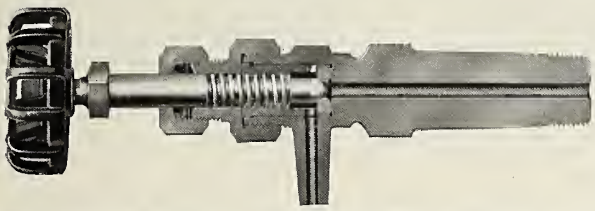

Fig. 1183—Baltimore Gage Cock; The Hancock Inspirator Company.

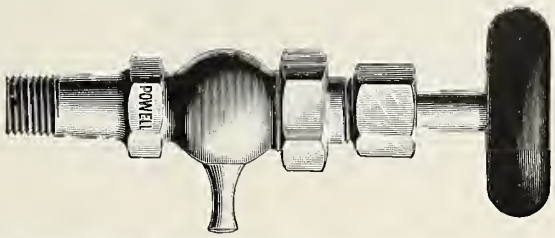

Fig. 1184—Regrinding Gage Cock; The Wm. Powell Company.

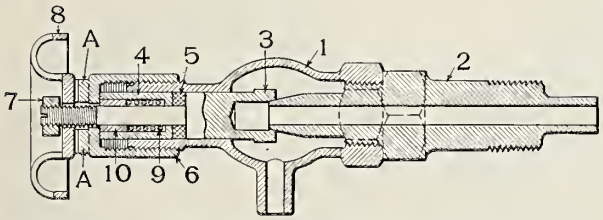

Fig. 1185—"Never-Leak" Gage Cock; Nathan Manufacturing Company.

Names of Parts of Fig. 1185.

1	*Body*	6	*Packing Sleeve*
2	*Shank*	7	*Top Nut*
3	*Spindle*	8	*Hand Wheel*
4	*Gland*	9	*Spring*
5	*Packing Ring*	10	*Spring Follower*

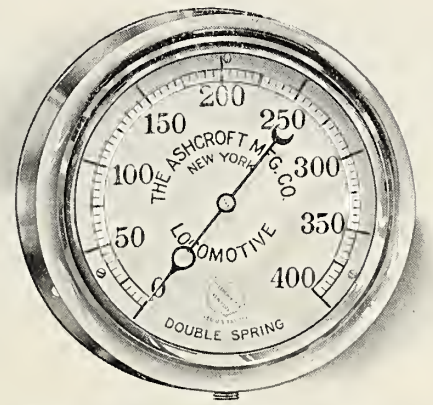

Fig. 1186—Ashcroft Double Spring Steam Gage.

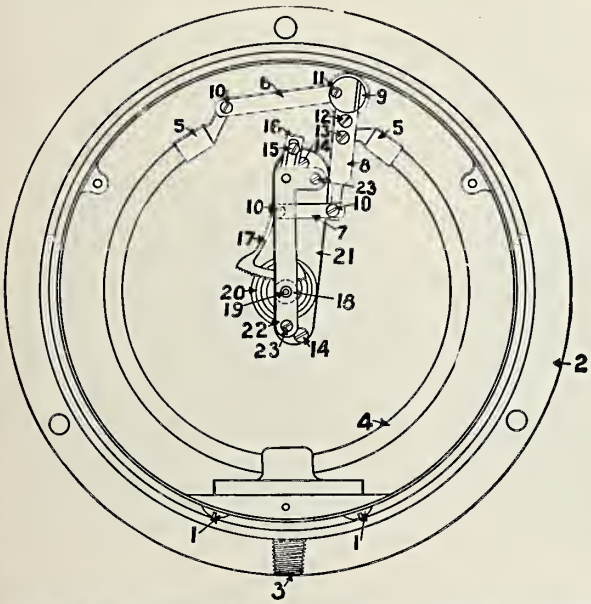

Fig. 1187—Ashton-Lane Bourdon Double Spring Steam Gage; Ashton Valve Company.

Names of Parts of Fig. 1187.

1	*Socket Screws*	14	*Screws Attaching Movement Case*
2	*Case*	15	*Adjusting Slide Lock Screw*
3	*Socket*	16	*Adjusting Slide*
4	*Spring*	17	*Segment*
5	*Tip*	18	*Pinion*
6	*Main Connection Arm*	19	*Bushing*
7	*Movement Connection*	20	*Hair Spring*
8	*Lever*	21	*Bottom Movement Plate*
9	*Hub*	22	*Top Movement Plate*
10	*Connection Screws*	23	*Screws Holding Movement Together*
11	*Hub Screw*		
12	*Lock Screw*		
13	*Lever Connection Screw*		

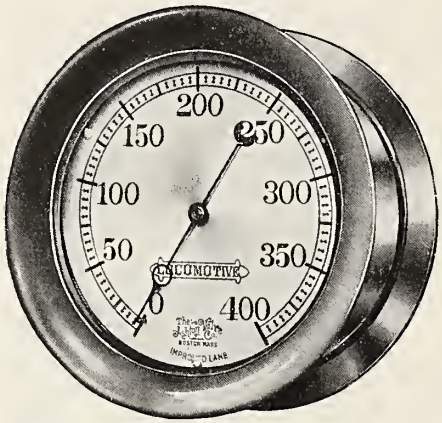

Fig. 1188—Ashton - Lane Bourdon Double Spring Steam Gage.

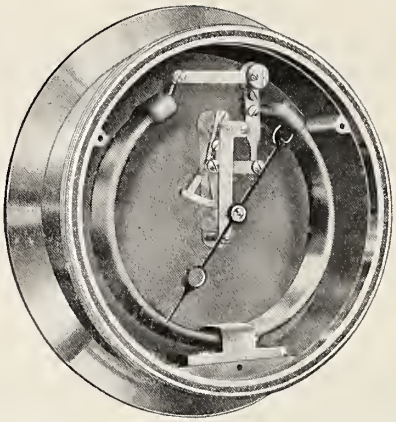

Fig. 1189—Ashton - Lane Bourdon Double Spring Steam Gage.

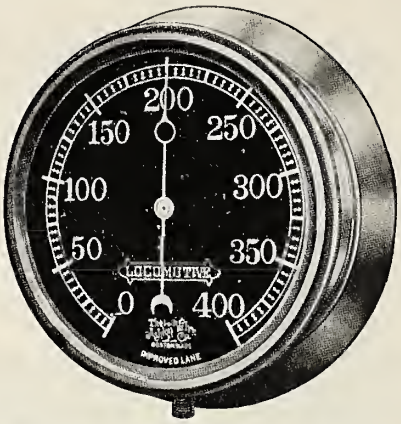

Fig. 1190—Ashton Vertical Reading Steam Gage.

The Ashton Valve Company.

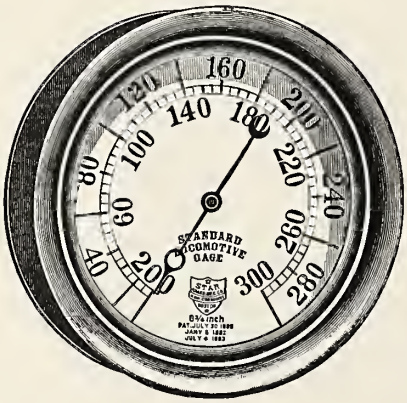

Fig. 1191—Star Improved Double Spring Bourdon Steam Gage.

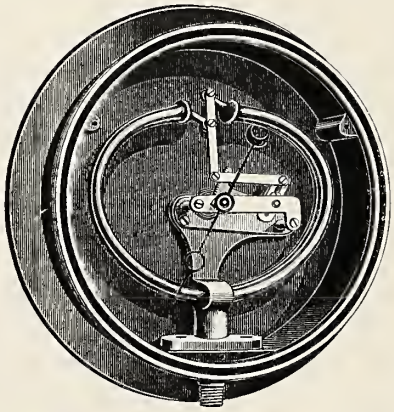

Fig. 1192—Star Improved Double Spring Bourdon Steam Gage.

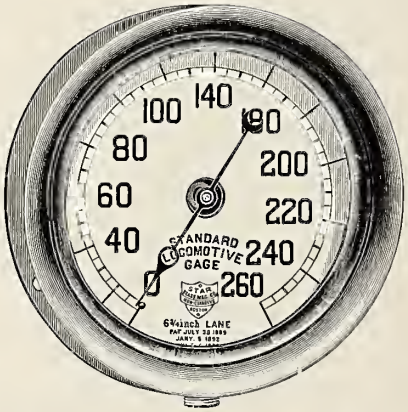

Fig. 1193—Star Improved Double Spring Steam Gage with White Dial.

Star Brass Manufacturing Company.

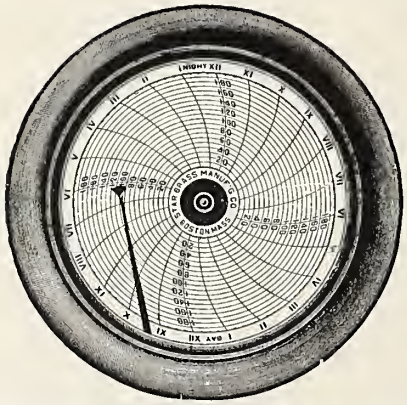

Fig. 1194—Star Pressure Recording Gage.

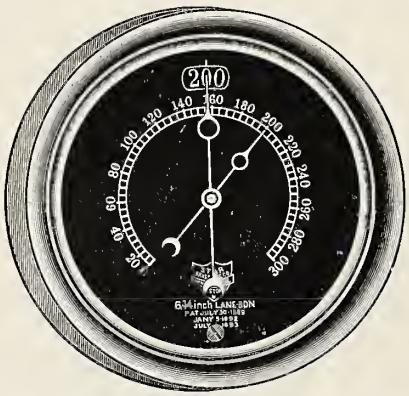

Fig. 1195—Star Improved Standard Steam Gage with Movable Dial.

Fig. 1196—Star Improved Double Spring Gage with Black Dial.

Star Brass Manufacturing Company.

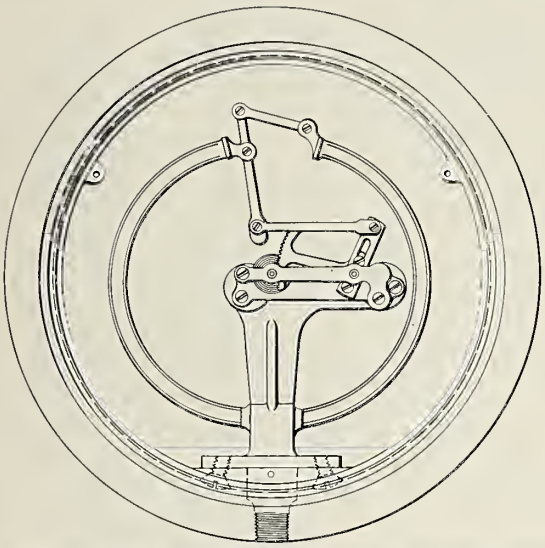

Fig. 1197—Standard Double Spring Bourdon Steam Gage; Star Brass Manufacturing Company.

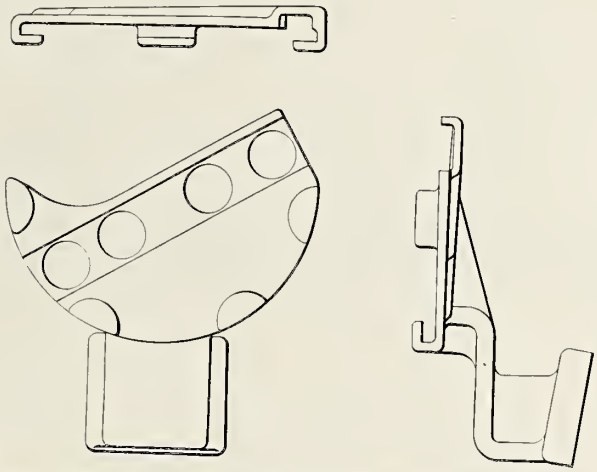

Fig. 1198—Steam Gage Bracket; Barco Brass & Joint Company.

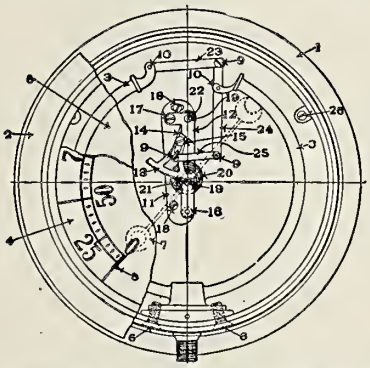

Fig. 1199—Double Spring Steam Gage; American Steam Gauge and Valve Manufacturing Company.

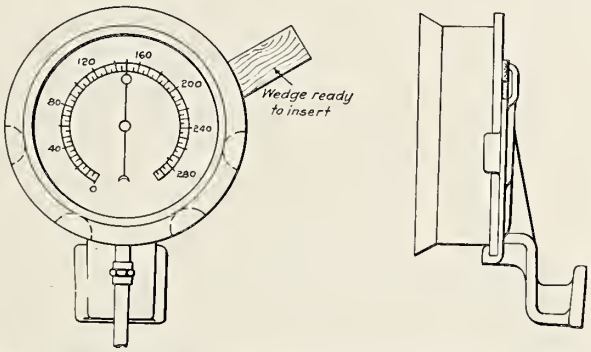

Fig. 1200—Application of Steam Gage Bracket; Barco Brass & Joint Company.

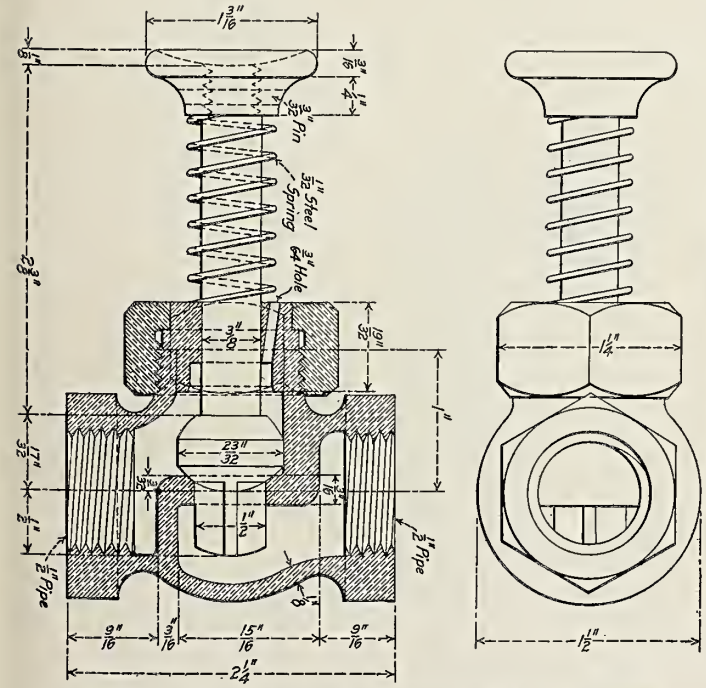

Fig. 1201—Semi-Automatic Valve in Pipe Leading to Whistle and Fire Control on Low Water Alarm; Southern Pacific.

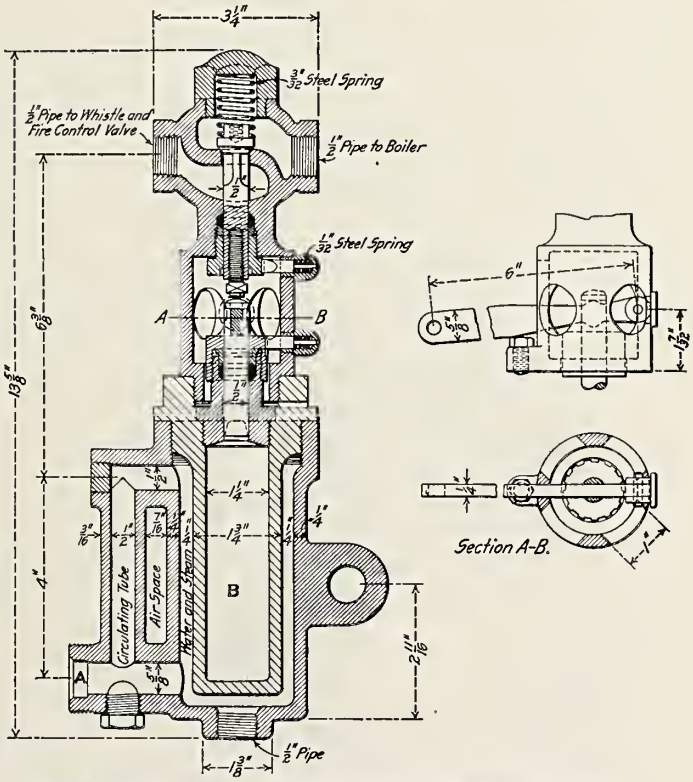

Fig. 1202—Section of Automatic Low Water Alarm and Fire Control Apparatus on Low Water Alarm; Southern Pacific.

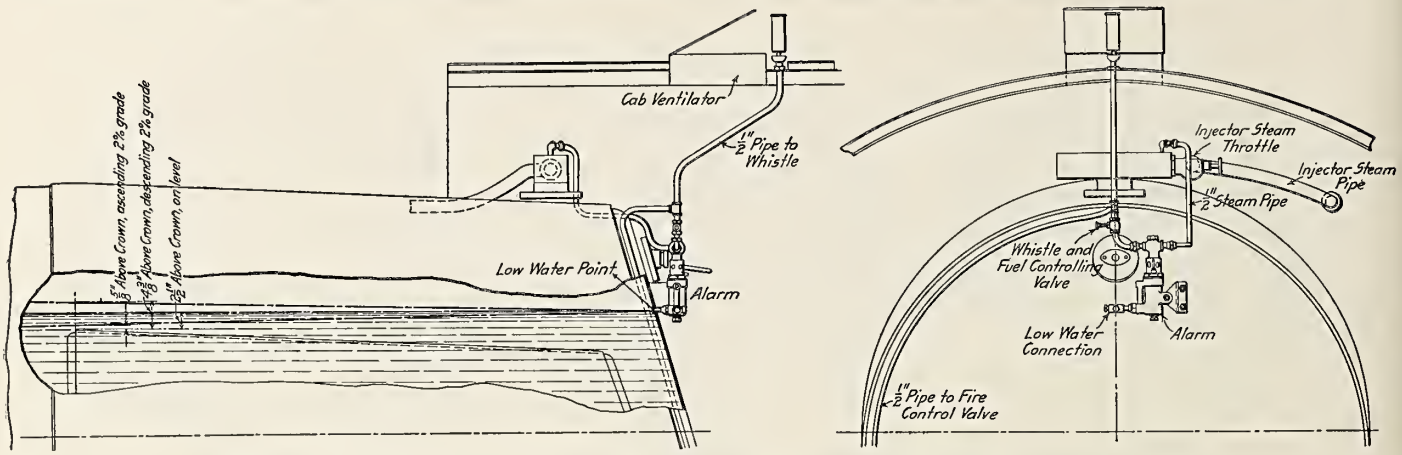

Fig. 1203—Application of Low Water Alarm to a Locomotive Boiler; Southern Pacific.

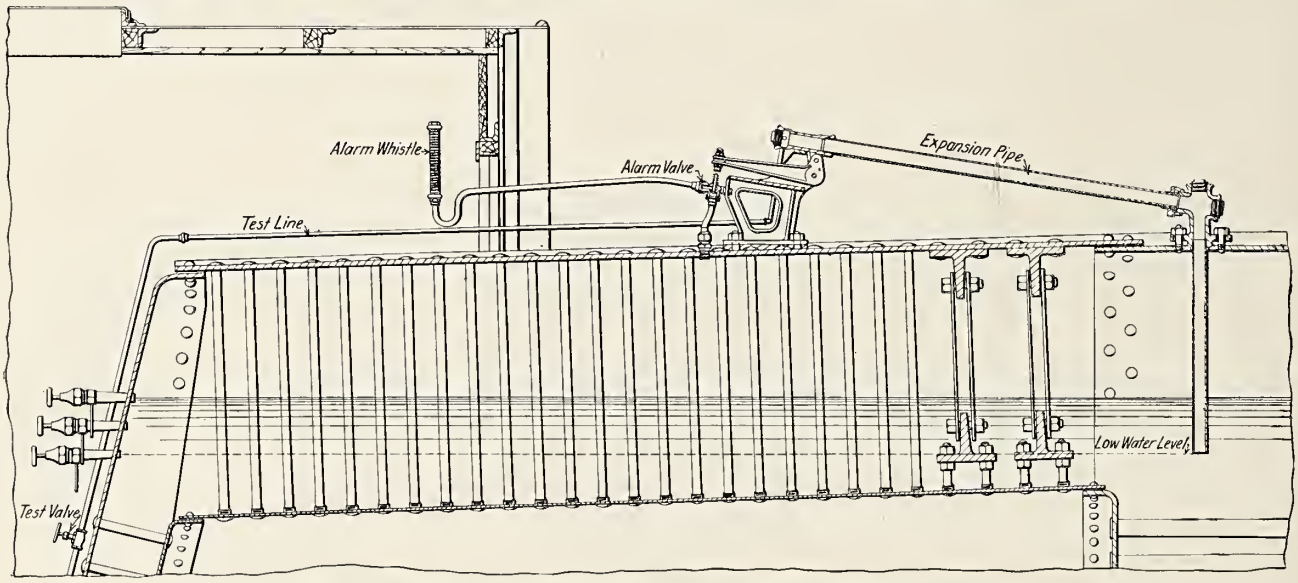

Fig. 1204—Sentinel Low Water Alarm; The Pilliod Company.

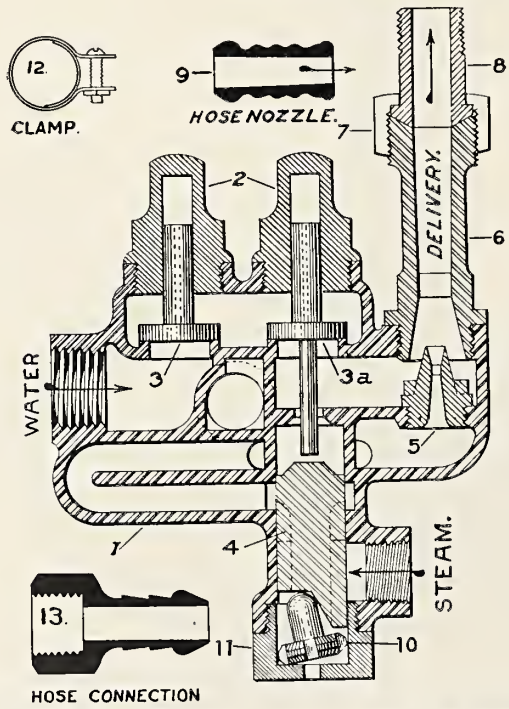

Fig. 1205—Edna Type N L Non-Lifting Coal Sprinkler; The Edna Brass Manufacturing Company.

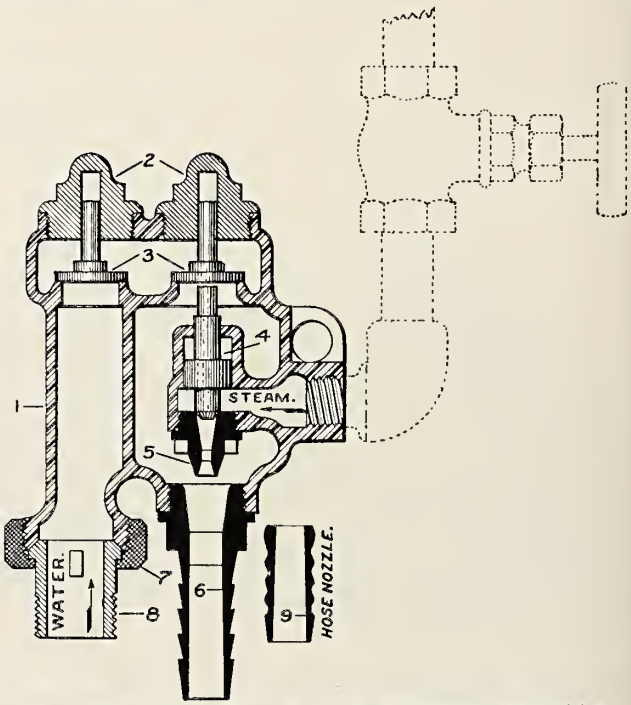

Fig. 1206—Edna Type E Coal Sprinkler; The Edna Brass Manufacturing Company.

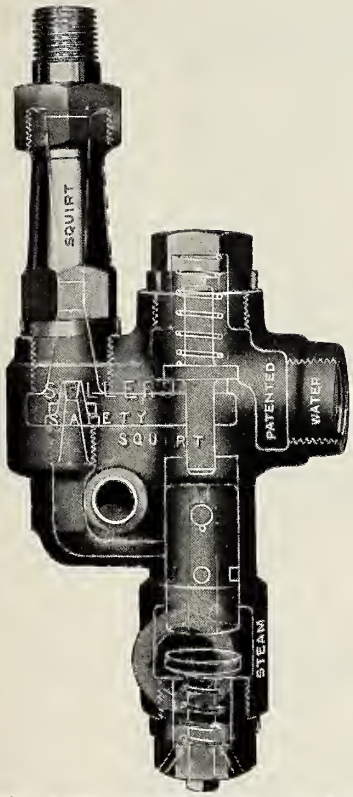

Fig. 1207—Safety Squirt; William Sellers & Company.

Names of Parts of Fig. 1208.

1 *Body*
2 *Steam Nozzle and Nut*
3 *Bonnet and Nut*
4 *Spindle*
5 *Lever Link*
6 *Lever*
7 *Fulcrum Bar*
8 *Pin and Cotter*
9 *Delivery Nozzle*
10 *Steam Connection*
11 *Water Connection*
12 *"Never Slip" Hose Clamp*

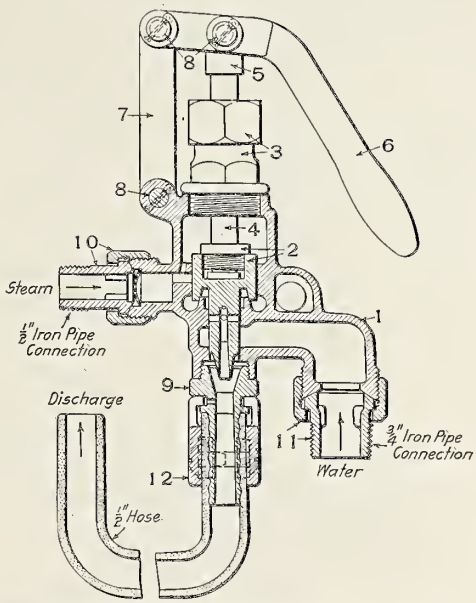

Fig. 1208—Safety Coal Sprinkler; Nathan Manufacturing Company.

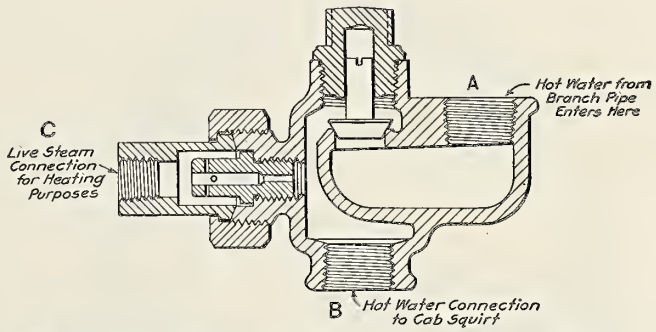

Fig. 1210—Heater Check Used in Connection with Squirt Hose Ejector; Ohio Injector Company

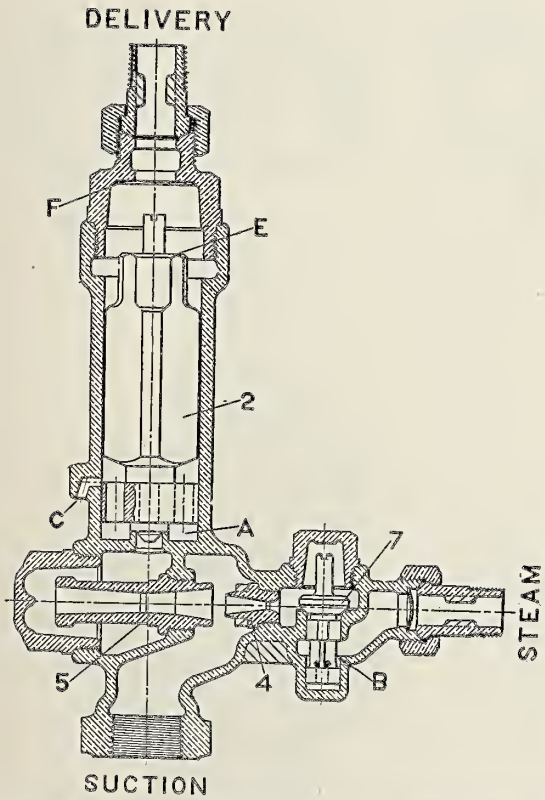

Fig. 1209—Coal Sprinkler; Hancock Inspirator Company.

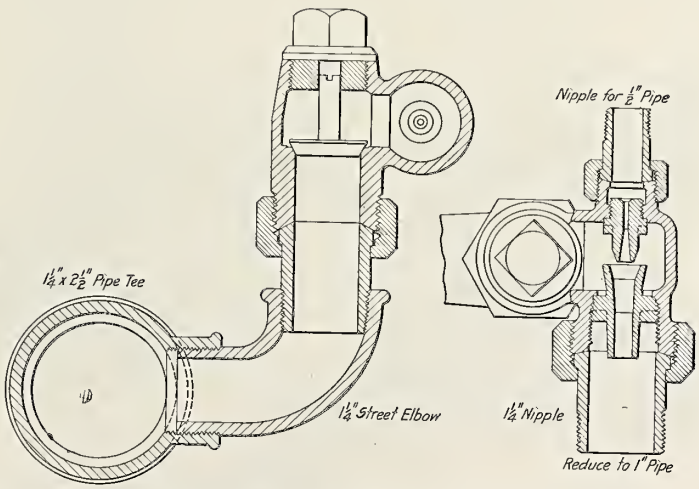

Fig. 1211—Squirt Hose Ejector; Ohio Injector Company

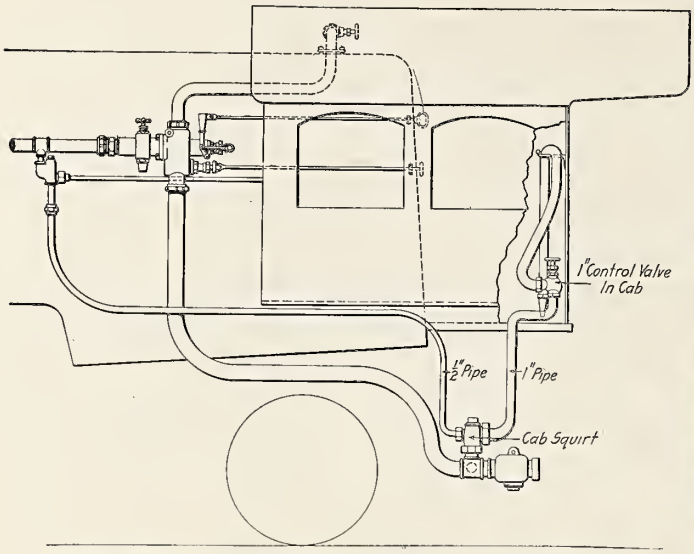

Fig. 1212—Arrangement of Squirt Hose Ejector; Ohio Injector Company.

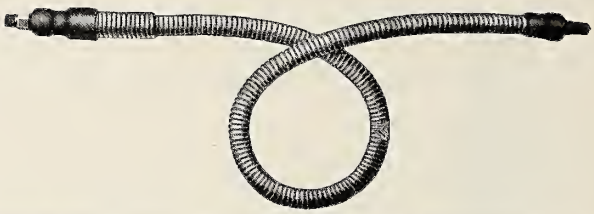

Fig. 1213—Squirt Hose; H. W. Johns-Manville Company.

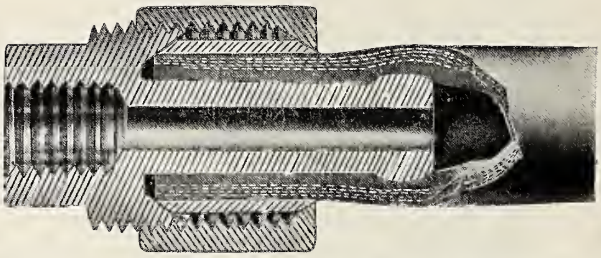

Fig. 1214—Safety Hose Clamp; Mahr Manufacturing Company.

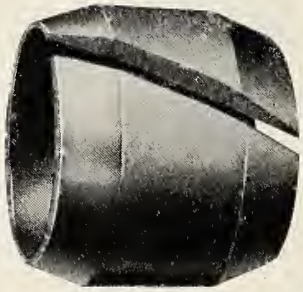

Fig. 1216—Clamping Sleeve for Safety Hose Clamp; Mahr Manufacturing Company

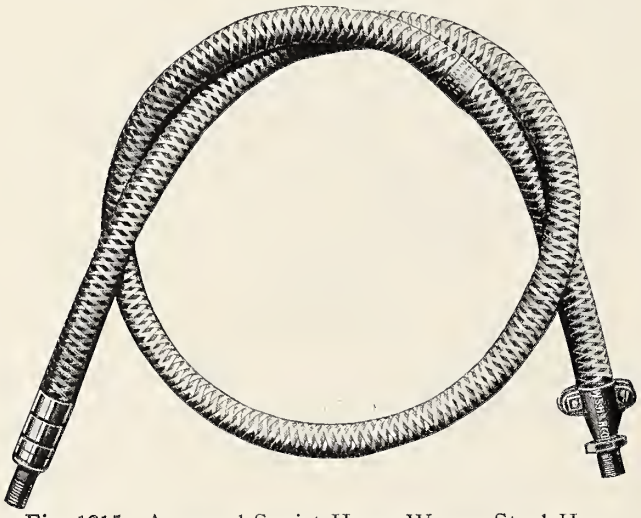

Fig. 1215—Armored Squirt Hose; Woven Steel Hose & Rubber Company.

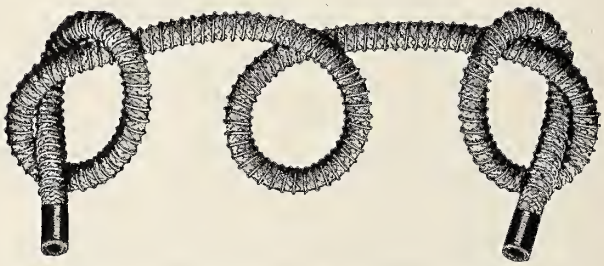

Fig. 1217—Squirt Hose; Mulconroy Company.

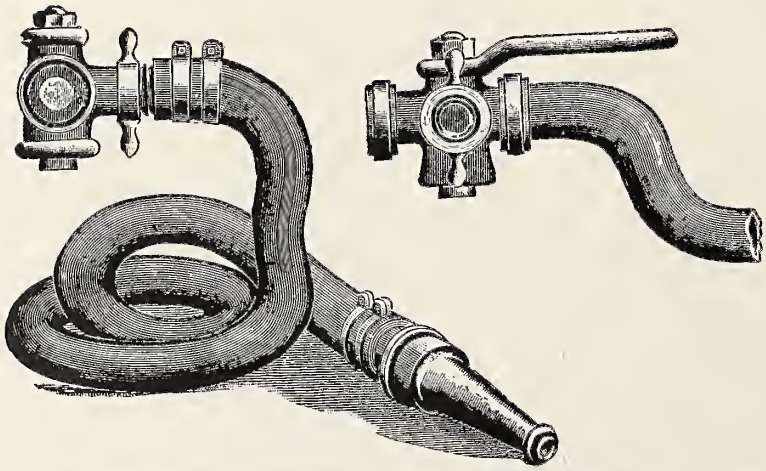

Fig. 1218—Fire Extinguisher; Edna Brass Manufacturing Company.

Fig. 1219—High Pressure Steam Hose Coupling; Mulconroy Company.

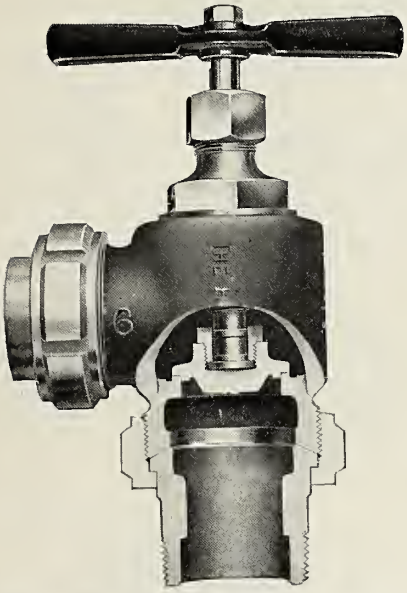

Fig. 1220—Hancock Main Steam Valve; The Hancock Inspirator Company.

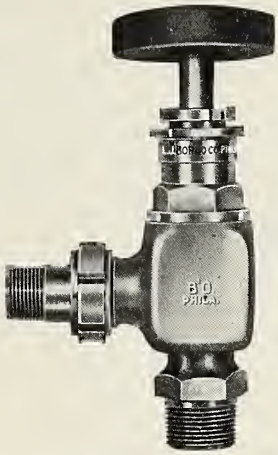

Fig. 1221—Bordo Blower Valve; L. J. Bordo Company.

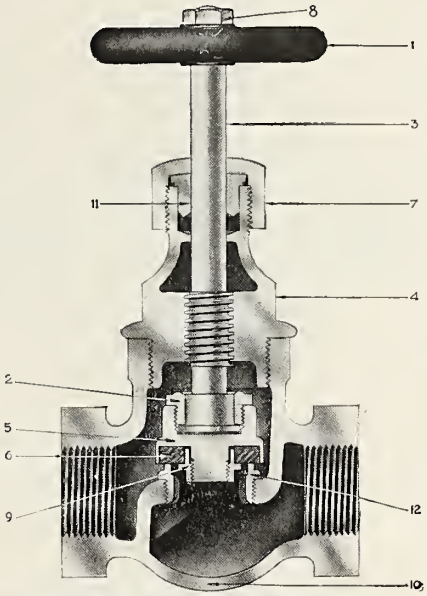

Fig. 1222—Brass Globe Valve; Jenkins Brothers.

Names of Parts of Fig. 1222.

1	*Wheel*	5	*Disc Holder*	9	*Disc Nut*
2	*Lock Nut*	6	*Disc*	10	*Body*
3	*Spindle*	7	*Waste Nut*	11	*Gland or Follower*
4	*Bonnet*	8	*Wheel Nut*	12	*Seat Ring*

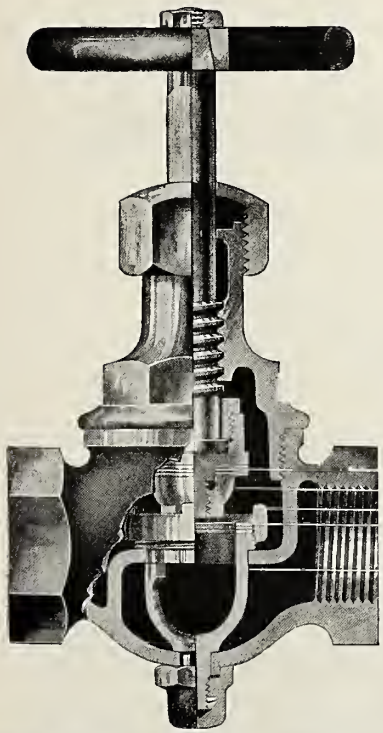

Fig. 1223—Multi-plate Globe Valve; O'Mally-Beare Valve Company.

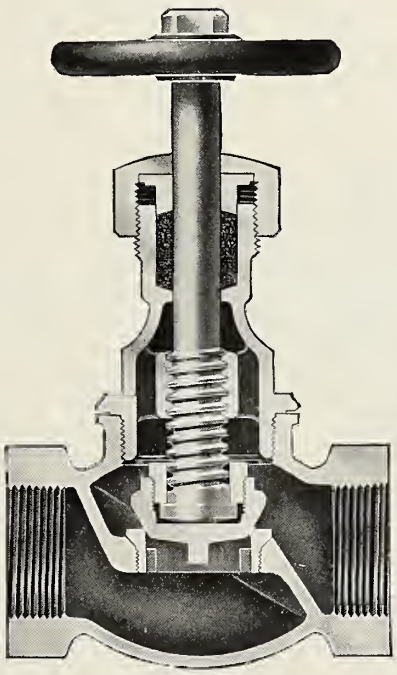

Fig. 1224—Renewable Seat Brass Globe Valve; Star Brass Manufacturing Company.

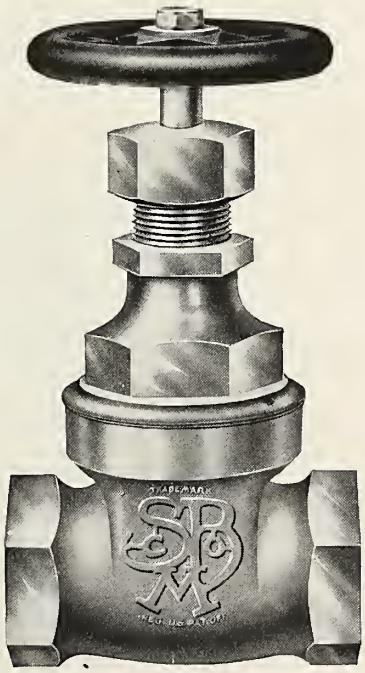

Fig. 1225—Star Monogram Gate Valve; Star Brass Manufacturing Company.

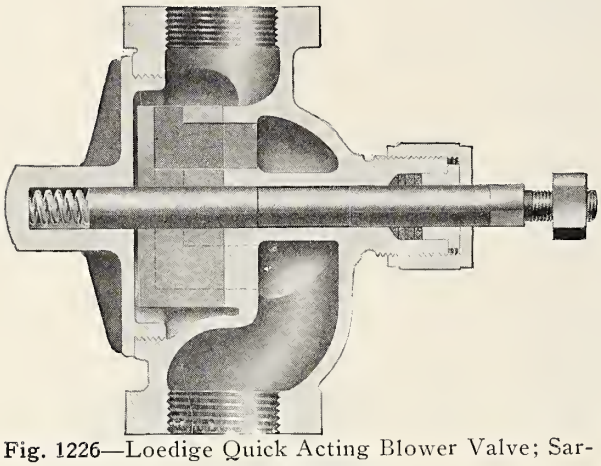

Fig. 1226—Loedige Quick Acting Blower Valve; Sargent Company.

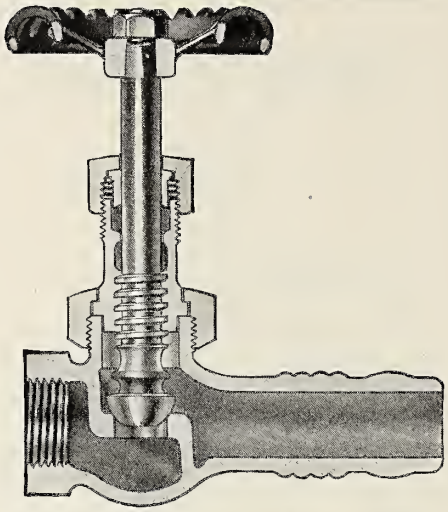

Fig. 1227—Hose Sprinkler Valve; Crane Company.

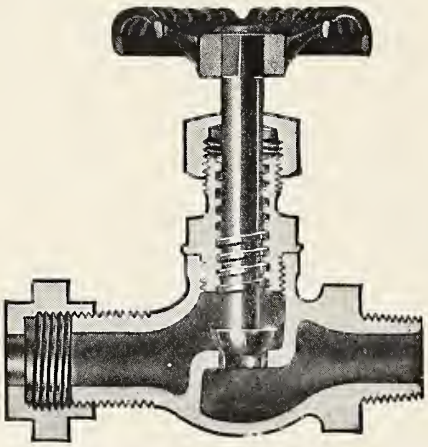

Fig. 1228—Frost Valve; Crane Company.

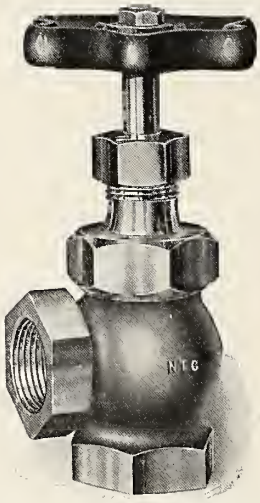

Fig. 1229 — Regrinding Angle Valve; National Tube Company.

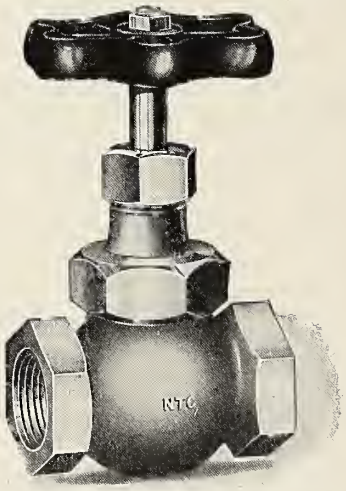

Fig. 1230—Regrinding Globe Valve; National Tube Company.

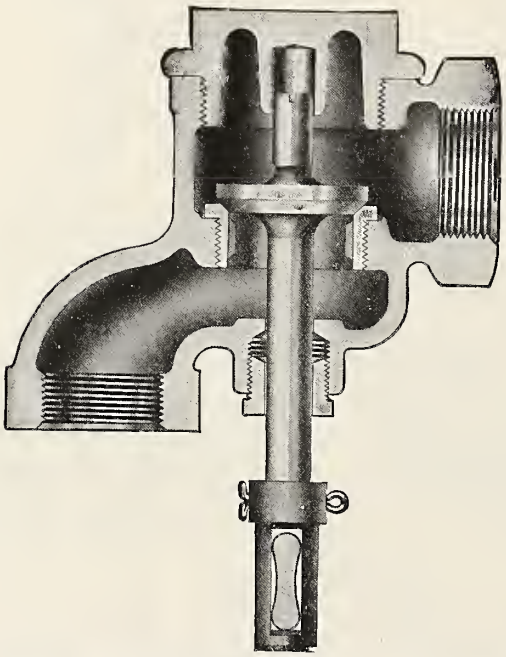

Fig. 1231—Ash Pan Blower Valve; Crane Company.

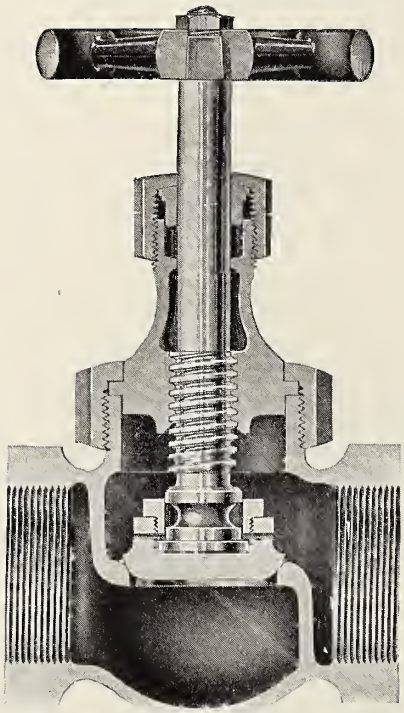

Fig. 1232—Regrinding Globe Valve; National Tube Company.

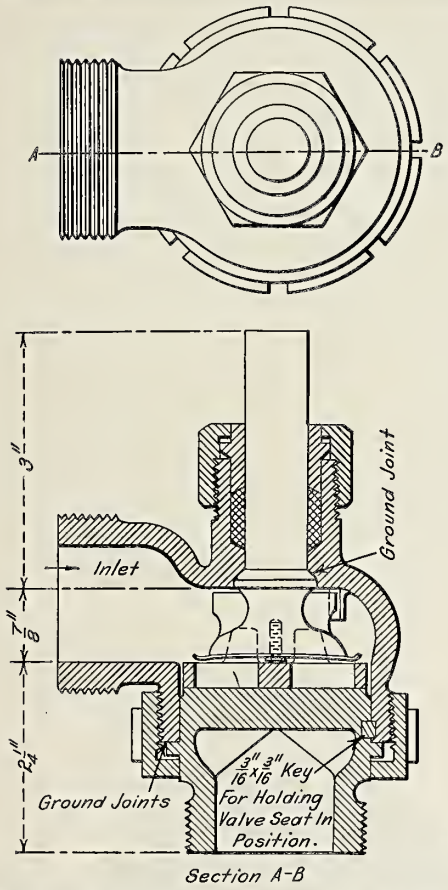

Fig. 1233—Riggin 1¼ in. Blower Valve; Pennsylvania Railroad.

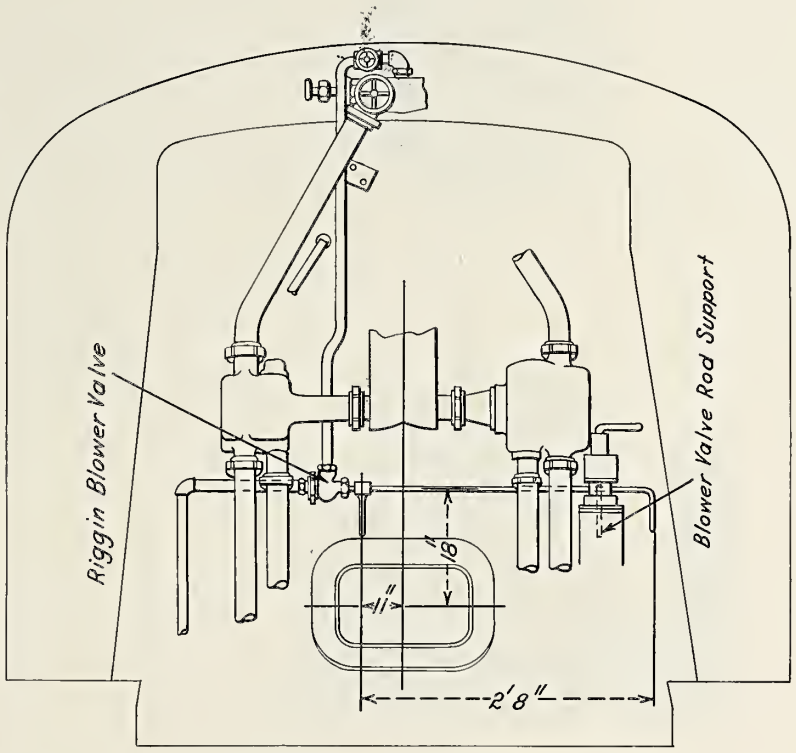

Fig. 1234—Application of Riggin 1¼ in. Blower Valve to Atlantic Type (4-4-2) Locomotive; Pennsylvania Railroad.

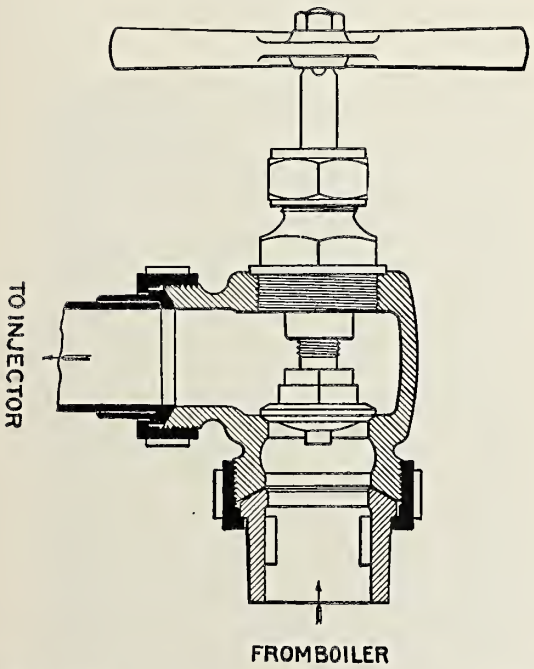

Fig. 1235—Injector Main Steam Valve; Nathan Manufacturing Company.

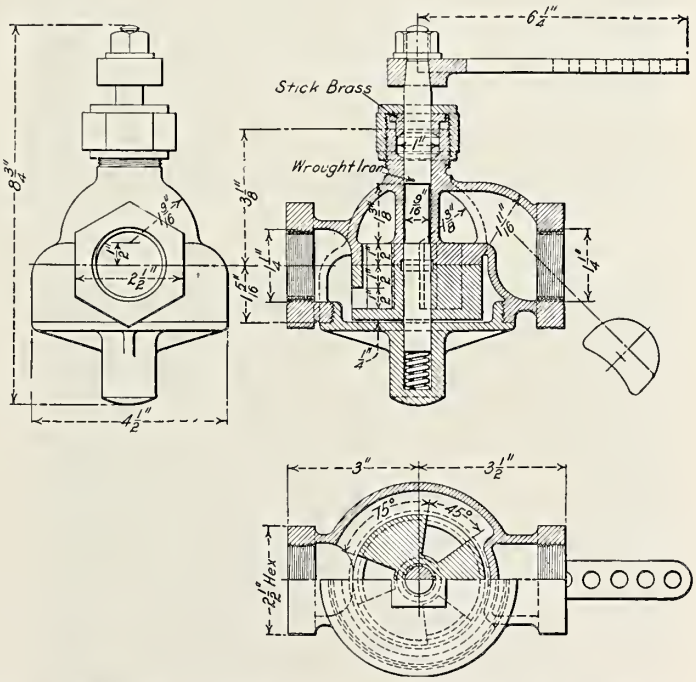

Fig. 1236—Loedige Blower Valve; Chicago & North Western.

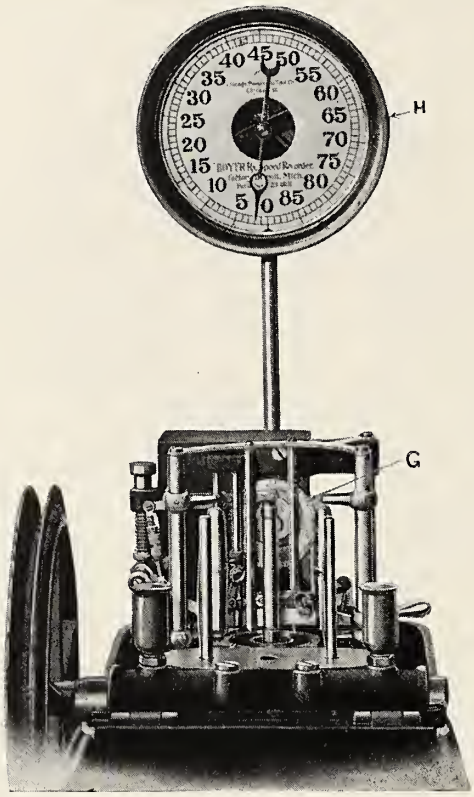

Fig. 1237—Boyer Speed Recorder with Clock Attachment; Chicago Pneumatic Tool Company.

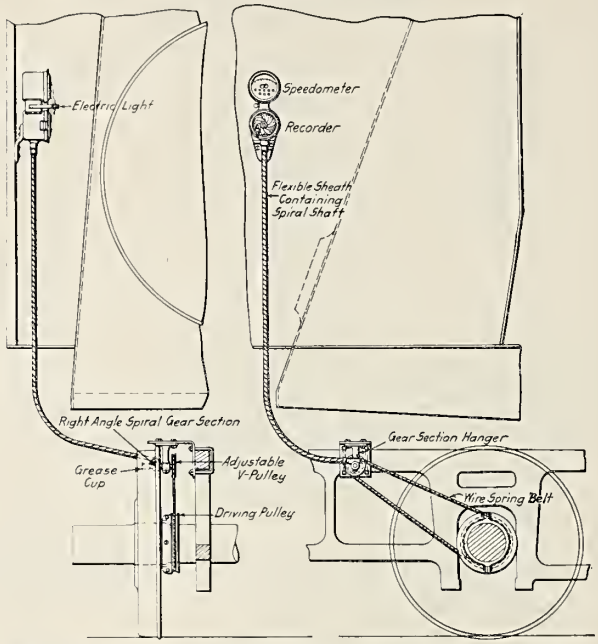

Fig. 1238—Jones Speedometer and Recorder; H. W. Johns-Manville Company.

Fig. 1240—The Servis Recorder; The Service Recorder Company.

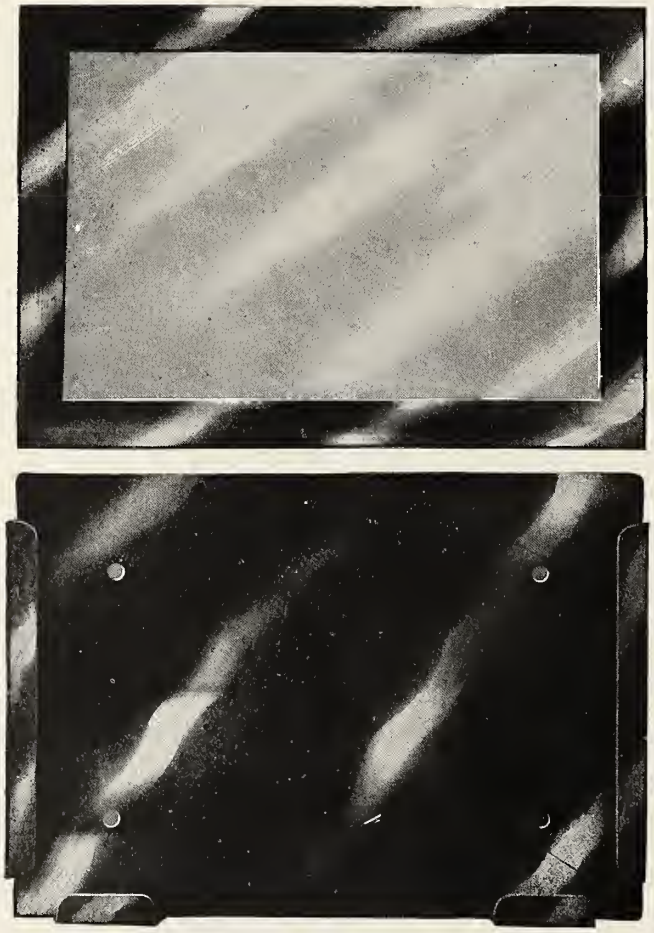

Fig. 1239—Inspection Card Holder; Adams & Westlake Company.

Fig. 1241—Application of the Servis Recorder to a Locomotive.

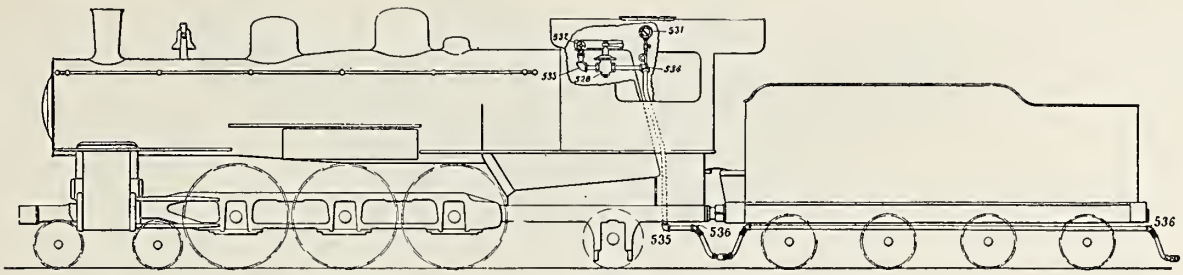

Fig. 1242—Gold's Locomotive Equipment for Car Heating.

Names of Parts of Fig. 1242.

528	*Gold Improved Pressure Regulator*	532	*Starting Valve*	535	*2-In. Ell*
531	*Steam Gage*	533	*1½-Inch Ell*	536	*2-In. x 1½-In. 65-deg. Ell*
		534	*2-In. x ¼-In. x 2-In. Tee*	552	*2-In. R. & L. Coupling*

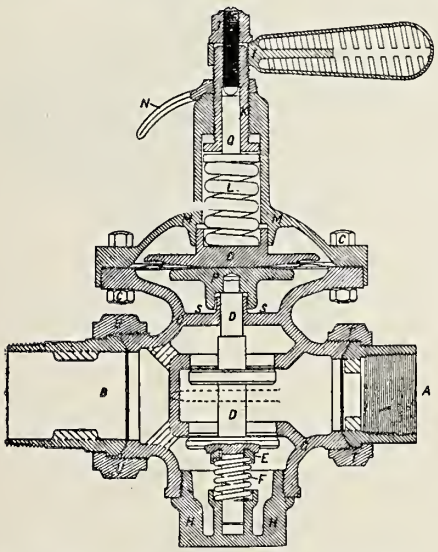

Fig. 1243—Gold's Balance Valve Steam Heat Pressure Regulator No. 528.

Names of Parts of Fig. 1243.

A	*1½-In. Inlet Union Nipple*	K	*Hollow Screw*
B	*2-In. Outlet Union Nipple*	L	*Top Spring*
C	*Bolts and Nuts for Dome and Body*	M	*Dome of Regulator*
D	*Balance Spindle with Hard Seats*	N	*Lock Nut*
E	*Oscillating Washer*	O	*Top Flange*
F	*Bottom Spring*	P	*Bottom Flange*
G	*Body of Regulator*	Q	*Top Spindle*
H	*Bottom Plug*	R	*Set Screw*
I	*Handle*	T	*1½-In. Inlet Union Nut*
J	*Top Nut*	U	*2-In. Outlet Union Nut*

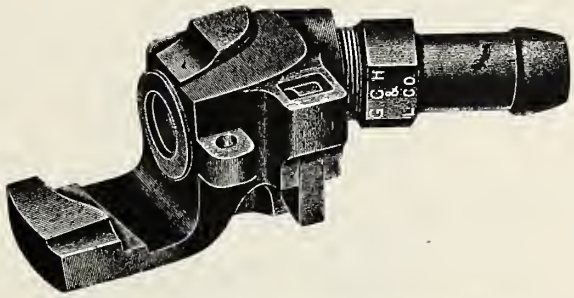

Fig. 1244—Gold's Wedge Lock Coupler.

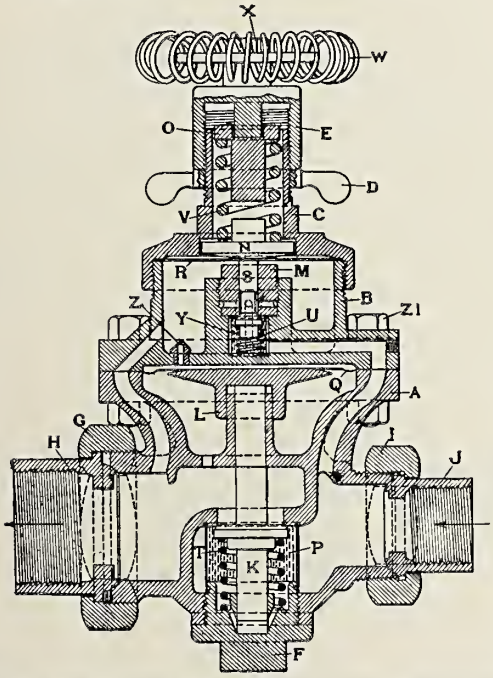

Fig. 1245—Gold's Ideal Pressure Regulator No. 874.

Names of Parts of Fig. 1245.

A	*Body*	O	*Top Spindle*
B	*Dome*	P	*Bottom Strainer*
C	*Spring Case*	Q	*Main Diaphragm*
D	*Lock Nut*	R	*Controlling Diaphragm*
E	*Adjusting Screw*	S	*Controlling Valve*
F	*Bottom Plug*	T	*Bottom Spring*
G	*Outlet Union Nut*	U	*Controlling Valve Spring*
H	*Outlet Union Nipple*	V	*Regulating Spring*
I	*Inlet Union Nut*	W	*Hand Wheel*
J	*Inlet Union Nipple*	X	*Hand Wheel Nut*
K	*Main Valve*	Y	*Top Strainer*
L	*Lower Diaphragm Plate*	Z	*Vent Plug*
M	*Controlling Valve Plug*	Z1	*Bolts and Nuts*
N	*Top Diaphragm Plate*		

Figs. 1242-1245 Refer to Gold Car Heating and Lighting Company Equipment.

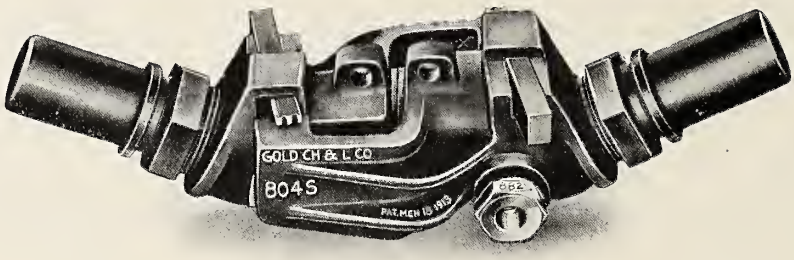

Fig. 1246—Gold's Steam Hose Coupler No. 804S.

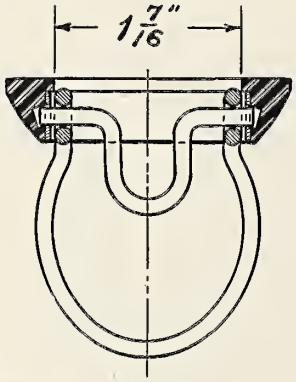

Fig. 1247—Gold's Steam Coupler Gasket No. 403B.

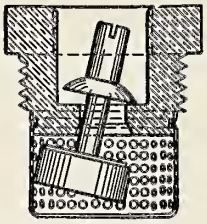

Fig. 1248—Gold's Gravity Safety Trap No. 882.

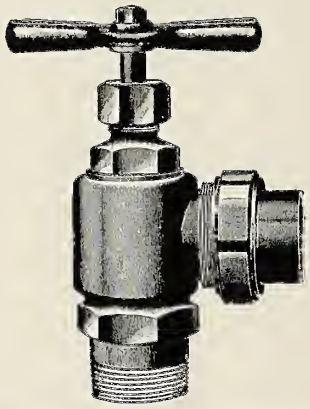

Fig. 1249—Gold's Starting Valve No. 532.

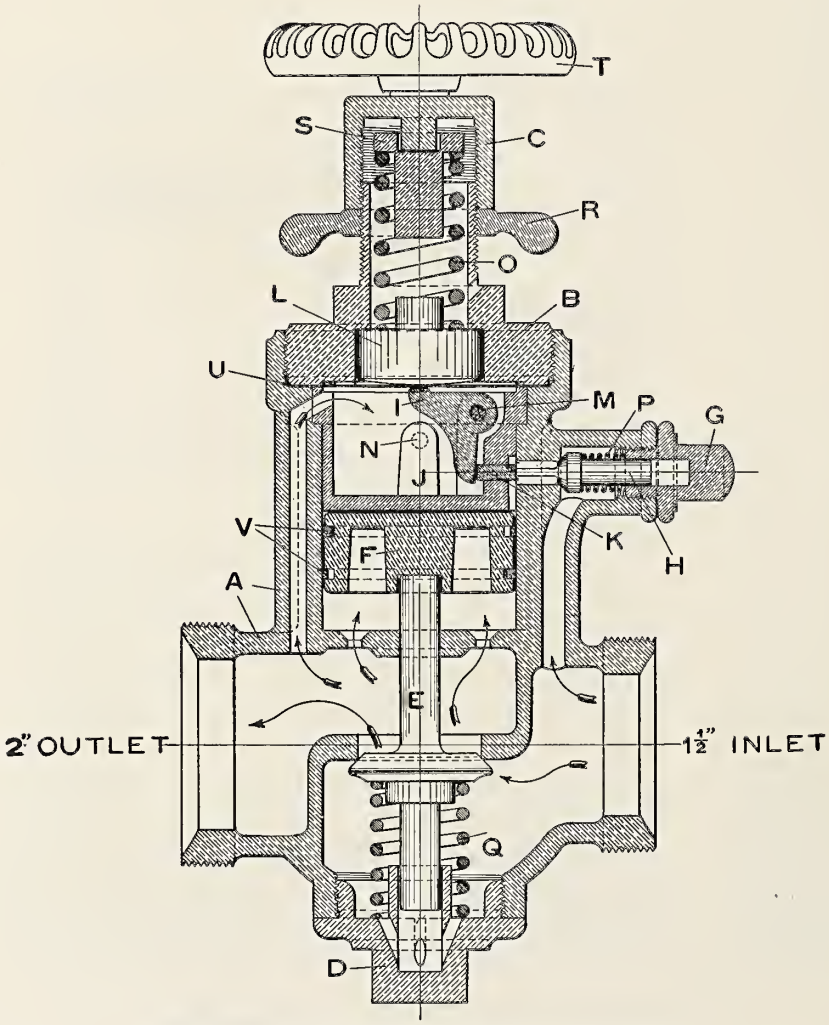

Names of Parts of Fig. 1250.

A *Body*
B *Dome*
C *Adjusting Screw.*
D *Bottom Plug*
E *Main Valve*
F *Piston*
G *Control Valve Cap*
H *Control Valve Stem*
I *Bell Crank*
J *Bell Crank Case*
K *Valve Pin*
L *Diaphragm Plate*
M *Bell Crank Screw*
N *Stop Screw*
O *Regulatng Spring*
P *Control Valve Spring*
Q *Bottom Spring*
R *Lock Nut*
S *Top Spindle*
T *Hand Wheel*
U *Diaphragm*
V *Piston Rings*

Fig. 1250—Gold's Pressure Regulator No. 1014.

Figs. 1246-1250 Refer to Gold Car Heating and Lighting Company Equipment.

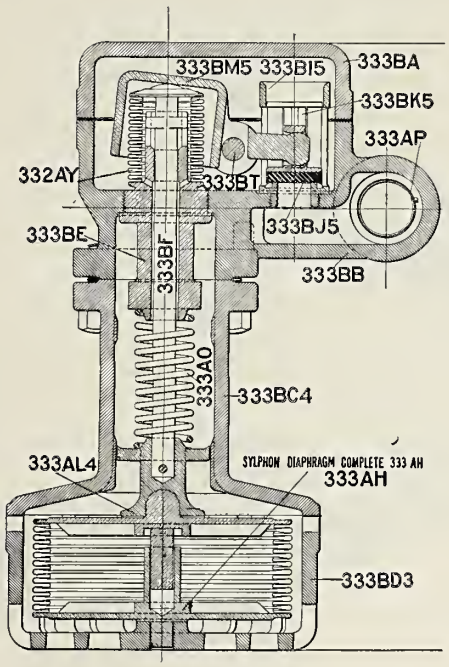

Fig. 1251—Vapor Trap No. 333 Employing the Sylphon Bellows Diaphragm and the Sylphon Flexible Packless Connection for the Piston Operating the Valve.

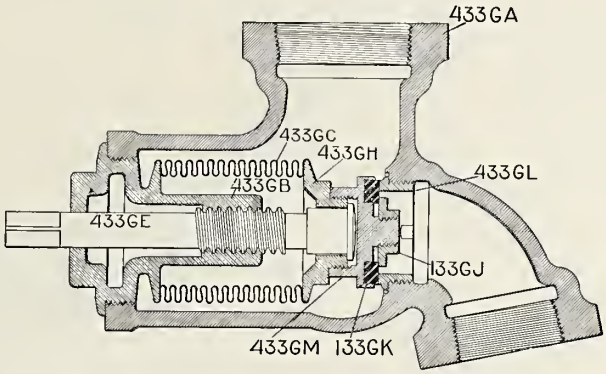

Fig. 1252—Sylphon Packless Train Line End Valve No. 433.

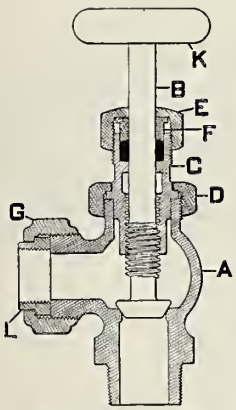

Fig. 1253—Throttle Valve No. 11.

Names of Parts of Fig. 1253.

A *Body*
B *Stem*
C *Bonnet*
D *Bonnet Nut*
E *Stuffing Box Nut*
F *Stuffing Box Gland*
G *Union Nut*
K *Valve Handle*
L *Union Collar*

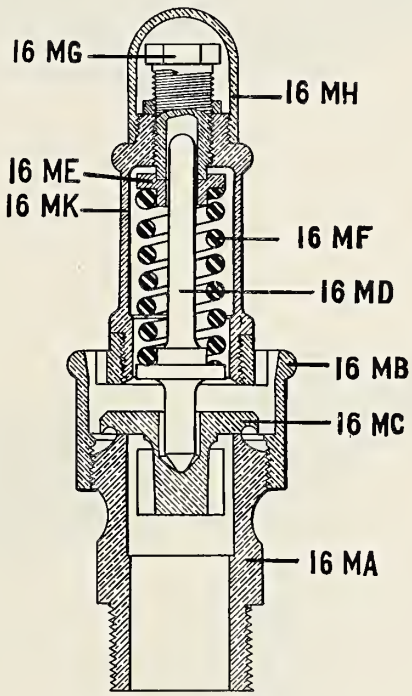

Fig. 1254—Engine Relief Valve No. 16.

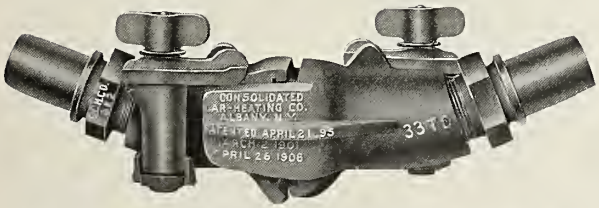

Fig. 1255—Pair of 33 T. D. X. Coupler Heads with Straight Shank Nipple and Positive Butterfly Lock. Designed for High Steam Pressure and Metallic Hose.

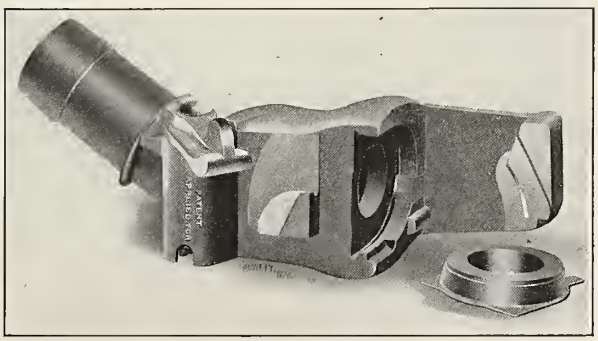

Fig. 1256—Consolidated Steam Coupler No. 33TD.

Figs. 1251-1256 Refer to Consolidated Car Heating Company Equipment.

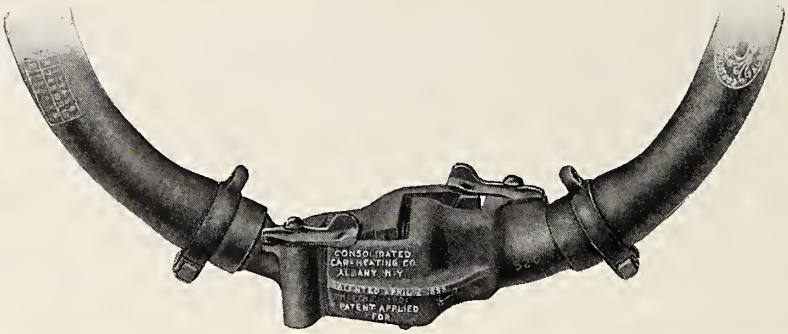

Fig. 1257—Pair of No. 52 Couplers for Interchanging with Large 1½ in. Heads.

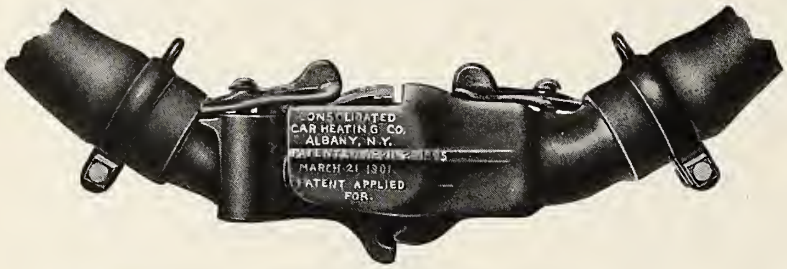

Fig. 1258—Pair of Consolidated Steam Couplers No. 33TD, Locked.

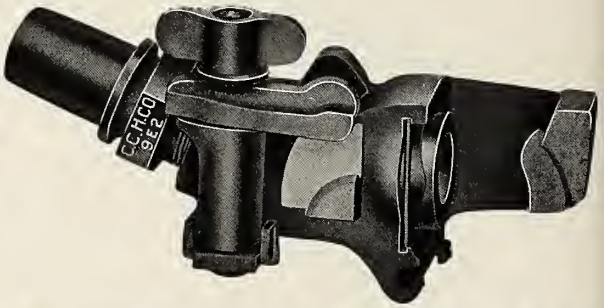

Fig. 1259—Coupler Heads No. 33 T. D. X. with Straight Shank Nipple and Positive Butterfly Lock.

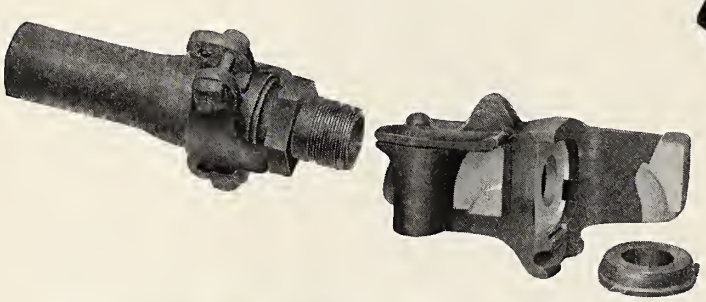

Fig. 1260—Steam Coupler No. 33 T. D. with Gasket No. 33K and Straight Shank Hose No. 9E2 on which is Mounted Hose Held by Two-piece Hose Band No. 9J3.

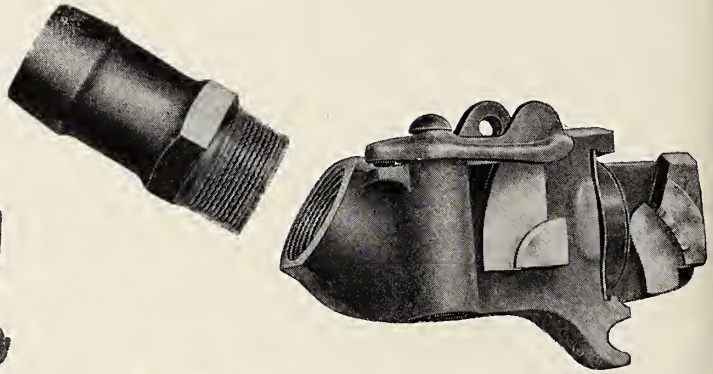

Fig. 1261—Two-piece Coupler Head.

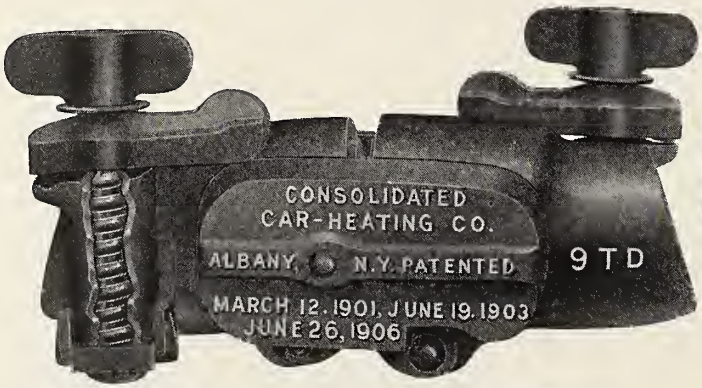

Fig. 1262—Pair of Coupler Heads No. 9 T. D. X. with Positive Butterfly Nut Locking Arrangement for Use with Metallic Connections.

Fig. 1263—Two-piece Hose Band No. 9J3 for Use with Straight Shank Nipple No. 9E2.

Figs. 1257-1263 Refer to Consolidated Car Heating Company Equipment.

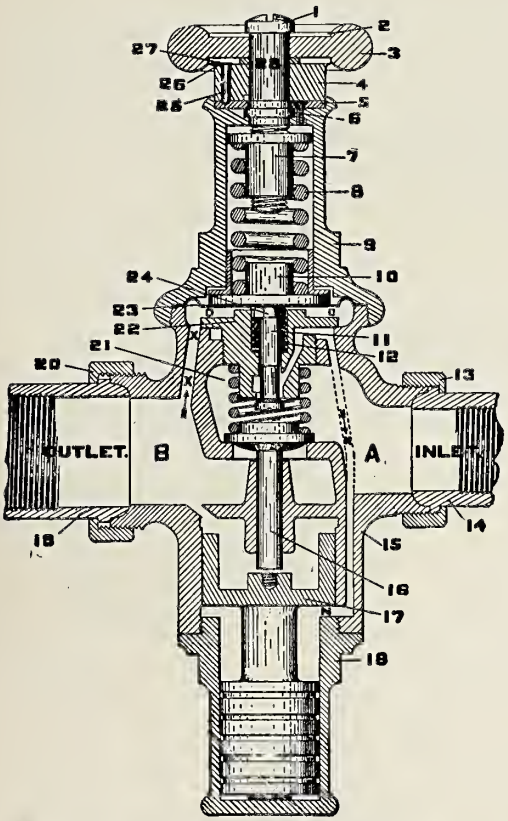

Fig. 1264—Pressure Reducing Valve No. 22 for Steam Heat; Consolidated Car Heating Company.

Names of Parts of Reducing Valve, Fig. 1264.

1	*Wheel Screw*	15	*Body*
2	*Wheel Plate*	16	*Main Valve*
3	*Wheel*	17	*Piston*
4	*Wheel Hub*	18	*Dash Pot*
5	*Locking Plate*	19	*Outlet Tail Piece*
6	*Locking Plate Screw*	20	*Outlet Union Nut*
7	*Compression Nut*	21	*Main Valve Spring*
8	*Diaphragm Spring*	22	*Auxiliary Valve Seat*
9	*Spring Case*	23	*Diaphragm*
10	*Diaphragm Button*	24	*Auxiliary Valve Nut*
11	*Auxiliary Valve*	25	*Locking Pin*
12	*Auxiliary Valve Spring*	26	*Locking Spring*
13	*Inlet Union Nut*	27	*Locking Spring Screws*
14	*Inlet Tail Piece*	28	*Compression Screw*

Fig. 1265—Mason Locomotive Reducing Valve for Steam Heat; Mason Regulator Company.

Names of Parts of Fig. 1266.

1 *Wheel Screw*
2 *Wheel Plate*
3 *Wheel*
4 *Wheel Hub*
5 *Locking Plate*
6 *Locking Plate Screw*
7 *Compression Nut*
8 *Diaphragm Spring*
9 *Spring Case*
10 *Diaphragm Button*
11 *Auxiliary Valve*
12 *Auxiliary Valve Spring*
13 *Inlet Union Nut*
14 *Inlet Tail Piece*
15 *Body*
16 *Main Valve*
17 *Piston*
18 *Dash Pot*
19 *Outlet Tail Piece*
20 *Outlet Union Nut*
21 *Main Valve Spring*
22 *Auxiliary Valve Seat*
23 *Diaphragm*
24 *Auxiliary Valve Nut*
25 *Locking Pin*
26 *Locking Spring*
27 *Locking Spring Screws*
28 *Compression Screw*

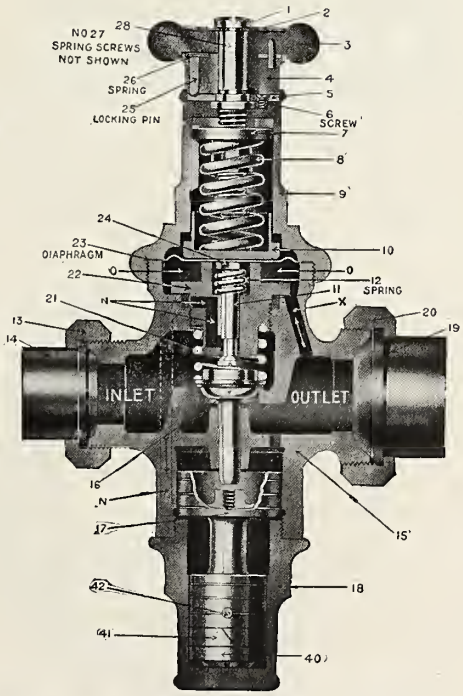

Fig. 1266—Mason Locomotive Reducing Valve for Steam Heat; Mason Regulator Company.

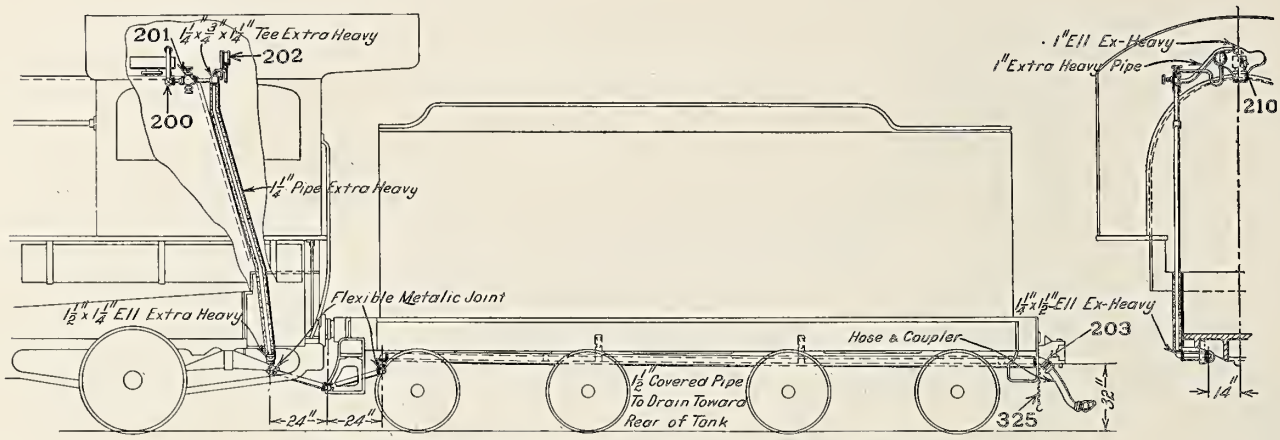

Fig. 1267—Chicago Locomotive Equipment for Car Heating.

Names of Parts of Fig. 1267.

200	*Stop Valve*	202	*Steam Gage*	210	*Heavy Nipple*
201	*Pressure Regulator*	203	*Special C. I. Ell*	325	*Coupler Chain*

Names of Parts of No. 280 Reducing Valve, Fig. 1268.

A	*Body*	O	*Compression Spring*
B	*Bonnet*	P	*Piston*
C	*Hand Wheel*	Q	*Piston Rings*
D	*Piston Nut*	R	*Main Valve Spring*
E	*Main Valve Nut*	S	*Auxiliary Valve Spring*
F	*Auxiliary Valve Nut*	T	*Small Compression Spring*
G	*Main Valve*	U	*Wheel Hub*
H	*Auxiliary Valve*	V	*Main Valve Spring End*
J	*Diaphragm Plate*	W	*Diaphragm*
K	*Diaphragm Pin*	X	*Tail Piece Nut*
L	*Bell Crank*	Y	*Tail Piece*
M	*Diaphragm Button*	Z	*Lock Nut*
N	*Compression Spring Plate*		

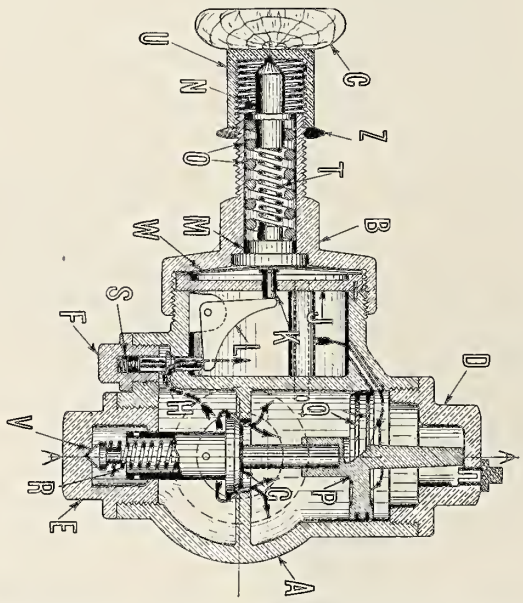

Fig. 1268—Steam Heat Pressure Reducing Valve No. 280.

Names of Parts of Fig. 1269.

A	*Wheel*	F	*Union Ring*
B	*Stuffing Box*	G	*Union Tail*
C	*Gland*	H	*Disc Ring*
D	*Stem*	J	*Disc*
E	*Bonnet*	K	*Body*

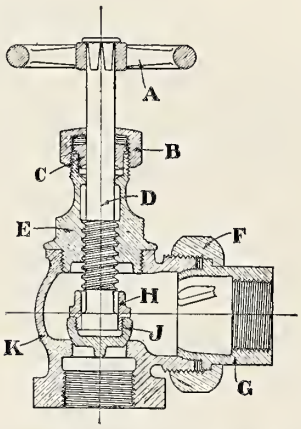

Fig. 1269—Steam Heat Stop Valve.

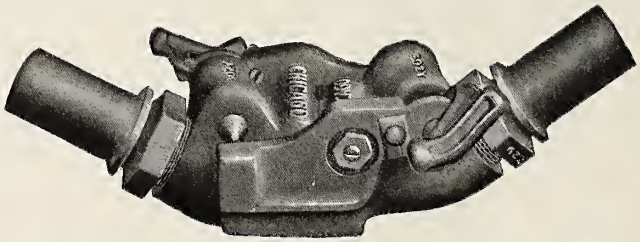

Fig. 1270—Pair of Chicago Coupler Heads No. 302, Locked.

Figs. 1267-1270 Refer to Chicago Car Heating Company Equipment.

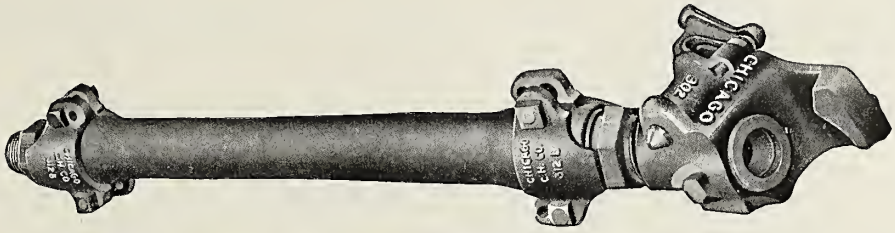

Fig. 1271—Chicago Steam Coupler No. 302 for Two-piece Hose Clamp.

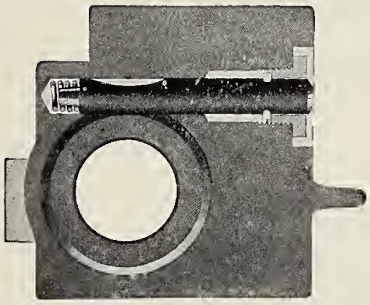

Fig. 1272—Chicago Steam Coupler Gasket Locked in Place.

Fig. 1273—Gasket for No. 302 Chicago Steam Coupler.

Fig. 1274—One Side of Two-piece Hose Clamp.

Fig. 1275—Two-piece Hose Clamp.

Fig. 1276—Bushing for Retaining Bolt.

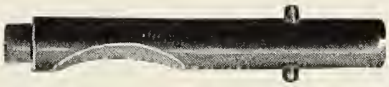

Fig. 1277—Gasket Retaining Bolt.

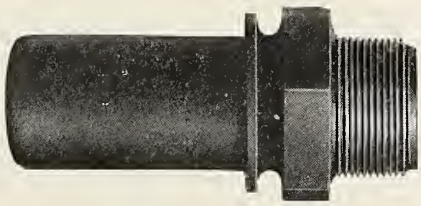

Fig. 1278—Hose Nipple.

Figs. 1272-1278 are Details of the Chicago Steam Coupler No. 302; Chicago Car Heating Company.

Fig. 1279—Star Special Car Heating Steam Gage; Star Brass Manufacturing Company.

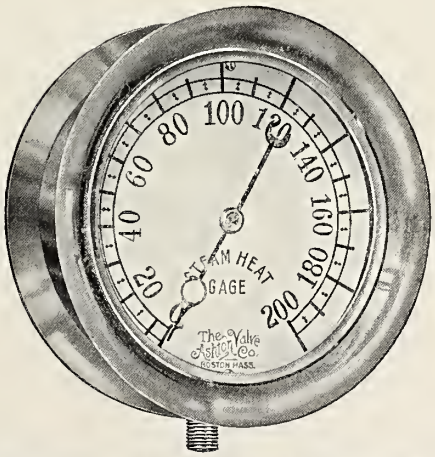

Fig. 1280—Steam Heat Gage; Ashton Valve Company.

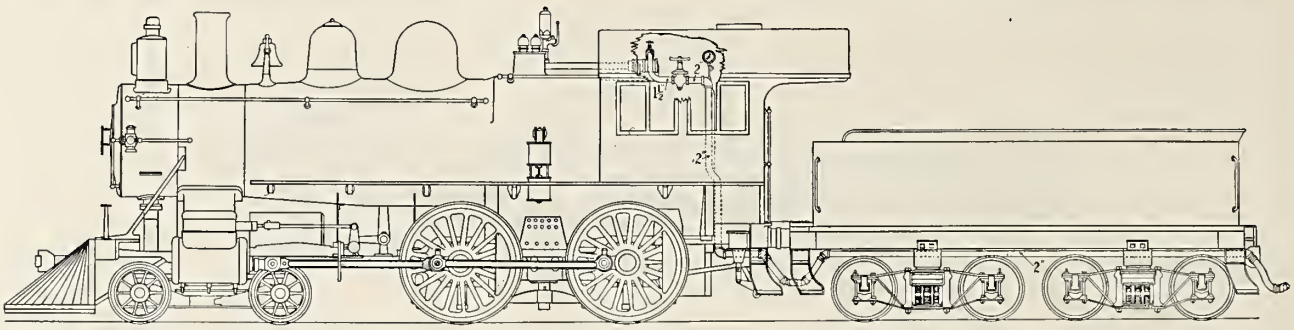

Fig. 1281—Standard Locomotive Equipment for Car Heating.

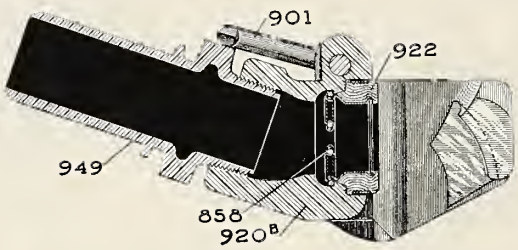

Fig. 1282—Steam Hose Coupler No. 920B.

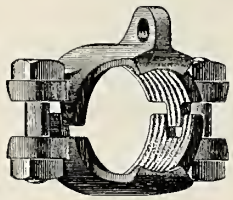

Fig. 1283—Hose Clamp Nos. 948-948a.

Names of Parts of Fig. 1285.

A *1½-Inch Inlet Union Nipple*

B *2-Inch Outlet Union Nipple*

C *Bolts and Nuts for Dome and Body*

D *Balance Spindle with Hard Seats*

E *Oscillating Washer*

F *Bottom Spring*

G *Body of Regulator*

H *Bottom Plug*

I *Handle*

J *Top Nut*

K *Hollow Screw*

L *Top Spring*

M *Dome of Regulator*

N *Lock Nut*

O *Top Flange*

P *Bottom Flange*

Q *Top Spindle*

T *1½-Inch Inlet Union Nut*

U *2-Inch Outlet Union Nut*

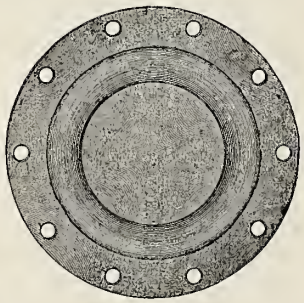

Fig. 1284—Phosphor-Bronze Diaphragm for Pressure Regulator.

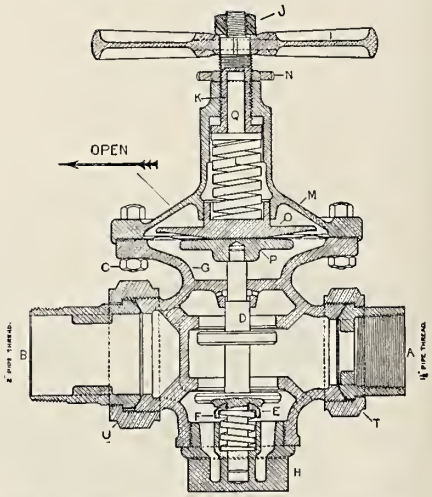

Fig. 1285—Steam Heat Pressure Regulator.

Figs. 1281-1285 Refer to Standard Heat & Ventilation Company Equipment

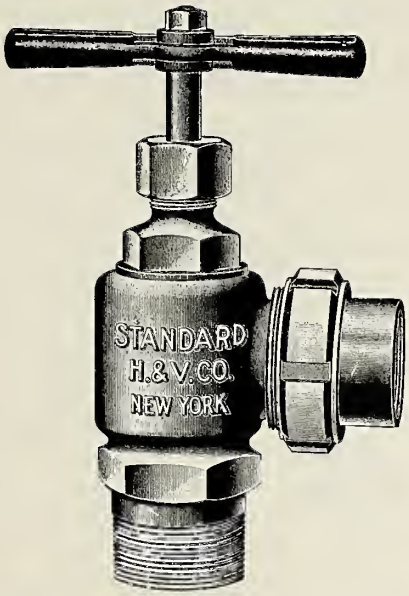

Fig. 1286—Starting Valve No. 18; Standard Heat & Ventilation Company.

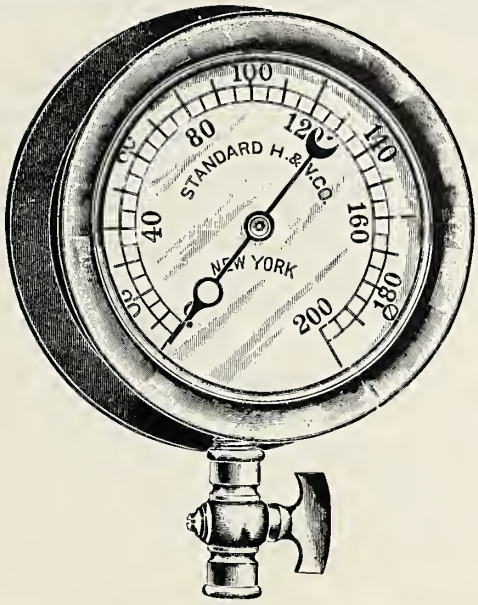

Fig. 1287—Steam Heat Gage No. 17; Standard Heat & Ventilation Company.

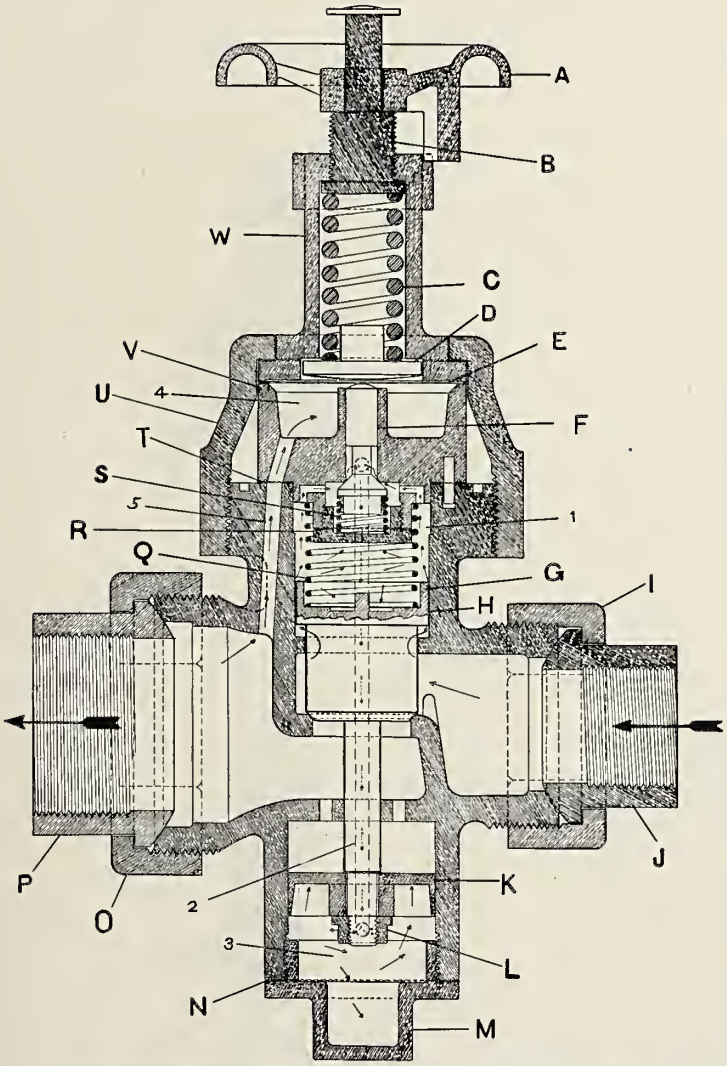

Fig. 1288—Pressure Regulator; The Greenlaw Manufacturing Company.

Names of Parts of Fig. 1288.

A *Handwheel*
B *Adjusting Screw*
C *Adjusting Spring*
D *Diaphragm Button*
E *Diaphragm*
F *Auxiliary Piston*
G *Main Piston*
H *Body*
I *Inlet Union Nut*
J *Inlet Union End*
K *Dash Pot Piston*
L *Dash Pot Piston Nut*
M *Dash Pot Chamber Nut*
N *Lower Gasket*
O *Outlet Union Nut*
P *Outlet Union End*
Q *Main Piston Spring*
R *Auxiliary Spring Cap*
S *Auxiliary Piston Spring*
T *Upper Gasket*
U *Bonnet*
V *Auxiliary Piston Case*
W *Spring Case*

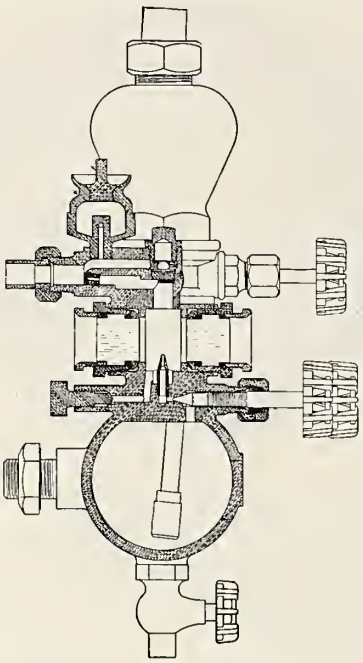

Fig. 1289—Section of Michigan Triple Feed Lubricator; Michigan Lubricator Company.

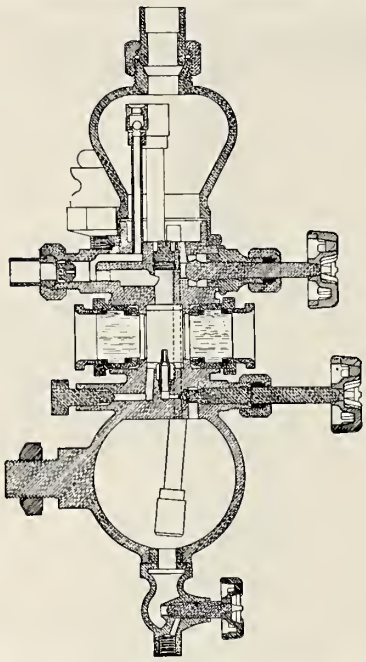

Fig. 1290—Section of Michigan Triple Feed Lubricator; Michigan Lubricator Company.

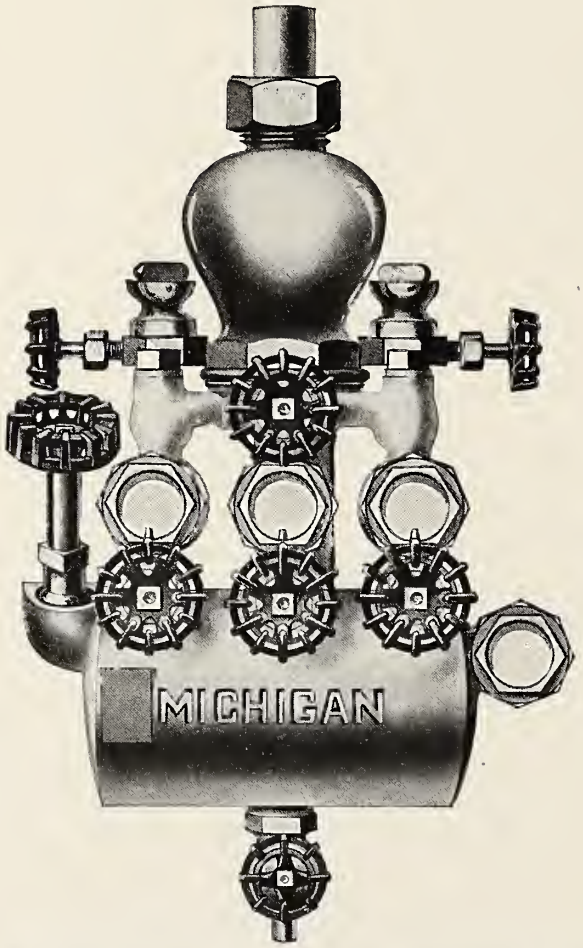

Fig. 1291—Michigan Triple Feed Lubricator; Michigan Lubricator Company.

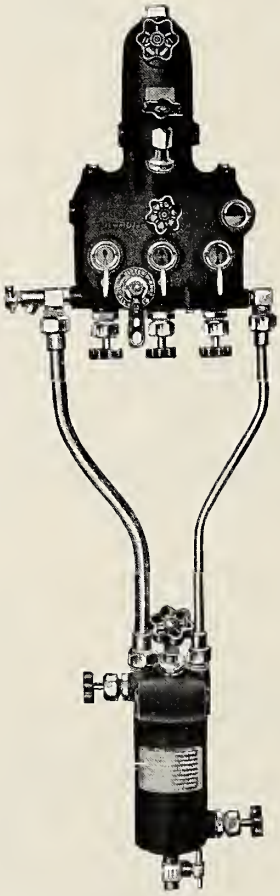

Fig. 1292—Detroit Transfer Filler Attached to No. 22 Lubricator. For Refilling Lubricator While in Service; Detroit Lubricator Company.

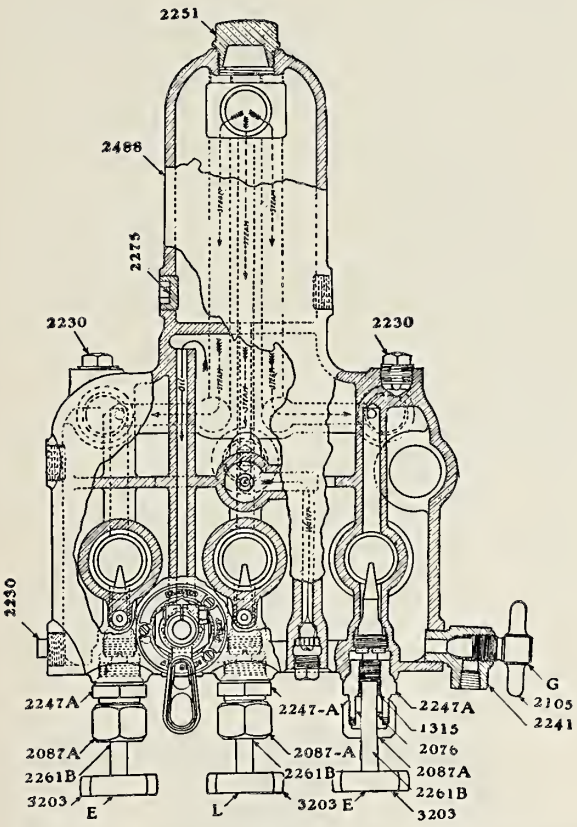

Fig. 1293—Detroit No. 22 Triple Feed Lubricator, Front Section.

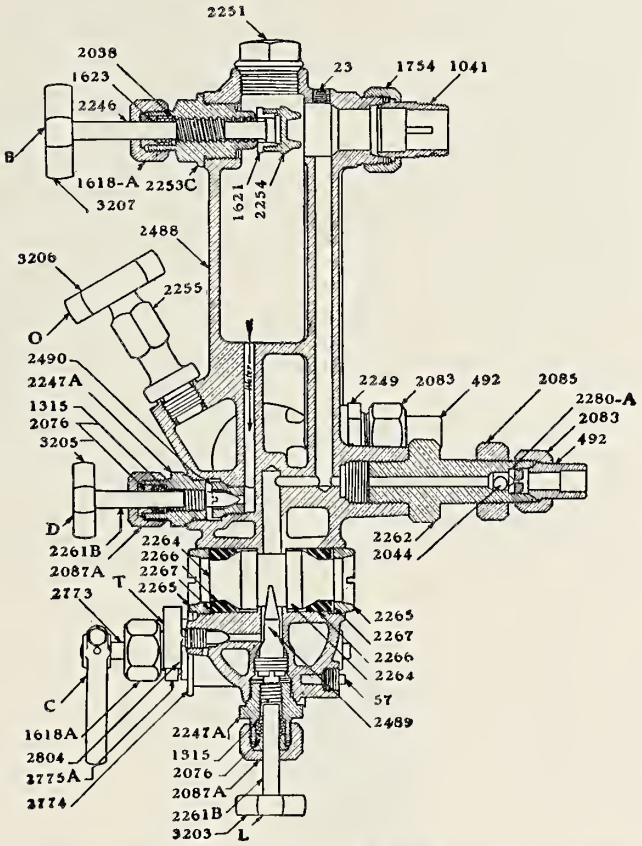

Fig. 1294—Detroit No. 22 Triple Feed Lubricator, Side Section.

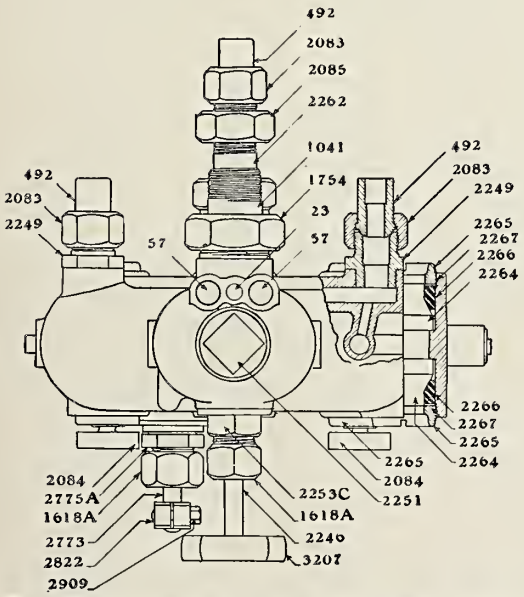

Fig. 1295—Detroit No. 22 Triple Feed Lubricator, Plan.

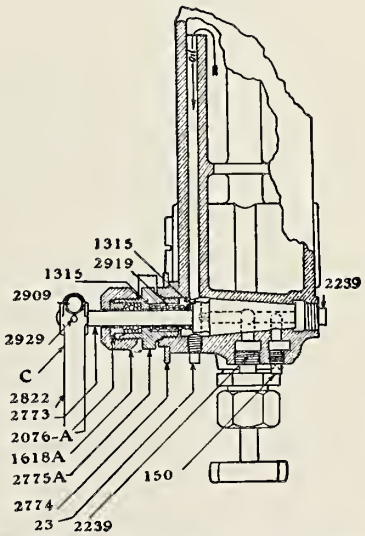

Fig. 1296—Detroit No. 22 Triple Feed Lubricator, Section Through Oil Control Valve.

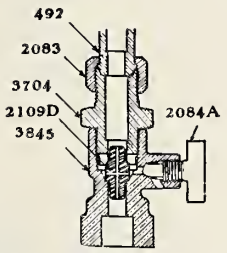

Fig. 1297—Detroit Automatic Steam Chest Plug.

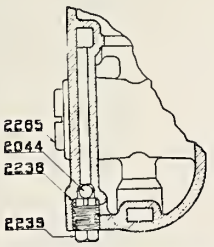

Fig. 1298—Detroit No. 22 Triple Feed Lubricator, Section.

Figs. 1293-1298 Refer to Detroit Lubricator Company Equipment.

Numbers Refer to Names of Parts on Page 538.

Names of Parts of Figs. 1293-1298

23	*Blind Plug*
57	*Blind Plug*
150	*Plug*
492	*Tail Pipe*
1041	*Tail Pipe*
1315	*Feed Stem Ring*
1618A	*Valve Packing Nut*
1621	*Steam Valve Disc Lock Nut*
1623	*Steam Valve Gland*
1754	*Tail Nut*
2038	*Steam Valve Packing Ring*
2044	*Brass Ball*
2076	*Feed Valve Gland*
2076A	*Control Valve Gland*
2083	*Tail Nut*
2084	*Vent Stem*
2085	*Support Arm Jamb Nut*
2087A	*Feed Valve Stem Nut*
2105	*Drain Stem*
2230	*Plug*
2238	*Water Check Stop*
2239	*Plug*
2241	*Drain Valve Body*
2246	*Steam Valve Stem*
2247A	*Feed Valve Centerpiece*
2249	*Tail Pipe Centerpiece*
2251	*Condenser Plug*
2253C	*Steam Valve Centerpiece*
2254	*Steam Valve Disc*
2255	*Filler Plug, Complete*
2261B	*Feed Valve Stem*
2262	*Support Arm*
2264	*Sight Feed Glass*
2265	*Feed Glass Packing Ring*
2266	*Feed and Gage Glass Rubber Packing*
2267	*Feed Glass Washer*
2280A	*Air Pump Choke Seat*
2489	*Feed Nozzle, Complete*
2490	*Water Valve Seat*
2773	*Control Valve Plug*
2774	*Control Valve Dial Plate*
2775A	*Control Valve Centerpiece*
2822	*Control Valve Handle*
2909	*Cap Screw*
2919	*Control Valve Spring*
2929	*Taper Pin*
3203	*Feed and Water Valve Handle*
3205	*Water Valve Handle*
3206	*Filler Plug Handle*
3207	*Steam Valve Handle*

Fig. 1299—Detroit No. 22 Triple Feed Lubricator.

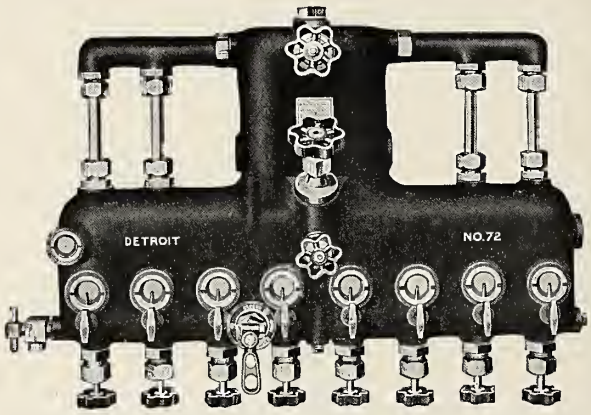

Fig. 1300—Detroit No. 72 Eight Feed Lubricator.

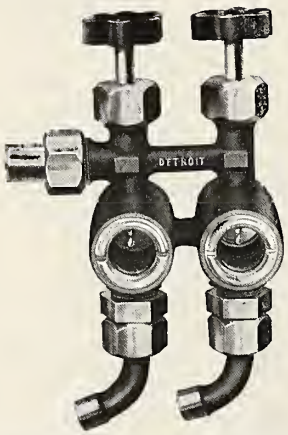

Fig. 1301—Detroit Double Feed Air Cylinder Lubricator.

Names of Parts of Fig. 1302

LA1	*Body*
LA4	*Angle Union Tail Pipe*
LA5	*Feed Nozzle*
LA11	*Jamb Nut*
496	*Union Tail Pipe*
1315	*Feed Stem Ring*
2076	*Feed Valve Gland*
2083	*Union Nut*
2087	*Valve Stem Packing Nut*
2261	*Feed Valve Stem*
2264	*Sight Feed Glass*
2265	*Sight Feed Glass Packing Ring*
2266	*Sight Feed Glass Rubber Packing*
2267	*Sight Feed Glass Washer*
2284	*Feed Valve Handle*

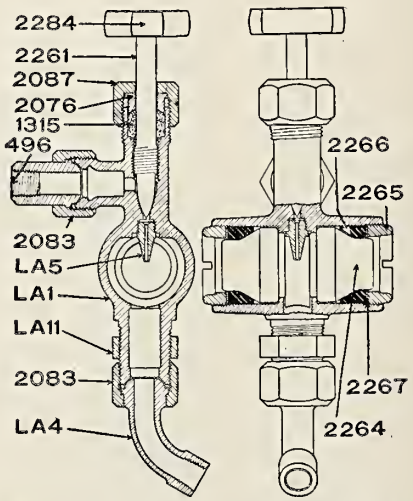

Fig. 1302—Detroit Single Feed Air Cylinder Lubricator.

Figs. 1299-1302 Refer to Detroit Lubricator Company Equipment.

Names of Parts of Fig. 1303.

A *Filler Plug*
B *Body*
C *Interior Tube*
D *Piston*
E *Graphite Valve*
F *Steam Valve*
G *Support Post*
H *Automatic Feed Valve*
I *Automatic Water Valve*
J *Connection to Steam Chest*
K *Connection to Tallow Pipe*
L *Jamb Nut*
M *Drain Valve*

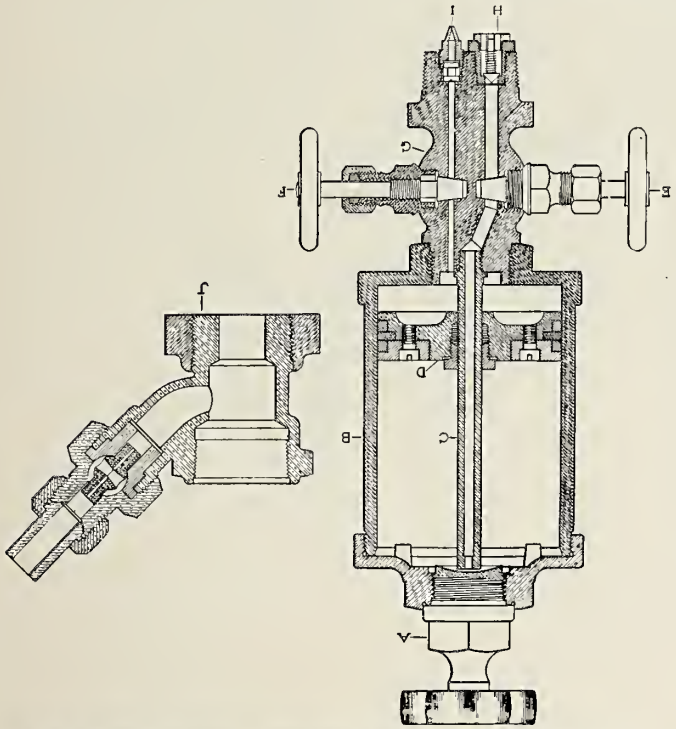

Fig. 1303—Detroit Graphite Lubricator. To be Attached Directly to the Steam Chest; Detroit Lubricator Company.

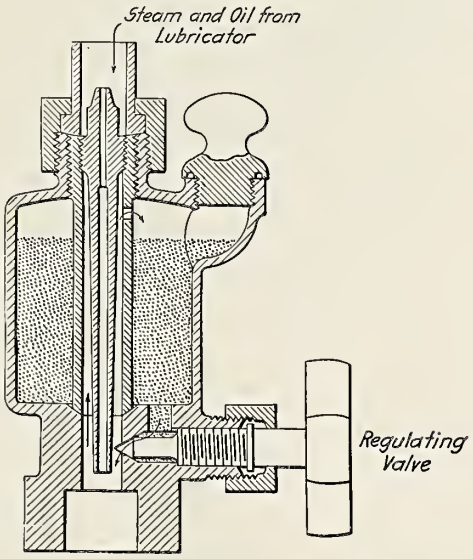

Fig. 1304—Graphite Lubricator; Graphite Lubricator Company.

Names of Parts of Fig. 1305.

4 *Check Valve*
6 *Pipe Union Nut for Steam Chest Circulating Pipe*
7 *Pipe Union Nut for Air Pump Circulating Pipe*
8 *Steam Supply Union*
9 *Steam Supply Nipple*
10 *Cap Plug for Pipe T, Nos.* 91 *and* 101.
23 *Filler Plug*
24 *Handle for Valve Stems*
30 *Feed Valve Packing Nut*
31 *Feed Valve*
33 *Drain Valve*
34 *Drain Valve Plug for Oil Bowl*
35 *Tallow Pipe Union*
36 *Choke Plug for Air Pump Feed*
38 *Mounting Stud Lock Nut*
51 *Feed Valve with Regulating Attachment*
52 *Packing Nut for Regulating Attachment*
53 *Jamb Nut for Regulating Attachment*
54 *Auxiliary Handle for Regulating Attachment*
55 *Cap for Steam Chest Valve*
56 *Casing for Steam Chest*
57 *Valve for Steam Chest*
58 *Steam Chest Valve*
62 *Pressure Valve and Nut*
64 *Pipe Plug*
65 *Auxiliary Oil Cup*
66 *Auxiliary Oil Cup Filler Plug*
67 *Cap Plug*
68 *Oil Pipe Bushing for Air Pump Feed*
69 *Packing Nut for Glass*
70 *Follower Ring and Washer for Solid Glasses (Chicago Composition)*
71 *Condenser*
73 *Water Valve*
75 *Connecting Nut for T, Nos.* 91 *and* 101.
76 *Ball Joint for T, Nos.* 91 *and* 101
77 *Feed Valve Hub*
78 *Auxiliary Oil Cup Feed Valve, Complete*
79 *Pressure Valve Hub*
80 *Solid Glasses for Feed Pocket or Index*
81 *Feed Tip*
82 *Circulating Pipe Complete for Air Pump*
84 *Pipe Hub Air Pump and Low Pressure Circulating Pipe*
85 *Pipe Hub for Steam Chest Circulating Pipe*
88 *Auxiliary Oil Cup Drain Valve*
89 *Gaskets for Solid Glasses*
91 *Pipe Connecting T*
92 *Secondary Pipe T*
57 *Valve for Steam Chest Valve*
97 *Cap for Steam Chest Valve*
98 *Casing for Steam Chest*
99 *Steam Chest Valve*
101 *Pipe T*
104 *Water Pipe in Condenser*
171 *Oil Bowl*
172 *Feed Arm for Low Pressure, right side*
172 *Feed Arm for Low Pressure, left side*
173 *High Pressure Circulating Pipe*
174 *Low Pressure Circulating Pipe*
175 *Low Pressure Feed Spindle*
176 *High Pressure Feed Spindle*
177 *Oil Pipe for Air Pump and High Pressure Feeds*
178 *Oil Bowl Drain Valve Connection*
179 *Drain Valve Pipe Nut*
180 *Drain Valve Pipe Nut Ring*
181 *Oil Bowl*
219 *Tee Connection for Steam Chest Valves*

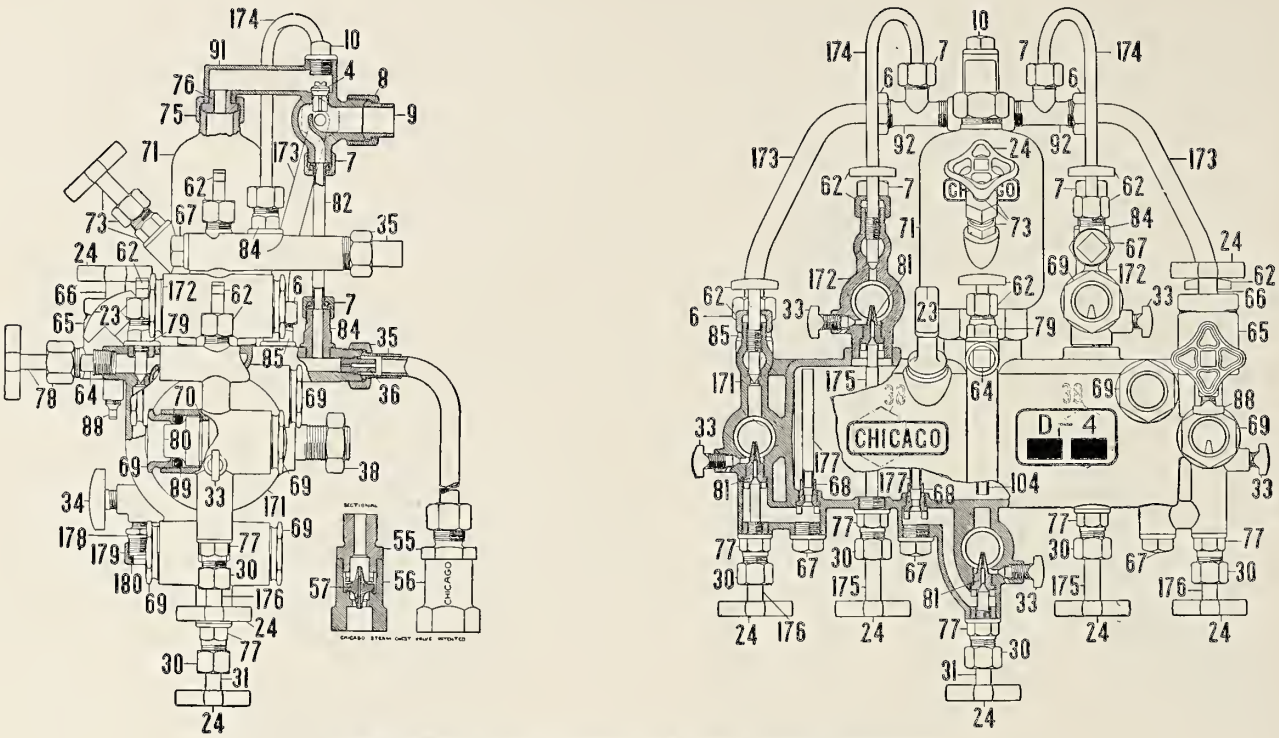

Fig. 1305—Chicago Class D4 Five Feed Lubricator

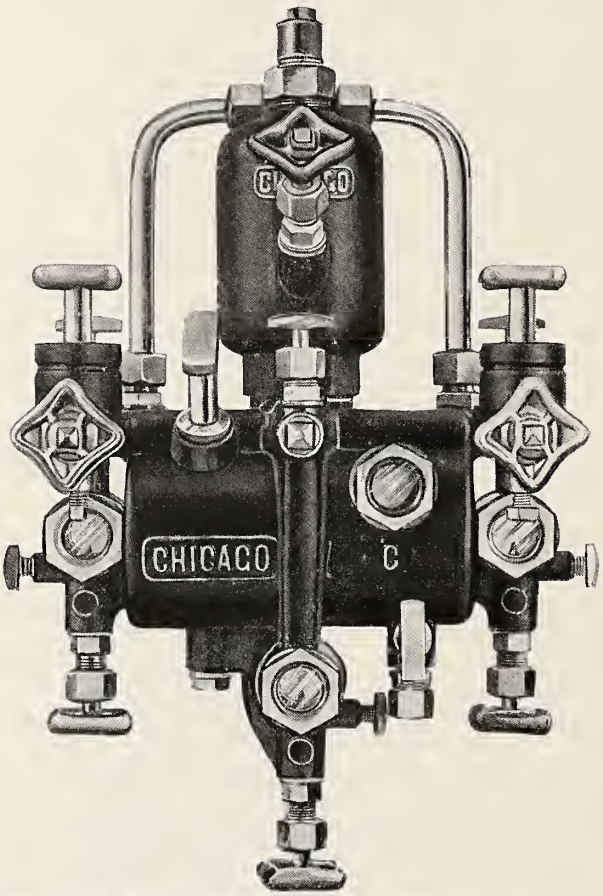

Fig. 1306—Chicago Class C Triple Feed Lubricator.

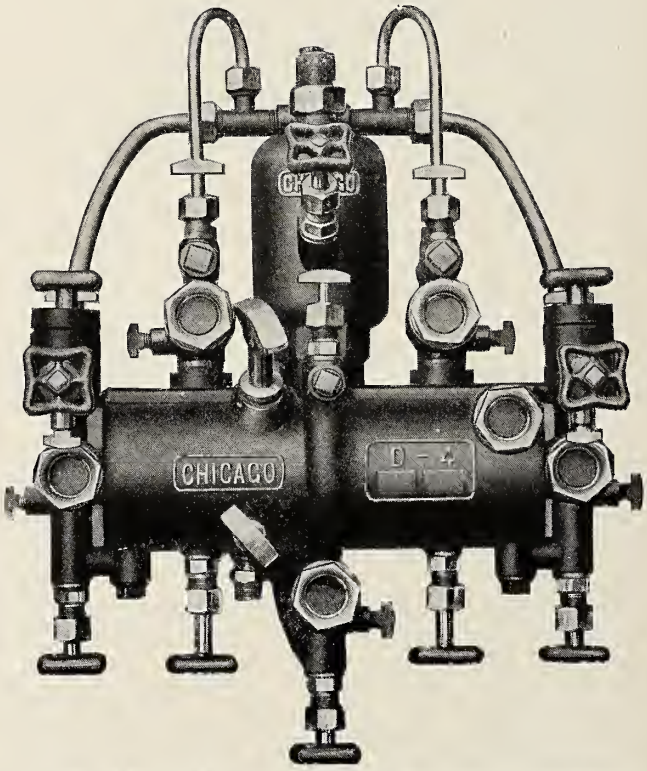

Fig. 1307—Chicago Class D4 Five Feed Lubricator.

Figs. 1305-1307 Refer to Ohio Injector Company Equipment.

Numbers Refer to Names of Parts on Page 539.

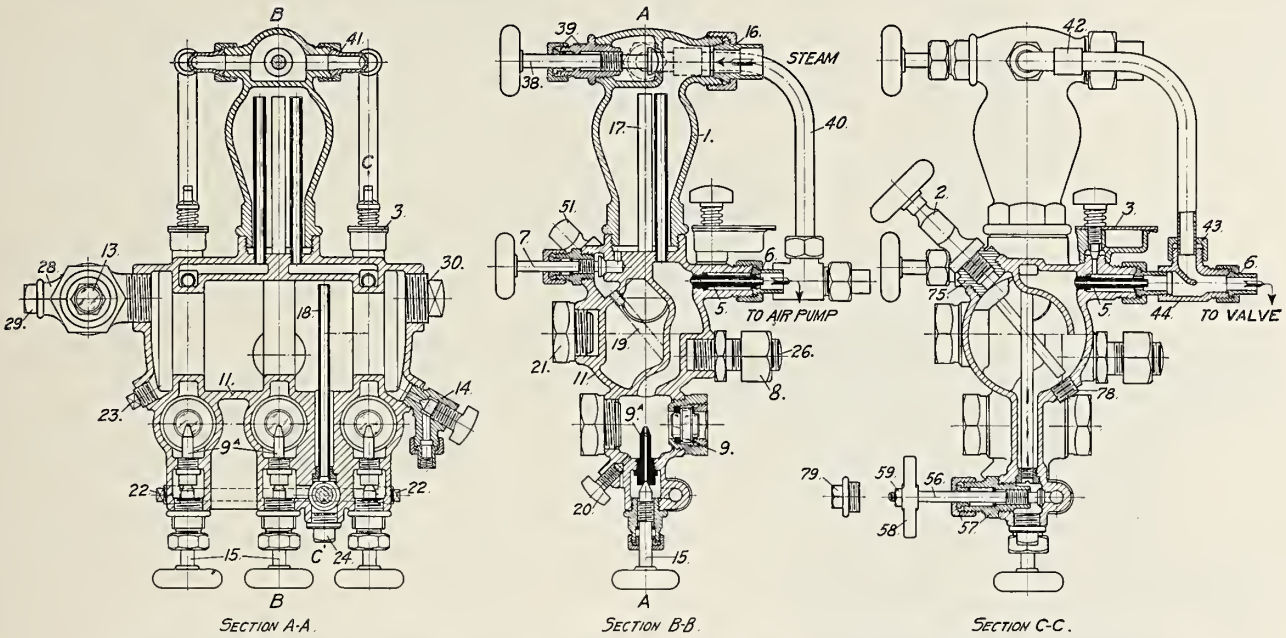

Fig. 1308—Nathan Triple Feed Lubricator, Type 166-F-3; Nathan Manufacturing Company.

Names of Parts of Fig. 1308.

1 *Condenser*
2 *Filling Plug*
3 *Hand Oiler*
5 *Reducing Plug*
6 *Delivery Nut and Tailpiece*
7 *Water Valve*
8 *Stud Nut*
9 *Sight-feed Glass and Casing*
9a *Feed Nozzle*
11 *Body*
13 *Gage Glass and Casing*
14 *Waste Cock*
15 *Regulating Valve*
16 *Top Connection*
17 *Equalizing Pipe*
18 *Oil Pipe*
19 *Water Pipe*
20 *Sight-feed Drain Valve*
21 *Reserve Glass and Casing*
22 *Cleaning Plug*
23 *Body Plug*
24 *Oil Pipe Plug*
26 *Support Stud*
28 *Gage Glass Bracket*
29 *Cleaning Plug*
30 *Gage Glass Cap*
38 *Auxiliary Steam Valve Spindle*
39 *Auxiliary Steam Valve Bonnet and Nut*
40 *Auxiliary Steam Pipe*
41 *Elbow Connection for Auxiliary Steam Pipe*
42 *Connecting Nipple for Auxiliary Steam Pipe*
43 *Packing Nut for Auxiliary Steam Pipe*
44 *T Connection for Auxiliary Steam Pipe*
51 *Plug for Filling Hole*
56 *Oil Cut-out Valve Spindle*
57 *Oil Cut-out Valve Bonnet and Nut*
58 *Oil Cut-out Valve Handle*
59 *Oil Cut-out Valve Handle Nut*
75 *Removable Seat for Filling Plug*
78 *Plug for Water Pipe*
79 *Cap for Plugging Oil Cut-out Valve*

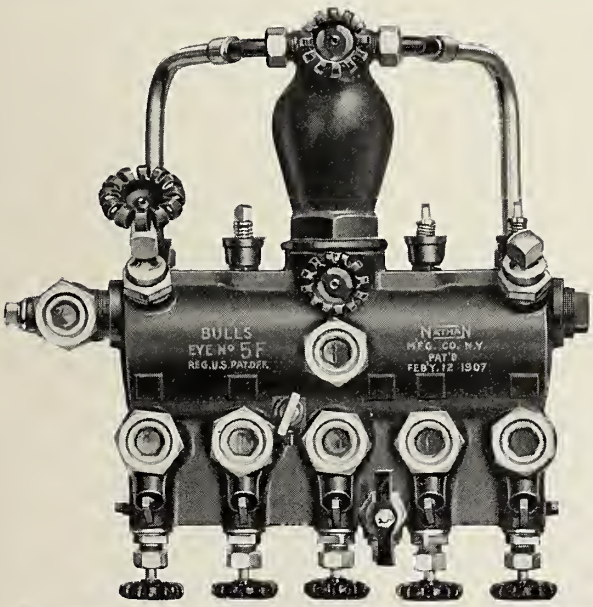

Fig. 1309—Nathan Five Feed Lubricator, Type 166-F-5; Nathan Manufacturing Company.

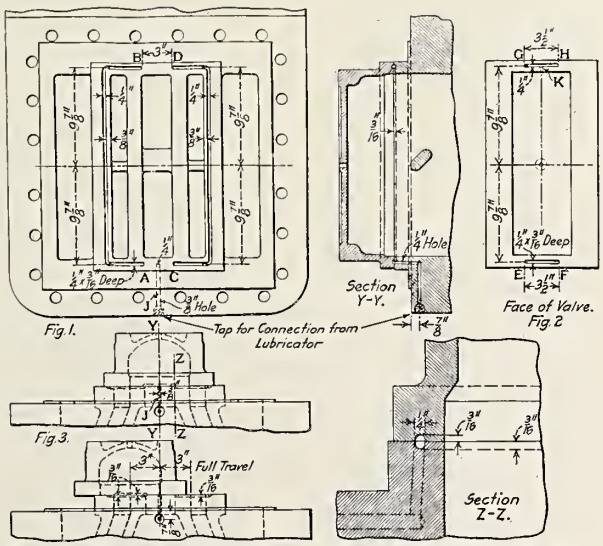

Fig. 1310—Method of Slide Valve Lubrication; Buffalo, Rochester & Pittsburg.

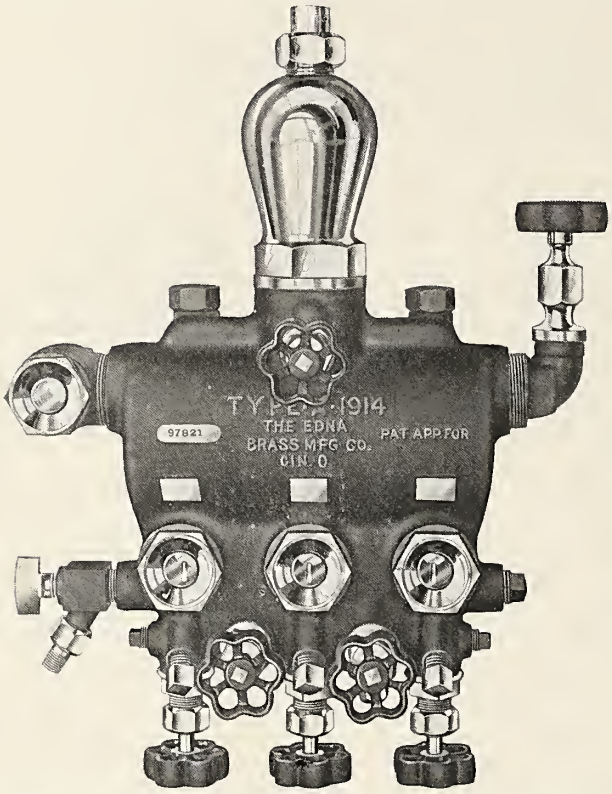

Fig. 1311—Edna Bullseye Lubricator; Edna Brass Manufacturing Company.

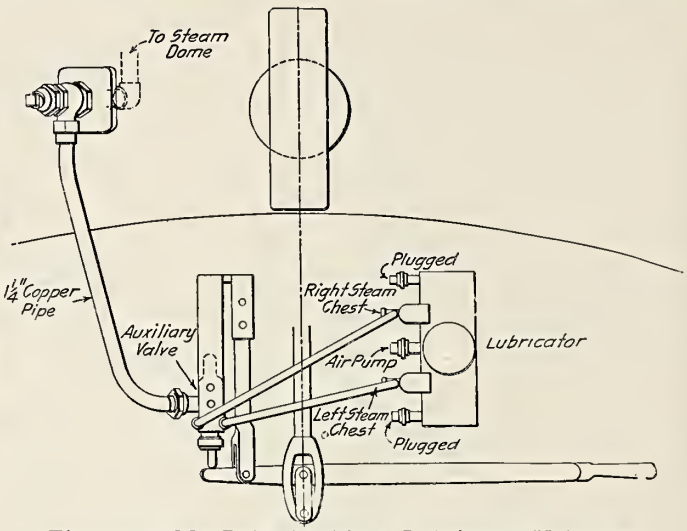

Fig. 1312—MacBain Auxiliary Lubricator Valve, as Applied to New York Central Mikado (2-8-2) Locomotives.

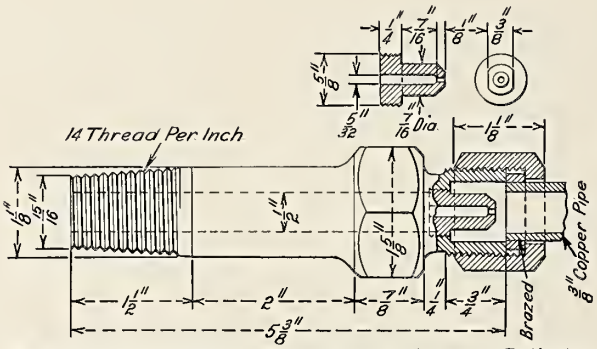

Fig. 1313—Lubricator Pipe Connection to Cylinder Steam Passages; Pennsylvania Railroad.

Names of Parts of Edna Bullseye Lubricator, Fig. 1314.

1 *Condenser*
1a *Condenser*
2 *Filling Plug*
2a *Filling Plug Ell*
2b *Filling Plug Handle*
3 *Hand Oiler, complete*
3a *Hand Oiler Body*
3b *Hand Oiler Cap*
3c *Hand Oiler Valve*
3d *Hand Oiler Spring*
5 *Reducing Plug (Choke)*
6 *Delivery Nut*
6a *Delivery Tailpiece*
7 *Water Valve, complete*
7c *Water Valve Bonnet*
7d *Water Valve Stem*
7e *Water Valve Gland*
7f *Water Valve Handle*
7g *Water Valve Packing Nut*
7a *Air Cylinder Valve, complete*
7h *Air Cylinder Valve Bonnet*
7i *Air Cylinder Valve Stem*
7k *Air Cylinder Valve Gland*
7l *Air Cylinder Valve Handle*
7m *Air Cylinder Valve Packing Nut*
7n *Air Cylinder Valve Deliv. Nut*
7o *Air Cylinder Valve Plug*
7r *Air Cylinder Valve Connection*
7s *Air Cylinder Valve Delivery Tailpiece*
7b *Oil Cut-Off Valve, complete*
7t *Oil Cut-Off Valve Bonnet*
7u *Oil Cut-Off Valve Stem*
7v *Oil Cut-Off Valve Gland*
7w *Oil Cut-Off Valve Handle*
7x *Oil Cut-Off Valve Packing Nut*
7y *Oil Cut-Off Valve Seat*
8 *Stud Nut*
9 *Sight Feed Glass and Casing (old style)*
9a *Feed Nozzle*
10 *Sight Feed Glass and Casing (new style)*
11 *Body (3 pints)*
11a *Body (4 pints)*
11b *Body (5 pints)*
13 *Gage Glass and Casing*
14 *Waste Cock, complete*
14a *Waste Cock Body*
14b *Waste Cock Stem*
14c *Waste Cock Nut*
14d *Waste Cock Tailpiece*
15 *Regulating Valve, complete*
15a *Regulating Valve Bonnet*
15b *Regulating Valve Stem*
15c *Regulating Valve Gland*
15d *Regulating Valve Handle*
15e *Regulating Valve Packing Nut*
16 *Top Connection Nut*
16b *Top Connection Tailpiece*
16a *Top Connection Nut for 1a*
16c *Top Connection Tailpiece for 1a*
17 *Equalizing Pipe*
18 *Oil Pipe, complete*
18a *Oil Pipe*
18b *Oil Pipe Head*
19 *Water Pipe, complete*
19a *Water Pipe*
19b *Water Pipe Head*
20 *Sight Feed Drain Valve*
22 *Cleaning Plug (body)*
23 *Body Plug*
24 *Oil Pipe Plug*
25 *Steam Valve, complete*
25a *Steam Valve Bonnet*
25b *Steam Valve Stem*
25c *Steam Valve Gland*
25d *Steam Valve Handle*
25e *Steam Valve Packing Nut*
25f *Steam Valve Disc*
25g *Steam Valve Disc Locknut*
26 *Support Stud*
28 *Gage Glass Bracket*
29 *Cleaning Plug*
33 *Glass*
33a *Brass Washer*
33b *Fibre Washer*
33c *Rubber Gasket*
33d *Follower*
33e *Casing (old style)*
33f *Casing (new style)*
52 *Cap*
53 *Plug for Water Pipe*

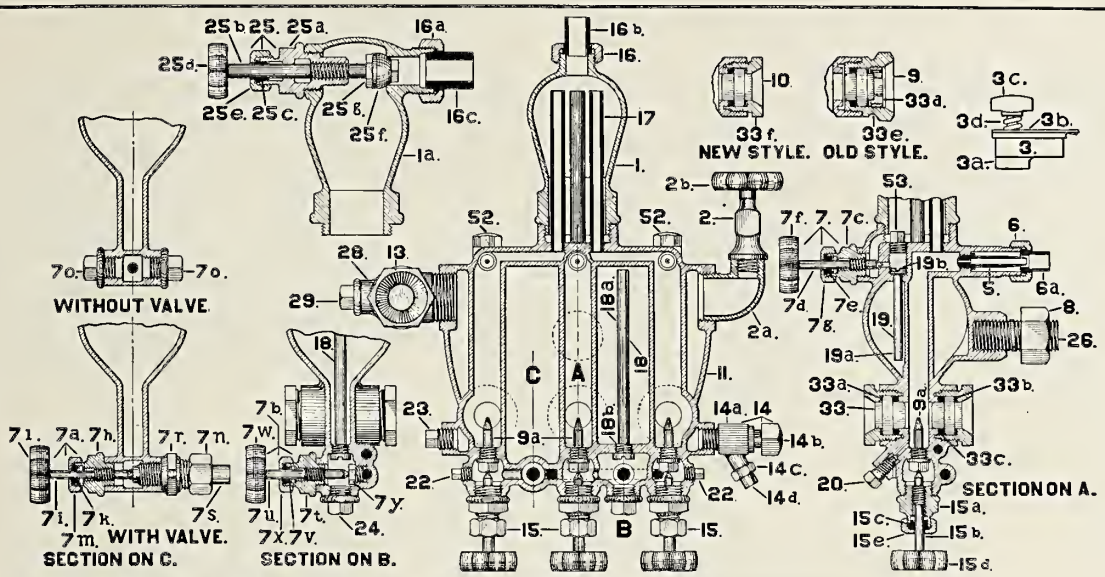

Fig. 1314—Edna Bullseye Lubricator; Edna Brass Manufacturing Company.

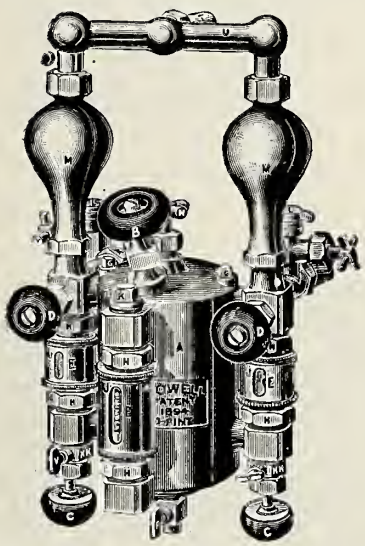

Fig. 1315—Star Duplex Condenser and Double Up-Feed Lubricator; Wm. Powell Company.

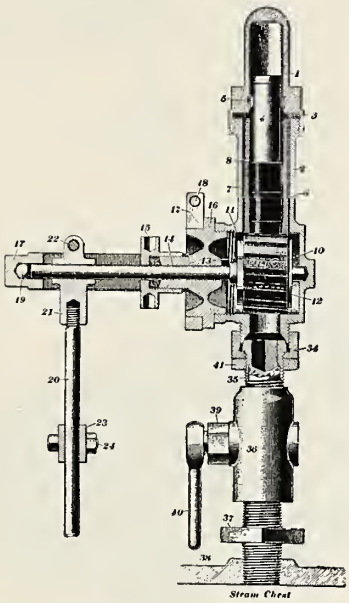

Fig. 1316—National Graphite Lubricator; National Graphite Lubricator Company.

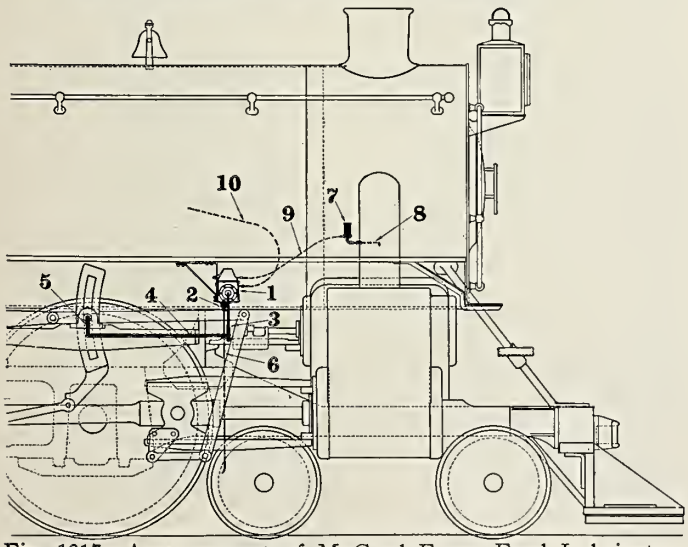

Fig. 1317—Arrangement of McCord Force Feed Lubricator; McCord & Company.

Names of Parts of Fig. 1317.

1 *Lubricator Under Running Board*

2 *Non-freezing Heater Drain Valve for Maintaining Heater Pipe Pressure*

3 *Operating Lever*

4 *Operating Lever Rod*

5 *Walschaert Link Trunnion Lever*

6 *Heater Drain Valve Pipe*

7 *Diaphragm Terminal Check Valve, which Maintains Constant Oil Pipe Pressure, Irrespective of the Steam Channel Pressure*

8 *Steam Channel Oil Nozzle*

9 *Oil Pipe*

10 *Heater Pipe*

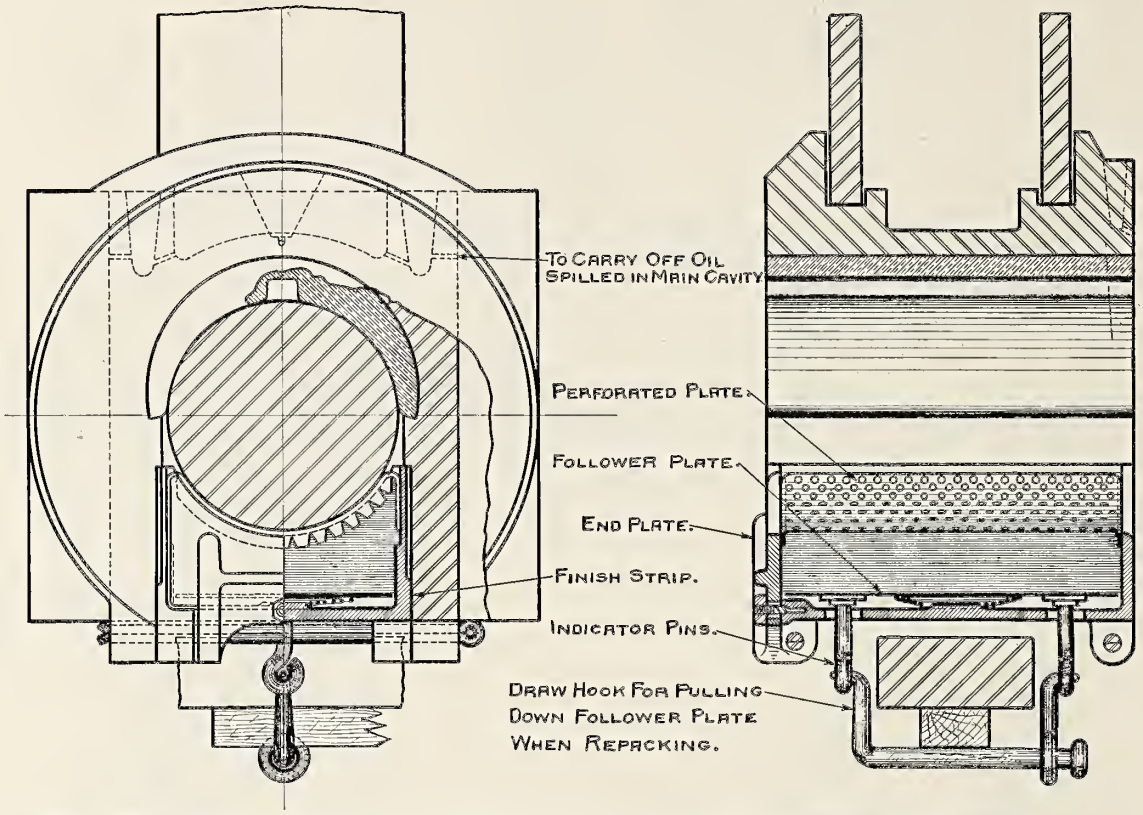

Fig. 1318—Franklin Driving Box Lubricator No. 4; Franklin Railway Supply Company.

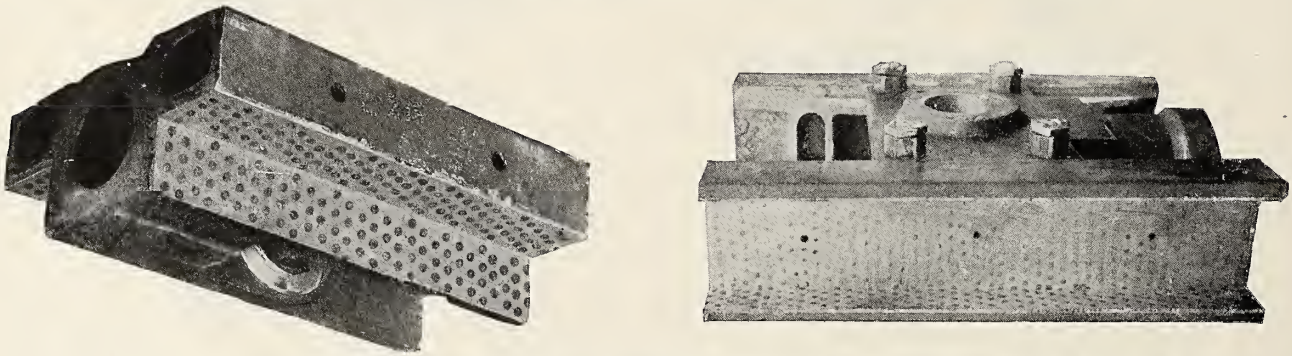

Fig. 1319—Randall Graphite Sheet Lubricator Applied to Crossheads; Strong, Carlisle & Hammond Company.

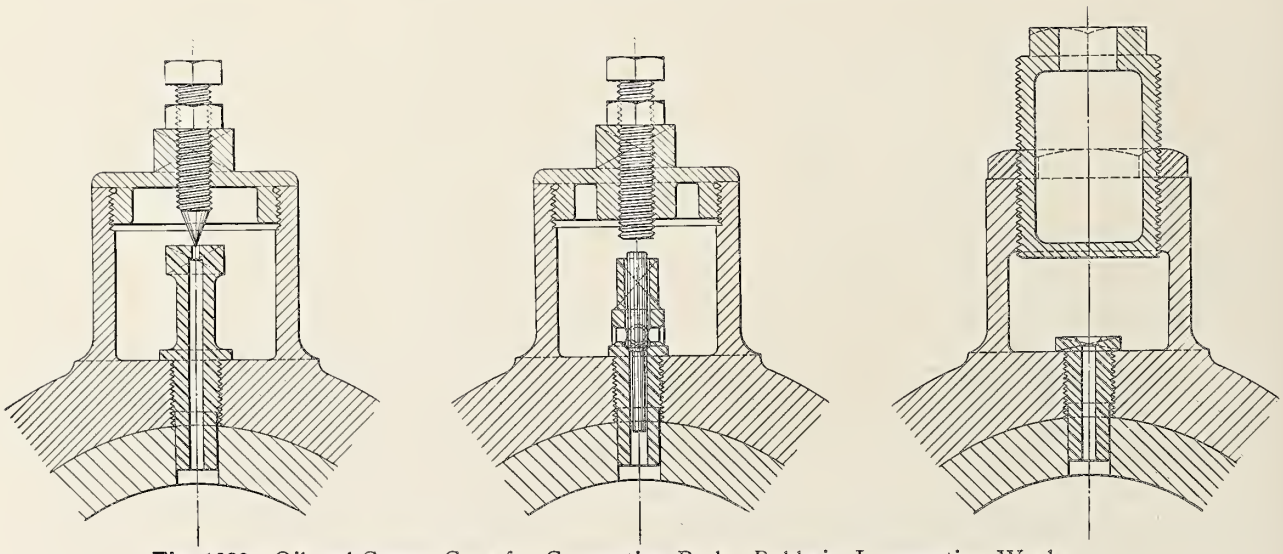

Fig. 1320—Oil and Grease Cups for Connecting Rods; Baldwin Locomotive Works.

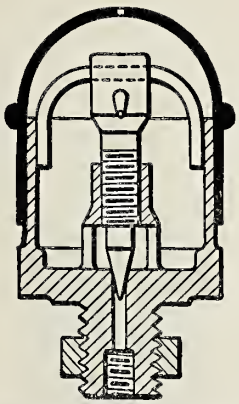

Fig. 1321—Nathan Standard Piston Rod and Valve Stem Oil Cup; Nathan Manufacturing Company.

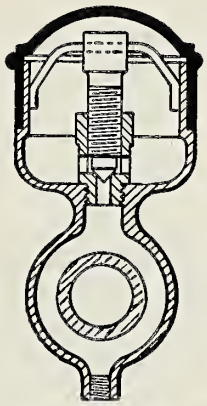

Fig. 1322—Nathan Standard Piston Rod and Valve Stem Oil Cup with Bolt Hole; Nathan Manufacturing Company.

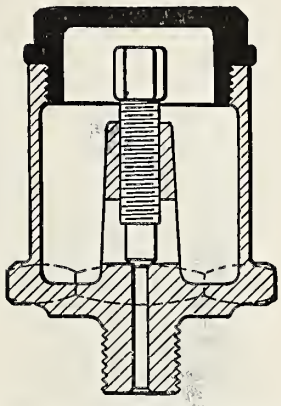

Fig. 1323 — Nathan Eccentric Oil Cup; Nathan Manufacturing Company.

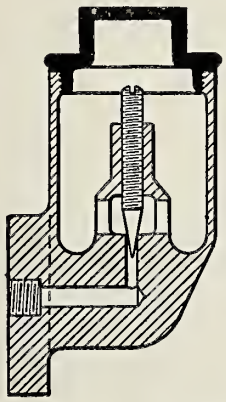

Fig. 1324—Nathan Crosshead Oil Cup; Nathan Manufacturing Company.

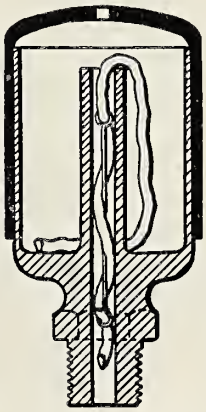

Fig. 1325—Nathan Valve Stem Packing Oil Cup; Nathan Manufacturing Company.

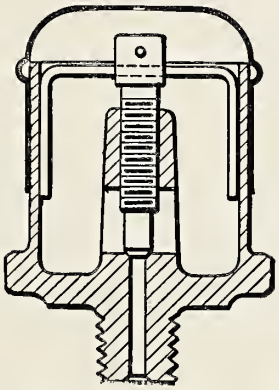

Fig. 1326—Nathan Guide Oil Cup; Nathan Manufacturing Company.

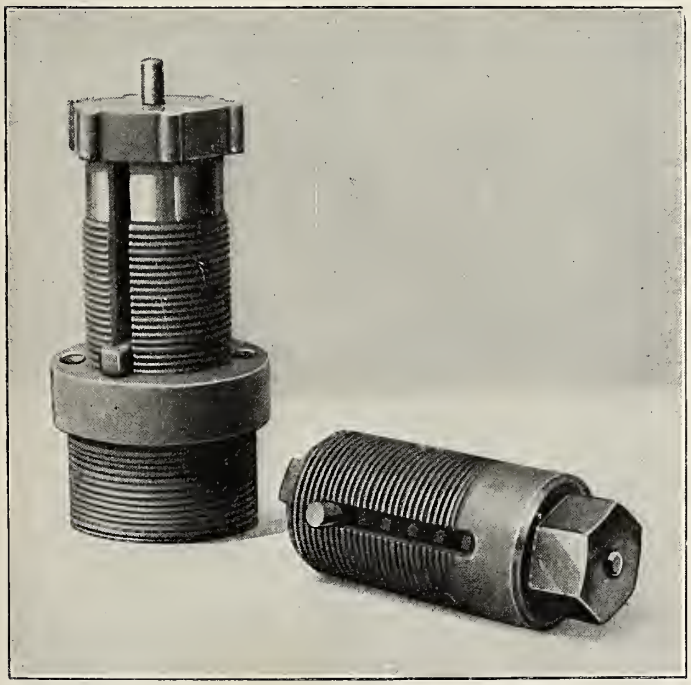

Fig. 1327—Grease Plugs Fitted with Locking Device; D. F. Hervey.

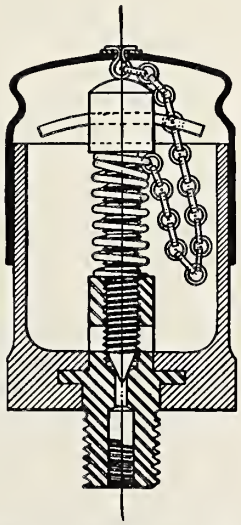

Fig. 1328—Indestructible Oil Cup; United States Metallic Packing Company.

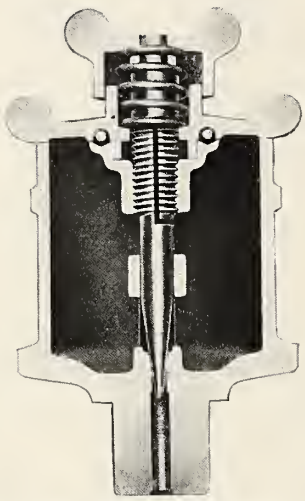

Fig. 1329—Hancock Guide, Rod and Valve Stem Oil Cup; The Hancock Inspirator Company.

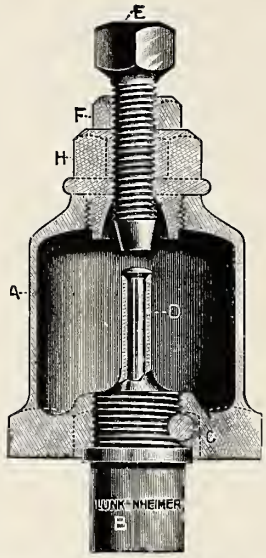

Fig. 1330—Main and Side Rod Oil Cup; The Lunkenheimer Company.

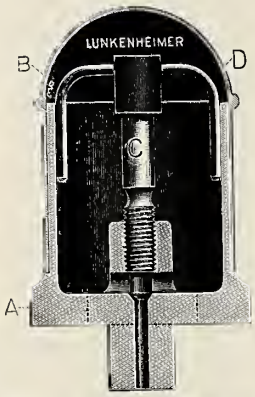

Fig. 1331—Guide and Piston Rod Oil Cup; The Lunkenheimer Company.

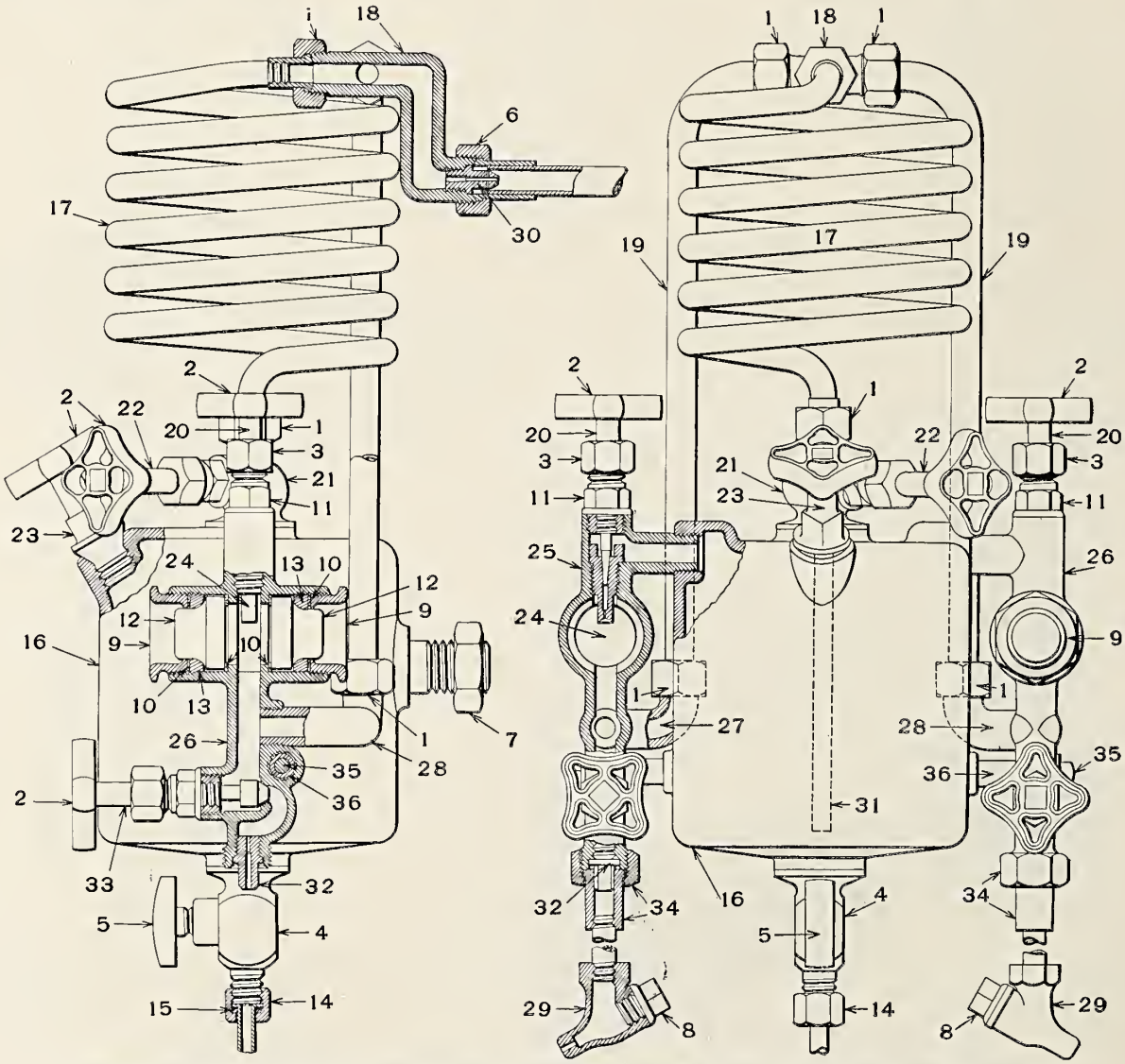

Fig. 1332—Chicago Flange Oiler, Elliott System, Patented; The Ohio Injector Company.
Numbers Refer to Names of Parts on Page 547.

Names of Parts of Chicago Flange Oiler, Fig. 1332.

1 *Pipe Union Nut for Circulating Pipe*
2 *Handle for Valve Stem*
3 *Feed Valve Packing Nut*
4 *Drain Plug*
5 *Drain Valve Plug for Oil Bowl*
6 *Steam Connection*
7 *Mounting Stud Lock Nut*
8 *Cap Plug*
9 *Packing Nut for Glass*
10 *Follower Ring and Washer*
11 *Feed Valve Hub*
12 *Solid Glass*
13 *Gasket for Solid Glass*
14 *Drain Valve Pipe Nut*
15 *Drain Valve Pipe Nut Ring*
16 *Oil Bowl*
17 *Condenser Coil with Nuts and Nipples*
18 *Steam Pipe "T" Connection*
19 *Steam Circulating Pipe*
20 *Feed Valve*
21 *Condenser Valve Body*
22 *Condenser Valve Complete*
23 *Filler Plug*
24 *Feed Tip*
25 *Sight Feed Body (right)*
26 *Sight Feed Body (left)*
27 *Steam Circulating Pipe Elbow (right)*
28 *Steam Circulating Pipe Elbow (left)*
29 *Flange Nozzle*
30 *Steam Pipe Choke*
31 *Water Pipe*
32 *Choke for Oil Delivery Pipe*
33 *Oil Delivery Valve Complete*
34 *Oil Delivery Pipe Nut and Nipple*
35 *Bolt for Feed Arm Support*
36 *Bushing for Feed Arm Support*

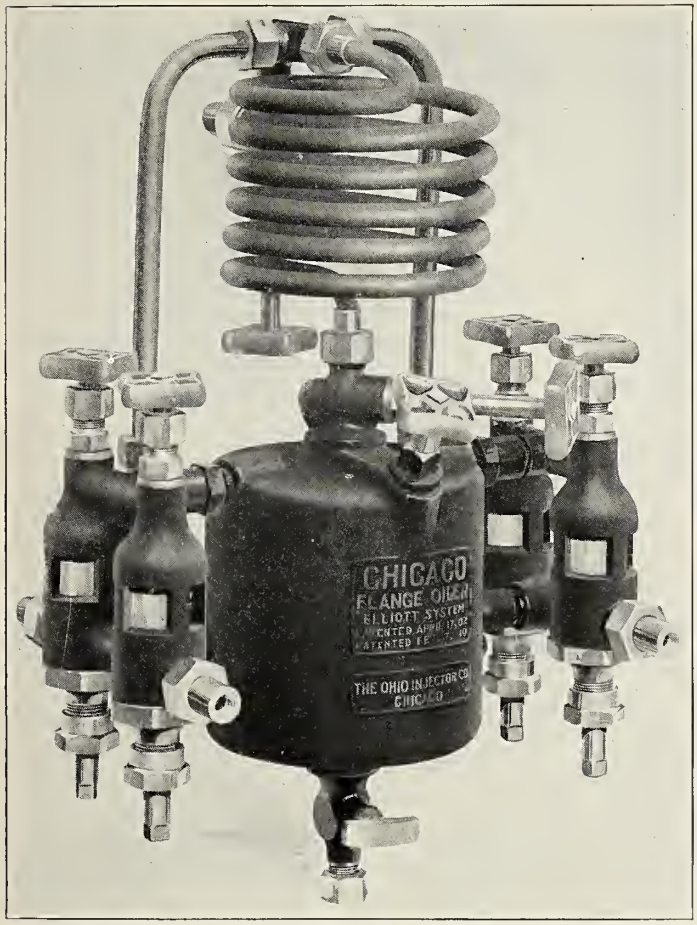

Fig. 1333—Chicago Four-Feed Flange Oiler; The Ohio Injector Company.

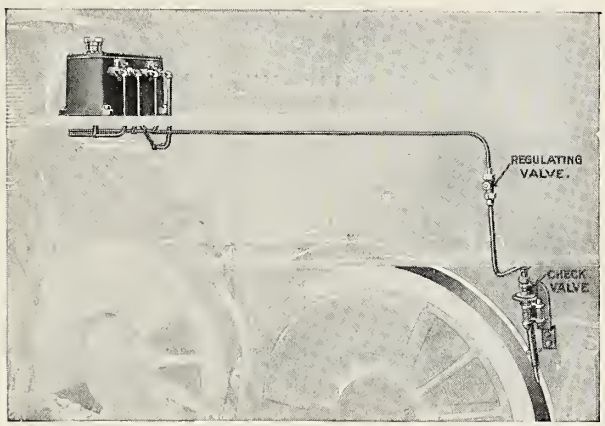

Fig. 1334—Force Feed Flange Oiler; Detroit Lubricator Company.

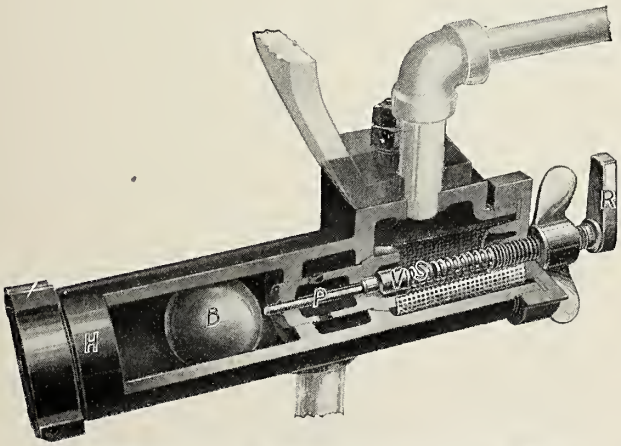

Fig. 1335—Control Valve of Force Feed Flange Oiler; Detroit Lubricator Company.

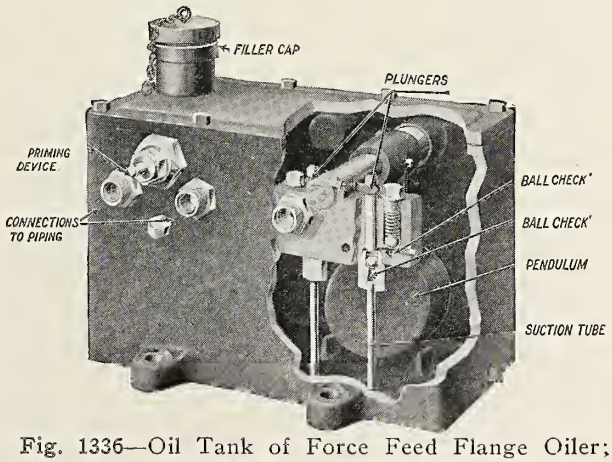

Fig. 1336—Oil Tank of Force Feed Flange Oiler; Detroit Lubricator Company.

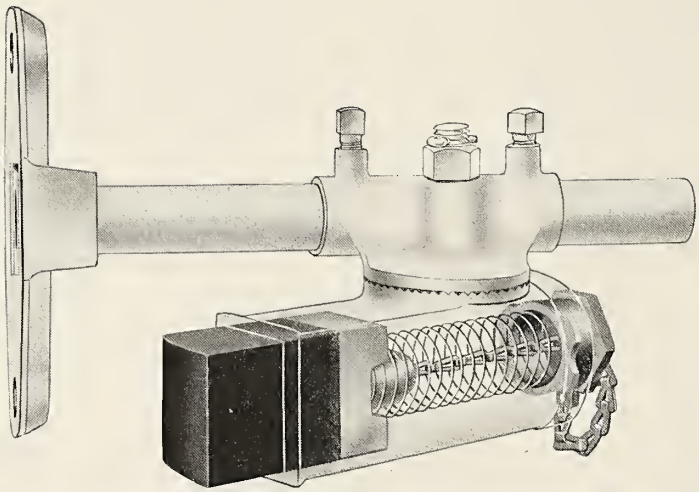

Fig. 1337—Collins Wheel Flange Lubricator; The Collins Metallic Packing Company.

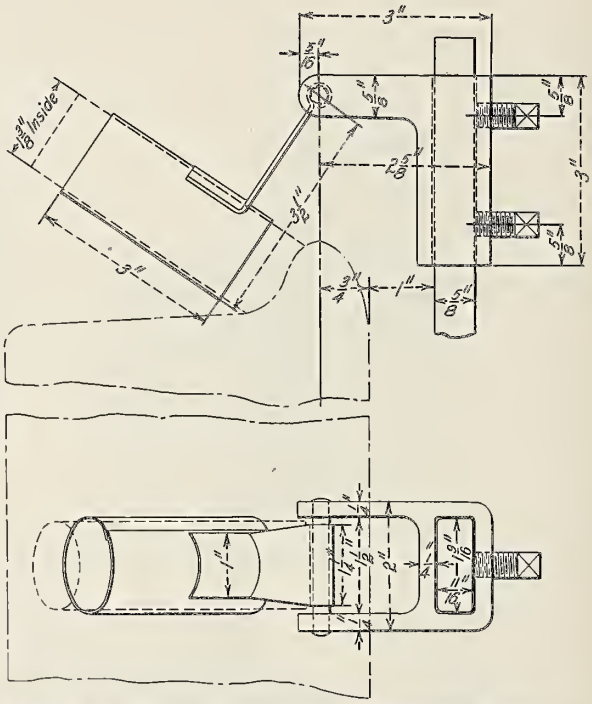

Fig. 1338—Flange Lubricator; Canadian Pacific.

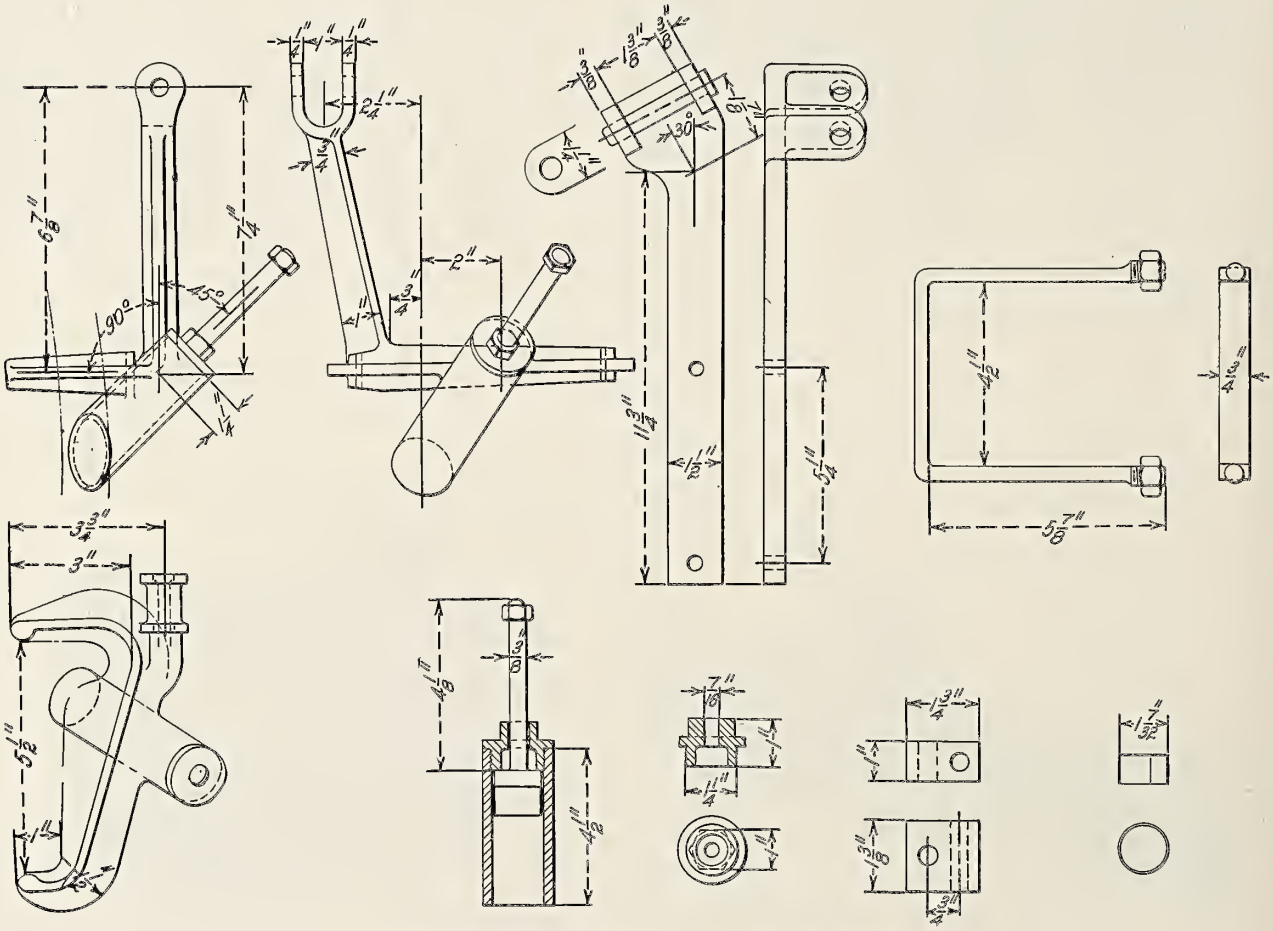

Fig. 1339—Flange Lubricator; Canadian Pacific.

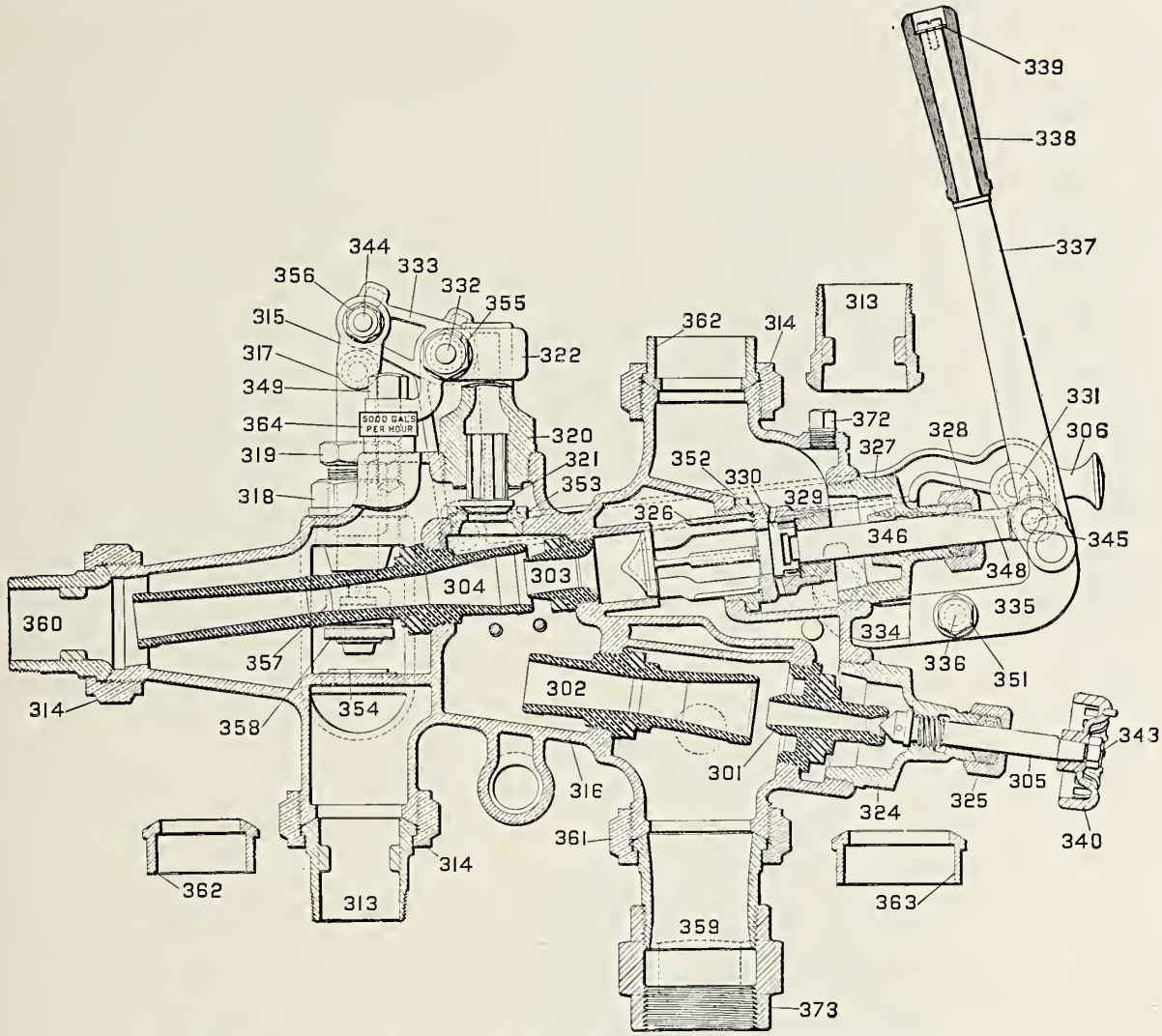

Fig. 1340—Hancock Inspirator, Type E; The Hancock Inspirator Company.

Names of Parts of Fig. 1340.

301 *Lifter Steam Nozzle*
302 *Lifter Tube*
303 *Forcer Steam Nozzle*
304 *Forcer Tube*
305 *Regulating Valve Spindle*
306 *Connecting Rod*
313 *Threaded Nipple for Steam*
313 *Threaded Nipple for Overflow*
314 *Coupling Nut for Steam*
314 *Coupling Nut for Delivery*
314 *Coupling Nut for Overflow*
315 *Connecting Links for Final Overflow Valve*
317 *Final Overflow Valve Stem*
318 *Bonnet for Overflow Valve Stem*
319 *Packing Nut for Final Overflow Valve Stem*
320 *Bonnet for Intermediate Overflow Valve*
321 *Intermediate Overflow Valve*
322 *Holder for Overflow Valve Crank*
324 *Bonnet for Regulating Valve*
325 *Packing Nut for Regulating Valve*
326 *Forcer Steam Valve*
327 *Bonnet for Steam Valve Stem*
328 *Packing Nut for Steam Valve Stem*
329 *Coupling Nut for Forcer Steam Valve*
330 *Lifter Steam Valve*
331 *Steel Stud for Connecting Rod*
332 *Steel Stud for Overflow Valve Crank*
333 *Crank for Overflow Valve*
334 *Side Strap, right hand*
335 *Side Strap, left hand*
336 *Bolt for Side Straps*
337 *Lever*
338 *Wood Handle for Lever*
339 *Screw for Wood Handle*
340 *Wheel for Regulating Valve Spindle*
343 *Nut for Regulating Valve Spindle*
344 *Steel Bolts for Connecting Links*
345 *Steel Pin for Lever and Valve Stem*
346 *Steam Valve Stem*
348 *Connecting Rod Spring*
349 *Cap Screw for Overflow Valve Crank Holder*
351 *Nuts for Side Strap Bolts*
352 *Forcer Steam Valve Seat*
353 *Intermediate Overflow Valve Seat*
354 *Final Overflow Valve Seat*
355 *Nut for Overflow Valve Crank Stud*
356 *Nut for Connecting Link Bolt*
357 *Nut for Final Overflow Valve Stem*
358 *Disc for Final Overflow Valve Stem*
359 *Threaded Nipple for Suction*
360 *Threaded Nipple for Delivery*
361 *Coupling Nut for Suction*
362 *Brazing Nipple for Steam*
362 *Brazing Nipple for Delivery*
362 *Brazing Nipple for Overflow*
363 *Brazing Nipple for Suction*
364 *Capacity Plate*
365 *Name Plate*
366 *Name Plate Screws*
372 *Oil Plug*
373 *Coupling Nut for Suction*

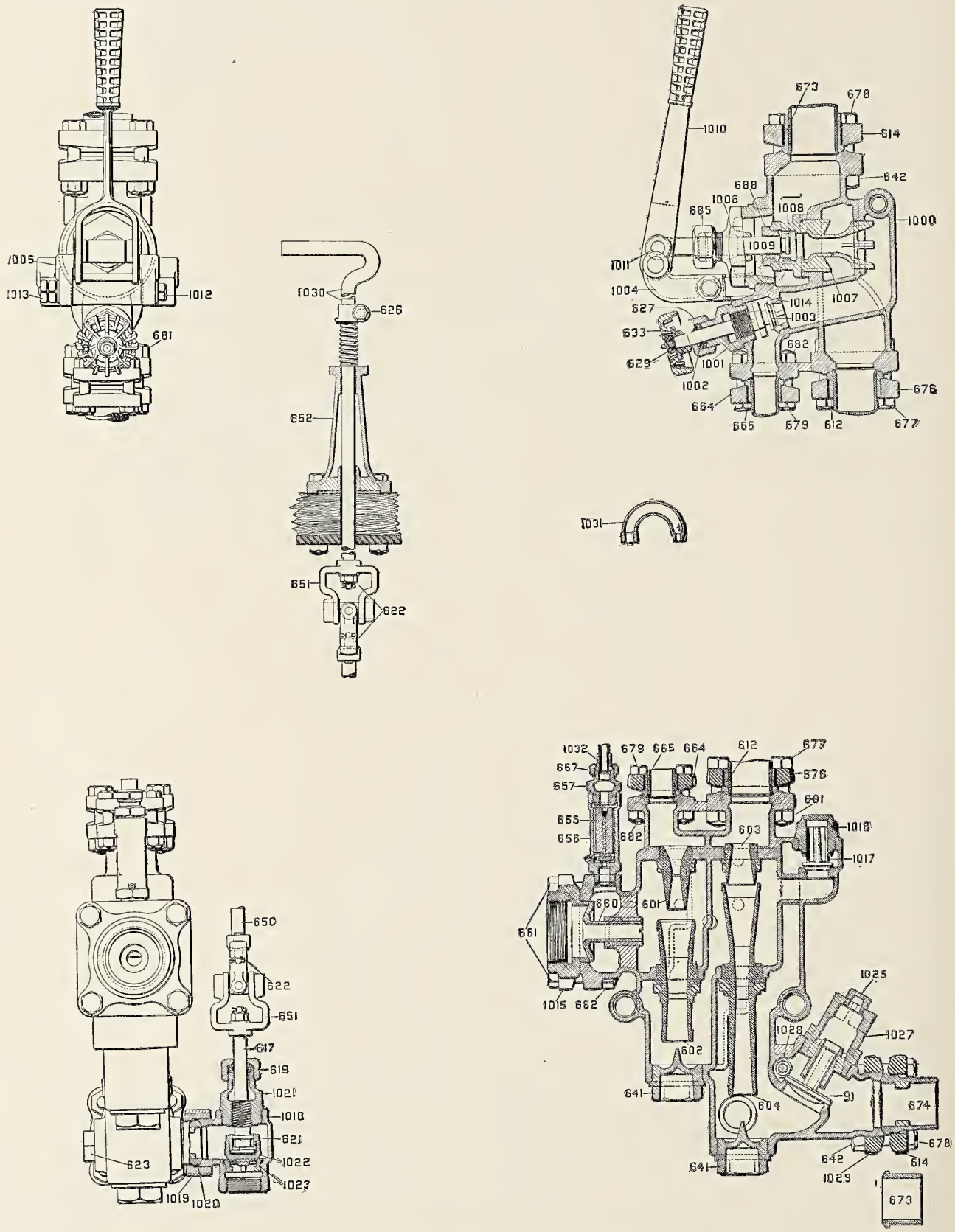

Fig. 1341—Hancock Non-Lifting Inspirator, Type H-NL; The Hancock Inspirator Company.

Numbers Refer to Names of Parts on Page 551.

Names of Parts of Hancock Inspirator Throttle Valve, Fig. 1341.

612 *Brazing Nipple for Forcer Steam*
614 *Flange for Main Steam*
627 *Packing Nut*
629 *Nut for* 1002
633 *Wheel for Regulating Valve*
642 *Nuts for* 678
664 *Flange for Regulating Steam*
665 *Brazing Nipple for Regulating Steam*
673 *Brazing Nipple for Main Steam*
676 *Flange for Forcer Steam*
677 *Bolts for* 676
678 *Bolts for* 614
679 *Bolts for* 664
681 *Nuts for* 677
682 *Nuts for* 679
685 *Operating Valves Packing Nut*
688 *Disc Nut for* 1007
1000 *Body*
1001 *Bonnets for Regulating Valve*
1002 *Stem for Regulating Valve*
1003 *Disc for Regulating Valve*
1004 *R. H. Side Strap*
1005 *L. H. Side Strap*
1006 *Operating Valves Bonnet*
1007 *Valve for Operating Valve*
1008 *Auxiliary Disc for Operating Valve*
1009 *Stem for Operating Valve*
1010 *Lever*
1011 *Lever Pin*
1012 *Side Strap Bolt*
1013 *Side Strap Bolt Check Nuts*
1014 *Removable Seat for Regulating Valve*

Names of Parts of Hancock Inspirator Body, Fig. 1341.

91 *Check Valve Disc*
601 *Lifter Steam Nozzle*
602 *Lifter Steam Tube*
603 *Forcer Steam Nozzle*
604 *Forcer Tube*
612 *Brazing Nipple for Forcer Steam*
614 *Companion Flange for Delivery*
617 *Stem for Overflow Valve*
619 *Packing Nut for Overflow Valve*
621 *Disc Nut for Overflow Valve*
622 *Nuts for* 617 *and* 650
623 *Plug for Overflow Valve*
626 *Collar for* 1030
641 *Caps for Combining Tubes*
642 *Nuts for* 678
650 *Extension Rod for Overflow Valve*
651 *Universal Joints*
652 *Running Board Stand*
655 *Valve Discs*
656 *Alarm Valve Body*
657 *Alarm Valve Bonnet*
660 *Valve for Suction*
661 *Bolts for* 1015
662 *Nuts for* 661
664 *Flange for Regulating Line Connection*
665 *Brazing Nipple for Regulating Line Connection*
667 *Coupling for Alarm Valve*
674 *Threaded Nipple for Delivery*
676 *Flange for Forcer Steam*
677 *Bolts for* 676
678 *Bolts for* 614 *and* 1029
679 *Bolts for* 664
681 *Nuts for* 677
682 *Nuts for* 679

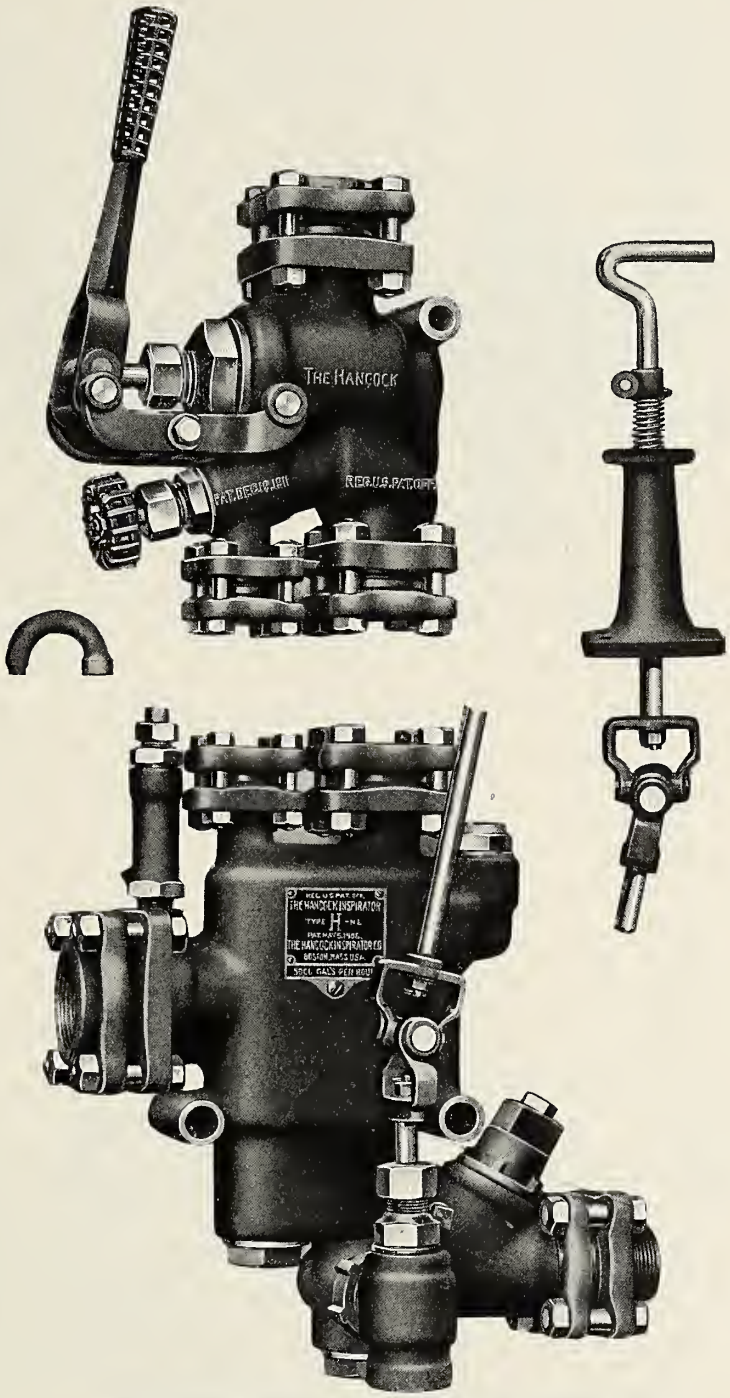

Fig. 1342—Hancock Non-Lifting Inspirator, Type H-NL; The Hancock Inspirator Company.

1015 *Threaded Flange for Suction*
1016 *Intermediate Overflow Bonnet*
1017 *Intermediate Overflow Valve*
1018 *Body for Overflow Valve*
1019 *Coupling for Overflow Valve*
1020 *Threaded Nipple for Overflow Valve*
1021 *Bonnet for Overflow Valve*
1022 *Disc for Overflow Valve*
1023 *Removable Seat for Overflow Valve*
1025 *Check Valve Regrinding Plug*
1027 *Check Valve Cap*
1029 *Threaded Flange for Delivery*
1030 *Handle for Overflow Valve*
1031 *Alarm Valve Nozzle*
1032 *Brazing Nipple for Alarm Valve*

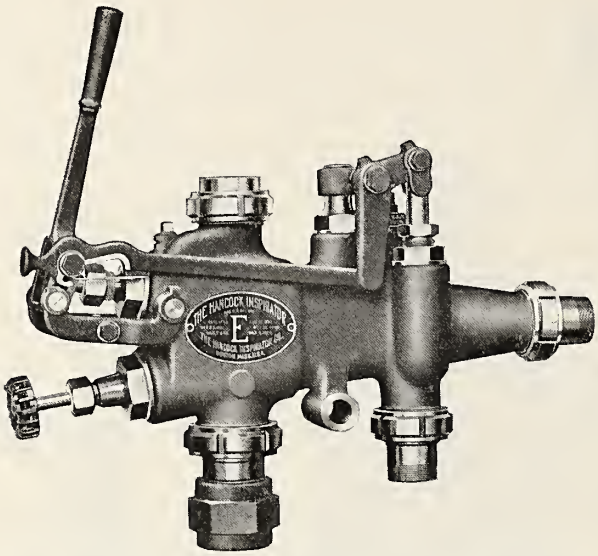

Fig. 1343—Hancock Inspirator, Type E; The Hancock Inspirator Company.

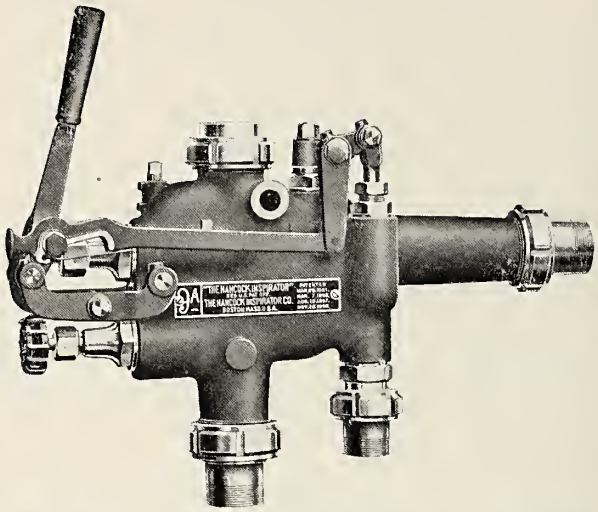

Fig. 1344—Hancock Inspirator, Type A; The Hancock Inspirator Company.

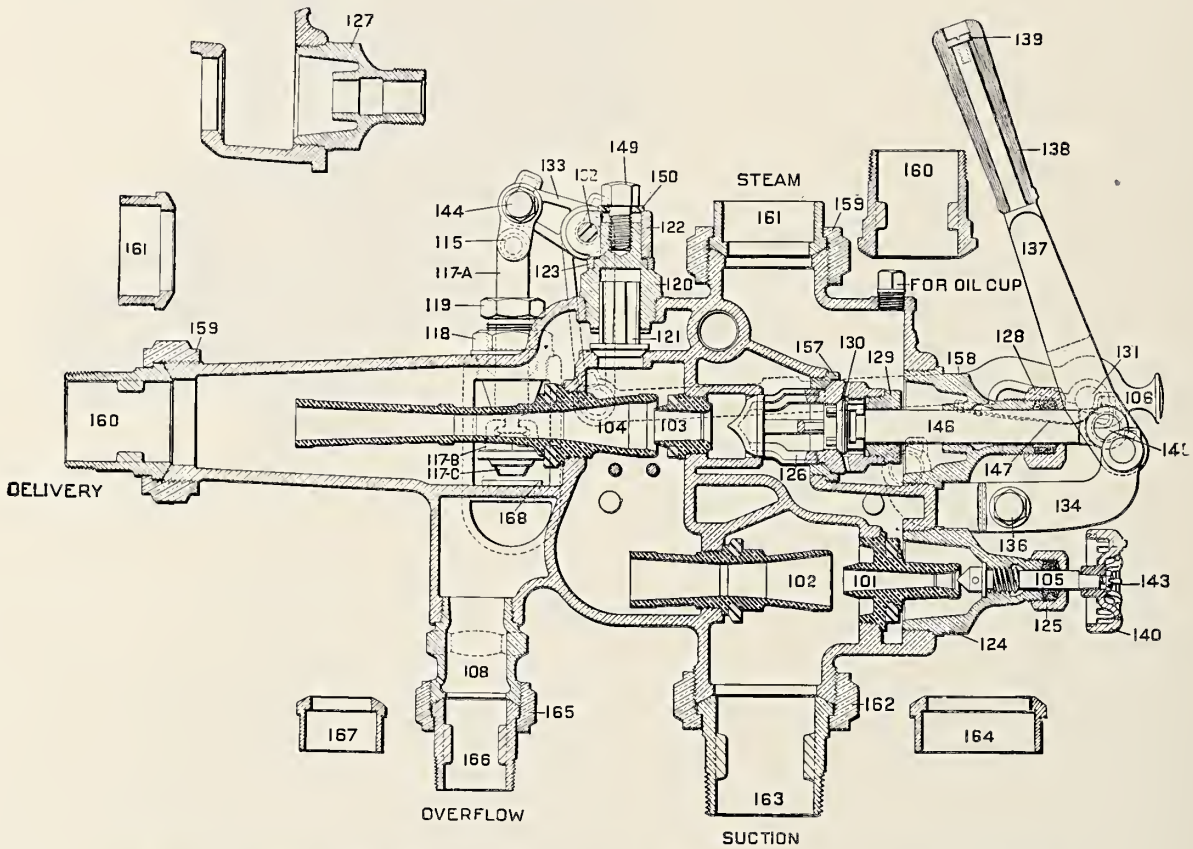

Fig. 1345—Hancock Inspirator, Types A, B and D; The Hancock Inspirator Company.

Numbers Refer to Names of Parts on Page 553.

Names of Parts of Hancock Inspirator, Fig. 1345.

101 *Lifter Steam Nozzle*
102 *Lifter Tube*
103 *Forcer Steam Nozzle*
104 *Forcer Combining Tube*
105 *Regulating Valve Spindle*
106 *Connecting Rod*
108 *Overflow Nozzle*
116 *Steel Pin for* 115
117 *Final Overflow Valve, Complete*
117*a* *Final Overflow Valve Stem*
117*b* *Nut for* 117
117*c* *Disc for* 117
118 *Bonnet for Final Overflow Valve*
119 *Packing Nut for Final Overflow Valve*
120 *Bonnet for Intermediate Overflow Valve*
121 *Intermediate Overflow Valve*
122 *Holder for Overflow Valve Crank*
123 *Adjusting Ring*
124 *Bonnet for Regulating Valve*
125 *Packing Nut for Regulating Valve*
126 *Forcer Steam Valve*
127 *Bonnet for Steam Valve*
128 *Packing Nut for Steam Valve*
129 *Coupling Nut for* 126
130 *Lifter Steam Valve*
131 *Steel Stud for Connecting Rod*
132 *Steel Stud for* 122 *and* 133
133 *Crank for Overflow Valve*
134 *Side Strap R. H.*
135 *Side Strap L. H.*
136 *Steel Bolt for* 134 *and* 135
137 *Lever*
138 *Wood Handle for* 137
139 *Screw for* 137
140 *Malleable Iron Wheel for* 105
143 *Steel Screw for* 105
144 *Steel Bolt for* 115
145 *Steel Pin Connecting* 137 *and* 146
146 *Steam Valve Stem*
147 *Spring for* 106
148 *Steel Nut for* 144
149 *Cap Screw for* 120
150 *Iron Washer for* 120
151 *Steel Nuts for* 136
152 *Name Plate*
153 *Name Plate Stud*
154 *Name Plate Screw*
155 *Spanner Wrench*
156 *Tube Wrench*
157 *Steam Valve Seat*
158 *Bonnet for Steam Valve*
159 *Coupling Nut for Steam and Delivery*
160 *Threaded Nipple for Steam and Delivery*
161 *Brazing Nipple for Steam and Delivery*
162 *Coupling Nut for Suction*
163 *Threaded Nipple for Suction*
164 *Brazing Nipple for Suction*
165 *Coupling Nut for Overflow*
166 *Threaded Nipple for Overflow*
167 *Brazing Nipple for Overflow*
168 *Final Overflow Valve Seat*

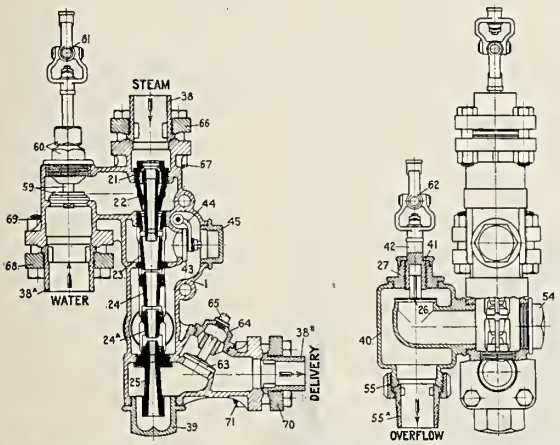

Fig. 1346—Simplex Non-Lifting Injector; Nathan Manufacturing Company.

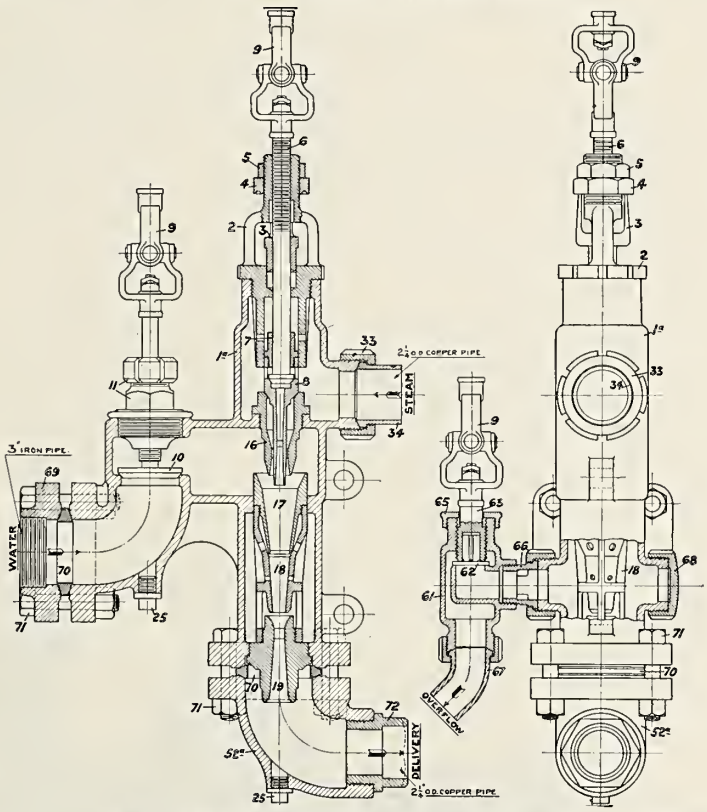

Fig. 1347—Nathan Non-Lifting Injector; Nathan Manufacturing Company.

Names of Parts of Simplex Injector, Fig. 1346.

1 *Body*
21 *Steam Nozzle*
22 *Jet Nozzle*
23 *Intermediate Nozzle*
24 *Combining Nozzle*
24*a* *Combining Nozzle*
25 *Delivery Nozzle*
26 *Heater Cock Check*
27 *Guide for Heater Cock Check*
38 *Tailpiece (steam)*
38*a* *Tailpiece (water)*
38*b* *Tailpiece (delivery)*
39 *Nozzle Cap*
40 *Overflow Casing*
41 *Overflow Cap*
42 *Overflow Spindle*
43 *Hinge Check*
44 *Hinge*
45 *Hinge Check Cap*
54 *Side Cap*
55 *Coupling Nut (overflow)*
55*a* *Tailpiece (overflow)*
59 *Water Valve and Spindle*
60 *Water Valve Bonnet and Nut*
61 *Universal Joint (water valve)*
62 *Universal Joint (overflow)*
63 *Delivery Check*
64 *Cap for Delivery Check*
65 *Grinding Plug for Delivery Check*
66 *Companion Flange (steam end)*
67 *Bolt and Nut (steam end)*
68 *Companion Flange (water end)*
69 *Bolt and Nut (water end)*
70 *Companion Flange (delivery end)*
71 *Bolt and Nut (delivery end)*

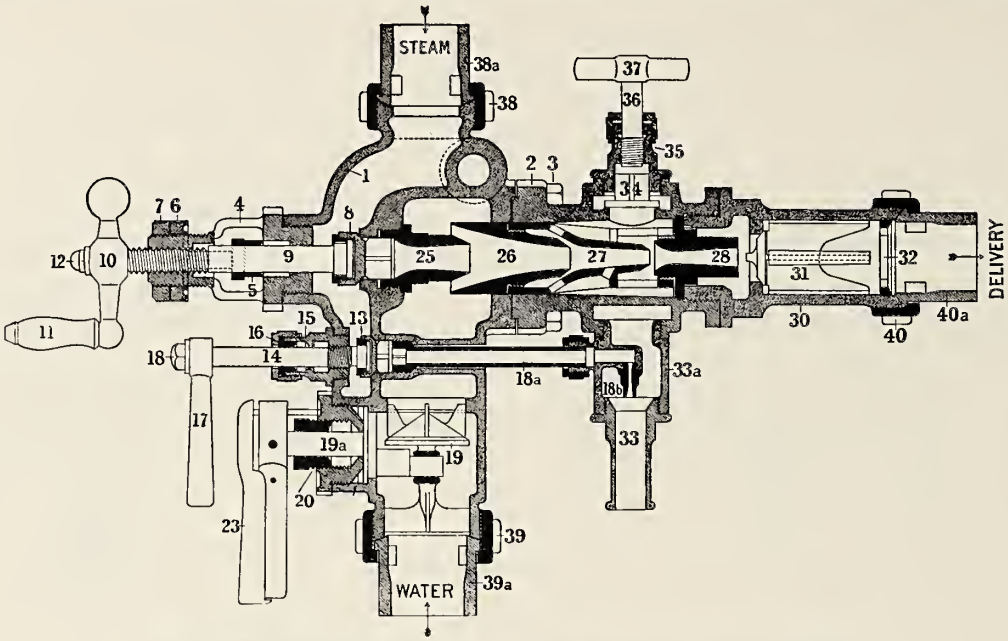

Fig. 1348—Monitor Injector; Nathan Manufacturing Company.

Names of Parts of Monitor Injector, Fig. 1348.

1 *Body (back part)*
2 *Body (front part)*
3 *Body Screw*
4 *Yoke*
5 *Yoke Gland*
6 *Yoke Packing Nut*
7 *Yoke Lock Nut*
8 *Steam Valve Disc and Nut*
9 *Steam Valve Spindle*
10 *Steam Valve Handle*
11 *Steam Valve Rubber Handle*
12 *Steam Valve Top Nut*
13 *Jet Valve Disc and Nut*
14 *Jet Valve Spindle*
15 *Jet Valve Bonnet and Nut*
16 *Jet Valve Gland*
17 *Jet Valve Lever Handle*
18 *Jet Valve Top Nut*
18a *Jet Tube*
18b *Lifting Nozzle*
19 *Water Valve*
19a *Eccentric Spindle*
20 *Water Valve Bonnet*
23 *Water Valve Lever Handle*
25 *Steam Nozzle*
26 *Intermediate Nozzle*
27 *Condensing Nozzle*
28 *Delivery Nozzle*
30 *Line Check*
31 *Line Check Valve*
32 *Stop Ring*
33 *Overflow Nozzle*
33a *Overflow Chamber with Nut*
34 *Heater Cock Check*
35 *Heater Cock Bonnet and Nut*
36 *Heater Cock Spindle*
37 *Heater Cock T Handle*
38 *Coupling Nut, Steam End*
38a *Tail Piece, Steam End*
39 *Coupling Nut, Water End*
39a *Tail Piece, Water End*
40 *Coupling Nut, Delivery End*
40a *Tail Piece, Delivery End*

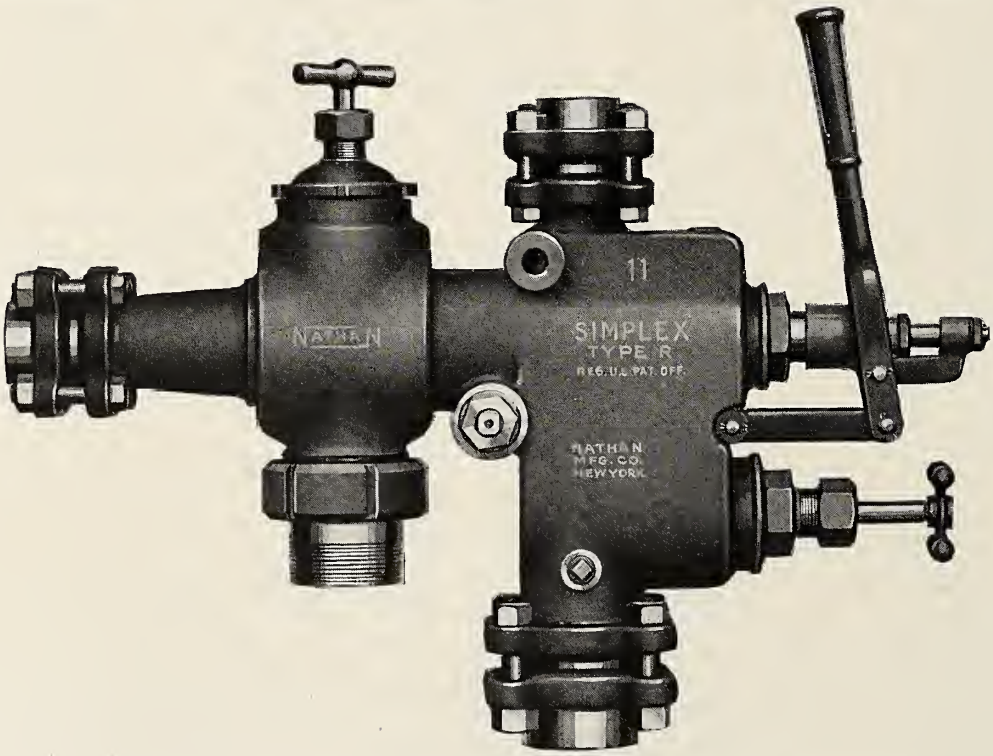

Fig. 1349—Simplex Injector, Type R; Nathan Manufacturing Company.

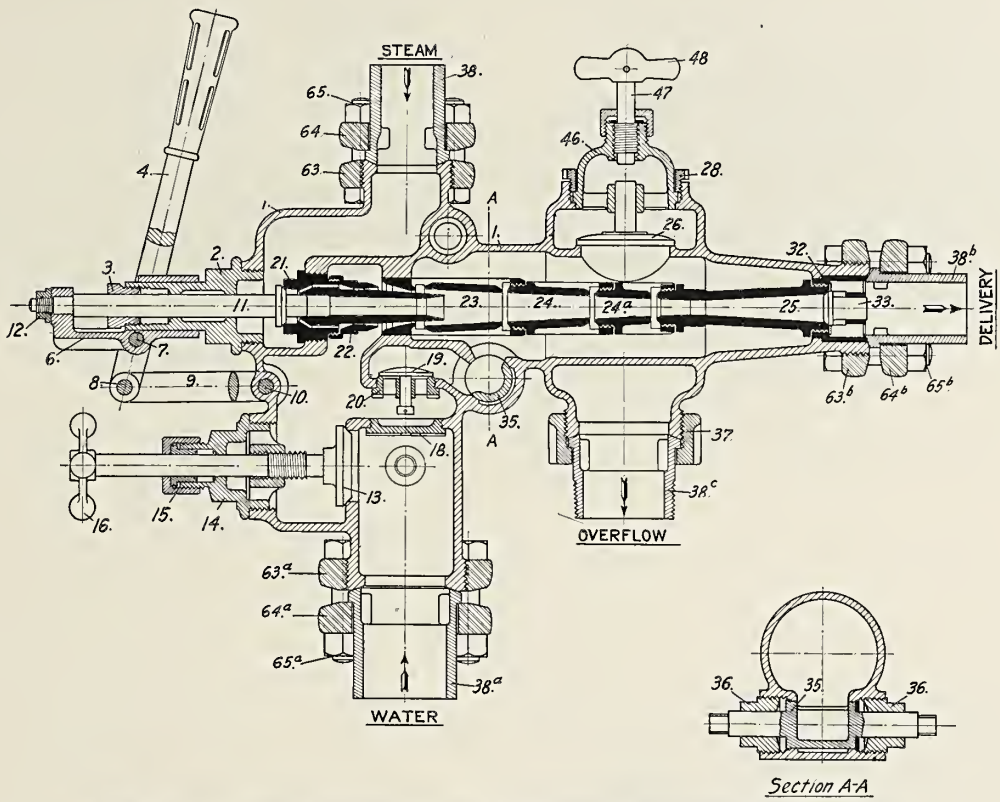

Fig. 1350—Simplex Injector, Type R; Nathan Manufacturing Company.

Names of Parts of Simplex Injector, Fig. 1350.

1 *Body*
2 *Steam Bonnet*
3 *Steam Packing Nut*
4 *Lever*
6 *Guide for Steam Spindle*
7 *Guide Pin*
8 *Lever Pin*
9 *Fulcrum Bar*
10 *Fulcrum Pin*
11 *Steam Spindle*
12 *Lock Nut*
13 *Water Valve*
14 *Water Valve Bonnet*
15 *Water Valve Bonnet Nut*
16 *Water Valve Handle*
18 *Inlet Valve Cap*
19 *Inlet Valve*
20 *Inlet Valve Seat*
21 *Steam Nozzle*
22 *Lifting Steam Nozzle*
23 *Intermediate Nozzle*
24 *Combining Nozzle*
24a *Combining Nozzle*
25 *Delivery Nozzle*
26 *Heater Cock Check*
28 *Nut for Heater Cock*
32 *Nozzle Holder*
33 *Line Check Valve*
35 *Emergency Valve*
36 *Packing Nut for Emergency Valve*
37 *Coupling Nut (overflow)*
38 *Tailpiece (steam)*
38a *Tailpiece (water)*
38b *Tailpiece (delivery)*
38c *Tailpiece (overflow)*
46 *Guide for Heater Cock*
47 *Heater Cock Spindle*
48 *Heater Cock Handle*
63 *Body Flange (steam)*
64 *Companion Flange (steam)*
65 *Bolt and Nut (steam)*
63a *Body Flange (water)*
64a *Companion Flange (water)*
65a *Bolt and Nut (water)*
63b *Body Flange (delivery)*
64b *Companion Flange (delivery)*
65b *Bolt and Nut (delivery)*

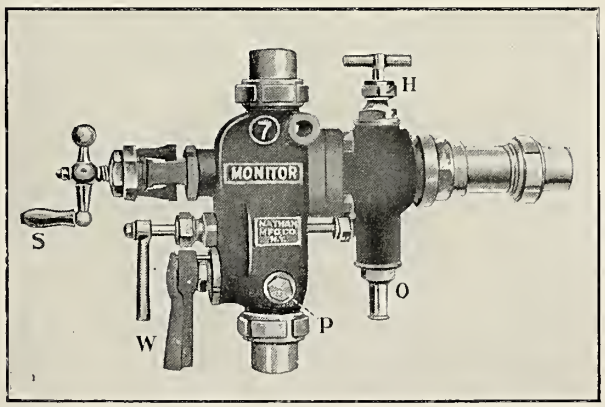

Fig. 1351—Monitor Injector; Nathan Manufacturing Company.

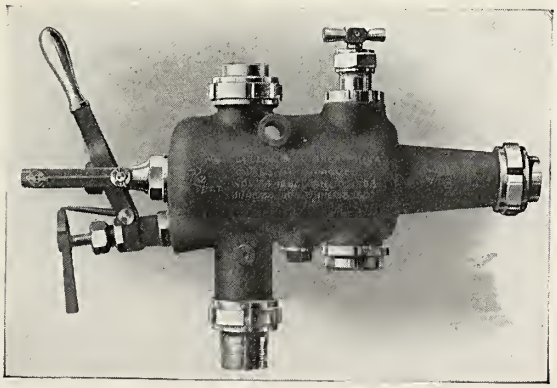

Fig. 1352—Sellers Class M Improved Injector; Wm. Sellers & Company, Inc.

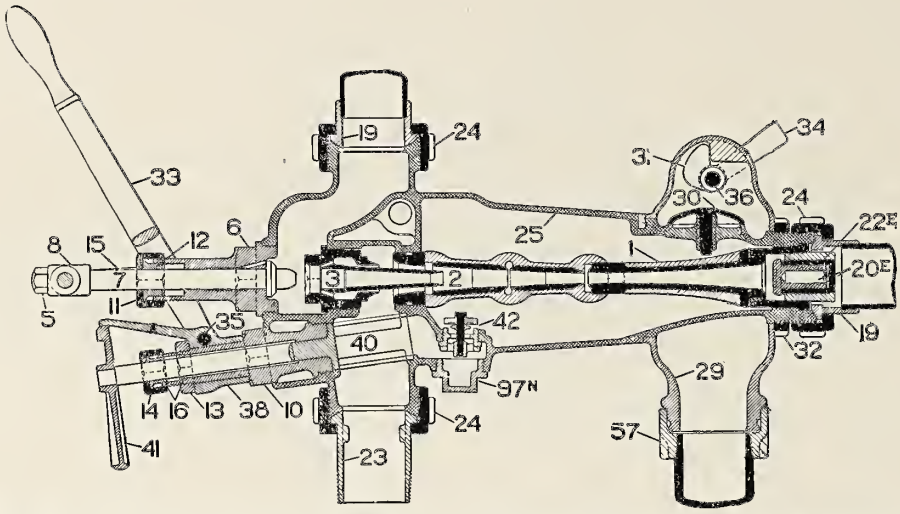

Fig. 1353—Sellers Class N Improved Self-Acting Injector; Wm. Sellers & Company, Inc.

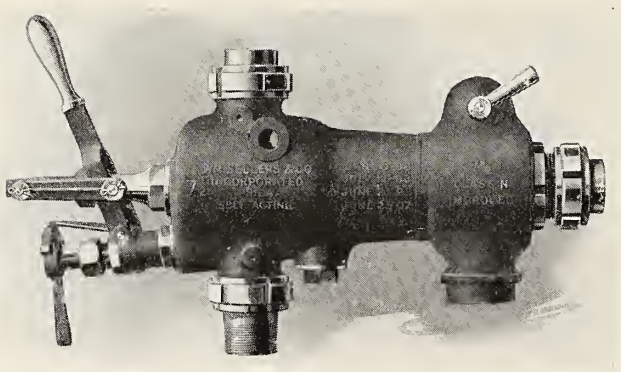

Fig. 1354—Sellers Class N Improved Self-Acting Injector; Wm. Sellers & Company, Inc.

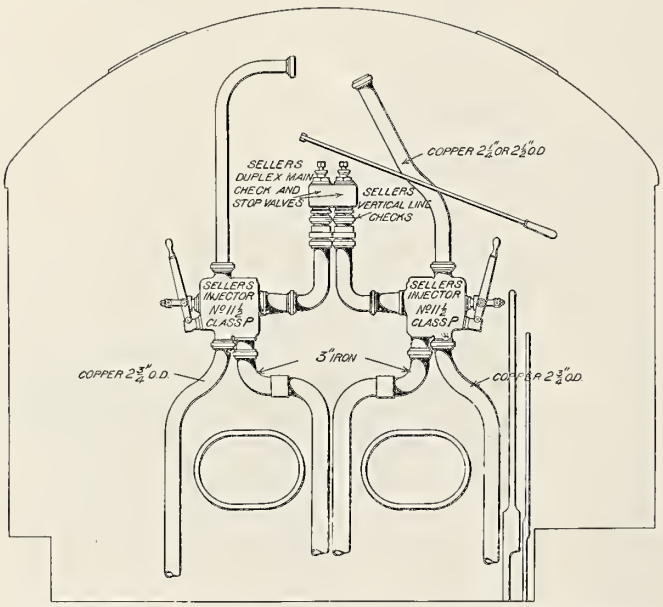

Fig. 1355—Arrangement of Sellers Injectors on Back Head of Boiler of Atlantic Type (4-4-2) Locomotive; Pennsylvania Railroad.

Names of Parts of Sellers Injector, Fig. 1353.

1 *Delivery Tube*
2 *Combining Tube*
3 *Steam Nozzles*
5 *Spindle Nut*
6 *Steam Stuffing Box*
7 *Spindle*
8 *Crosshead*
10 *Water Stuffing Box*
11 *Follower*
12 *Packing Ring*
13 *Lock Nut*
14 *Follower for No.* 10
15 *Links*
16 *Packing Ring*
19 *Ring for Copper Pipe*
20*e* *Check Valve*
22*e* *Guide for No.* 20
23 *Union for Iron Pipes*
24 *Coupling Nuts*
25 *Injector Body*
29 *Waste Pipe*
30 *Waste Valve*
31 *Waste Valve Cam*
32 *Jam Nut for No.* 29
33 *Starting Lever*
34 *Cam Lever*
35 *Pin, Nos.* 38 *and* 33
36 *Cam Shaft*
37 *Washer on* 36
38 *Collar and Index*
40 *Plug Water Valve*
41 *Regulating Handle*
42 *Inlet Valve*
57 *Overflow Pipe Connection*
97*n* *Cap under No.* 42

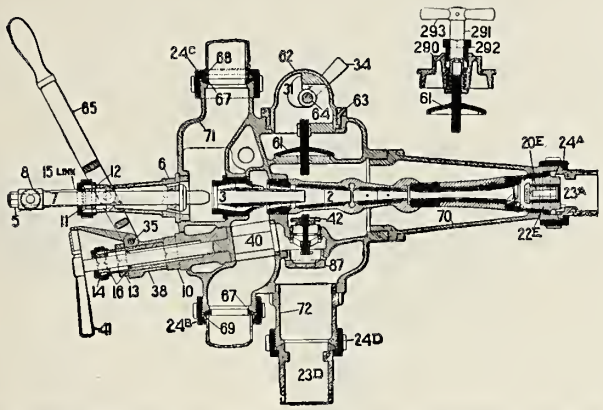

Fig. 1356—Sellers Class P Self-Acting Injector for Back Head of Boiler; Wm. Sellers & Company, Inc.

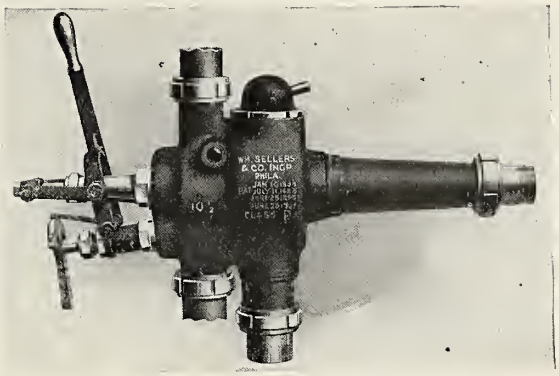

Fig. 1357—Sellers Class P Self-Acting Injector for Back Head of Boiler; Wm. Sellers & Company, Inc.

Names of Parts of Sellers Injector, Fig. 1356.

1 *Delivery Tube*
2 *Combining Tube*
3 *Steam Nozzles*
5 *Spindle Nut*
6 *Steam Stuffing Box*
7 *Spindle*
8 *Crosshead*
10 *Water Stuffing Box*
11 *Follower for No.* 6
12 *Packing Ring*
13 *Lock Nut*
14 *Follower for No.* 10
15*p* *Links*
16 *Packing Ring*
19 *Ring for Copper Pipe*
20*e* *Check Valve*
22*c* *Guide for No.* 20
23 *Delivery Union*
23*d* *Overflow Union*
24 *Coupling Nuts*
24*d* *Coupling Nut on No.* 72
31 *Waste Valve Cam*
34 *Cam Lever*
35 *Pin*
37 *Washer on No.* 64
38 *Collar and Index*
40 *Plug Water Valve*
41 *Regulating Handle*
42 *Inlet Valve*
61 *Waste Valve*
62 *Hood over No.* 61
63 *Jam Nut on No.* 62
64 *Cam Shaft*
65 *Starting Lever, Right Hand*
66 *Starting Lever, Left Hand*
67 *Seat Ring*
68 *Steam and Delivery Pipe Rings*
69 *Suction Pipe Ring*
70 *Lower Cylinder*
71 *Upper Cylinder*
72 *Waste Pipe*
87 *Cap under No.* 42
290 *Stuffing Box for Waste Valve*
291 *Heater Stem*
292 *Follower for No.* 290
293 *Heater Lever*

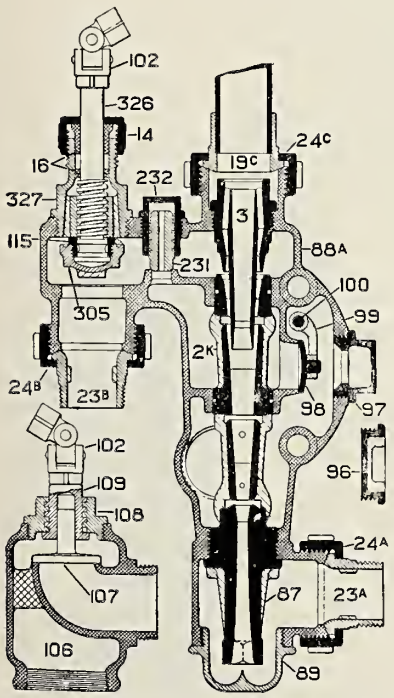

Fig. 1358—Sellers Class KNL Non-Lifting Self-Acting Injector for Hot Water; Wm. Sellers & Company, Inc.

Names of Parts of Sellers Injector, Fig. 1358.

2K *Combining Tube*
3 *Steam Nozzle*
14 *Follower*
16 *Packing Rings*
19 *Ring for Copper Pipe*
23 *Union for Iron Pipe*
24 *Coupling Nut*
87 *Delivery Tube*
88A *Body*
89 *Cap at end of Body*
96 *Cap opposite No.* 90
97 *Cap over No.* 98
98 *Hot Water Valve*
99 *Hinge for No.* 98
101 *Cap for No.* 100
102 *Universal Joint*
106 *Waste Pipe*
107 *Waste Valve*
108 *Cap over No.* 107
109 *Screw Stem*
115 *Nut on* 305
231 *Inlet Valve*
232 *Cap over No.* 231
305 *Lazy Cock Valve*
326 *Spindle*
327 *Stuffing Box*

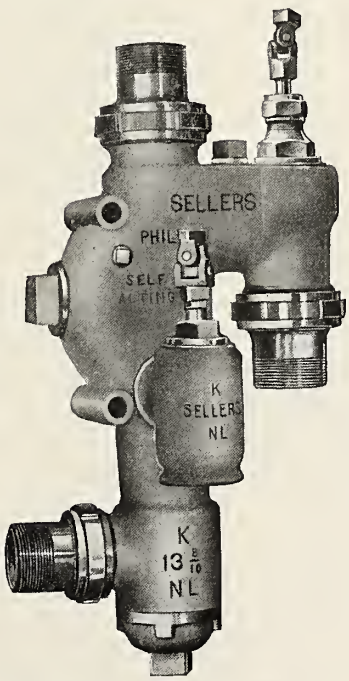

Fig. 1359—Sellers Class KNL Non-Lifting Self-Acting Injector. Operates with Water Supply 135 to 150 Deg.; Wm. Sellers & Company, Inc.

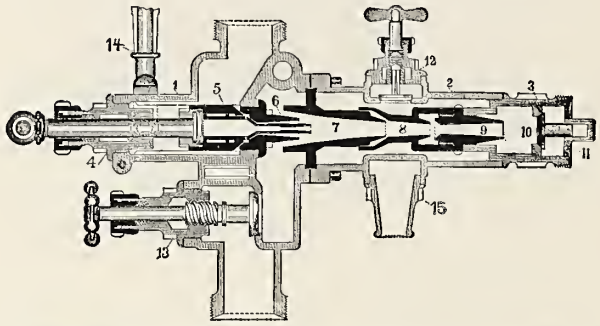

Fig. 1360—Ohio Standard A Injector; The Ohio Injector Company.

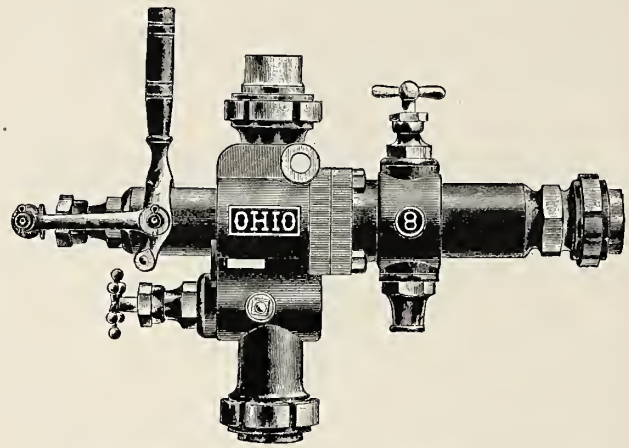

Fig. 1361—Ohio Standard A Injector; The Ohio Injector Company.

Names of Parts of Ohio Injector, Fig. 1360.

1 *Body (Back Part)*
2 *Body (Front Part)*
3 *Delivery End Connection*
4 *Steam Valve Hub Complete*
5 *Steam Valve and Primer Complete*
6 *Steam Nozzle*
7 *Lifting Tube*
8 *Combining Tube*
9 *Delivery Tube*
10 *Line Check Valve*
11 *Stop Ring*
12 *Overflow Valve Complete*
13 *Water Valve Complete*
14 *Lever*
15 *Overflow Nozzle*

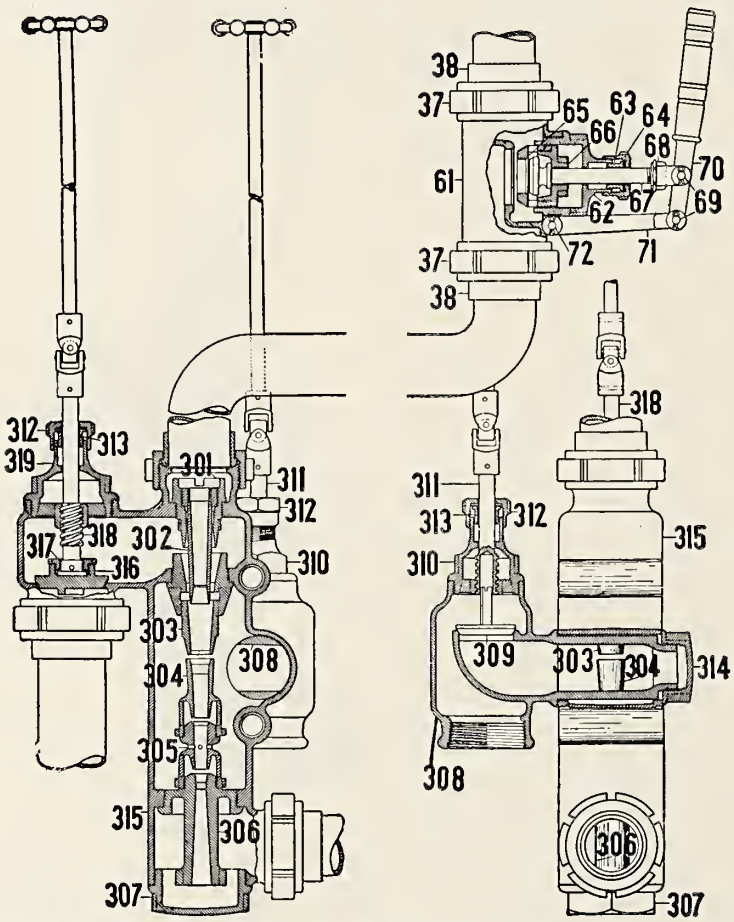

Fig. 1362—Chicago Standard M Non-Lifting Injector and Lever Steam Throttle Valve; The Ohio Injector Company.

Fig. 1363—Chicago Standard M Non-Lifting Injector; The Ohio Injector Company.

Numbers on Fig. 1362 Refer to Names of Parts on Page 559.

Names of Parts of Chicago Injector, Fig. 1362.

37 *Union Nut*
38 *Union Nipple*
61 *Body*
62 *Hub*
63 *Packing Gland*
64 *Packing Nut*
65 *Valve*
66 *Swivel Nut*
67 *Spindle*
68 *Crosshead*
69 *Lever Pin*
70 *Lever*
71 *Lever Link*
72 *Link Pin*
301 *Lifting Steam Jet*
302 *Forcing Steam Jet*
303 *Lifting Tube*
304 *Rear Combining Tube*
305 *Forward Combining Tube*
306 *Delivery Tube*
307 *Barrel Cap*
308 *Overflow Body*
309 *Overflow Check*
310 *Overflow Hub*
311 *Overflow Stem*
312 *Overflow or Water Valve Packing Nut*
313 *Overflow or Water Valve Packing Gland*
314 *Overflow Lock Nut*
315 *Body*
316 *Water Valve Disc*
317 *Water Valve Swivel Nut*
318 *Water Valve Stem*
319 *Water Valve Hub*

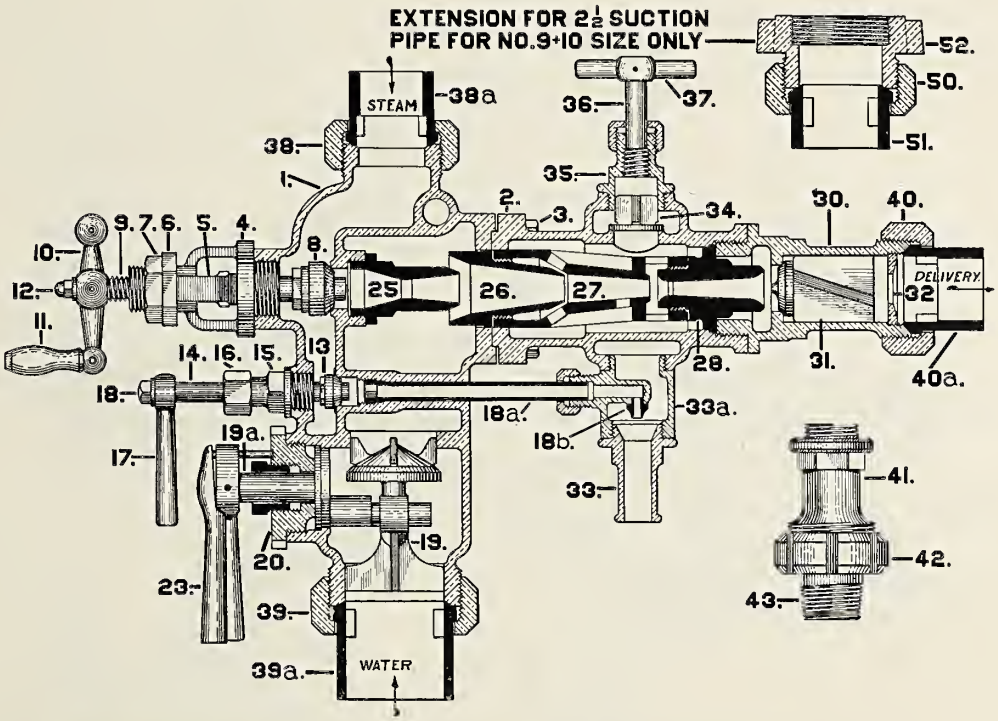

Fig. 1364—Edna Injector, Type A; Edna Brass Manufacturing Company.

Names of Parts of Edna Injector, Fig. 1364.

1 *Body Back Part*
2 *Body Front Part*
3 *Body Screw*
4 *Yoke*
5 *Yoke Gland*
6 *Yoke Packing Nut*
7 *Yoke Locknut*
8 *Steam Valve Disc and Nut*
9 *Steam Valve Spindle*
10 *Steam Valve Handle*
11 *Steam Valve Rubber Handle*
12 *Steam Valve Top Nut*
13 *Jet Valve Disc and Nut*
14 *Jet Valve Spindle*
15 *Jet Valve Bonnet and Nut*
16 *Jet Valve Gland*
17 *Jet Valve Handle*
18 *Jet Valve Top Nut*
18A *Jet Valve Tube*
18B *Lifting Nozzle*
19 *Water Valve*
19A *Eccentric Spindle*
20 *Water Valve Bonnet*
23 *Water Valve Lever Handle*
25 *Steam Nozzle*
26 *Intermediate Nozzle*
27 *Condensing Nozzle*
28 *Delivery Nozzle*
30 *Line Check Casing*
31 *Line Check Valve*
32 *Stop Ring*
33 *Overflow Nozzle*
33A *Overflow Chamber and Nut*
34 *Heater Cock Check*
35 *Heater Cock Bonnet and Nut*
36 *Heater Cock Spindle*
37 *Heater Cock T Handle*
38 *Coupling Nut—Steam*
39 *Coupling Nut—Water*
40 *Coupling Nut—Delivery*
38A *Tail Piece—Steam*
39A *Tail Piece—Water*
40A *Tail Piece—Delivery*

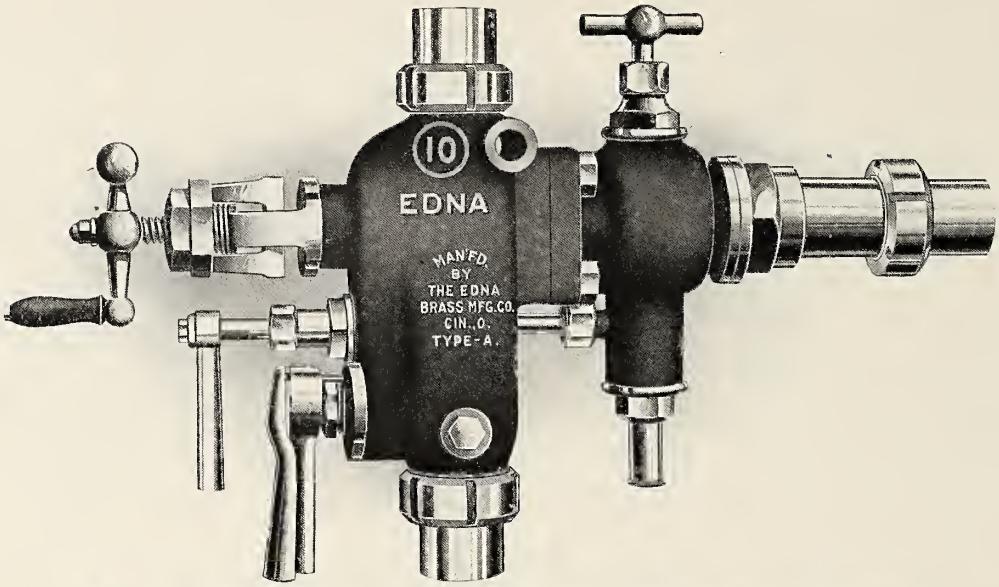

Fig. 1365—Edna Injector, Type A; Edna Brass Manufacturing Company.

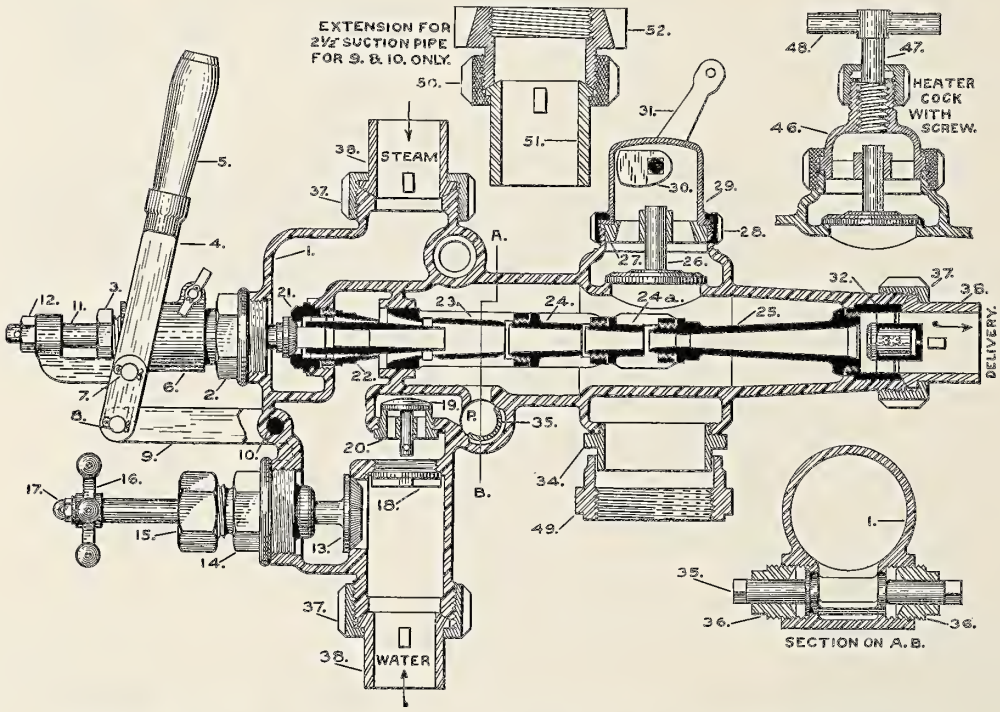

Fig. 1366—Edna Injector, Type L; Edna Brass Manufacturing Company.

Names of Part of Edna Injector, Fig. 1366.

1	*Body*	16	*Water Valve Handle*	30	*Cam*
2	*Steam Bonnet*	17	*Water Valve Top Nut*	31	*Cam Lever*
3	*Steam Packing Nut*	18	*Inlet Valve Cap*	32	*Nozzle Holder*
4	*Lever*	19	*Inlet Valve*	33	*Line Check Valve*
5	*Lever Handle*	20	*Inlet Valve Seat*	34	*Overflow Nozzle*
6	*Guide for Steam Spindle*	21	*Steam Nozzle*	35	*Emergency Valve*
7	*Guide Pin*	22	*Lifting Steam Nozzle*	36	*Packing Nut for Emergency Valve*
8	*Lever Pin*	23	*Intermediate Nozzle*	37	*Coupling Nut*
9	*Fulcrum Bar*	24	*Combining Nozzle*	38	*Tailpiece*
10	*Fulcrum Pin*	24A	*Combining Nozzle*	46	*Guide for Heater Cock Check*
11	*Steam Spindle*	25	*Delivery Nozzle*	47	*Heater Cock Spindle*
12	*Locknut*	26	*Heater Cock Check*	48	*Heater Cock Handle*
13	*Water Valve*	27	*Guide for Heater Cock Check*	49	*Overflow Pipe Sleeve*
14	*Water Valve Bonnet*	28	*Nut for Cam Casing*	50	*Coupling Nut*
15	*Water Valve Nut*	29	*Cam Casing*	51	*Tailpiece*
				52	*Extension Coupling Nut*

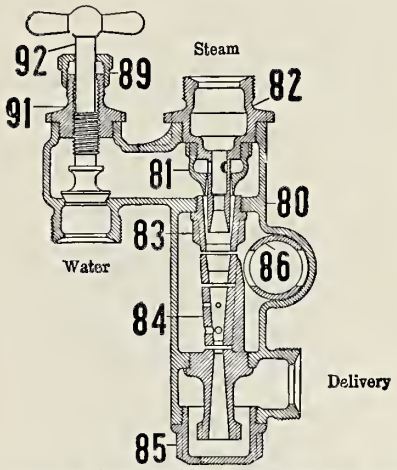

Section through Tubes and Water Valve

Names of Parts of Fig. 1367.

80 *Body*
81 *Lifting Steam Jet*
82 *Forcing Steam Jet*
83 *Lifting Tube*
84 *Forcing Tube*
85 *Barrel Cap*
86 *Overflow Body*
87 *Overflow Hub*
88 *Overflow Stem*
89 *Overflow or Water Valve Packing Nut*
90 *Overflow Lock Nut*
91 *Water Valve Hub*
92 *Water Valve Spindle*
93 *Overflow Check*

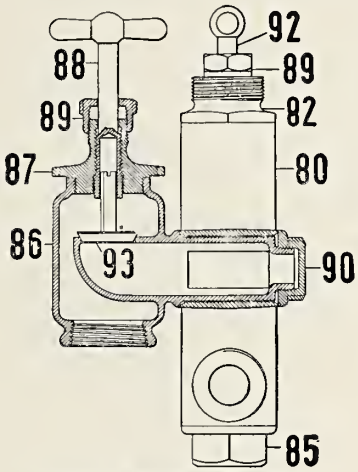

Section through Overflow

Fig. 1367—Non-Lifting Injector; Davenport Locomotive Works.

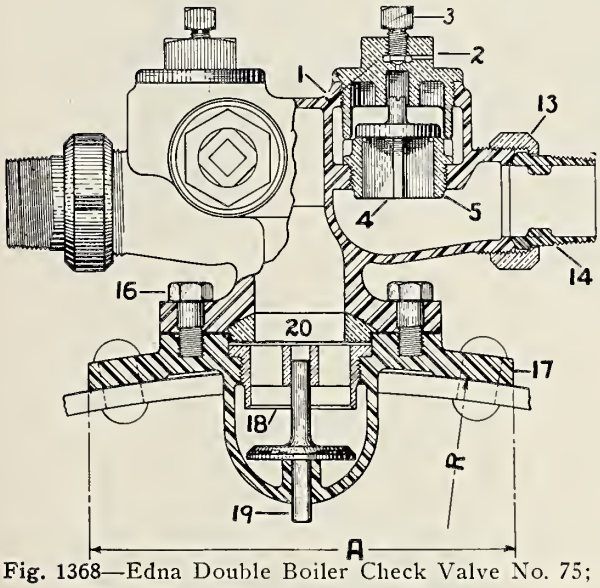

Fig. 1368—Edna Double Boiler Check Valve No. 75; Edna Brass Manufacturing Company.

Names of Parts of Fig. 1368.

1 *Body*
2 *Check Valve Cap*
3 *Relief Plug*
4 *Check Valve*
5 *Check Valve Seat*
13 *Coupling Nut*
14 *Tail Piece*
16 *Stud and Nut*
17 *Boiler Flange*
18 *Check Guide*
19 *Check Valve*
20 *Ball Joint Ring*

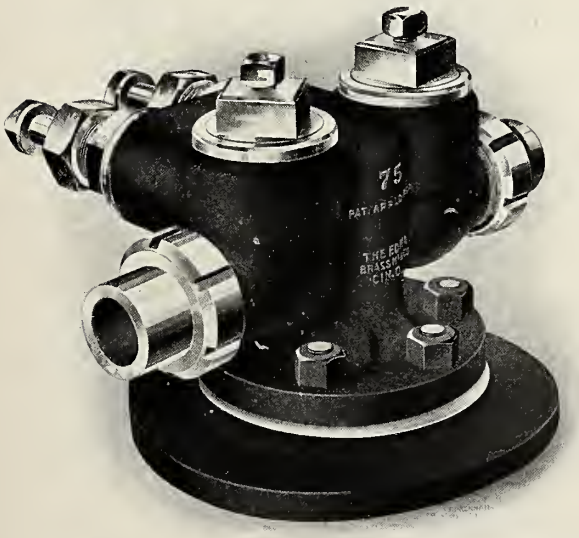

Fig. 1369—Edna Double Boiler Check Valve No. 75; Edna Brass Manufacturing Company.

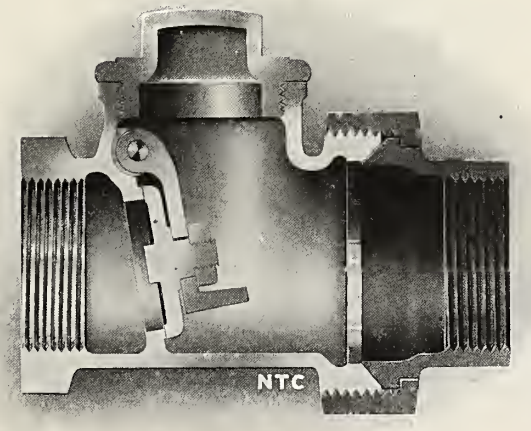

Fig. 1370—Kewanee Union Swing Check Valve; National Tube Company.

Names of Parts of Check Valves, Fig. 1371.

1 *Valve*
2 *Stop*
3 *Case*
4 *Inside Boiler Delivery Pipe*

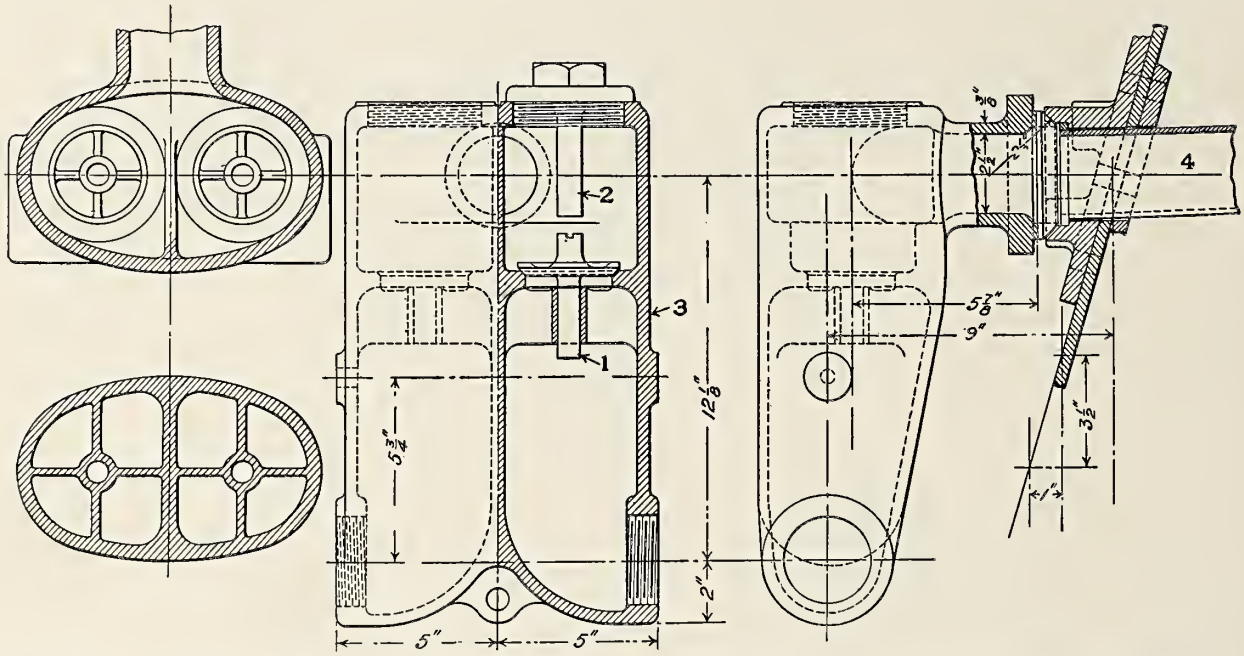

Fig. 1371—Check Valve for Back Head of Boiler of Atlantic Type (4-4-2) Locomotive; Pennsylvania Railroad.

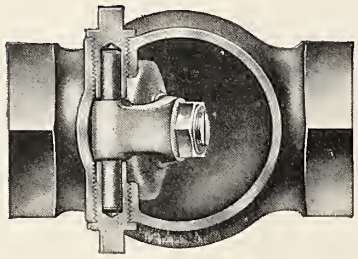

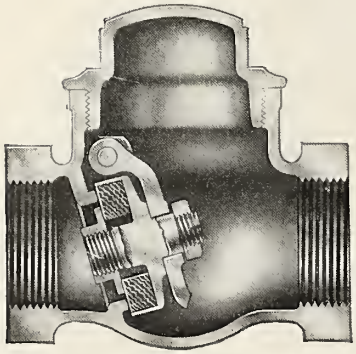

Fig. 1372—Swing Check Valve; Jenkins Brothers.

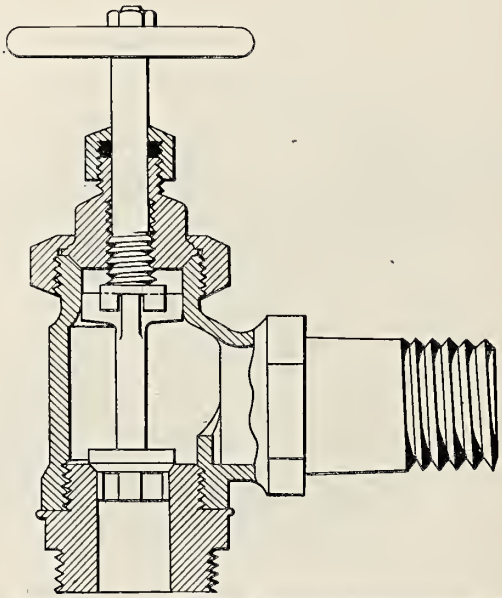

Fig. 1373—Osman Check Valve with Removable Seat; Swenson Valve Company.

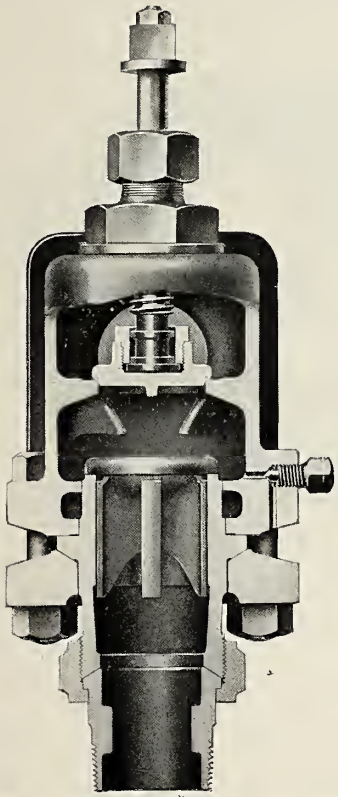

Fig. 1374—Hancock Vertical Check Valve with Stop Valve, Bottom Inlet and Flange Union; Hancock Inspirator Company.

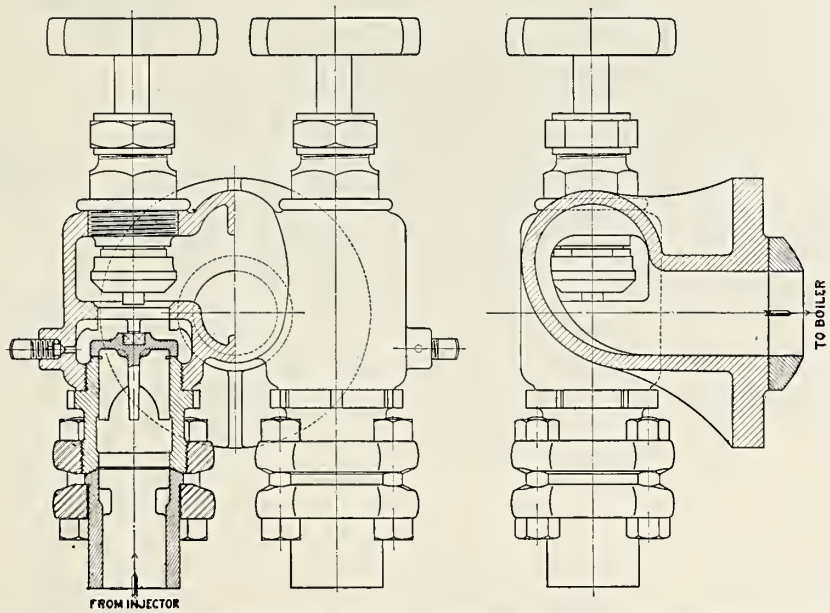

Fig. 1375—Double Check Valve, Type 293; Nathan Manufacturing Company.

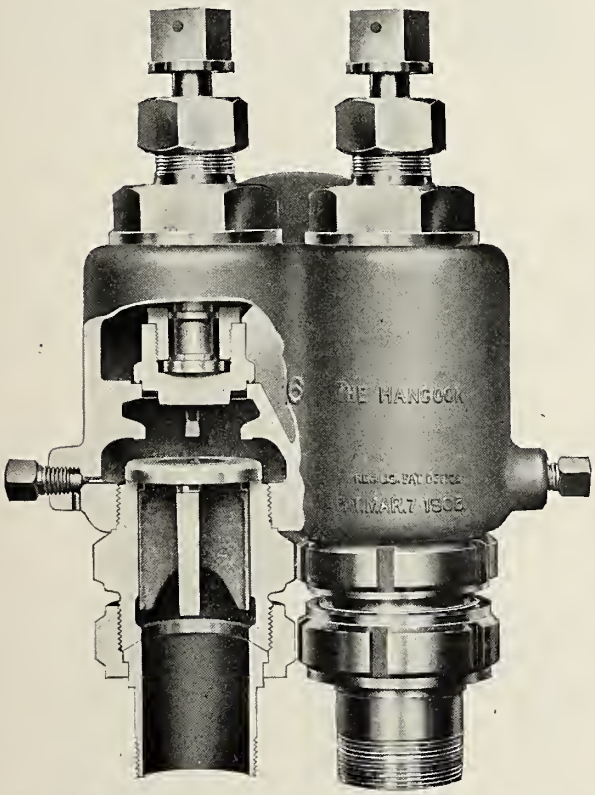

Fig. 1376—Hancock Double Vertical Check Valve with Double Stop Valve; Hancock Inspirator Company.

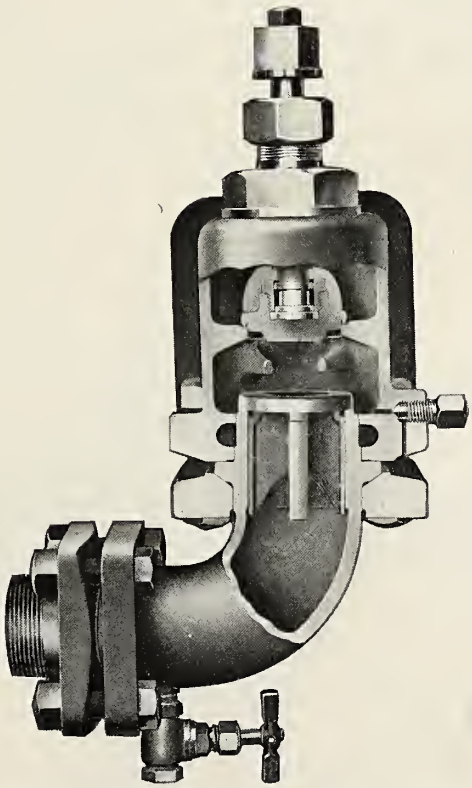

Fig. 1377—Hancock Vertical Check Valve with Stop Valve, and uarter Turn Inlet with Flange Union; Hancock Inspirator Company.

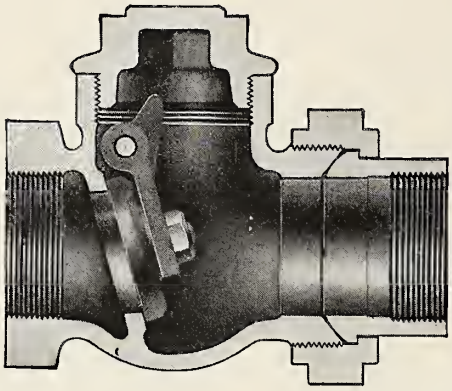

Fig. 1378—Intermediate or Line Swing Check Valve; Crane Company.

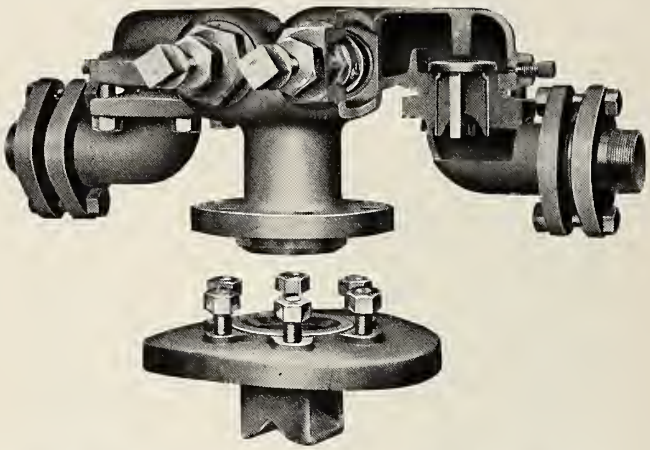

Fig. 1379—Hancock Double Vertical Check Valve with Double Stop Valves for Application to Top of Boiler; The Hancock Inspirator Company.

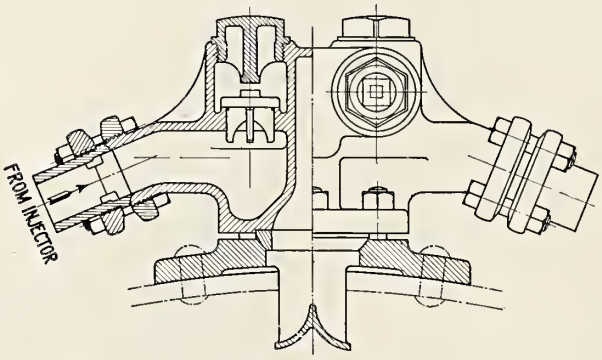

Fig. 1380—Check Valve, Type T; Nathan Manufacturing Company.

Fig. 1381—Check Valve, Type T; Nathan Manufacturing Company.

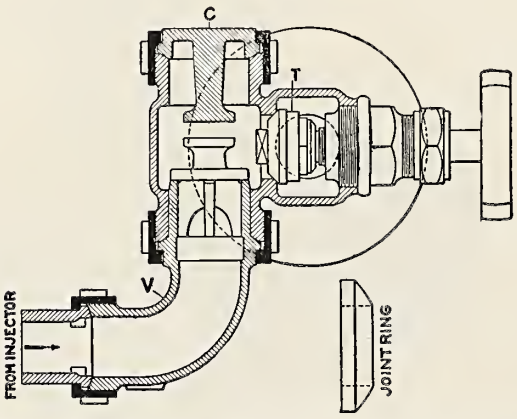

Fig. 1382—Reversible Check Valve and Stop Valve; Nathan Manufacturing Company.

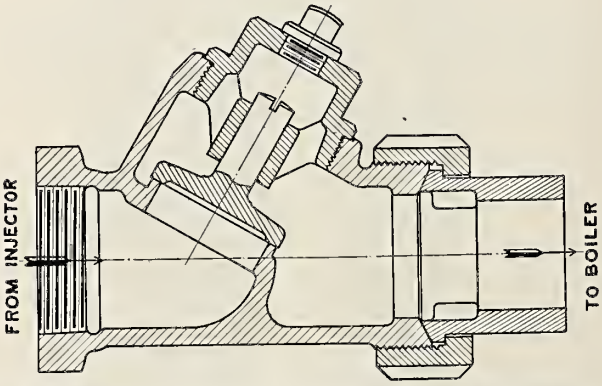

Fig. 1383—Intermediate or Line Check Valve; Nathan Manufacturing Company.

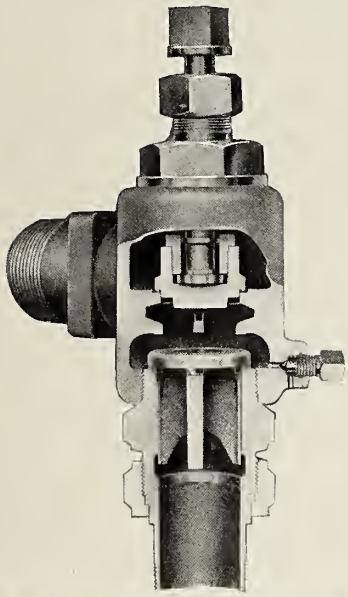

Fig. 1384 — Hancock Vertical Check Valve with Stop Valve and Bottom Inlet; Hancock Inspirator Company.

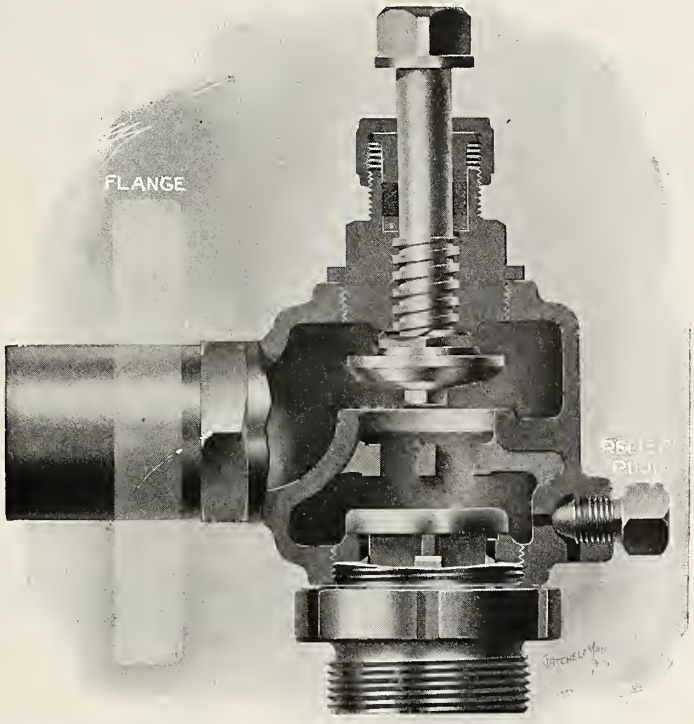

Fig. 1385—Sellers Combined Main Check and Stop Valve; William Sellers & Company, Inc.

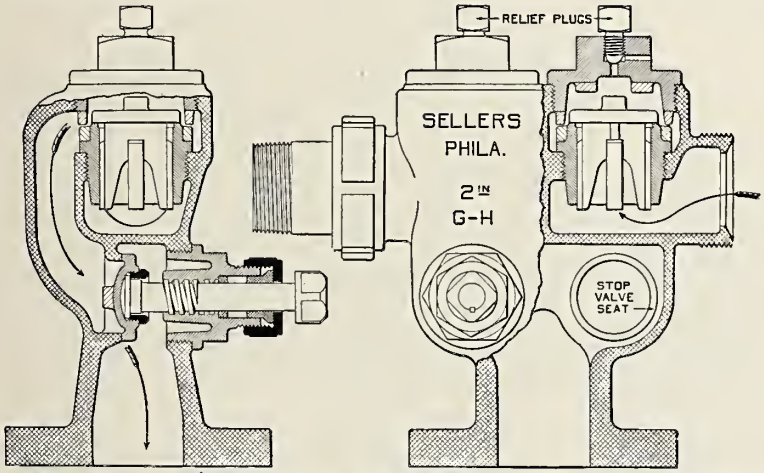

Fig. 1386—Sellers Duplex Top Check Valve with Independent Stop Valve, Style GH; William Sellers & Company, Inc.

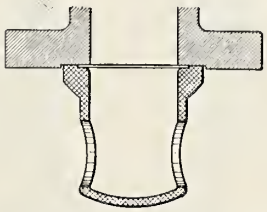

Fig. 1387—Seat Ring or Ball Attachment Between Valve Flange and Boiler Shell; William Sellers & Company, Inc.

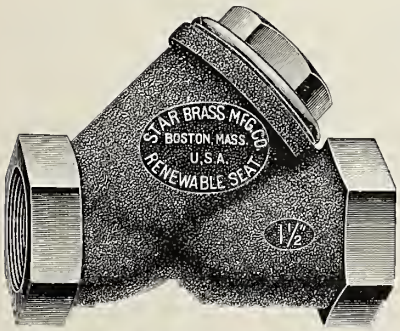

Fig. 1388—Star Renewable Line Check Valve; Star Brass Manufacturing Company.

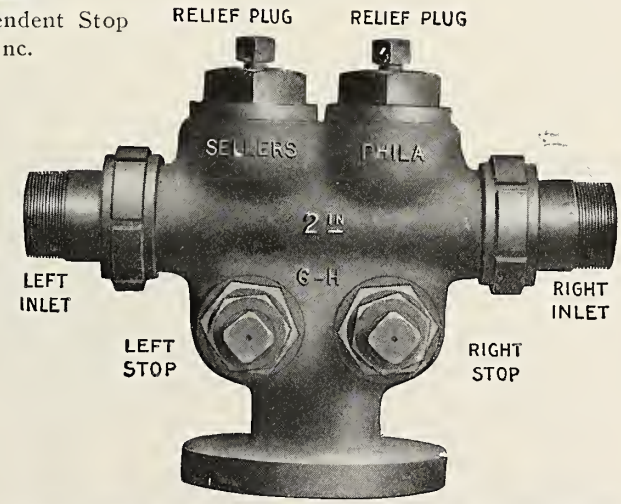

Fig. 1389—Sellers Duplex Top Check Valve with Independent Stop Valve, Style GH; William Sellers & Company, Inc.

Names of Parts of Check Valve, Fig. 1390.

37 *Union Nut*
39 *Union Nipple*
51 *Check Valve*
52 *Positive Valve*
53 *Swivel Nut*
54 *Spindle*
55 *Hub*
56 *Packing Gland*
57 *Packing Nut*
58 *Handle*
59 *Handle Nut*
74 *Body with Flange*
75 *Body with Nipple*
76 *Valve Seat*

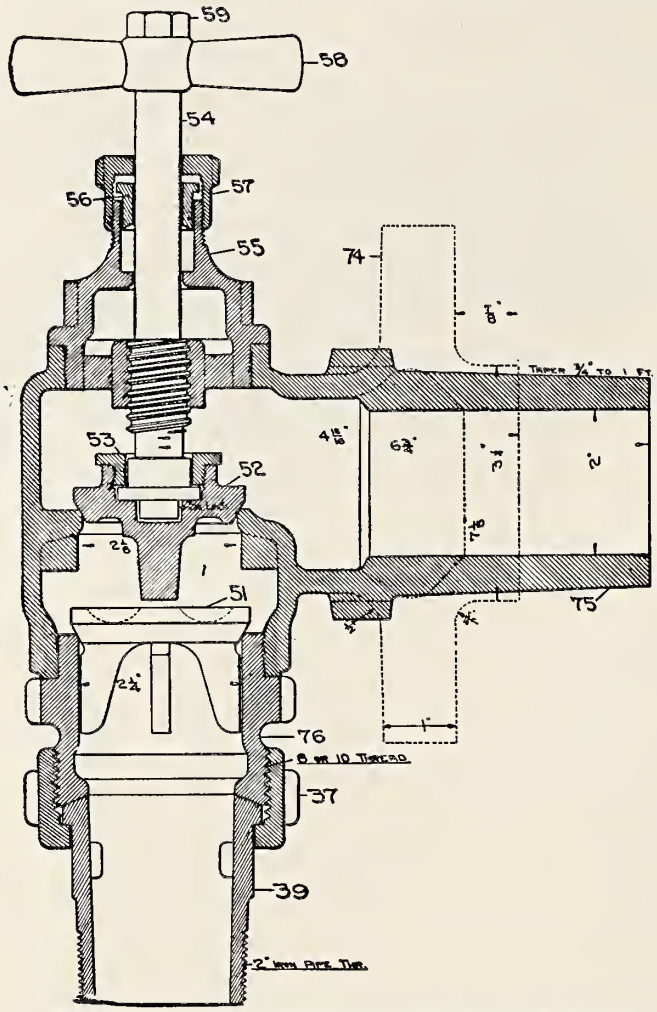

Fig. 1390—Ohio Combination Check and Stop Valve; The Ohio Injector Company.

Names of Parts of Ohio Boiler Washer, Fig. 1391

31 *Coupling Nut*
32 *Coupling*
110 *Body*
111 *Washer Steam Valve Stem*
112 *Washer Packing Nut*
113 *Washer Packing Gland*
114 *Washer Hub*
115 *Washer Steam Nozzle*
116 *Washing Forcing Tube*
117 *Washer Back Pressure Check Valve*
118 *Washer Back Pressure Check Valve Cap*
119 *Tester Steam Valve Stem*
120 *Tester Packing Nut*
135 *Tester Packing Gland*
136 *Tester Hub*
137 *Tester Steam Nozzle*
138 *Tester Forcing Tube*
139 *Tester Back Pressure Check Valve*
140 *Tester Back Pressure Check Valve Cap*
141 *Water Regulating Valve Stem*
142 *Water Regulating Valve Packing Nut*
143 *Water Regulating Valve Hub*
144 *Pressure Regulating Valve Stem*
145 *Pressure Regulating Valve Packing Nut*
146 *Pressure Regulating Valve Hub*
147 *Pressure Gauge Valve Complete*

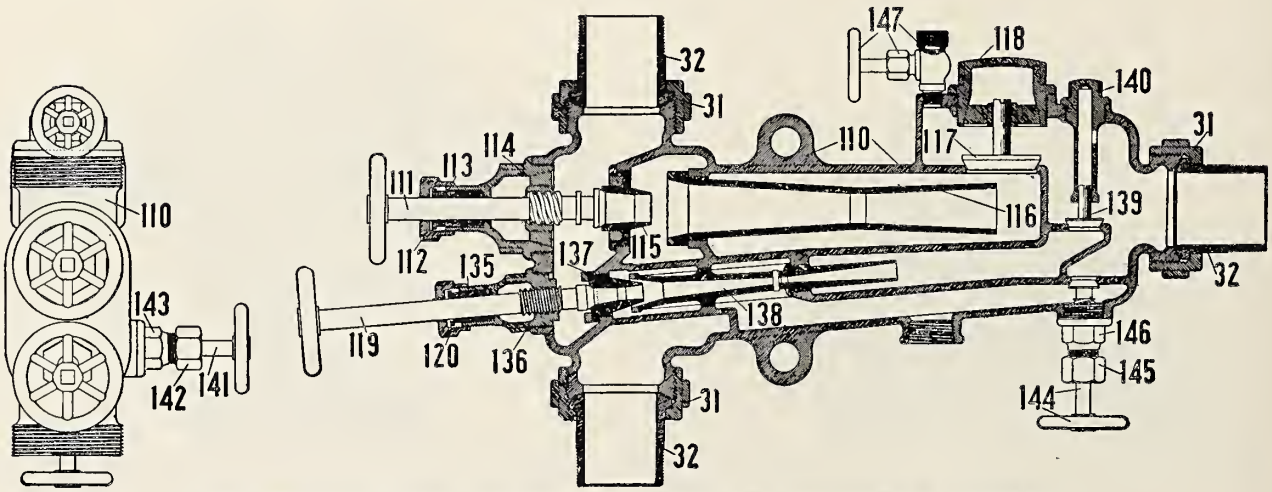

Fig. 1391—Ohio Boiler Washer and Tester; The Ohio Injector Company.

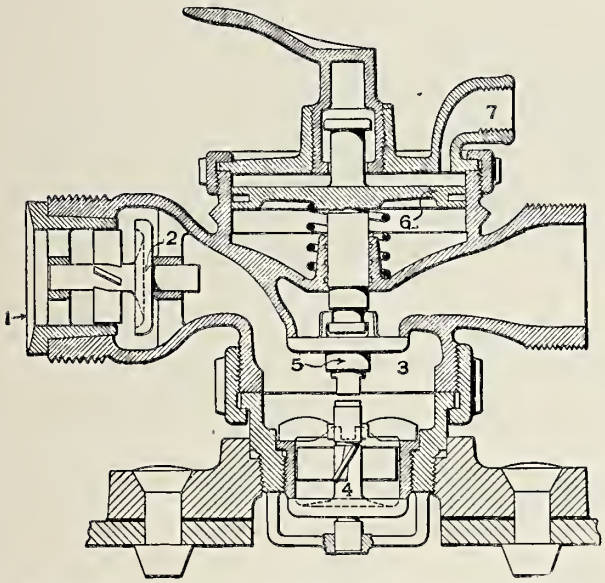

Fig. 1392—Quadruple Safety Check Valve; Central Railroad of New Jersey.

Names of Parts of Check Valve, Fig. 1392

1 *Delivery Connection*
2 *Check Valve*
3 *Pressure Chamber*
4 *Delivery Check*
5 *Blow-off Valve*
6 *Blow-off Operating Piston*
7 *Blow-off Outlet*

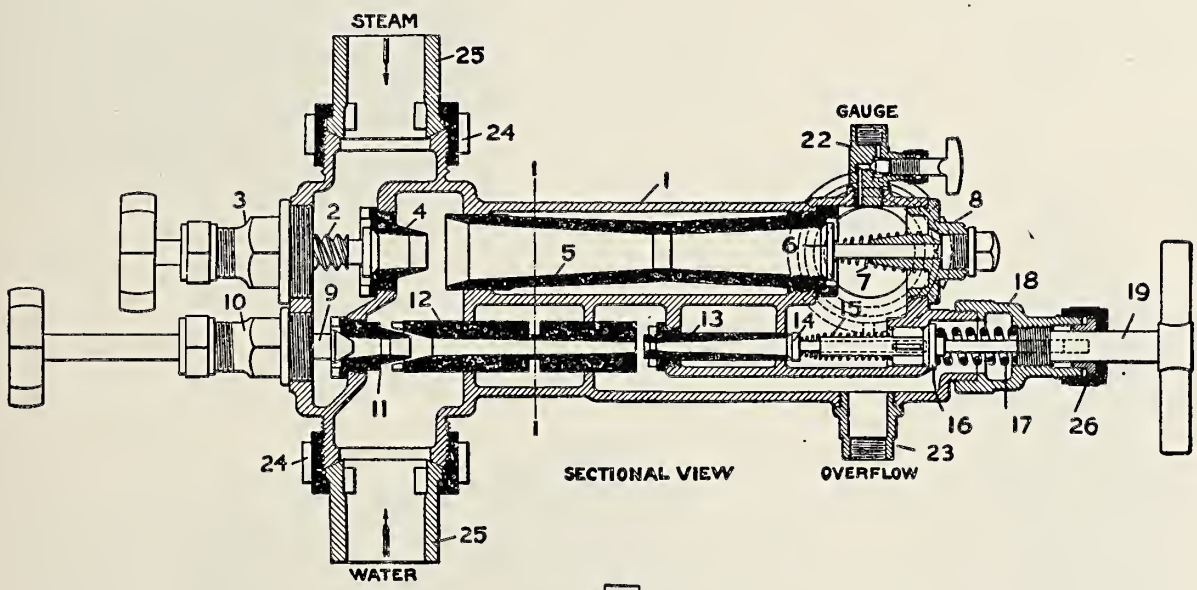

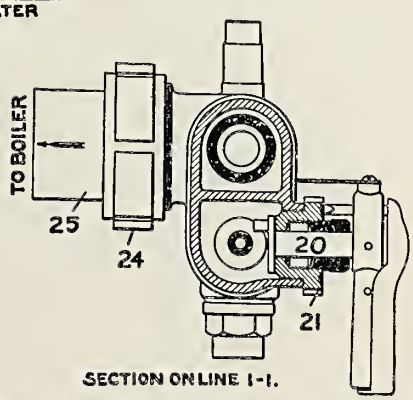

Fig. 1393—Nathan Patent Boiler Washer and Tester; Nathan Manufacturing Company.

1 *Body for Washer*
2 *Steam Valve for Washer*
3 *Steam Valve Bonnet for Washer*
4 *Steam Nozzle for Washer*
5 *Delivery Nozzle for Washer*
6 *Check Valve for Washer*
7 *Spring for Washer*
8 *Cap for Washer*
9 *Steam Valve for Tester*
10 *Steam Valve Bonnet for Tester*
11 *Steam Nozzle for Tester*
12 *Condensing Nozzle for Tester*
13 *Delivery Nozzle for Tester*
14 *Check Valve for Tester*
15 *Spring for Tester*
16 *Pressure Valve*
17 *Pressure Spring*
18 *Pressure Valve Cap*
19 *Pressure Valve Spindle*
20 *Regulating Valve Spindle*
21 *Regulating Valve Cap*
22 *Gage Plug*
23 *Overflow*
24 *Coupling Nut*
25 *Tailpiece*
26 *Pressure Valve Packing Nut*

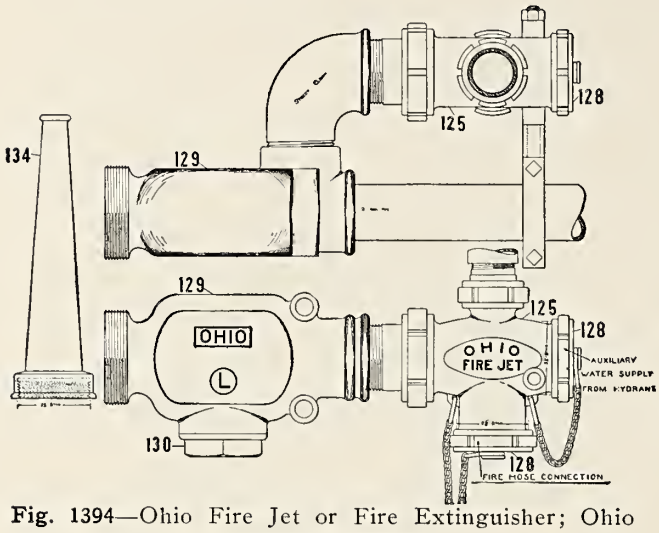

Fig. 1394—Ohio Fire Jet or Fire Extinguisher; Ohio Injector Company.

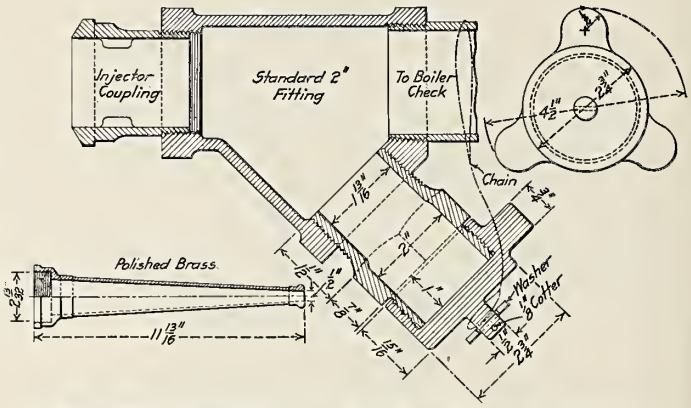

Fig. 1395—Connection for Fire Hose Used on Injector Delivery Pipe; Rock Island.

Names of Parts of Fig. 1394.

125	*Fire Jet Body*	129	*Strainer Body*	132	*Plate Washer*
126	*Steam Jet*	130	*Strainer Cap*	133	*Plate Bolt*
127	*Forcing Tube*	131	*Strainer Plate*	134	*Hose Nozzle*
128	*Connection Cap*				

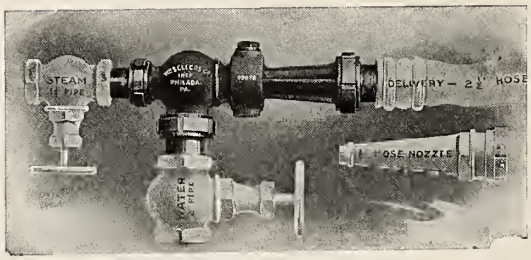

Fig. 1397—Sellers Boiler Washer, Filler and Fire Extinguisher; William Sellers & Company, Inc.

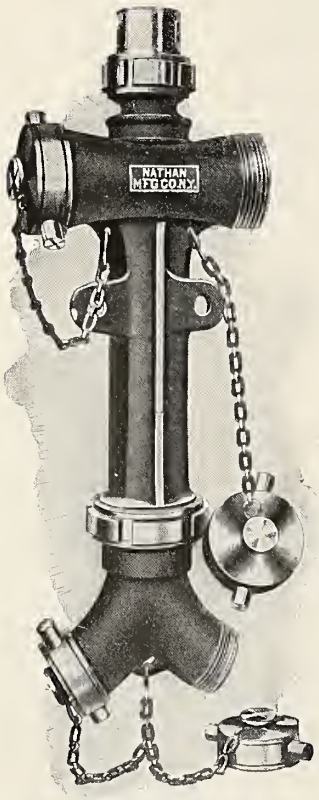

Fig. 1396—Nathan Steam Fire Extinguisher; Nathan Manufacturing Company.

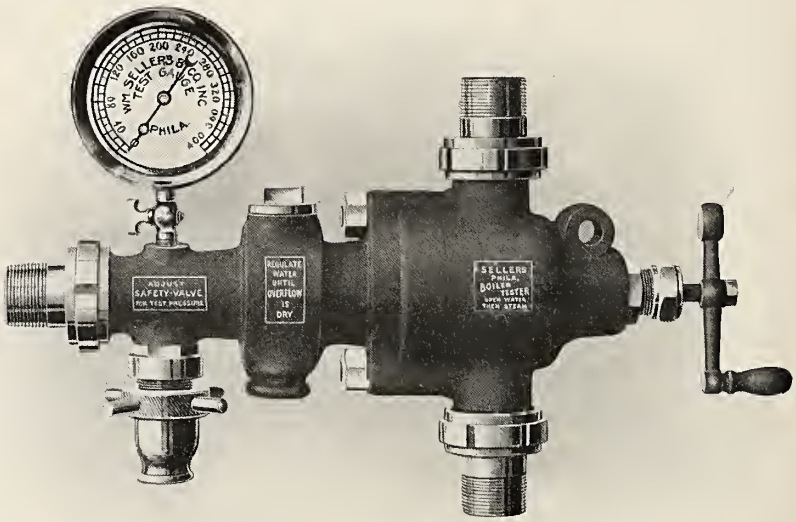

Fig. 1398—Improved Boiler Tester; William Sellers & Company, Inc.

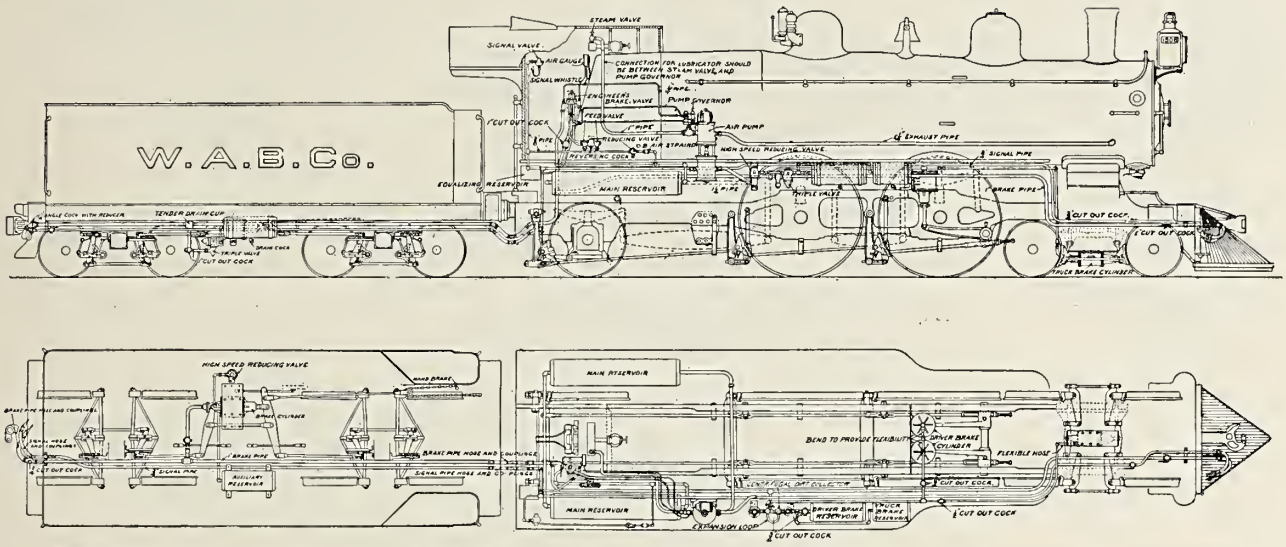

Fig. 1399—General Arrangement of Westinghouse Air Brake on a High-Speed Passenger Locomotive.

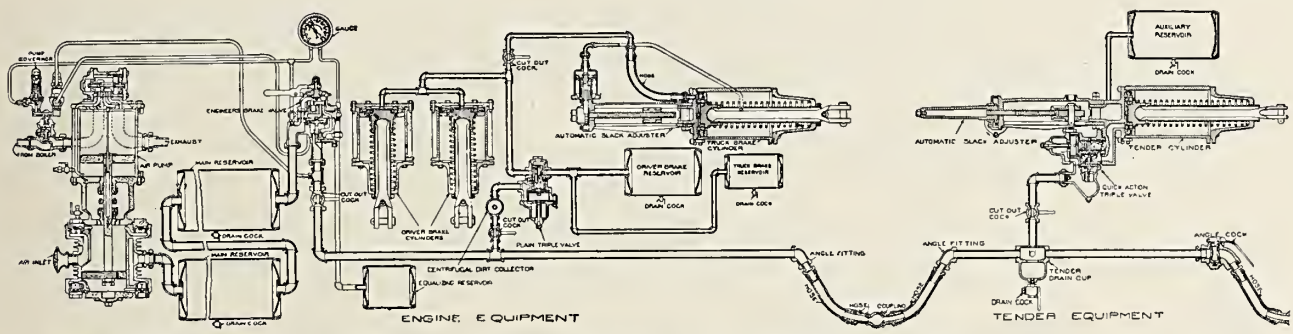

Fig. 1400—Diagram of Engine and Tender Equipment of Westinghouse Quick-Action Automatic Air Brake for Passenger Locomotives.

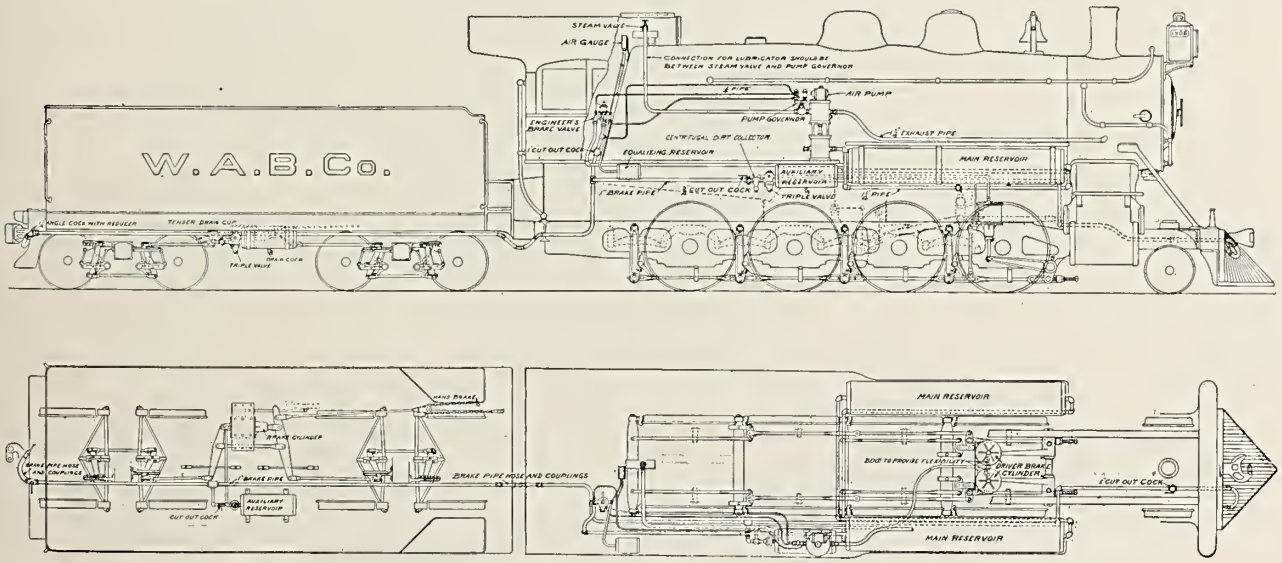

Fig. 1401—General Arrangement of Westinghouse Air Brake with Double-Pressure Control on a Freight Locomotive.

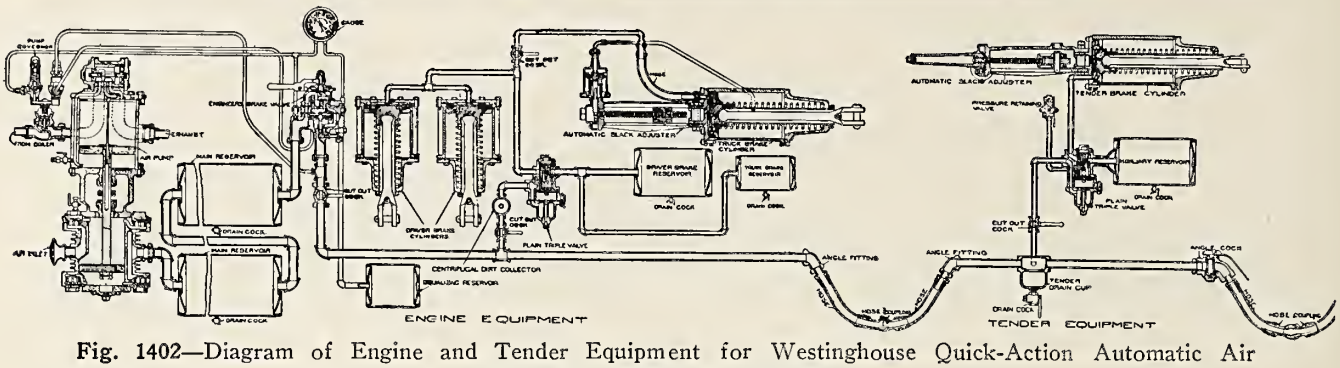

Fig. 1402—Diagram of Engine and Tender Equipment for Westinghouse Quick-Action Automatic Air Brake for Freight Locomotives.

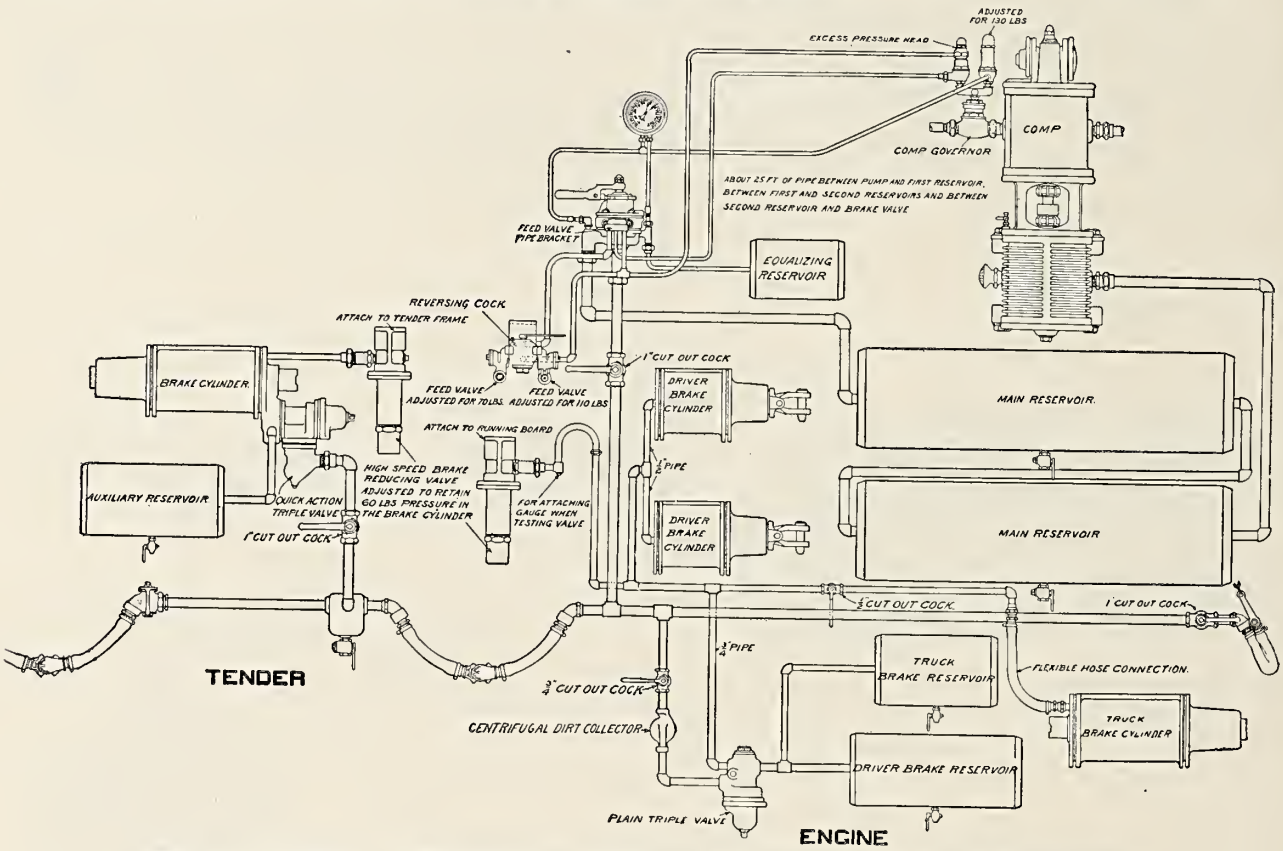

Fig. 1403—Diagram of Westinghouse High-Speed Locomotive Air Brake Equipment.

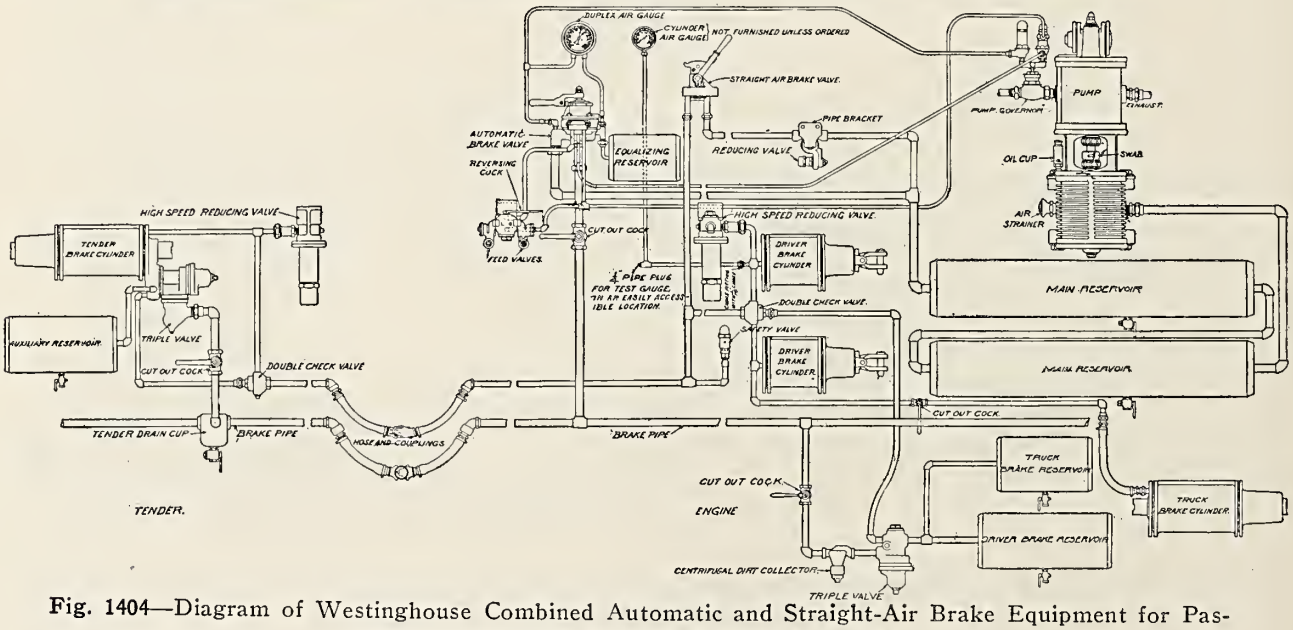

Fig. 1404—Diagram of Westinghouse Combined Automatic and Straight-Air Brake Equipment for Passenger Locomotive with High-Speed Air Brake.

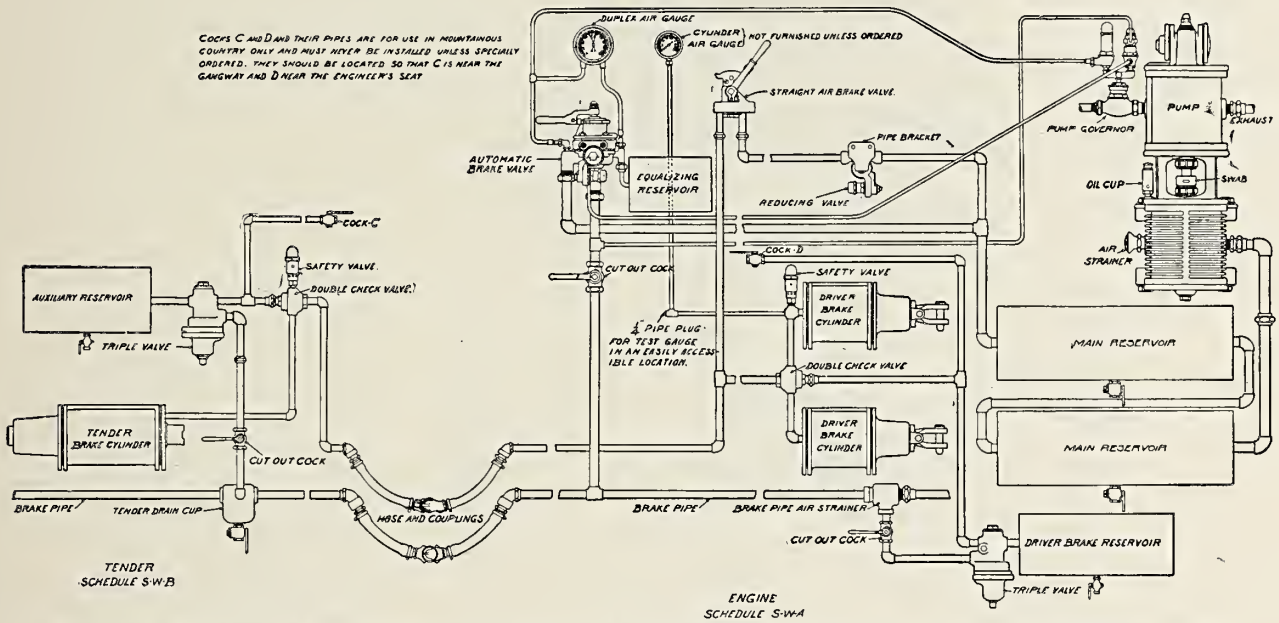

Fig. 1405—Diagram of Westinghouse Combined Automatic and Straight Air Locomotive Brake Equipment for Freight or Switching Locomotive.

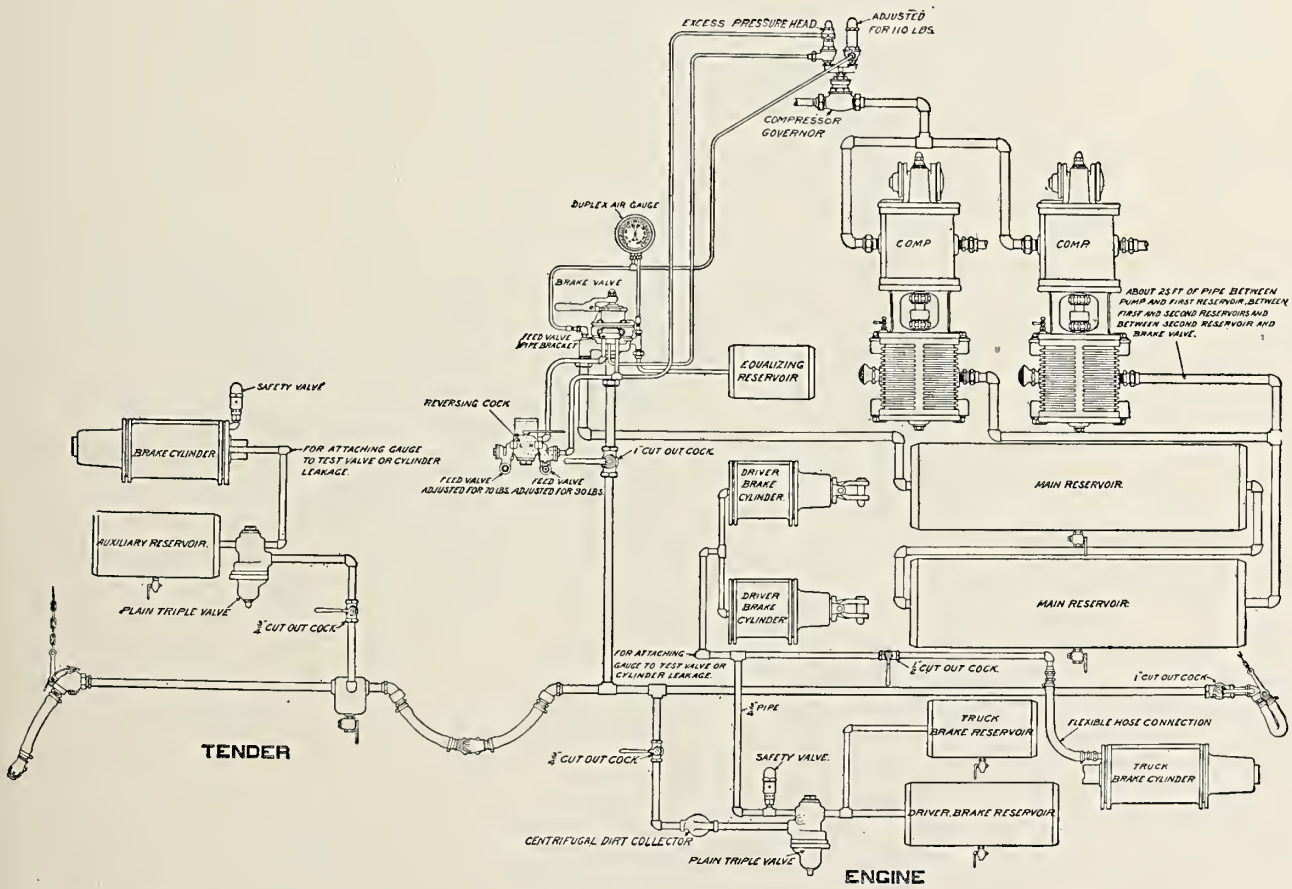

Fig. 1406—Diagram of Westinghouse Double Pressure Control Locomotive Air Brake Equipment.

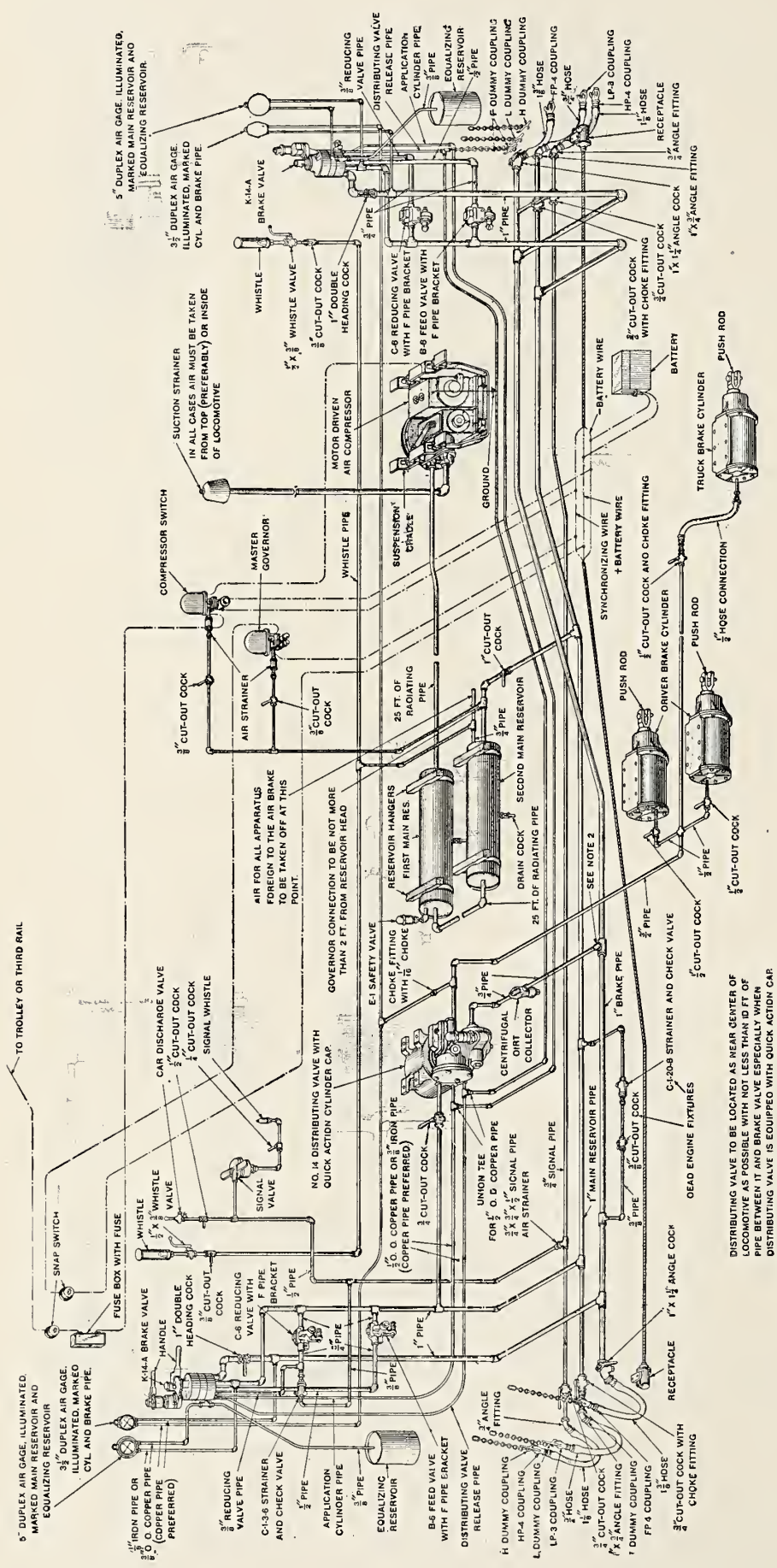

Fig. 1407—Diagram of Westinghouse EL Locomotive Air Brake Equipment for Double End Electric Locomotive.

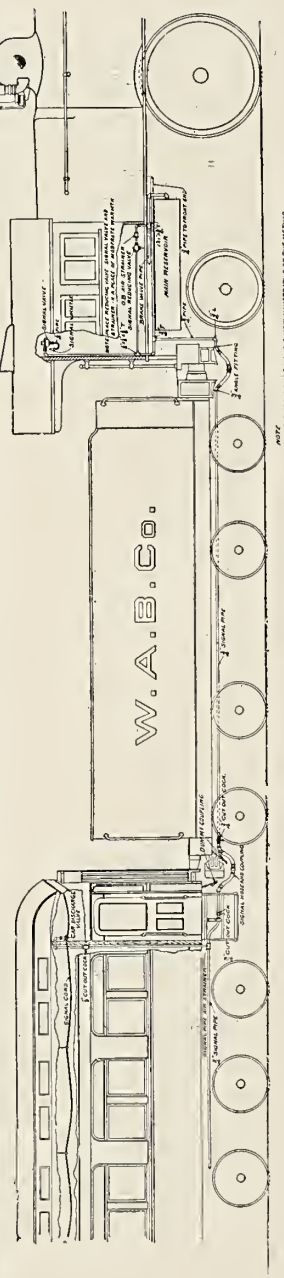

Fig. 1408—Diagram of Westinghouse Train Air Signal Equipment.

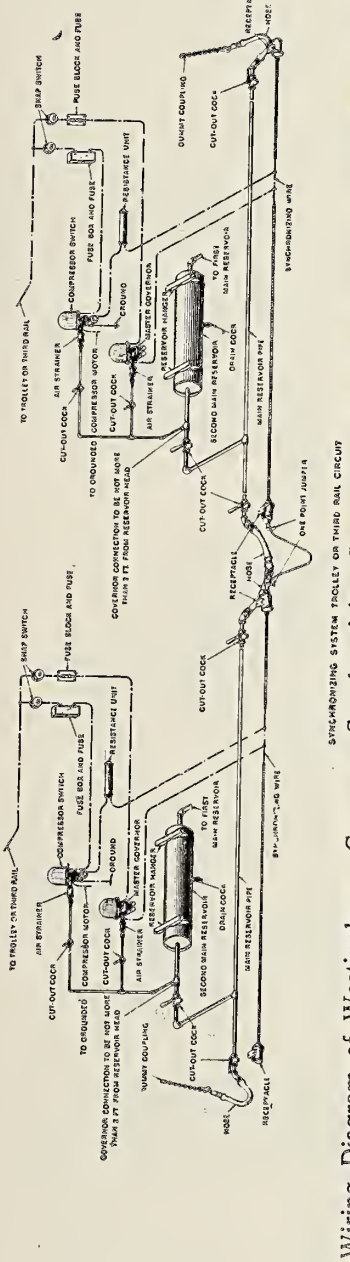

Fig. 1409—Wiring Diagram of Westinghouse Governor Synchronizing System for Insuring Uniform Compressor Labor, Trolley Circuit.

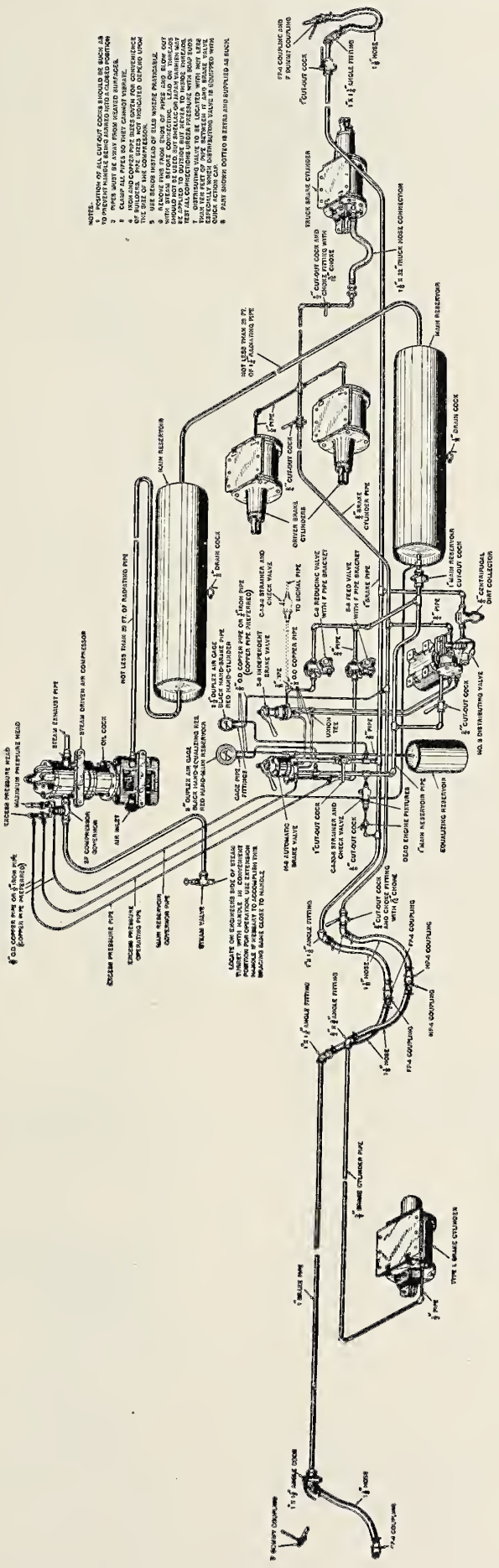

Fig. 1410—Diagram of Westinghouse ET Locomot ive Air Brake Equipment.

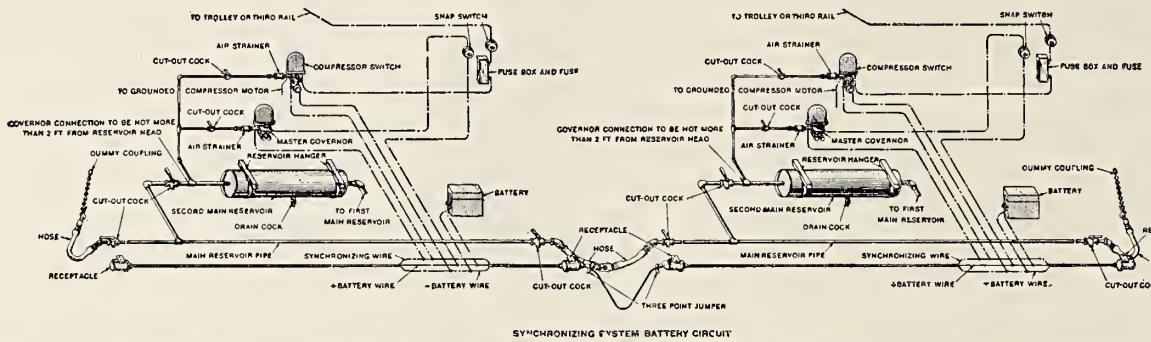

Fig. 1411—Wiring Diagram of Westinghouse Governor Synchronizing System for Insuring Uniform Compressor Labor, Battery Circuit.

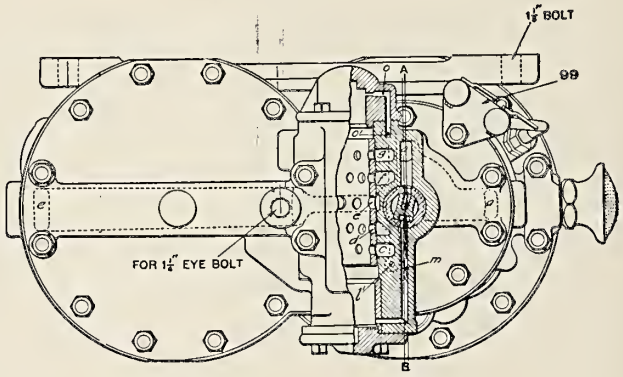

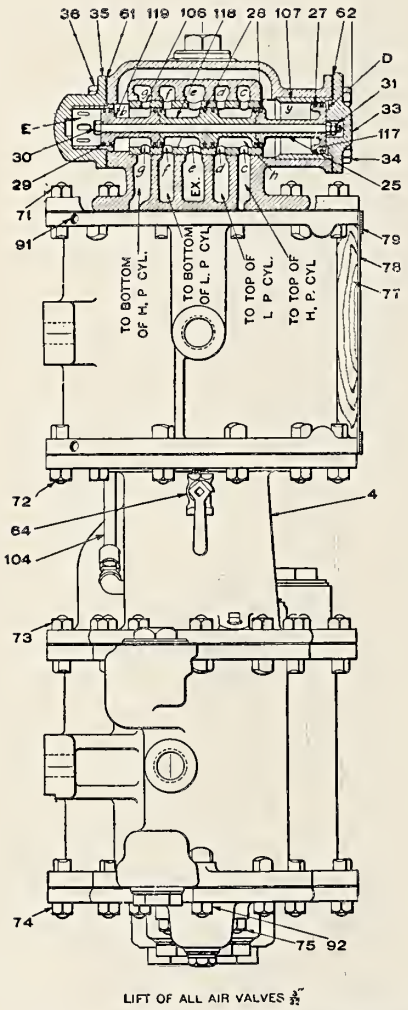

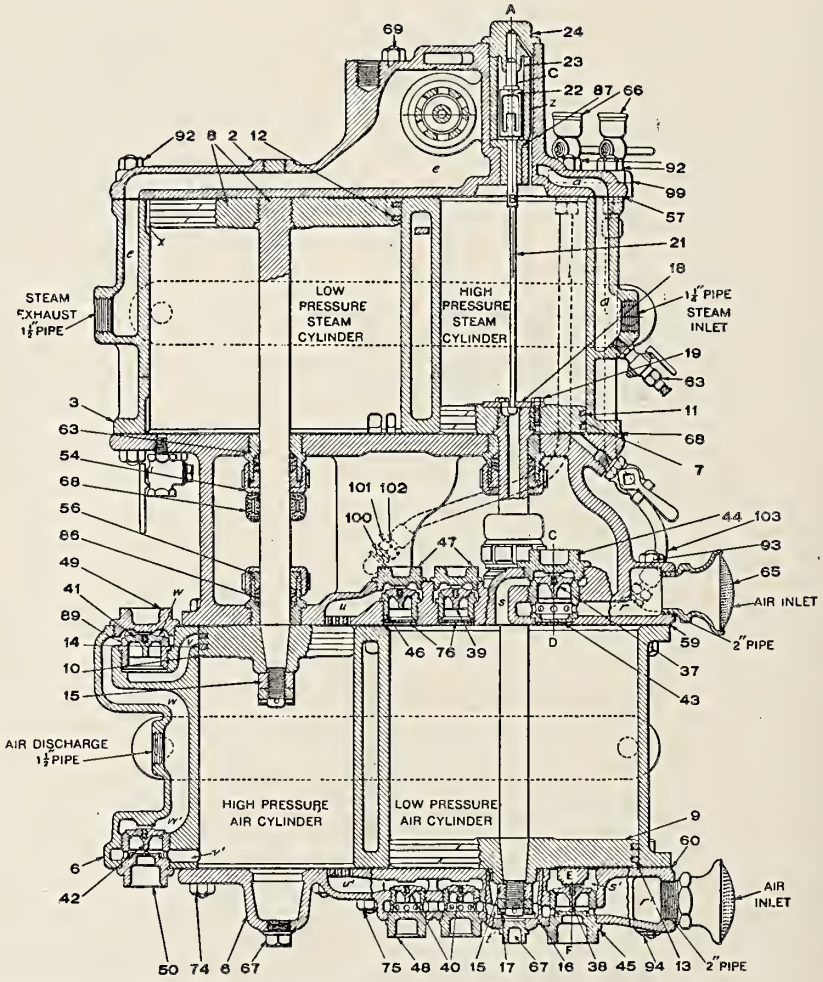

Fig. 1412—Westinghouse 8½-in. Cross Compound Air Compressor with Piston Valve.

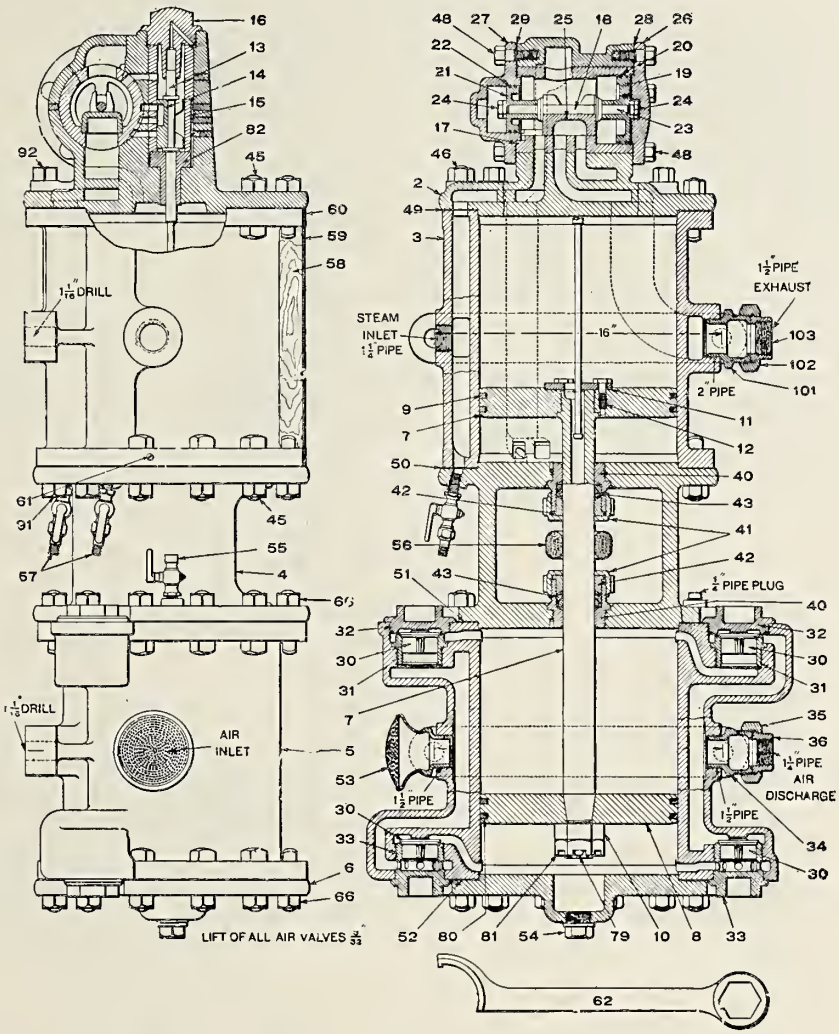

Fig. 1413—Westinghouse 11-in. Air Compressor.

Names of Parts of Air Compressor, Fig. 1413.

2 *Top Head*
3 *Steam Cylinder*
4 *Center Piece*
5 *Air Cylinder*
6 *Lower Head*
7 *Steam Piston and Rod*
8 *Air Piston*
9 *Piston Ring*
10 *Piston Rod Nut*
11 *Reversing Valve Plate*
12 *Reversing Valve Plate Bolt*
13 *Reversing Valve Rod*
14 *Reversing Valve*
15 *Reversing Valve Chamber Bush*
16 *Reversing Valve Chamber Cap*
17 *Main Valve Bush*
18 *Main Valve Pistons and Stem*
19 *Large Main Valve Piston*
20 *Large Main Valve Piston Ring*
21 *Small Main Valve Piston*
22 *Small Main Valve Piston Ring*
23 *Main Valve Stem*
24 *Main Valve Stem Nut*
25 *Main Slide Valve*
26 *Right Main Valve Cylinder Head*
27 *Left Main Valve Cylinder Head*
28 *Right Main Valve Head Gasket*
29 *Left Main Valve Head Gasket*
30 *Air Valve*
31 *Air Valve Seat*
32 *Air Valve Cap*
33 *Air Valve Cage*
34 *Air Discharge Stud*
35 *Air Discharge Union Nut*
36 *Air Discharge Union Swivel*
40 *Stuffing Box*
41 *Stuffing Box Nut*
42 *Stuffing Box Gland*
43 *Piston Rod Packing*
45 *Tee Head Bolt*
46 *Long Tee Head Bolt*
48 *Main Valve Head Cap Screw*
49 *Upper Steam Cylinder Gasket*
50 *Lower Steam Cylinder Gasket*
51 *Upper Air Cylinder Gasket*
52 *Lower Air Cylinder Gasket*
53 *Air Strainer*
54 *Cylinder Head Plug*
55 *Oil Cock*
56 *Piston Rod Swab*
57 *Drain Cock*
58 *Steam Cylinder Lagging*
59 *Steam Cylinder Jacket*
60 *Steam Cylinder Jacket Band*
61 *Jacket Band Screw*
62 *Packing Nut Wrench*
66 *Tee Head Bolt and Nut*
79 *Piston Rod Cotter*
81 *Piston Rod Jam Nut*
82 *Reversing Valve Rod Bush*
91 *Short Cap Screw*
92 *Long Cap Screw*
101 *Exhaust Stud*
102 *Exhaust Union Nut*
103 *Exhaust Union Swivel*

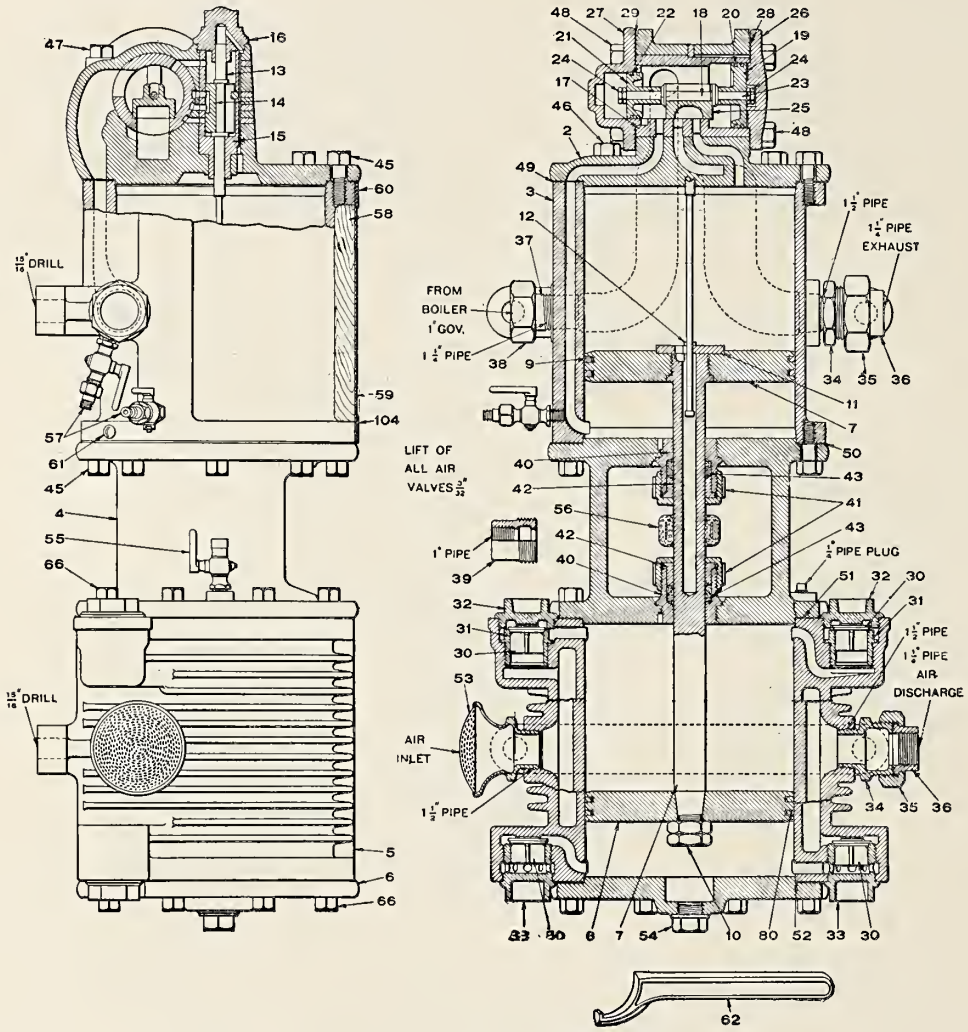

Fig. 1414—Westinghouse 9½-in. Air Compressor.

Names of Parts of Air Compressor, Fig. 1414.

2 *Top Head*
3 *Steam Cylinder*
4 *Center Piece*
5 *Air Cylinder*
6 *Lower Head*
7 *Steam Piston and Rod*
8 *Air Piston*
9 *Piston Ring*
10 *Piston Rod Nut*
11 *Reversing Valve Plate*
12 *Reversing Valve Plate Bolt*
13 *Reversing Valve Rod*
14 *Reversing Valve*
15 *Reversing Valve Chamber Bush*
16 *Reversing Valve Chamber Cap*
17 *Main Valve Bush*
18 *Main Valve Piston and Stem*
19 *Large Main Valve Piston*
20 *Large Main Valve Piston Ring*
21 *Small Main Valve Piston*
22 *Small Main Valve Piston Ring*
23 *Main Valve Stem*
24 *Main Valve Stem Nut*
25 *Main Slide Valve*
26 *Right Main Valve Cylinder Head*
27 *Left Main Valve Cylinder Head*
28 *Right Main Valve Head Gasket*
29 *Left Main Valve Head Gasket*
30 *Air Valve*
31 *Air Valve Seat*
32 *Air Valve Cap*
33 *Air Valve Cage*
34 *Union Stud*
35 *Union Nut*
36 *Union Swivel*
37 *Steam Pipe Stud*
38 *Governor Union Nut*
39 *Steam Pipe Sleeve*
40 *Stuffing Box*
41 *Stuffing Box Nut*
42 *Stuffing Box Gland*
43 *Piston Rod Packing*
45 *Cap Screw*
46 *Cap Screw*
47 *Cap Screw*
48 *Main Valve Head Cap Screw*
49 *Upper Steam Cylinder Gasket*
50 *Lower Steam Cylinder Gasket*
51 *Upper Air Cylinder Gasket*
52 *Lower Air Cylinder Gasket*
53 *Air Strainer*
54 *Cylinder Head Plug*
55 *Oil Cock*
56 *Piston Rod Swab*
57 *Drain Cock*
58 *Steam Cylinder Lagging*
59 *Steam Cylinder Jacket*
60 *Upper Steam Cylinder Jacket Band*
61 *Jacket Band Screw*
62 *Packing Nut Wrench*
66 *Cap Screw*
80 *Air Piston Ring*
104 *Lower Steam Cylinder Jacket Band*

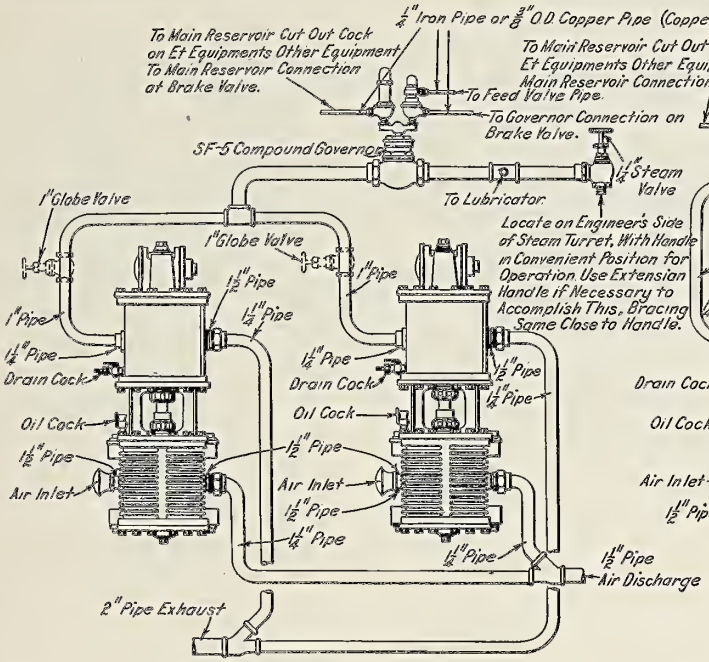

Fig. 1415—Piping Arrangement for Two Air Compressors.

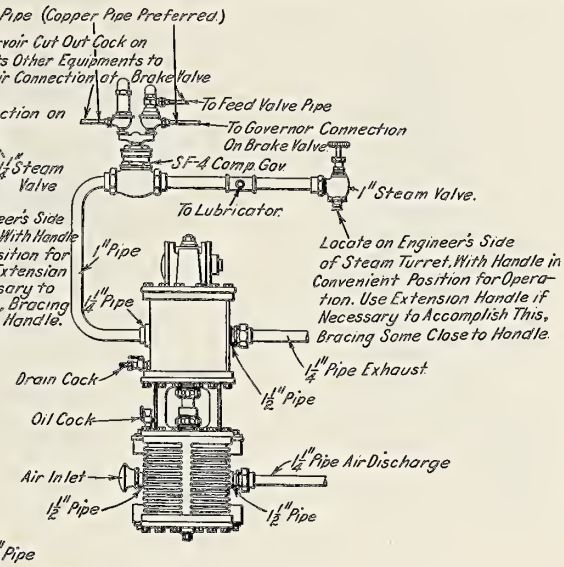

Fig. 1416—Piping Arrangement for One Air Compressor.

Fig. 1417—Main Reservoir.

Fig. 1418—Air Compressor Lubricator.

Names of Parts of Fig. 1419.

2	*Hand Wheel*	8	*Valve Body*
3	*Valve Stem*	9	*Union Swivel*
4	*Packing Nut*	10	*Valve Stud*
5	*Packing Gland*	11	*Hand Wheel Nut*
6	*Neck Piece*	14	*Steam Pipe Swivel*
7	*Union Nut*		

Names of Parts of Fig. 1421.

2 *Oil Cup Base*
3 *Oil Cup Body*
4 *Oil Cup Cap*
5 *Oil Cup Cap Pin*
6 *Cap Hinge Chain*
7 *Feed Spindle*
8 *Feed Spring*

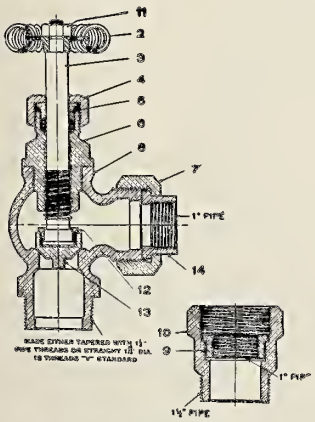

Fig. 1419—Steam Valve for Westinghouse Air Compressor.

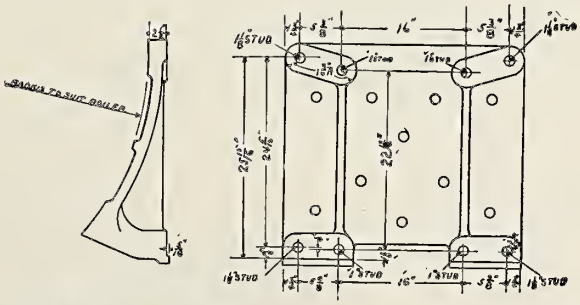

Fig. 1420—Bracket for 11-in. Standard and 8½-in. Cross-Compound Air Compressors.

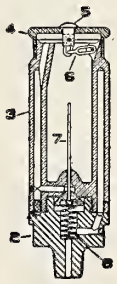

Fig. 1421—Westinghouse Automatic Air Cylinder Oil Cup.

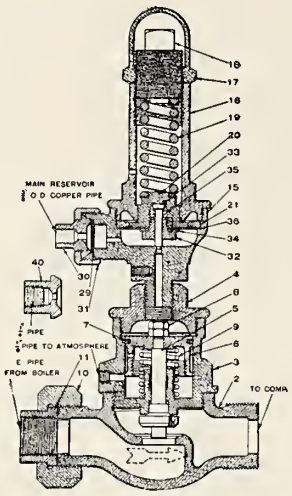

Fig. 1422—Single 1-in. Compressor Governor, S-4.

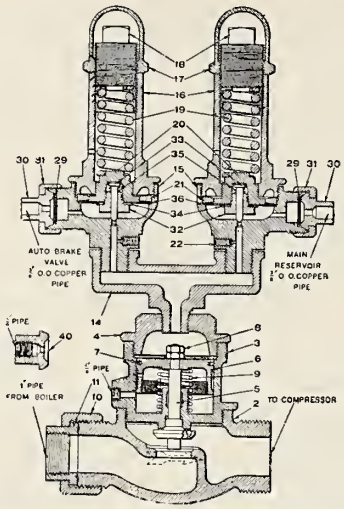

Fig. 1423—Duplex Compressor Governor, SD-4

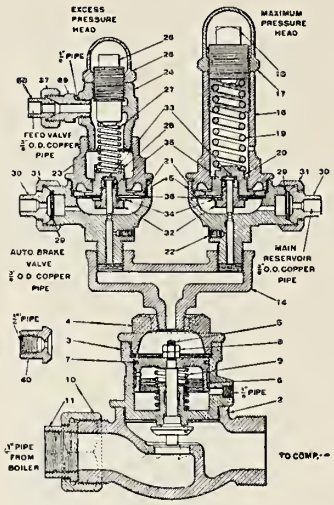

Fig. 1424—Duplex Compressor Governor, SF-4.

Names of Parts of Fig. 1422.

2 *Steam Valve Body*
3 *Cylinder Body*
4 *Cylinder Cap*
5 *Steam Valve*
6 *Piston*
7 *Piston Ring*
8 *Piston Nut*
9 *Piston Spring*
10 *Union Nut*
11 *Union Swivel*
15 *Diaphragm Body*
16 *Spring Box*
17 *Check Nut*
18 *Regulating Nut*
19 *Regulating Spring*
20 *Diaphragm*
21 *Diaphragm Ring*
29 *Strainer*
30 *Union Swivel*
31 *Union Nut*
32 *Diaphragm Nut*
33 *Diaphragm Valve*
34 *Diaphragm Washer*
35 *Diaphragm Valve Spring*
36 *Diaphragm*
40 *Union Swivel*

Names of Parts of Fig. 1423.

2 *Steam Valve Body*
3 *Cylinder Body*
4 *Cylinder Cap*
5 *Steam Valve*
6 *Piston*
7 *Piston Ring*
8 *Piston Nut*
9 *Piston Spring*
10 *Union Nut*
11 *Union Swivel*
14 *Siamese Fitting*
15 *Diaphragm Body*
16 *Spring Box*
17 *Check Nut*
18 *Regulating Nut*
19 *Regulating Spring*
20 *Diaphragm*
21 *Diaphragm Ring*
22 *Vent Port Screw*
29 *Strainer*
30 *Union Swivel*
31 *Union Nut*
32 *Diaphragm Nut*
33 *Diaphragm Valve*
34 *Diaphragm Washer*
35 *Diaphragm Spring*
36 *Diaphragm*
40 *Union Swivel*

Names of Parts of Fig. 1424.

2 *Steam Valve Body*
3 *Cylinder Body*
4 *Cylinder Cap*
5 *Steam Valve*
6 *Piston*
7 *Piston Ring*
8 *Piston Nut*
9 *Piston Spring*
10 *Union Nut*
11 *Union Swivel*
14 *Siamese Fitting*
15 *Diaphragm Body*
16 *Spring Box for Maximum Pressure Head*
17 *Check Nut for Maximum Pressure Head*
18 *Regulating Nut for Maximum Pressure Head*
19 *Regulating Spring for Maximum Pressure Head*
20 *Diaphragm for Maximum Pressure Head*
21 *Diaphragm Ring*
22 *Vent Port Screw*
23 *Spring Box for Excess Pressure Head*
24 *Spring Box Extension for Excess Pressure Head*
25 *Check Nut for Excess Pressure Head*
26 *Regulating Nut for Excess Pressure Head*
27 *Regulating Spring for Excess Pressure Head*
28 *Diaphragm for Excess Pressure Head*
29 *Strainer*
30 *Union Swivel*
31 *Union Nut*
32 *Diaphragm Nut*
33 *Diaphragm Valve*
34 *Diaphragm Washer*
35 *Diaphragm Valve Spring*
36 *Diaphragm*
37 *Union Nut*
38 *Union Swivel*
39 *Union Stud*
40 *Union Swivel*

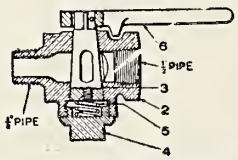

Fig. 1425—Main Reservoir Drain Cock.

Names of Parts of Fig. 1425.

2 *Body*
3 *Key*
4 *Cap*
5 *Spring*
6 *Handle*

Fig. 1426—Feed Valve Pipe Bracket Gasket.

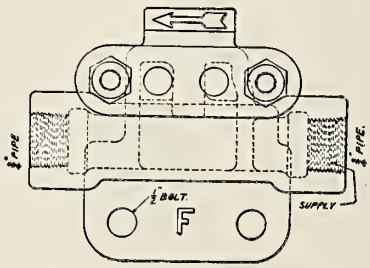

Fig. 1427—Feed Valve Pipe Bracket, Type F.

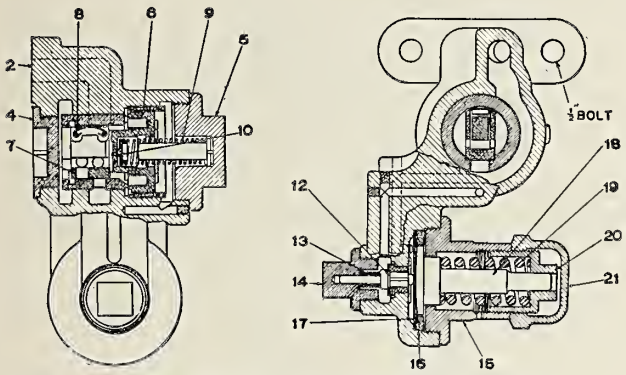

Fig. 1428—Single Pressure Feed Valve, C-6.

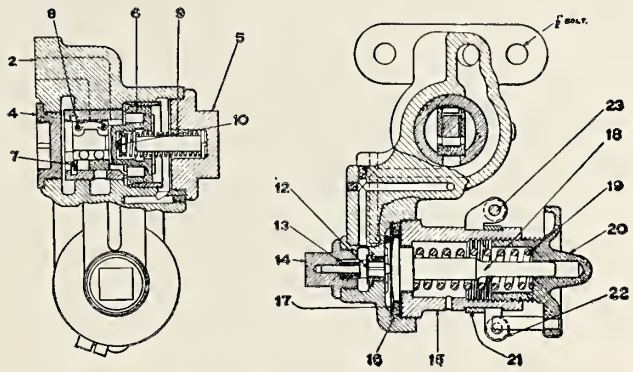

Fig. 1429—Double Pressure Feed Valve, B-6.

Names of Parts of Fig. 1428.

2 *Valve Body*
4 *Flush Nut*
5 *Cap Nut*
6 *Piston*
7 *Supply Valve*
8 *Supply Valve Spring*
9 *Piston Spring*
10 *Piston Spring Tip*
12 *Regulating Valve*
13 *Regulating Valve Spring*
14 *Regulating Valve Cap Nut*
15 *Spring Box*
16 *Diaphragm Ring*
17 *Diaphragm*
18 *Diaphragm Spindle*
19 *Regulating Spring*
20 *Regulating Nut*
21 *Check Nut*

Names of Parts of Fig. 1429.

2 *Valve Body*
4 *Flush Nut*
5 *Cap Nut*
6 *Piston*
7 *Supply Valve*
8 *Leather Shaft Washer*
9 *Piston Spring*
10 *Piston Spring Tip*
12 *Regulating Valve*
13 *Regulating Valve Spring*
14 *Regulating Valve Cap Nut*
15 *Spring Box*
16 *Diaphragm Ring*
17 *Diaphragm*
18 *Diaphragm Spindle*
19 *Regulating Spring*
20 *Regulating Hand Wheel*
21 *Inner Hand Wheel Stop*
22 *Outer Hand Wheel Stop*
23 *Stop Screw*

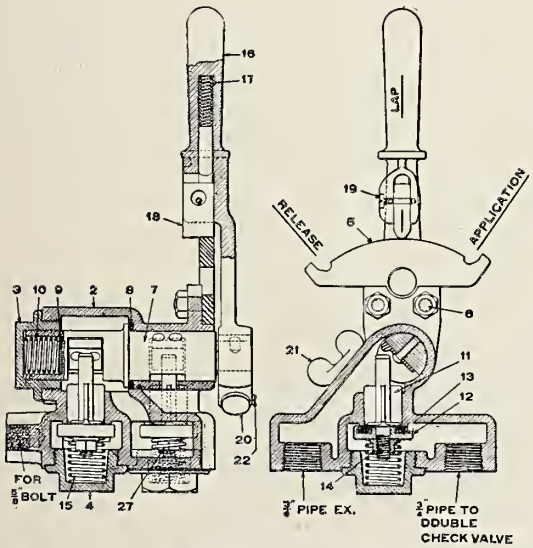

Fig. 1430—Straight Air Engineer's ¾-in. Brake Valve.

Names of Parts of Fig. 1430.

2 *Body*
3 *Shaft Cap Nut*
4 *Valve Cap Nut*
5 *Quadrant*
6 *Quadrant Bolt and Nut*
7 *Shaft, complete*
8 *Leather Shaft Washer*
9 *Shaft Spring Washer*
10 *Shaft Spring Valve*
11 *Valve Stem*
12 *Valve*
13 *Valve Leather*
14 *Valve Nut*
15 *Valve Spring*
16 *Brass Handle*
17 *Latch Spring*
18 *Latch*
19 *Latch Screw*
20 *Clamp Bolt*
21 *Thumb Nut*
22 *Pin*
27 *Valve Spring*

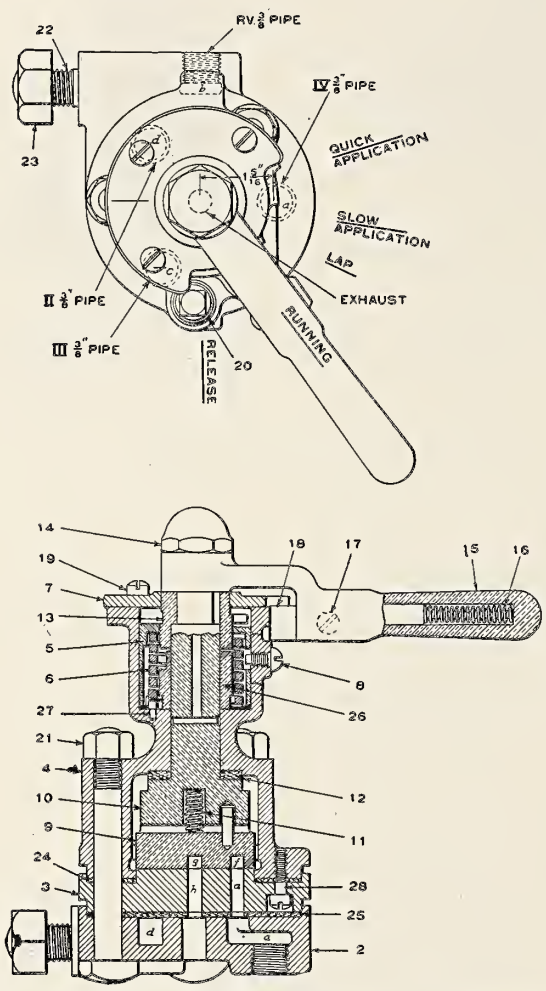

Fig. 1431—Westinghouse S-6 Independent Engineer's Brake Valve.

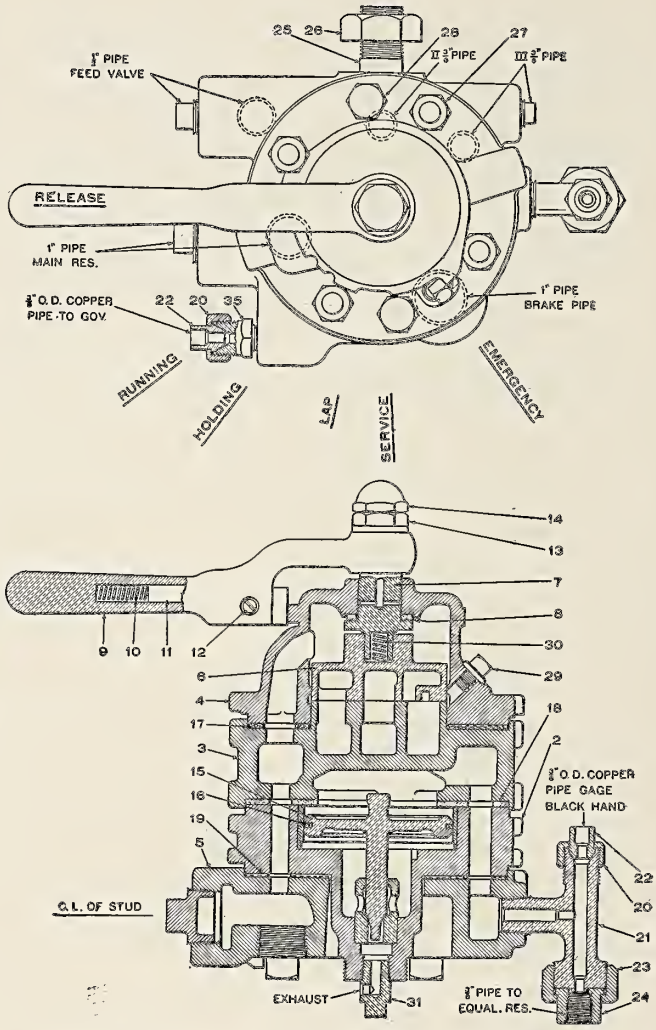

Fig. 1432—Westinghouse H-6 Automatic Engineer's Brake Valve.

Names of Parts of Fig. 1431.

2	*Pipe Bracket*	12	*Key Washer*	22	*Holding Stud*
3	*Rotary Valve Seat*	13	*Upper Clutch*	23	*Holding Nut*
4	*Body*	14	*Handle Nut*	24	*Upper Gasket*
5	*Return Spring Casing*	15	*Brass Handle*	25	*Lower Gasket*
6	*Return Spring*	16	*Latch Spring*	26	*Lower Clutch*
7	*Cover*	17	*Latch Screw*	27	*Return Spring Stop*
8	*Screw for Return Spring Casing*	18	*Latch*	28	*Fillister Head Screw*
9	*Rotary Valve*	19	*Cover Screw*	202	*Union Stud*
10	*Rotary Valve Key*	20	*Oil Plug*	203	*Union Nut*
11	*Rotary Valve Spring*	21	*Bolt and Nut*	204	*Union Swivel*

Names of Parts of Fig. 1432.

2	*Bottom Case*	13	*Handle Nut*	24	*Union Swivel*
3	*Rotary Valve Seat*	14	*Handle Lock Nut*	25	*Holding Stud*
4	*Top Case*	15	*Equalizing Piston*	26	*Holding Nut*
5	*Pipe Bracket*	16	*Equalizing Piston Packing Ring*	27	*Bolt and Nut*
6	*Rotary Valve*	17	*Upper Gasket*	28	*Cap Screw*
7	*Rotary Valve Key*	18	*Middle Gasket*	29	*Oil Plug*
8	*Key Washer*	19	*Lower Gasket*	30	*Rotary Valve Spring*
9	*Handle*	20	*Union Nut*	31	*Union Nut*
10	*Latch Spring*	21	*Brake Valve Tee*	32	*Union Swivel*
11	*Latch*	22	*Union Swivel*	35	*Exhaust Fitting*
12	*Latch Screw*	23	*Union Nut*		

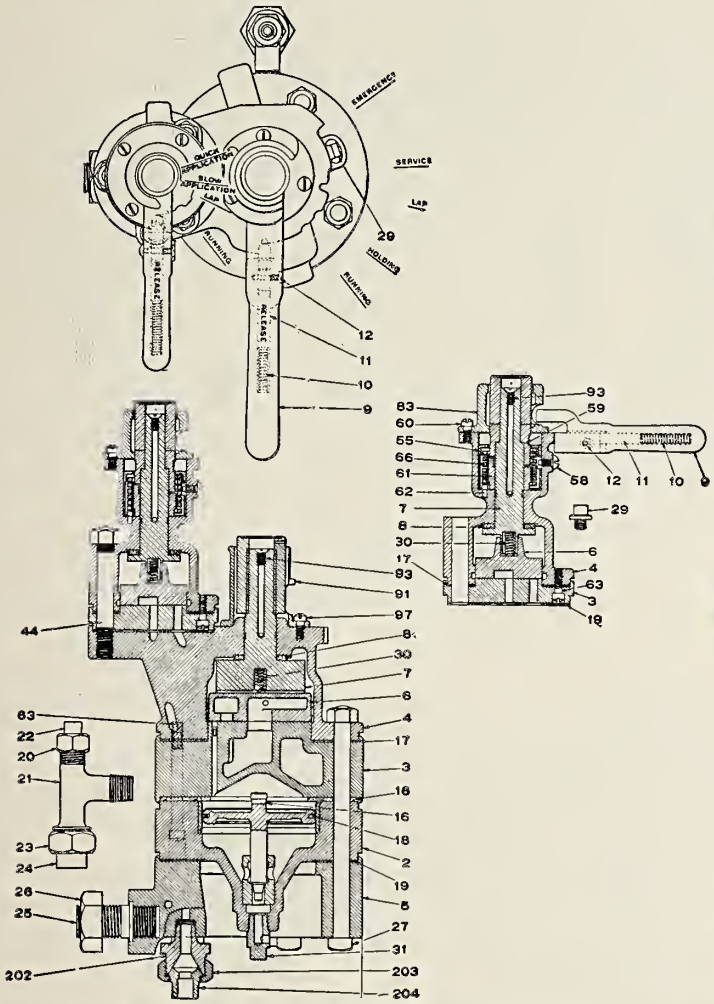

Fig. 1433—Westinghouse K-14-A Combined Automatic and Independent Engineer's Brake Valve.

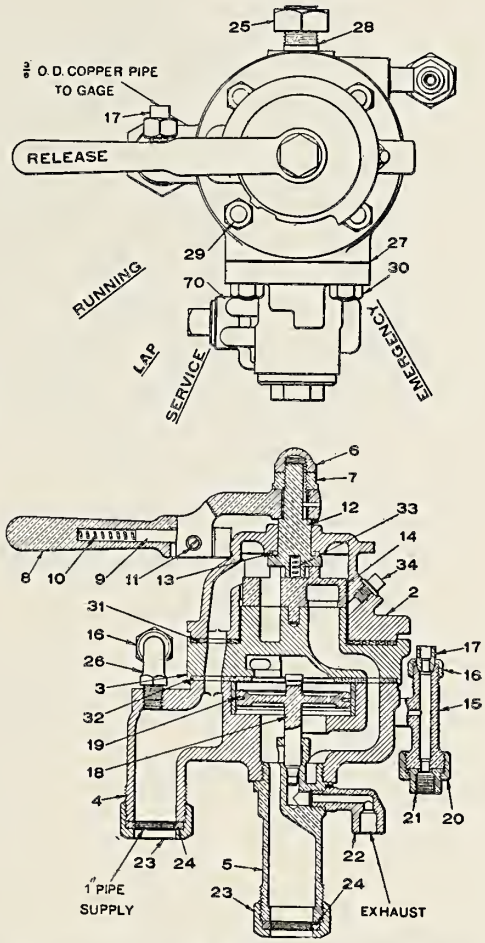

Fig. 1434—Westinghouse G-6 Engineer's Brake Valve.

Names of Parts of Fig. 1433.

2 *Bottom Case*
3 *Valve Seat*
4 *Body*
5 *Pipe Bracket*
6 *Rotary Valve*
7 *Rotary Valve Key*
8 *Key Washer*
9 *Brass Handle*
10 *Latch Spring*
11 *Latch*
12 *Latch Screw*
15 *Equalizing Piston*
16 *Piston Ring*
17 *Upper Gasket*
18 *Middle Gasket*
19 *Lower Gasket*
20 *Gage and Governor Union Nut*
21 *Gage and Equalizing Reservoir Tee*
22 *Gage and Governor Union Swivel*
23 *Union Nut*
24 *Union Swivel*
25 *Holding Stud*
26 *Holding Nut*
27 *Bolt and Nut*
29 *Oil Plug*
30 *Rotary Valve Spring*
31 *Exhaust Fitting*
44 *Stud and Nut*
55 *Return Spring Casing*
56 *Return Spring*
58 *Screw for Return Spring Casing*
59 *Upper Clutch*
60 *Cover Screw*
61 *Lower Clutch*
62 *Return Spring Stop*
63 *Fillister Head Screw*
91 *Handle Guard*
93 *Oil Screw*
97 *Handle Guard Screw*
202 *Union Stud*
203 *Union Nut*
204 *Union Swivel*

Names of Parts of Fig. 1434.

2 *Body*
3 *Rotary Valve Seat*
4 *Bottom Case*
5 *Bottom Cap*
6 *Handle Lock Nut*
7 *Handle Nut*
8 *Brass Handle*
9 *Latch*
10 *Latch Spring*
11 *Latch Screw*
12 *Rotary Valve Key*
13 *Key Washer*
14 *Rotary Valve*
15 *Gage and Equalizing Reservoir Tee*
16 *Gage and Governor Union Nut*
17 *Gage and Governor Union Swivel*
18 *Equalizing Piston*
19 *Piston Ring*
20 *Union Nut*
21 *Union Swivel*
22 *Exhaust Fitting*
23 *Union Nut*
24 *Union Swivel*
25 *Holding Nut*
26 *Gage Pipe Ell*
27 *Feed Valve Gasket*
28 *Holding Stud*
29 *Bolt and Nut*
30 *Stud and Nut*
31 *Upper Gasket*
32 *Lower Gasket*
33 *Rotary Valve Spring*
34 *Oil Plug*

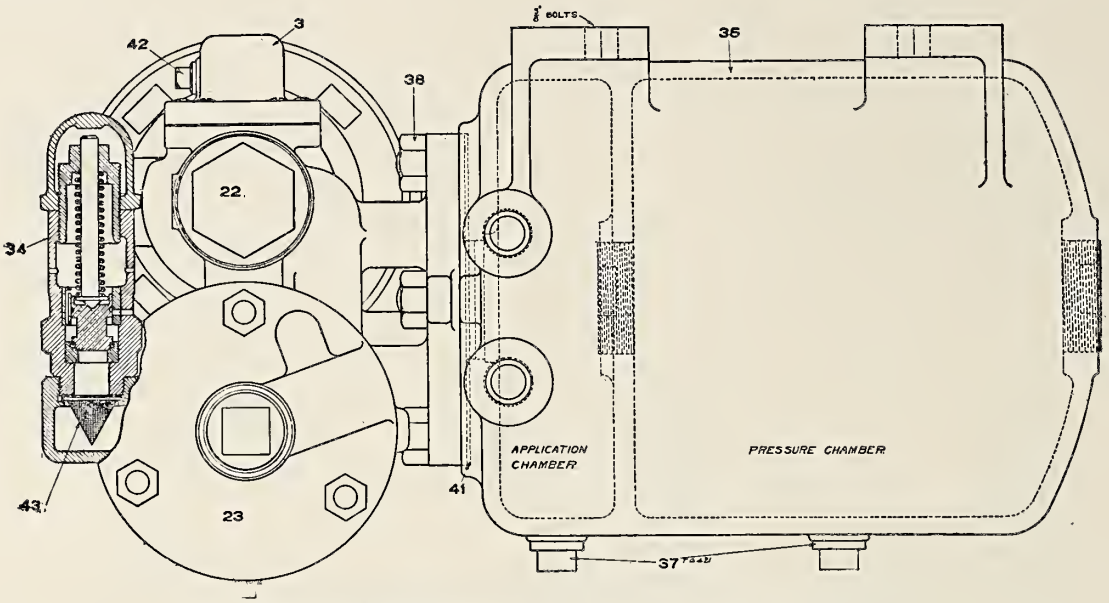

Fig. 1435—Distributing Valve and Double Chamber Reservoir.

Names of Parts of Figs. 1435-1436.

2 *Body*
3 *Application Valve Cover*
4 *Cover Screw*
5 *Application Valve*
6 *Application Valve Spring*
7 *Application Cylinder Cover*
8 *Bolt and Nut*
9 *Cylinder Cover Gasket*
10 *Application Piston*
11 *Piston Follower*
12 *Packing Expander*
13 *Packing Leather*
14 *Application Piston Nut*
15 *Application Piston Ring*
16 *Exhaust Valve*
17 *Exhaust Valve Spring*
18 *Application Valve Pin*
19 *Application Graduating Stem*
20 *Application Graduating Spring*
21 *Application Graduating Stem Nut*
22 *Upper Cap Nut*
23 *Plain Cylinder Cap*
24 *Bolt and Nut*
25 *Cylinder Cap Gasket*
26 *Equalizing Piston*
27 *Equalizing Piston Ring*
28 *Graduating Valve*
29 *Graduating Valve Spring*
31 *Equalizing Valve*
32 *Equalizing Valve Spring*
33 *Lower Cap Nut*
34 *E-6 Safety Valve*
35 *Double Chamber Reservoir*
36 *Reservoir Stud and Nut*
37 *Reservoir Drain Plug*
39 *Application Valve Cover Gasket*
40 *Application Piston Cotter*
41 *Distributing Valve Gasket*
42 *Oil Plug*
43 *Strainer*
44 *Graduating Sleeve*
45 *Cap Nut for Plain Cylinder Cap*
46 *Graduating Spring for Equalizing Piston*
202 *Union Stud*
203 *Union Nut*
204 *Union Swivel*

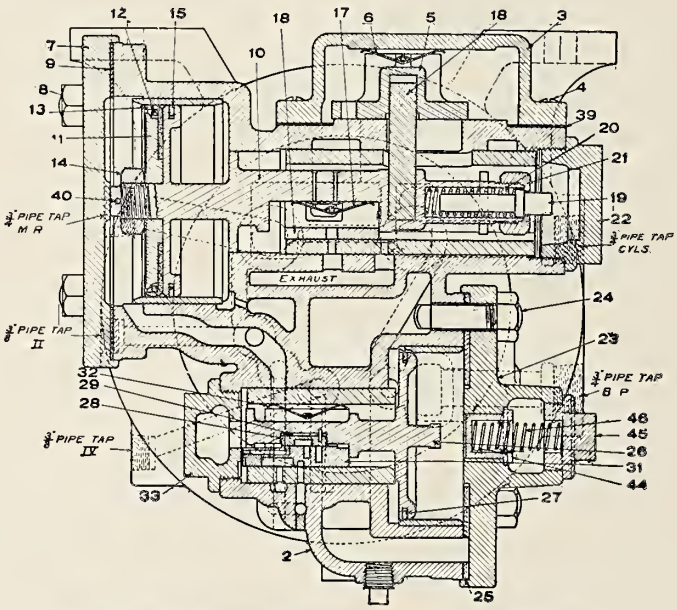

Fig. 1436—Section Through Distributing Valve.

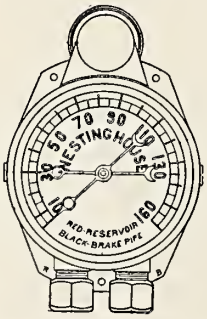

Fig. 1437—Illuminated Duplex Air Gage.

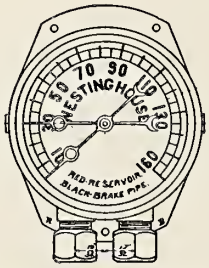

Fig. 1438—Duplex Air Gage.

Fig. 1439—Duplex Air Gage.

Fig. 1440—Single Pointer Air Gage.

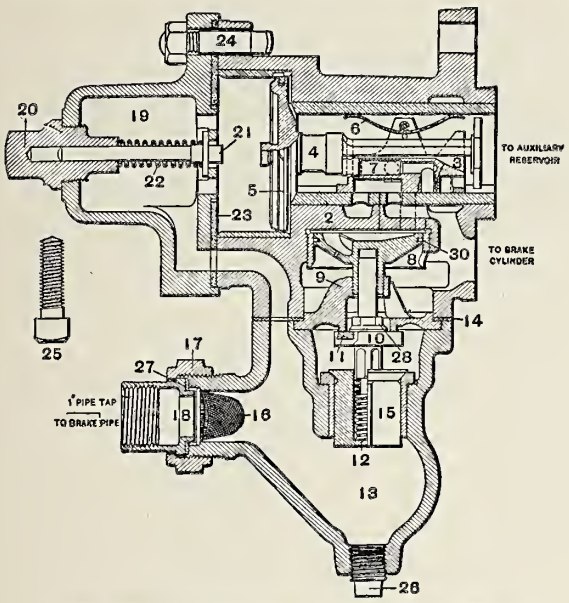

Fig. 1441—Quick-Action Triple Valve, Type P.

Names of Parts of Fig. 1441.

2 *Body*
3 *Slide Valve*
4 *Main Piston*
5 *Main Piston Ring*
6 *Slide Valve Spring*
7 *Graduating Valve*
8 *Emergency Piston*
9 *Emergency Valve Seat*
10 *Emergency Valve*
11 *Rubber Seat*
12 *Check Valve Spring*
13 *Check Valve Case*
14 *Check Valve Case Gasket*
15 *Check Valve*
16 *Strainer*
17 *Union Nut*
18 *Union Swivel*
19 *Cylinder Cap*
20 *Graduating Stem Nut*
21 *Graduating Stem*
22 *Graduating Spring*
23 *Cylinder Cap Gasket*
24 *Bolt and Nut*
25 *Cap Screw*
27 *Union Gasket*
28 *Emergency Valve Nut*
30 *Emergency Piston Ring*

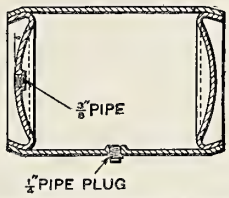

Fig. 1442—Equalizing Reservoir.

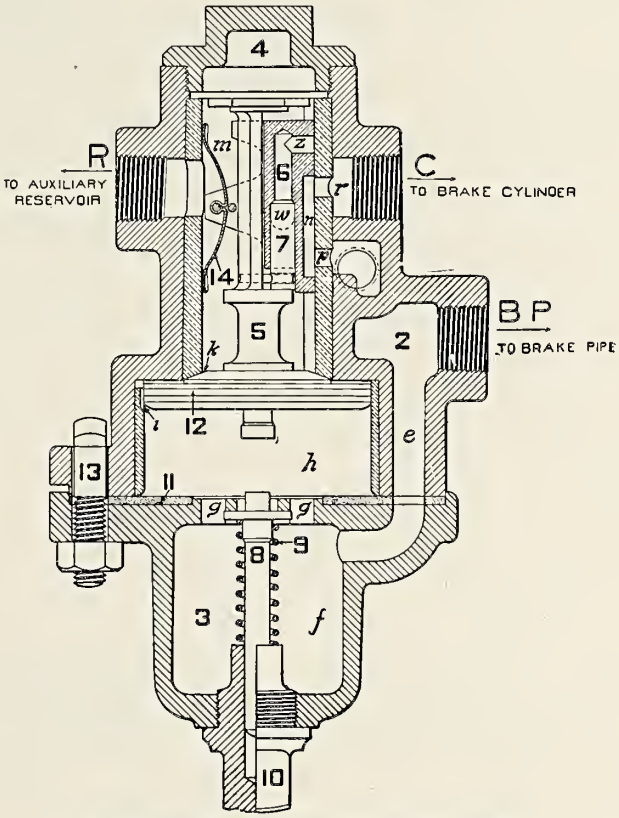

Fig. 1443—Plain Triple Valve, Type F.

Names of Parts of Fig. 1443.

2 *Body, bushed*
3 *Cylinder Cap*
4 *Cap Nut*
5 *Piston*
6 *Slide Valve*
7 *Graduating Valve*
8 *Graduating Stem*
9 *Graduating Spring*
10 *Graduating Stem Nut*
11 *Cylinder Cap Gasket*
12 *Piston Ring*
13 *Bolt and Nut*
14 *Slide Valve Spring*

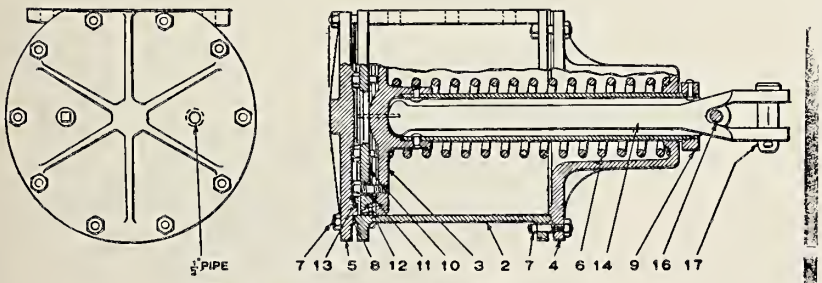

Fig. 1444—Driver Brake Cylinder.

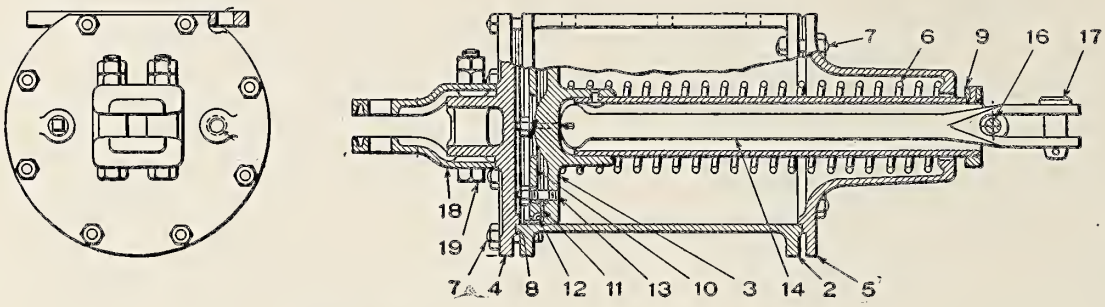

Fig. 1445—Engine Truck Brake Cylinder.

Names of Parts of Fig. 1445.

2 *Cylinder Body*
3 *Piston and Rod*
4 *Pressure Head*
5 *Non-Pressure Head*
6 *Release Spring*
7 *Cylinder Head Bolt and Nut*
8 *Cylinder Gasket*
9 *Push Rod Holder*
10 *Follower*
11 *Packing Leather*
12 *Packing Expander*
13 *Follower Stud and Nut*
14 *Push Rod*
16 *Push Rod Holder Pin*
17 *Push Rod Pin*
18 *Detachable Lever Bracket*
19 *Lever Bracket Bolt and Nuts*

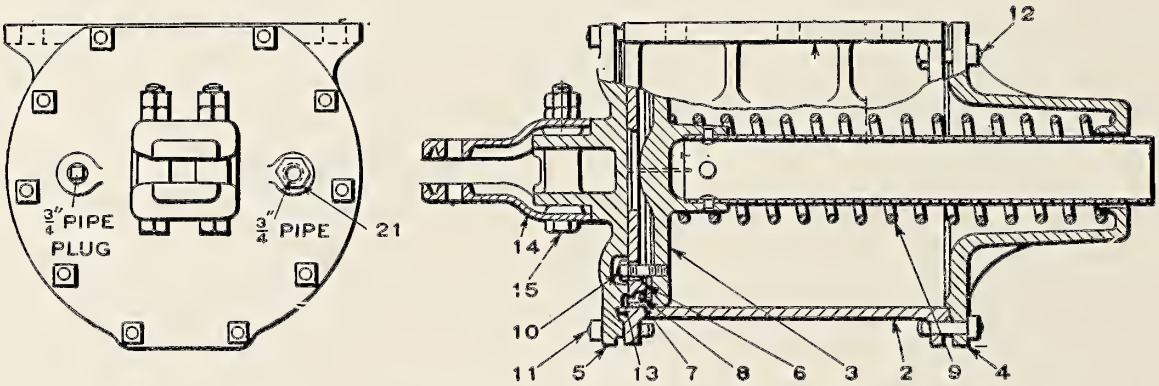

Fig. 1446—Tender Brake Cylinder.

Names of Parts of Fig. 1446.

2 *Cylinder Body*
3 *Piston and Rod*
4 *Non-Pressure Head*
5 *Pressure Head*
6 *Follower*
7 *Packing Leather*
8 *Packing Expander*
9 *Release Spring*
10 *Follower Stud and Nut*
11 *Pressure Head Bolt and Nut*
12 *Non-Pressure Head Bolt and Nut*
13 *Cylinder Gasket*
14 *Lever Bracket*
15 *Lever Bracket Bolt and Nuts*
21 *Reducing Bush*

Names of Parts of Fig. 1447.

2 *Body*
3 *Cap*
4 *Union Nut*
5 *Union Gasket*
6 *Union Swivel*
7 *Piston Valve Body*
8 *Leather Seat*
9 *Spring*
10 *Equalizing Stem*
11 *Washer*
12 *Retaining Nut*

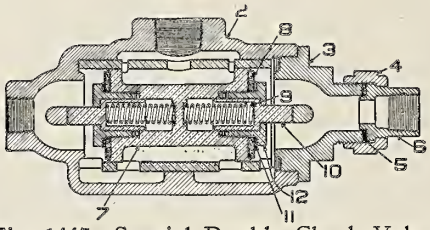

Fig. 1447—Special Double Check Valve.

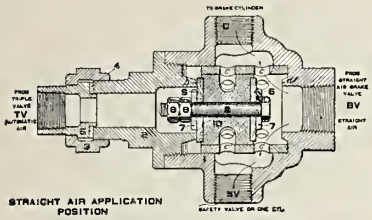

Fig. 1448—Double Check Valve.

Names of Parts of Fig. 1448.

1 *Body*
2 *Cap*
3 *Union Nut*
4 *Union Gasket*
5 *Union Swivel*
6 *Leather Seat*
7 *Washer*
8 *Nut*
9 *Bolt, Nuts and Cotter*
10 *Valve*

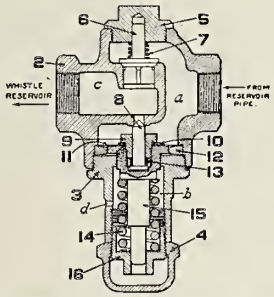

Fig. 1449—Duplex Check Valve.

Names of Parts of Fig. 1449.

2 *Valve Body*
3 *Spring Box*
4 *Check Nut*
5 *Cap Nut*
6 *Valve*
7 *Spring for Valve, Diaphragm*
8 *Diaphragm Valve*
9 *Diaphragm Nut*
10 *Diaphragm Washer*
11 *Diaphragm*
12 *Diaphragm Ring*
13 *Diaphragm Valve Spring*
14 *Regulating Spring*
15 *Diaphragm Spindle*
16 *Regulating Nut*

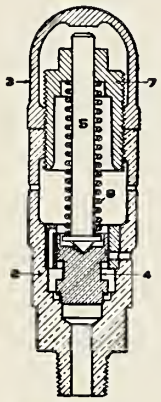

Fig. 1450—Safety Valve, Type E.

Names of Parts of Fig. 1450.

2 *Body*
3 *Cap Nut*
4 *Valve*
5 *Valve Stem*
6 *Spring*
7 *Regulating Nut*

Names of Parts of Fig. 1451.

2 *Body*
3 *Case*
4 *Weight*
5 *Handle*
6 *Cock Key*
7 *Cock Cap*
8 *Key Spring*

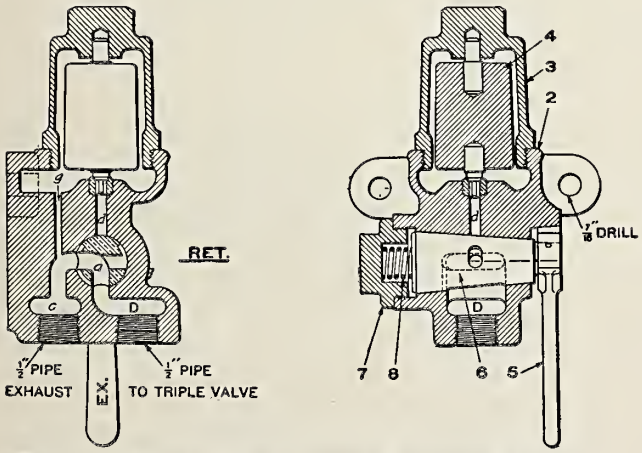

Fig. 1451—Weight Type Pressure Retaining Valves.

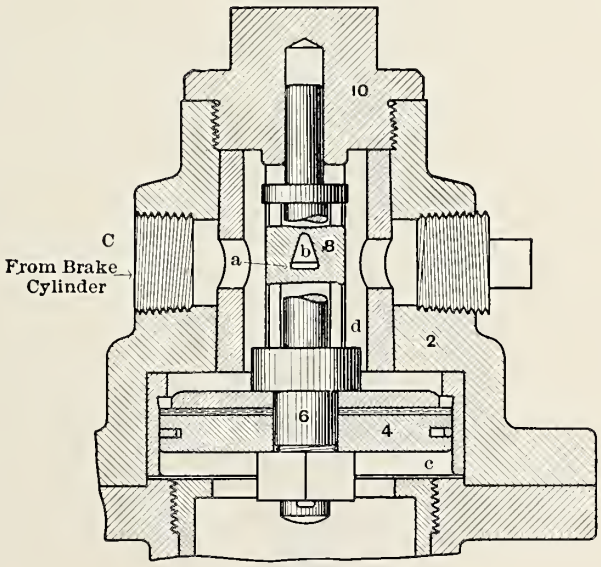

Service
Pressure Exceeding 60 Lbs. in Brake Cylinder

Fig. 1452—High-Speed Reducing Valve, Service Position.

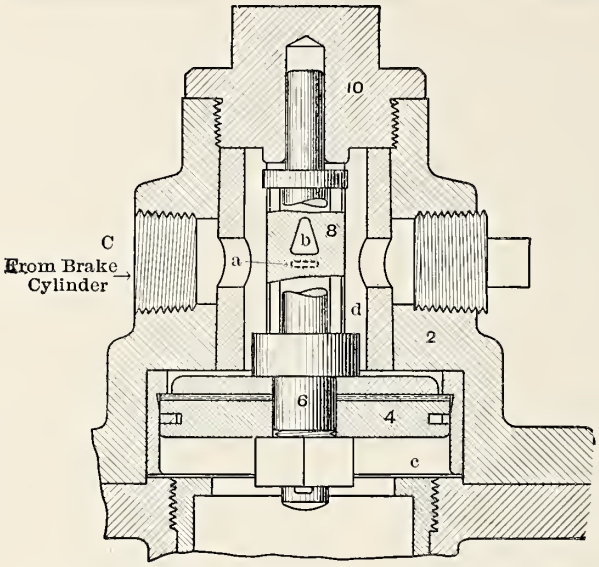

Release

Fig. 1453—High-Speed Reducing Valve, Release Position.

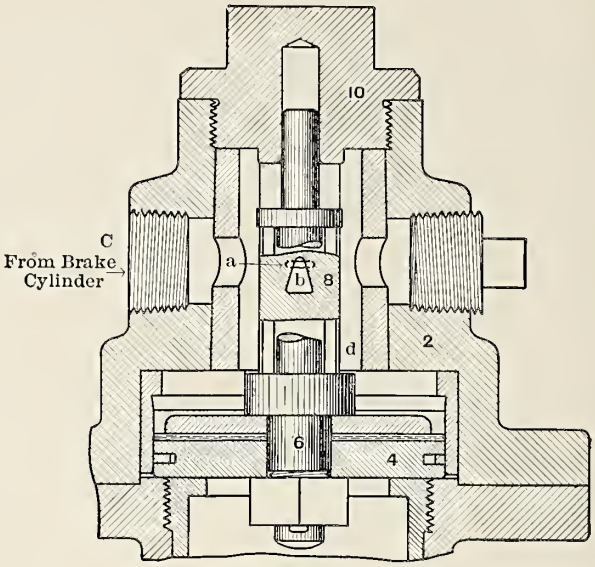

Emergency

Fig. 1454—High-Speed Reducing Valve, Emergency Position.

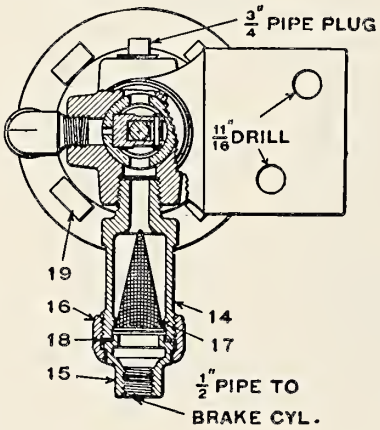

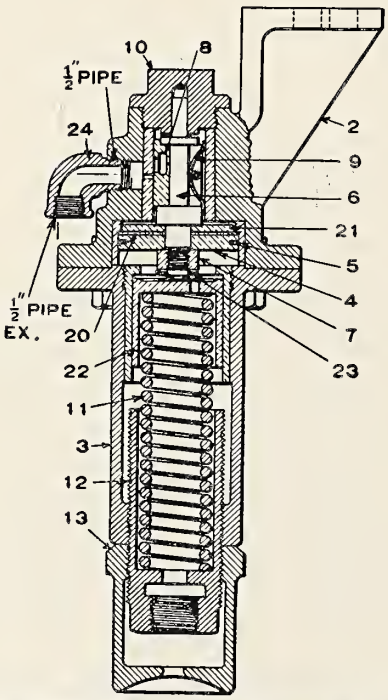

Fig. 1455—High-Speed Reducing Valve.

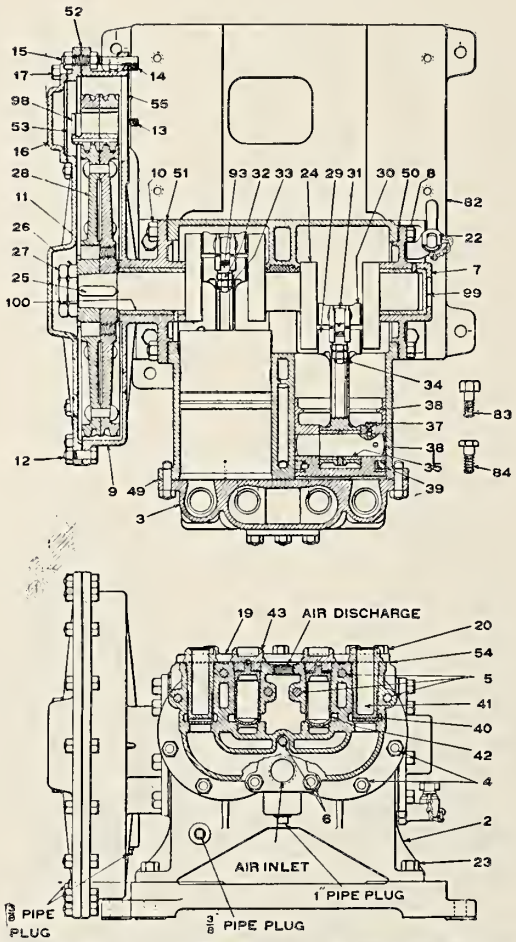

Fig. 1456—Motor-Driven Air Compressor, Compressor Portion.

Names of Parts of Fig. 1456.

2 *Cylinder and Crank Case*
3 *Cylinder Cover*
4 *Cylinder Cover Bolt and Nut*
5 *Cylinder Cover Bolt and Nut*
6 *Cylinder Cover Bolt and Nut*
7 *Front Crank Case Cover*
8 *Front Crank Case Cover Cap Screw*
9 *Gear Case*
10 *Gear Case Stud and Nut*
11 *Gear Case Cover*
12 *Gear Case Cover Bolt and Nut*
13 *Long Cap Screw for Gear Case and Motor*
14 *Short Cap Screw for Gear Case and Motor*
15 *Special Bolt with two Nuts*
16 *Gear Case Cover Cap*
17 *Cap Screw for Gear Case Cover Cap*
19 *Crank Case Top Cover*
20 *Short Cap Screw for Crank Case Top Cover*
21 *Long Cap Screw for Crank Case Top Cover*
22 *Crank Case Oil Fitting*
23 *Cap Screw for Securing Compressor to Bed Plate*
24 *Crank Shaft*
25 *Crank Shaft Key*
26 *Crank Shaft Nut*
27 *Crank Shaft Jam Nut*
28 *Gear*
29 *Connecting Rod*
30 *Connecting Rod Cap*
31 *Connecting Rod Eye Bolt*
32 *Nut for Eye Bolt*
33 *Jam Nut for Eye Bolt*
34 *Cotter for Eye Bolt*
35 *Connecting Rod Bush*
36 *Wrist Pin*
37 *Wrist Pin Set Screw*
38 *Piston*
39 *Piston Packing Ring*
40 *Inlet Valve*
41 *Inlet Valve Chamber Cap*
42 *Discharge Valve*
43 *Discharge Valve Chamber Cap*
49 *Cylinder Cover Gasket*
50 *Front Crank Case Cover Gasket*
51 *Gear Case and Crank Case Gasket*
52 *Gear Case Cover Gasket*
53 *Gear Case Cover Cap Gasket*
54 *Crank Case Top Cover Gasket*
55 *Motor Gasket*
82 *Bed Plate*
83 *Cap Screw*
84 *Special Cap Screw for Securing Motor to Bed Plate*
85 *Suction Plate*
86 *Suction Plate Gasket*
87 *Bolt and Nut for Cylinder Cover*
93 *Washer for Eye Bolt*
97 *Pipe for Carrying Vent for Crank Case Cover to Bed Plate*
98 *Pinion for Motor Shaft*
99 *Shaft Bearing Bush (front end)*
100 *Shaft Bearing Bush (rear end)*

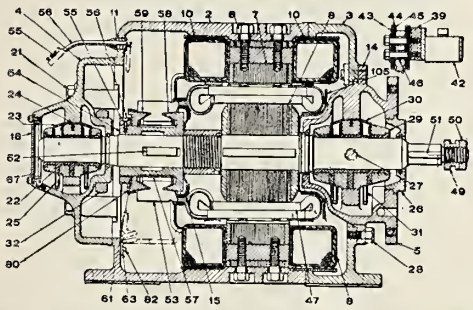

Fig. 1457—Motor-Driven Air Compressor, Motor Portion.

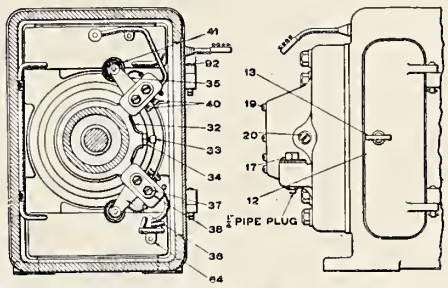

Fig. 1458—Motor-Driven Air Compressor, Motor End.

Names of Parts of Figs. 1457 and 1458.

2 *Field Yoke*
3 *End Bell*
4 *Front Bearing Housing*
5 *Rear Bearing Housing*
6 *Armature*
7 *Field Pole*
8 *Field Pole Screw*
9 *Field Coil*
10 *Field Coil Washer*
11 *Long Insulating Bushing for Leads*
12 *Commutator Door*
13 *Commutator Door Latch*
14 *Stud and Nut for Securing End Bell*
15 *Armature Coil Support*
17 *Oil Filling Elbow Cap Nut*
18 *Front Bearing Housing Dust Plate*
19 *Screw for Dust Plate*
20 *Front Bearing Housing Headless Screw*
21 *Cap Screw for Front Bearing Housing*
22 *Front Bearing*
23 *Cleat for Front Bearing*
24 *Cleat Screw*
25 *Front Bearing Oil Ring*
26 *Nut for Ring Bearing Housing*
27 *Rear Bearing Housing Headless Screw*
28 *Cap Screw for Rear Bearing Housing*
29 *Rear Bearing*
30 *Cleat for Rear Bearing*
31 *Rear Bearing Oil Ring*
32 *Rocker Arm*
33 *Set Screw for Rocker Arm*
34 *Jam Nut for Set Screw*
35 *Upper Carbon Holder*
36 *Lower Carbon Holder*
37 *Cap Screw for Carbon Holder*
38 *Washer for Carbon Holder Cap Screw*
39 *Double Nut for Carbon Holder*
40 *Screw for Carbon Holder Leads*
41 *Carbon Holder Spring*
42 *Carbon*
43 *Insulating Washer Fibre*
44 *Insulating Washer Fullerboard*
45 *Insulating Washer Mica*
46 *Insulating Tube for Rocker Arm*
47 *Armature Coil*
49 *Nut for Removing Pinion*
50 *Motor Shaft Jam Nut*
51 *Key for Pinion*
52 *Key for Commutator*
53 *Commutator*
54 *Commutator Bushing*
55 *Commutator Nut*
56 *Set Screw for Commutator Nut*
57 *Insulating Bush for Commutator*
58 *Inner Insulating "V" Ring for Commutator*
59 *Outer Insulating "V" Ring for Commutator*
60 *Taper Ring for Commutator*
61 *Washer for Commutator Nut*
62 *Screw for Cleats*
63 *Nut Lock for Cleat Screw*
64 *Cleat for Holding Leads*
65 *Connector for Leads*
66 *Carbon Holder Lead*
67 *Dust Plate Gasket*
92 *Hinge Pin for Commutator Door*
105 *Oil Deflector*

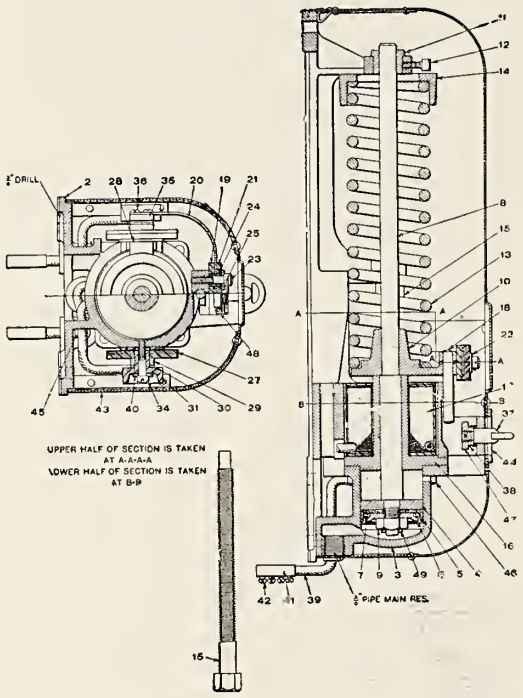

Fig. 1459—Electric Compressor Governor, Type G-I-D.

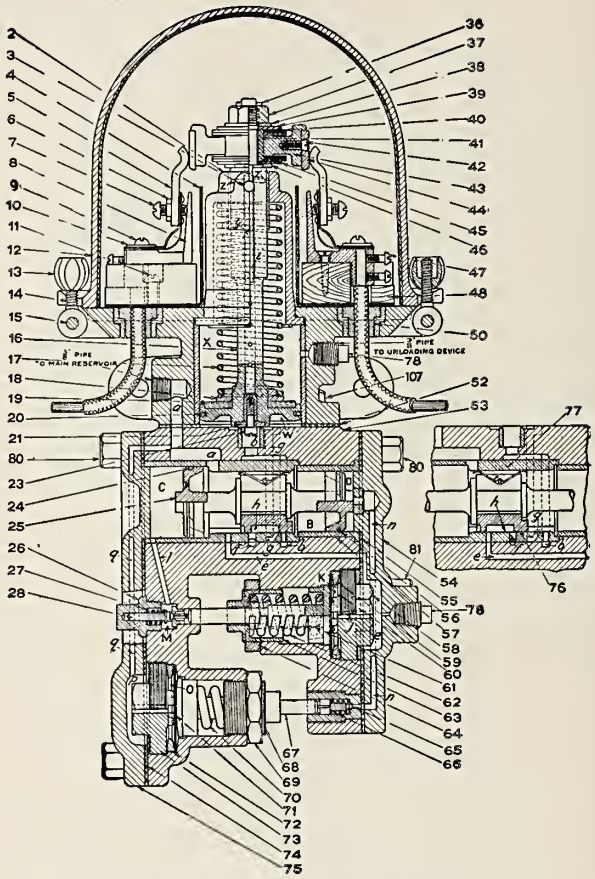

Fig. 1460—Electric Compressor Governor, Type J.

Names of Parts of Fig. 1460.

2 *Frame*
3 *Guide Pin*
4 *Finger Board Insulation*
5 *Finger*
6 *Adjusting Screw Jam Nut*
7 *Finger Adjusting Screw*
8 *Finger Base*
9 *Screw for securing Finger to Finger Base*
10 *Finger Clamp*
11 *Finger Board Screw*
12 *Switch Cover, complete*
13 *Eye Bolt Thumb Nut*
14 *Cover Eye Bolt*
15 *Eye Bolt Rivet*
16 *Switch Piston and Rod*
17 *Piston Spring*
18 *Piston Spring Seat*
19 *Piston Seat*
20 *Switch Piston Ring*
21 *Piston Washer*
23 *Piston Washer Screw*
24 *Large Ring for Double Piston*
25 *Double Piston with Rings*
26 *Regulating Valve Cap*
27 *Regulating Valve Spring*
28 *Regulating Valve for Cutting Out*
36 *Piston Rod Cotter*
37 *Piston Rod Nut*
38 *Piston Rod Brass Washer*
39 *Piston Rod Fibre Washer*
40 *Piston Rod Fibre Washer*
41 *Square Fibre Bush*
42 *Contact Screw*
43 *Switch Spider*
44 *Switch Spider Contact*
45 *Piston Rod Fibre Washer*
46 *Piston Rod Brass Washer*
47 *Lead Screw*
48 *Finger Board*
50 *Porcelain Bush for Leads*
52 *Frame Gasket*
53 *Valve Case*
54 *Cylinder Head and Diaphragm Cover*
55 *Gasket*
56 *Small Ring for Double Piston*
57 *Piston Bush*
58 *Diaphragm Cap Nut*
59 *Diaphragm Ring*
60 *Diaphragm*
61 *Diaphragm Spindle*
62 *Regulating Spring*
63 *Regulating Nut*
64 *Regulating Check Nut*
65 *Regulating Valve for Cutting In*
66 *Regulating Valve Spring*
67 *Diaphragm Spindle*
68 *Regulating Nut*
69 *Regulating Check Nut*
70 *Regulating Spring*
71 *Diaphragm*
72 *Diaphragm Ring*
73 *Diaphragm Cap Nut*
74 *Gasket*
75 *Cylinder Head and Diaphragm Cover*
76 *Slide Valve*
77 *Slide Valve Spring*
78 *Pipe Plug*
80 *Short Cap Screw for Cylinder Head*
81 *Long Cap Screw for Cylinder Head*
107 *Tee Head Bolt with Nut for securing Switch to Controlling Mechanism*

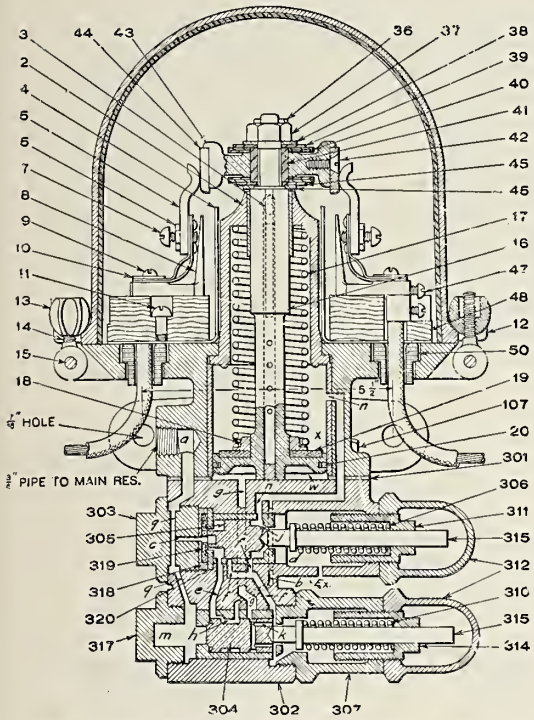

Fig. 1461—Electric Compressor Governor, Type S-6-B.

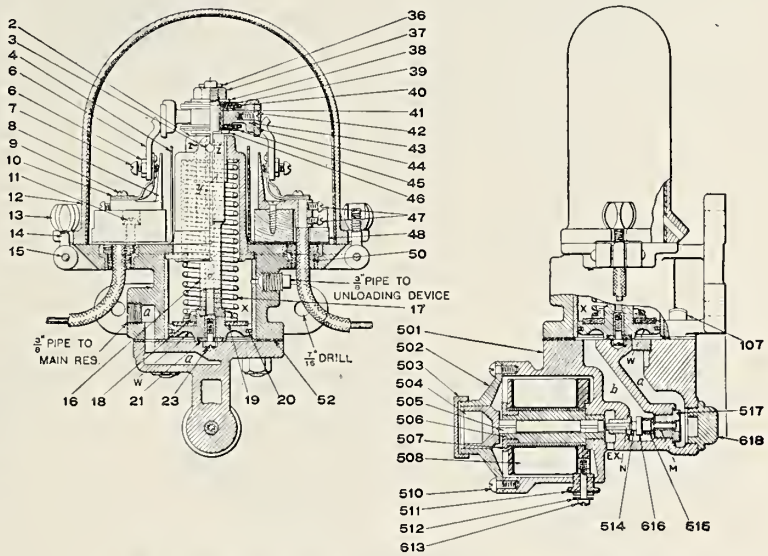

Fig. 1462—Electric-Pneumatic Compressor Switch, Type A-1.

Names of Parts of Fig. 1461.

2 *Frame*
3 *Guide Pin*
4 *Finger Board Insulation*
5 *Finger*
6 *Adjusting Screw Jam Nut*
7 *Finger Adjusting Screw*
8 *Finger Base*
9 *Screw for Securing Finger to Finger Base*
10 *Finger Clamp*
11 *Finger Board Screw*
12 *Switch Cover*
13 *Eye Bolt Thumb Nut*
14 *Cover Eye Bolt*
15 *Eye Bolt Rivet*
16 *Switch Piston and Rod*
17 *Piston Spring*
18 *Piston Spring Seat*
19 *Piston Seal*
20 *Switch Piston Ring*
36 *Piston Rod Cotter*
37 *Piston Rod Nut*
38 *Piston Rod Brass Washer*
39 *Piston Rod Fibre Washer*
40 *Piston Rod Fibre Washer*
41 *Square Fibre Bush*
42 *Contact Screw*
43 *Switch Spider*
44 *Switch Spider Contact*
45 *Piston Rod Fibre Washer*
46 *Piston Rod Brass Washer*
47 *Lead Screw*
48 *Finger Board*
50 *Porcelain Bush for Leads*
302 *Valve Case*
303 *Cut-in Valve Cap*
304 *Cut-out Valve*
305 *Cut-in Valve*
306 *Cut-in Valve Spring*
307 *Extension Piece*
310 *Cut-out Valve Spring*
311 *Cut-in Regulating Nut*
312 *Jam Nut*
314 *Cut-out Regulating Nut*
315 *Spring Stem*
317 *Cut-out Valve Cap*
318 *Cut-in Valve Seat Retainer*
319 *Cut-in Valve Seat Washer*
320 *Cut-in Valve Washer*

Names of Parts of Fig. 1462.

2 *Frame*
3 *Guide Pin*
4 *Finger Board Insulation*
5 *Finger*
6 *Adjusting Screw Jam Nut*
7 *Finger Adjusting Screw*
8 *Finger Base*
9 *Screw for securing Finger to Finger Base*
10 *Finger Clamp*
11 *Finger Board Screw*
12 *Switch Cover*
13 *Eye Bolt Thumb Nut*
14 *Cover Eye Bolt*
15 *Eye Bolt Rivet*
16 *Switch Piston and Rod*
17 *Piston Spring*
18 *Piston Spring Seat*
19 *Piston Seal*
20 *Switch Piston Ring*
21 *Piston Washer*
23 *Piston Washer Screw*
36 *Piston Rod Cotter*
37 *Piston Rod Nut*
38 *Piston Rod Brass Washer*
39 *Piston Rod Fibre Washer*
40 *Piston Rod Fibre Washer*
41 *Square Fibre Bush*
42 *Contact Screw*
43 *Switch Spider*
44 *Switch Spider Contact*
45 *Piston Rod Fibre Washer*
46 *Piston Rod Brass Washer*
47 *Lead Screw*
48 *Finger Board*
50 *Porcelain Bush for Leads*
52 *Frame Gasket*
107 *Tee Head Bolt with Nut for securing Switch to Pneumatic Portion*
501 *Body*
502 *Cover*
503 *Cap*
504 *Armature*
505 *Armature Stem*
506 *Magnet Core*
507 *Core Pole*
508 *Magnet Coil*
510 *Button Head Cap Screw*
511 *Insulator*
512 *Brass Washer*
513 *Contact Screw*
514 *Exhaust Valve*
515 *Supply Valve*
516 *Supply Valve Spring*
517 *Supply Valve Seat*
518 *Cap Nut*

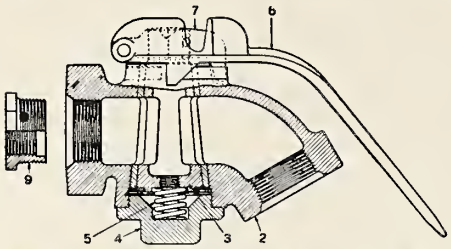

Fig. 1463—Self-Locking Angle Cock.

Names of Parts of Fig. 1463.

2 *Body*
3 *Key*
4 *Cap*
5 *Spring*
6 *Handle*
7 *Handle Socket*
9 *Bushing*

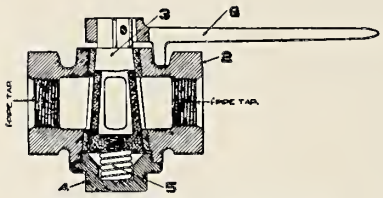

Fig. 1464—Cut-out Cock.

Names of Parts of Fig. 1464.

2 *Body*
3 *Key*
4 *Cap*
5 *Spring*
6 *Handle*

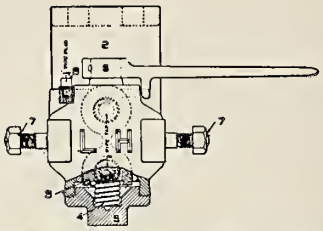

Fig. 1465—Reversing Cock.

Names of Parts of Fig. 1465.

2 *Body*
3 *Key*
4 *Key Spring*
5 *Cap*
6 *Handle*
7 *Stud and Nut*

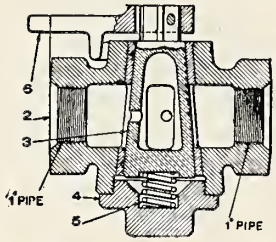

Fig. 1466—Main Reservoir Cut-out Cock.

Names of Parts of Fig. 1466.

2 *Body*
3 *Key*
4 *Cap*
5 *Spring*
6 *Handle*

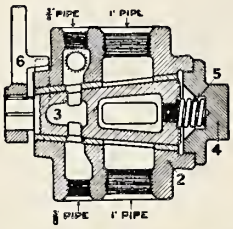

Fig. 1467—Double Cut-out Cock.

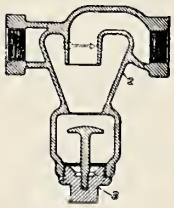

Fig. 1468 — Centrifugal Dirt Collector.

Names of Parts of Fig. 1468.

2 *Body*
3 *Deflector and Special Plug*

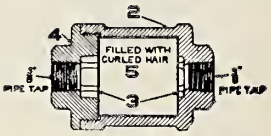

Fig. 1469—O. B. Air Strainer.

Names of Parts of Fig. 1469.

2 *Body*
3 *Strainer*
4 *Cap*
5 *Curled Hair*

Fig. 1470—Dummy Coupling.

Fig. 1471—Hose Clamp.

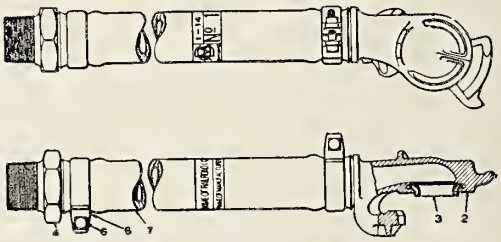

Fig. 1472—Brake Hose and Coupling.

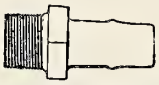

Fig. 1473—Hose Nipple.

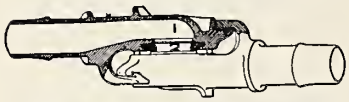

Fig. 1474—Hose Coupling.

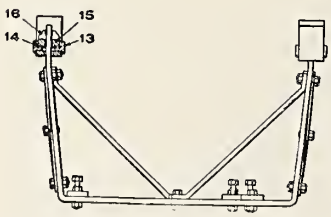

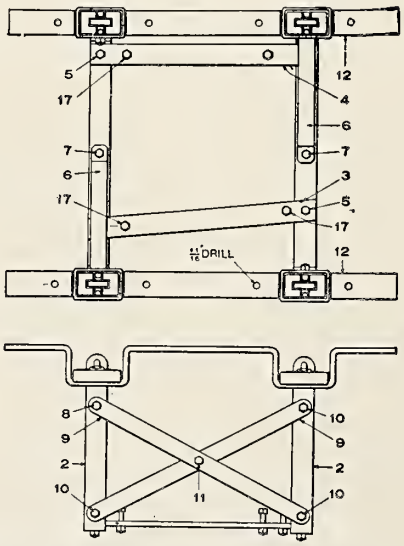

Fig. 1475—Cradle for Westinghouse Motor Driven Air Compressor.

Names of Parts of Fig. 1475.

2 *Cradle, Motor Side*
2 *Cradle, Compressor Side*
3 *Rear Support*
4 *Front Support*
5 *Support Bolt and Nut*
6 *Brace*
7 *Lower Brace Bolt*
8 *Upper Brace Bolt*
9 *Diagonal Brace*
10 *End Bolt for Diagonal Brace*
11 *Middle Bolt for Diagonal Brace*
12 *Double Bracket*
13 *Cushion Pocket*
14 *Cushion*
15 *Cushion Washer*
16 *Cradle Key*
17 *Bed Plate Bolt and Nut*

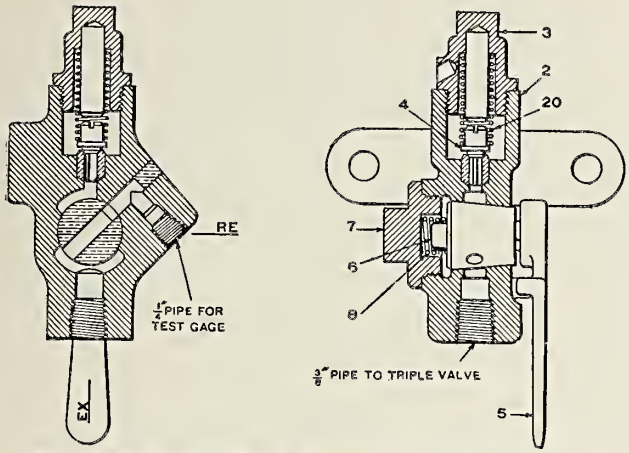

Fig. 1476—Spring Type Pressure Retaining Valve.

Names of Parts of Fig. 1476.

2 *Body*
3 *Cap Nut*
4 *Valve*
5 *Handle*
6 *Cock Key*
7 *Cock Key Cap*
8 *Cock Key Spring*
20 *Spring*

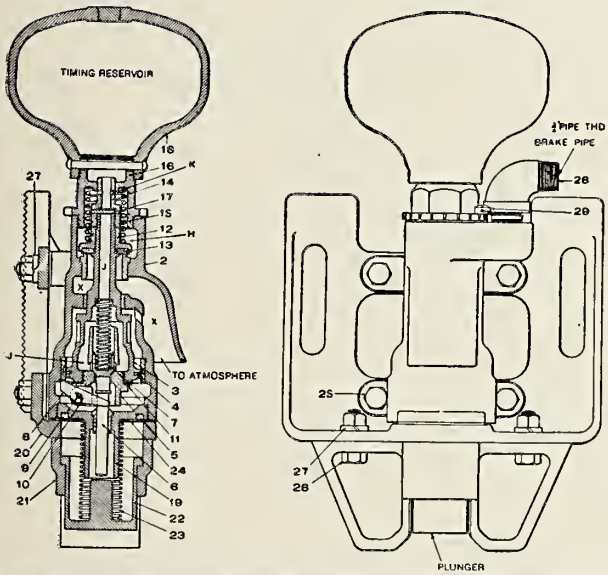

Fig. 1477—Automatic Train Stop with Timing Feature.

Names of Parts of Fig. 1477.

2 *Body*
3 *Piston*
4 *Piston Ring*
5 *Pilot Valve Seat*
6 *Pilot Valve*
7 *Pilot Valve Spring*
8 *Locking Lever*
9 *Locking Lever Pin*
10 *Locking Lever Cotter*
11 *Lock Washer*
12 *Valve*
13 *Valve Seat*
14 *Lock Nut with Timing Valve*
15 *Piston Valve Spring*
16 *Top Cap*
17 *Lock Nut Pin*
18 *Reservoir*
19 *Cap and Pilot Valve Guide*
20 *Adjusting Bracket*
21 *Plow*
22 *Plunger*
23 *Plunger Spring*
24 *Adjusting Bracket Gasket*
25 *Hexagon Head Bolt and Nut*
26 *Hexagon Head Bolt and Nut*
27 *Lock Washer*
28 *Street Ell*
29 *Fillister Head Cap Screw*

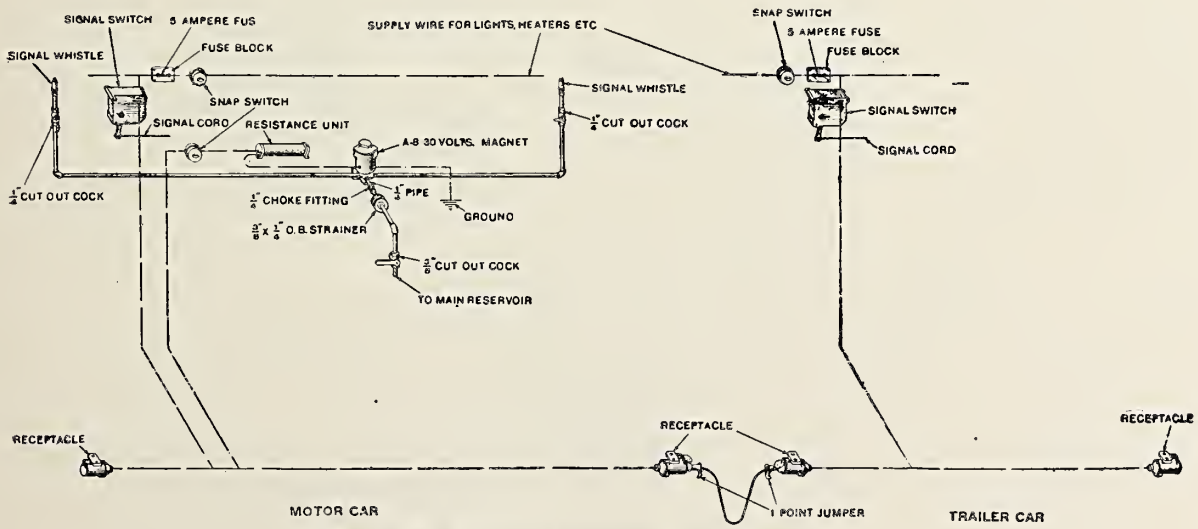

Fig. 1478—Electro-Pneumatic Train Signal.

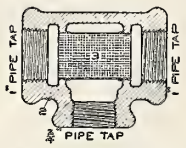

Fig. 1479—Tee with Strainer

Fig. 1480—Air Whistle.

Names of Parts of Fig. 1481.

2 *Diaphragm Case*
3 *Diaphragm Cap*
4 *Union Swivel*
5 *Union Nut*
6 *Union Gasket*
7 *Eye Bolt and Nut*
8 *Diaphragm Valve Nut*
9 *Eye Bolt Rivet*
10 *Lower Diaphragm Plate and Valve Stem*
11 *Upper Diaphragm Plate*
12 *Diaphragm*
13 *Union Nut*
14 *Union Gasket*
15 *Union Swivel*
16 *Lower Cap Nut*
17 *Pin for Diaphragm Valve Nut*

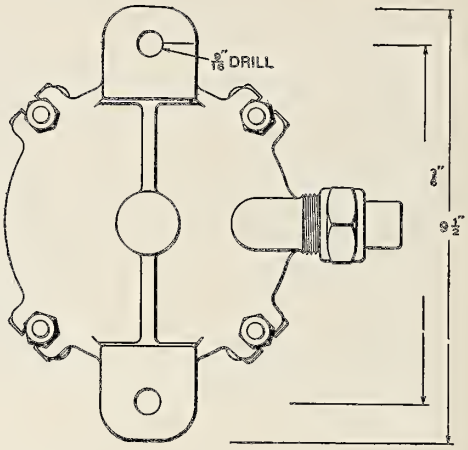

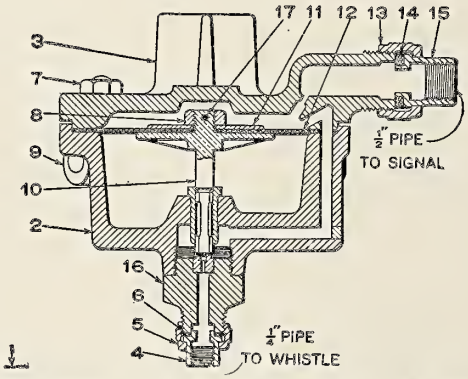

Fig. 1481—Train Air Signal Valve and Whistle.

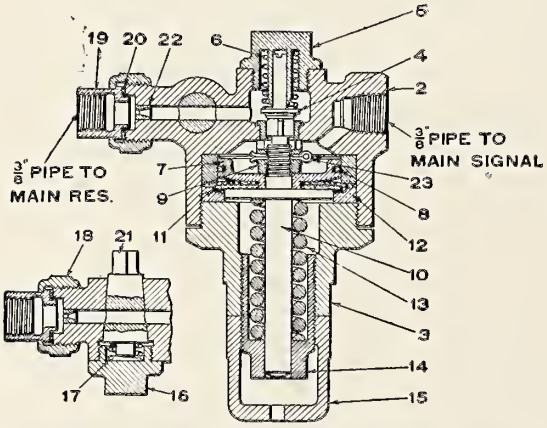

Fig. 1482—Train Air Signal Reducing Valve.

Names of Parts of Fig. 1482.

2 *Body, bushed*
3 *Spring Box*
4 *Supply Valve*
5 *Supply Valve Cap*
6 *Supply Valve Spring*
7 *Piston (includes 8)*
8 *Piston Ring*
9 *Piston Nut*
10 *Piston Rod*
11 *Large Diaphragm*
11 *Small Diaphragm*
12 *Diaphragm Ring*
13 *Regulating Spring*
14 *Regulating Nut*
15 *Check Nut*
16 *Cock Cap*
17 *Cock Spring*
18 *3/8-inch Union Nut*
19 *3/8-inch Union Swivel*
20 *3/8-inch Union Gasket*
21 *Cock Key*
22 *Choke Plug*
23 *Cotter*

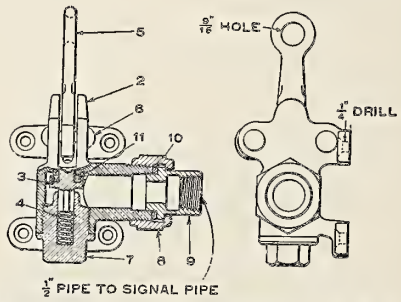

Fig. 1483—Train Air Signal Car Discharge Valve.

Names of Parts of Fig. 1483.

2 *Body*
3 *Stem*
4 *Spring*
5 *Handle*
6 *Stop Pin*
7 *Cap*
8 *Union Nut*
9 *Union Swivel*
10 *Gasket*
11 *Rubber Seat*

Names of Parts of Fig. 1484.

2 *Body*
3 *Cap Nut*
4 *Valve*
5 *Spring*
6 *Handle*
7 *Fillister Head Screw*
8 *Thimble*
9 *Thimble Seat*

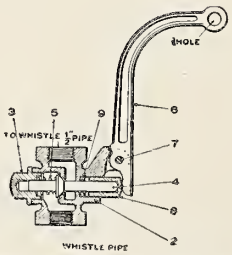

Fig. 1484—Air Whistle Valve.

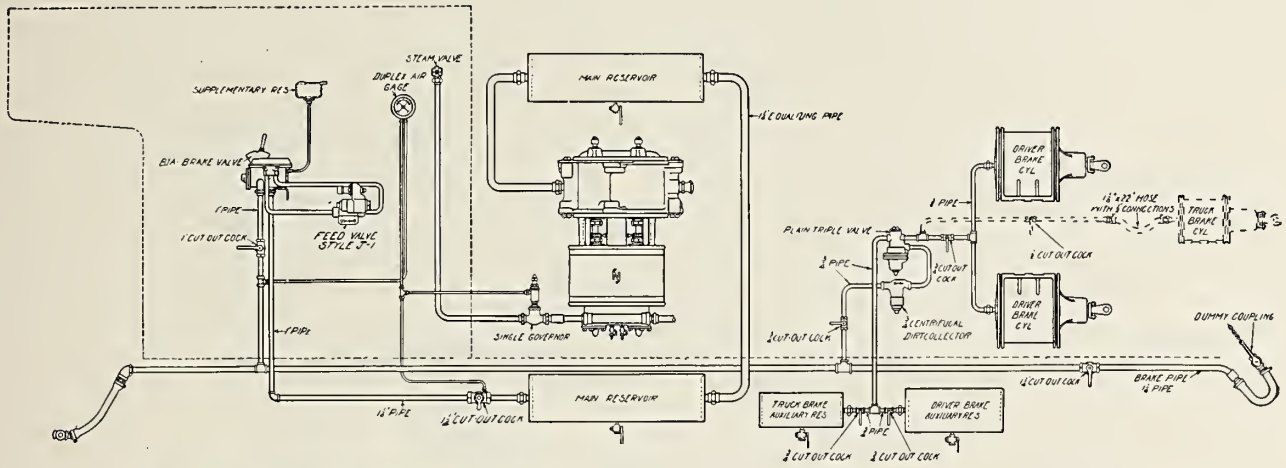

Fig. 1485—Piping Diagram of New York Locomotive Brake Equipment, Schedule B1-A.

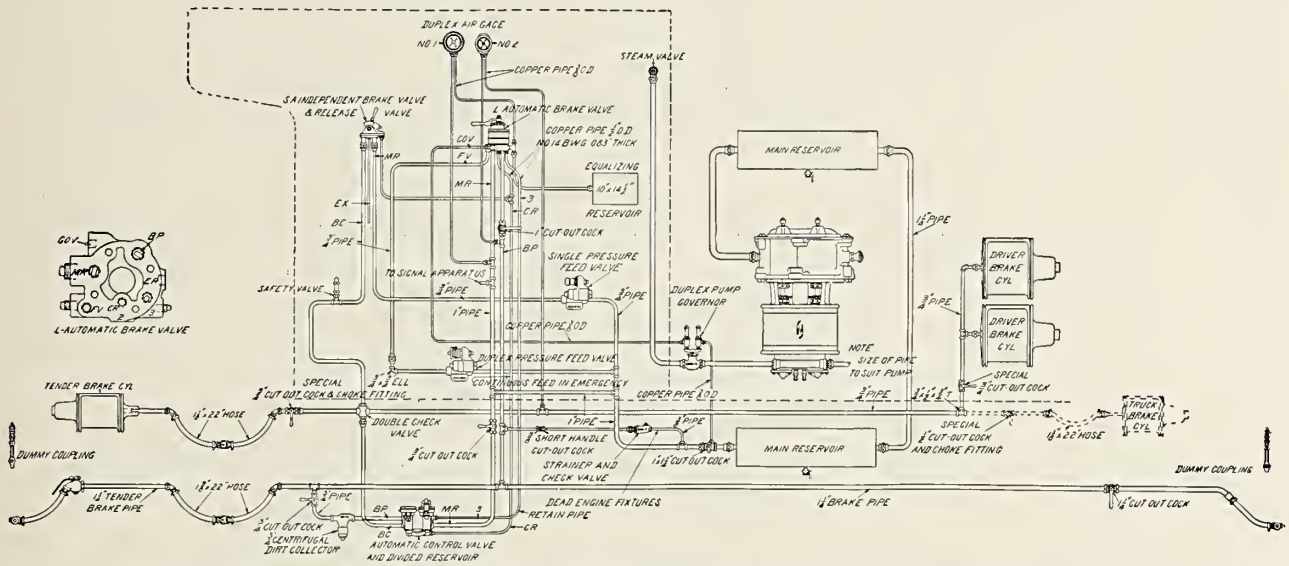

Fig. 1486—Piping Diagram of New York Automatic Control Equipment, Schedule LT-1.

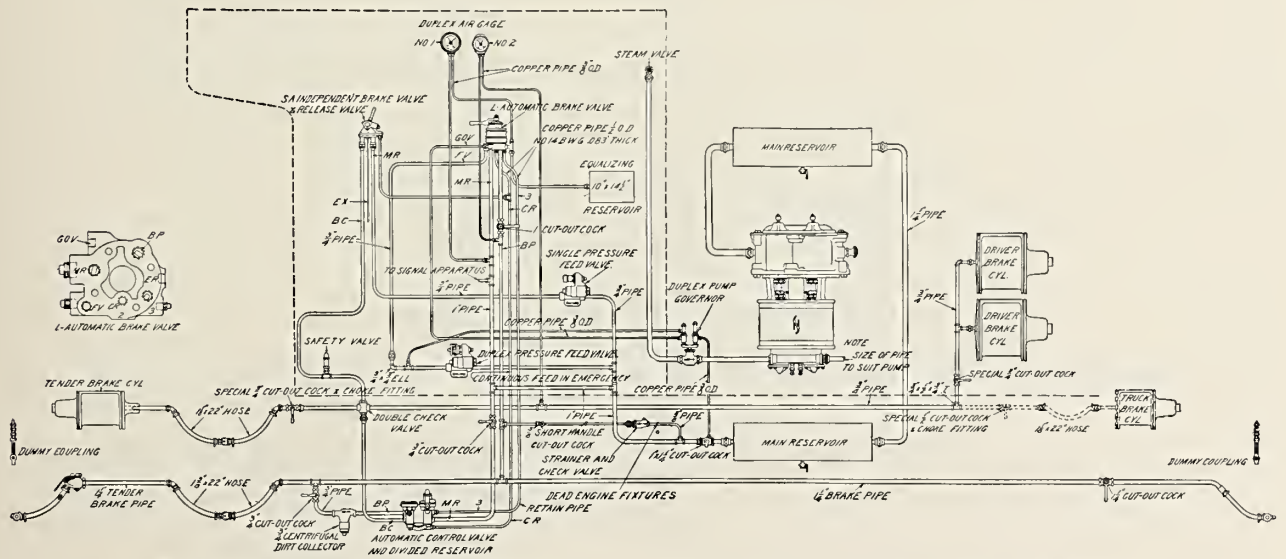

Fig. 1487—Piping Diagram of New York Automatic Control Equipment, Schedule LT-5.

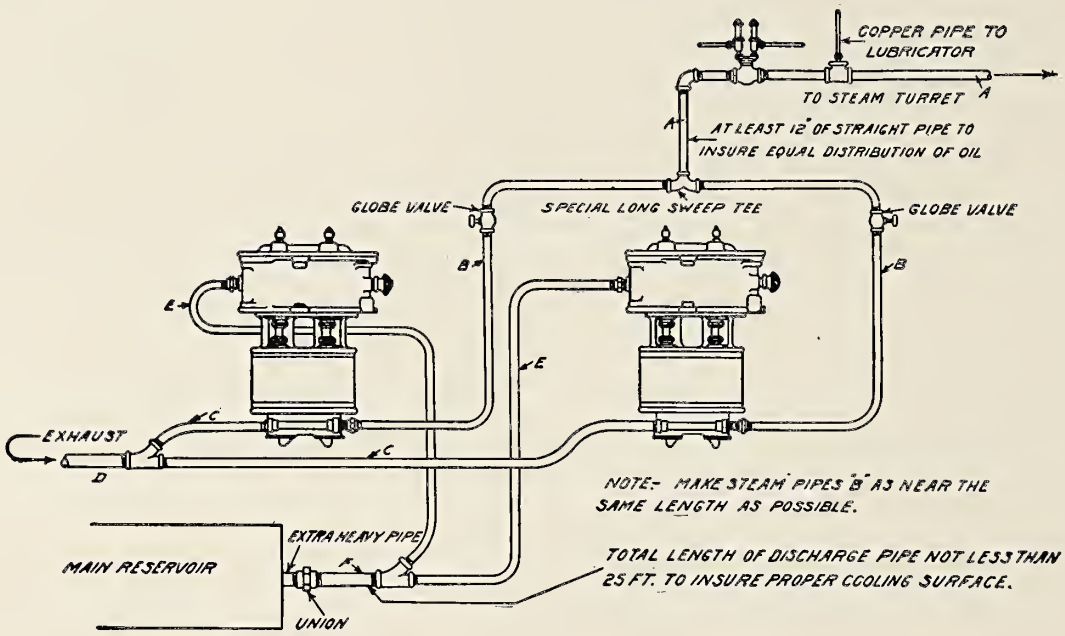

Fig. 1488—Piping Diagram for Two Pumps per Locomotive, Style A.

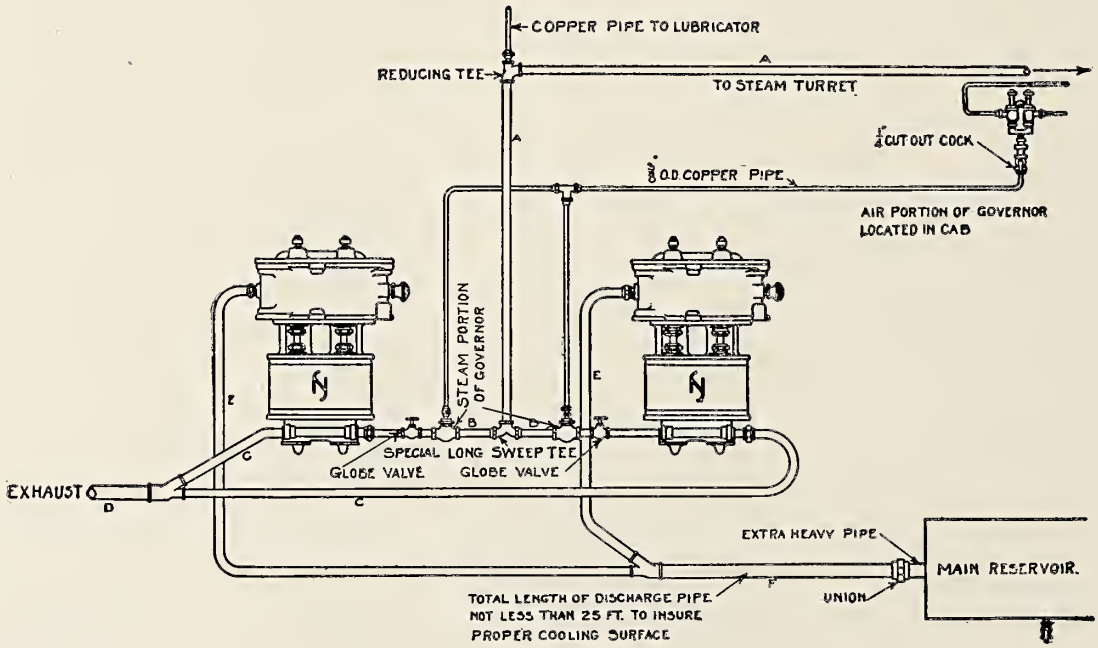

Fig. 1489—Piping Diagram for Two Pumps per Locomotive, Style B.

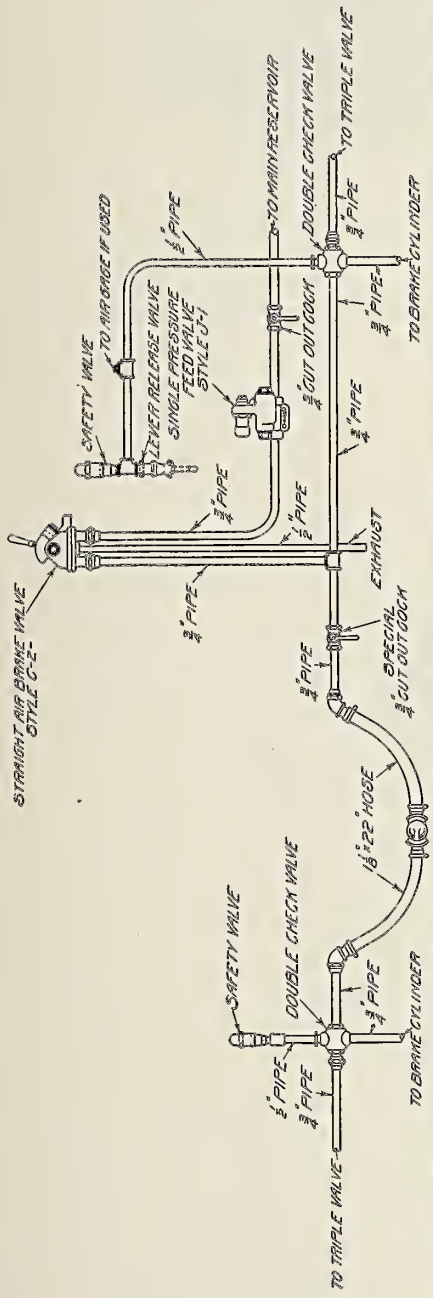

Fig. 1490—Piping Diagram of New York Independent Straight Air Brake for Locomotive and Tender, Schedule SAE, SAT.

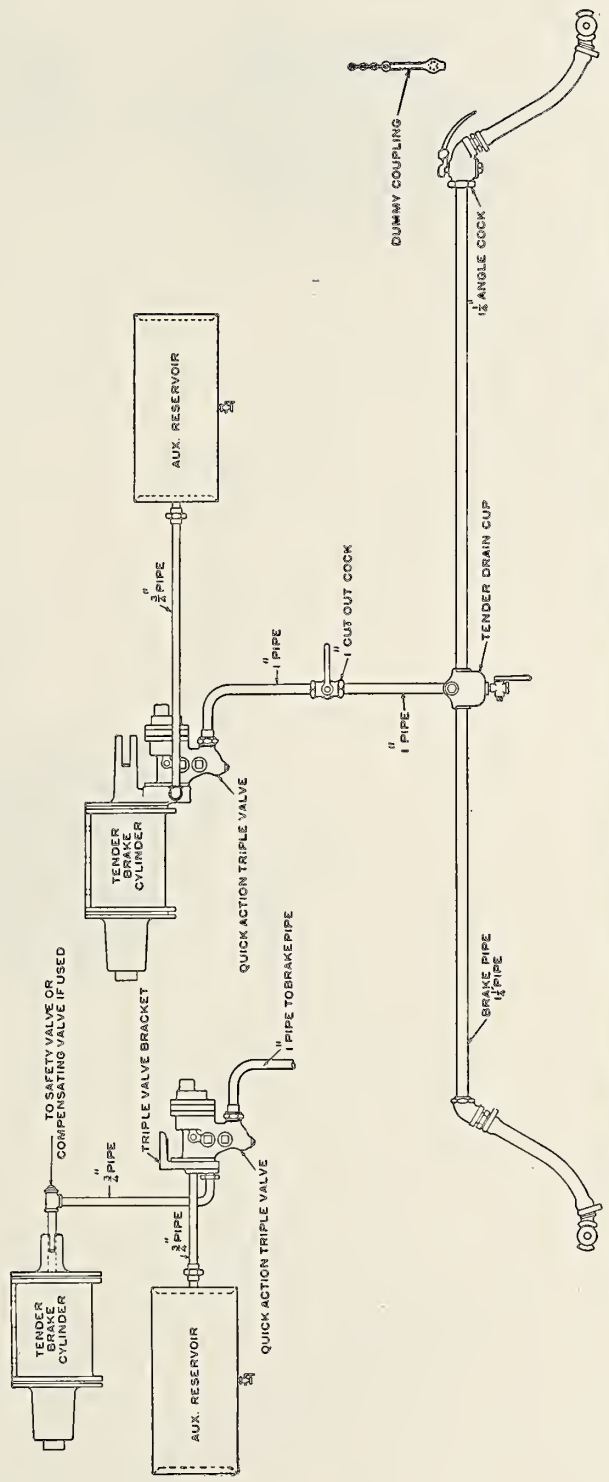

Fig. 1491—Piping Diagram of Standard Tender Equipment with Quick-Action Triple Valve, Schedule T.Q.

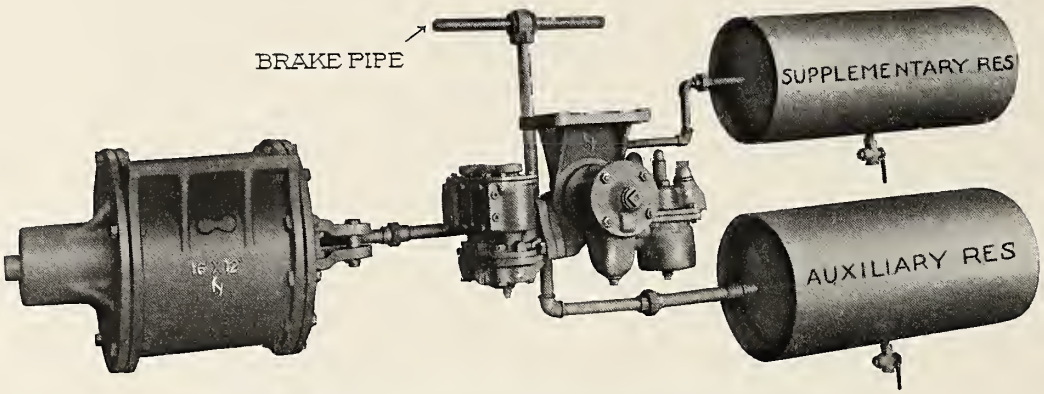

Fig. 1492—The PS Electro-Pneumatic Brake Equipment.

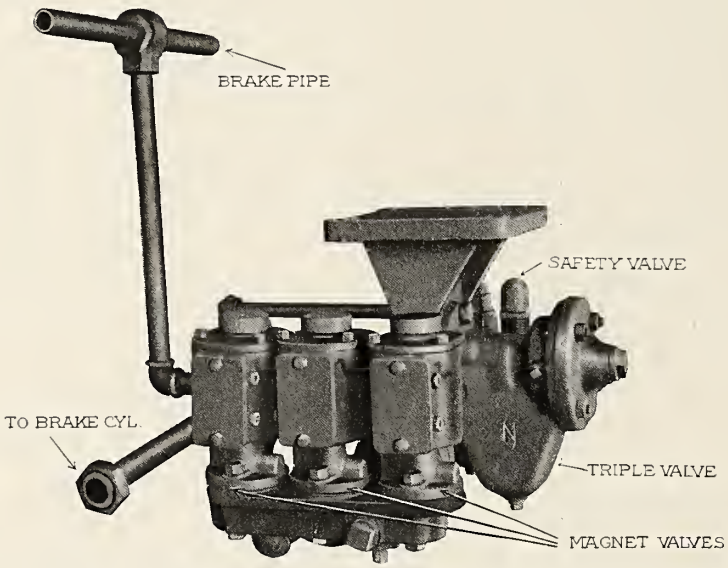

Fig. 1493—Detail of PS Electro-Pneumatic Brake Equipment Shown in Fig. 1492.

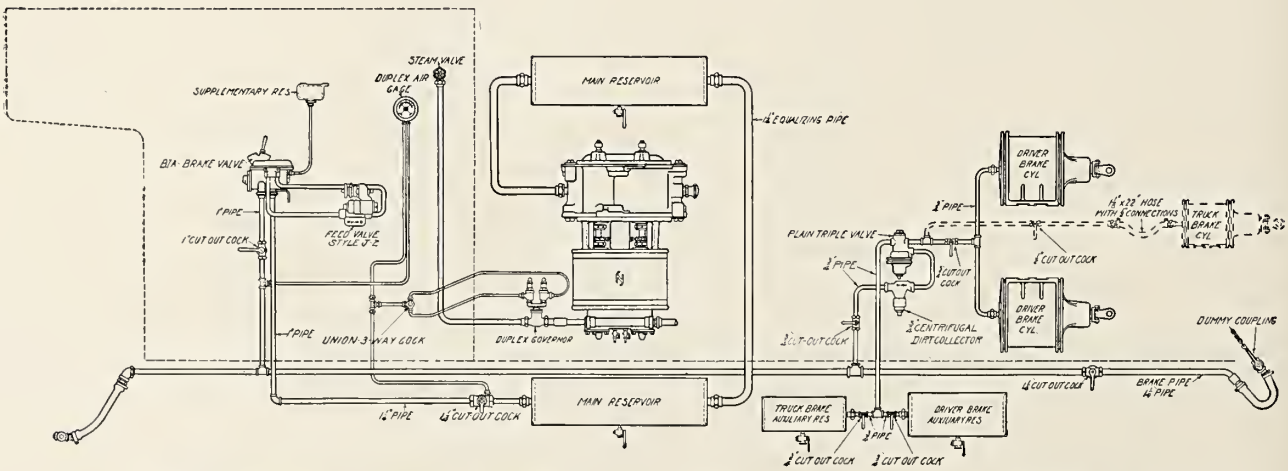

Fig. 1494—Piping Diagram of New York Locomotive Brake Equipment, Schedule B1-B.

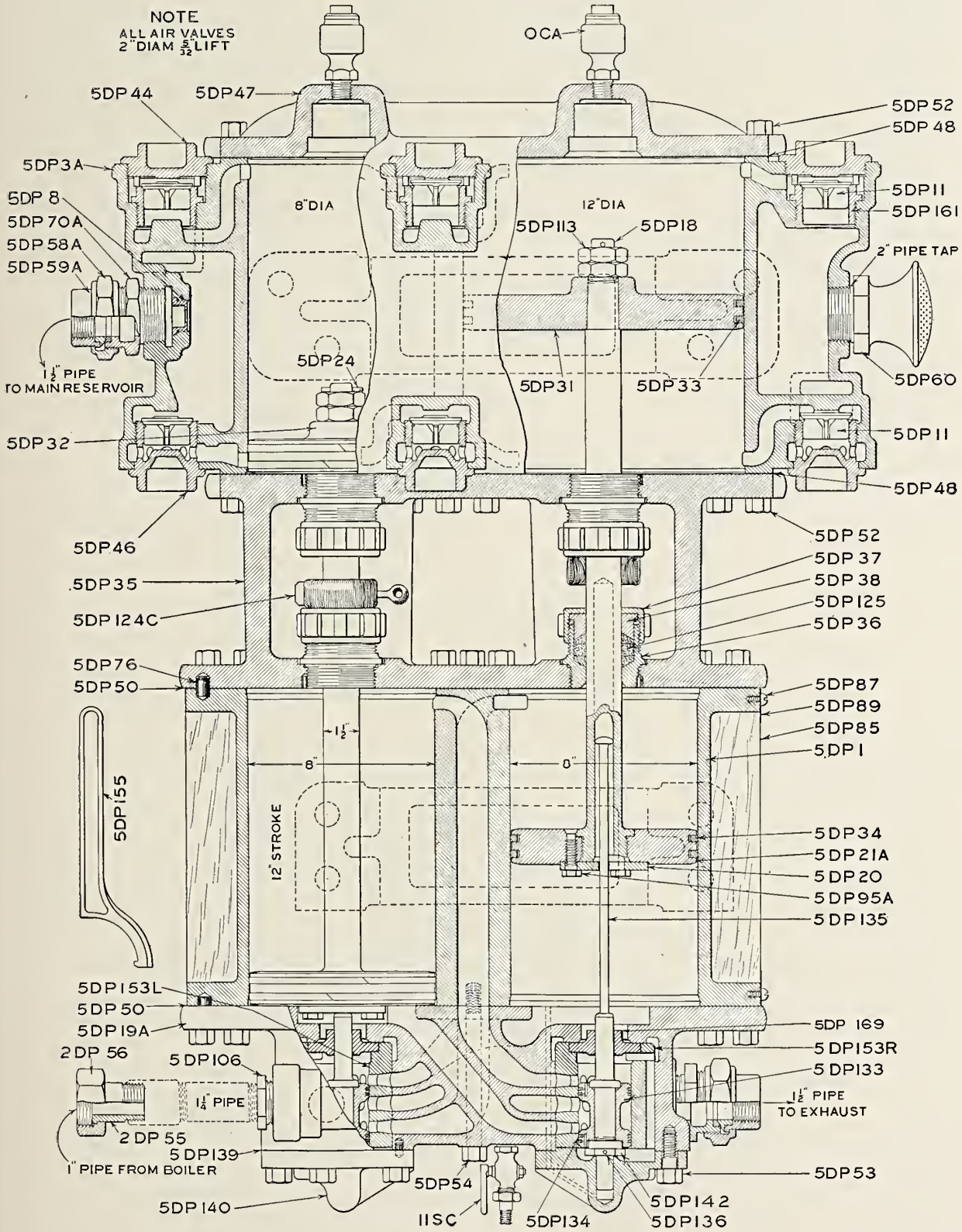

Fig. 1495—New York No. 5B Piston Valve Duplex Air Pump.

Names of Parts of No. 5B Duplex Air Pump, Fig. 1495

5 DP 1	*Steam Cylinders*
5 DP 3A	*Air Cylinders*
5 DP 11	*Air Valve*
5 DP 18	*Piston Rod*
5 DP 19A	*Steam Head*
5 DP 20	*Tappet Plate*
5 DP 21A	*Steam Piston*
5 DP 24	*Cotter*
5 DP 31	*Air Piston*
5 DP 32	*Air Piston*
5 DP 33	*Piston Ring*
5 DP 34	*Piston Ring*
5 DP 35	*Center Piece*
5 DP 36	*Stuffing Box*
5 DP 37	*Stuffing Box Nut*
5 DP 38	*Stuffing Box Gland*
5 DP 44	*Upper Valve Cap*
5 DP 161	*Upper Valve Seat*
5 DP 46	*Lower Valve Seat*
5 DP 47	*Top Head*
5 DP 48	*Air Cylinder Gasket*
5 DP 50	*Steam Cylinder Gasket*
5 DP 52	*Tap Bolt*
5 DP 53	*Tap Bolt*
5 DP 54	*Tap Bolt*
2 DP 58A	*Governor Union Stud*
2 DP 59A	*Governor Union Nut*
5 DP 60	*Air Strainer*
5 DP 70A	*Union Stud*
5 DP 76	*Dowel*
5 DP 85	*Steam Cylinder Jacket*
5 DP 87	*Jacket Screw*
5 DP 89	*Steam Cylinder Jacket Band*
5 DP 95A	*Tappet Plate Bolt*
5 DP 106	*Reducer*
5 DP 113	*Piston Rod Nut*
5 DP 124C	*Piston Rod Swab*
5 DP 125	*Piston Rod Packing*
5 DP 133	*Piston Valve*
5 DP 134	*Piston Valve Ring*
5 DP 135	*Valve Stem*
5 DP 136	*Valve Stem Pin*
5 DP 139	*Steam Chest Gasket*
5 DP 140	*Steam Chest Cap*
5 DP 142	*Valve Stem Nut*
5 DP 150	*Pipe Plug*
5 DP 151	*Pipe Plug*
5 DP 153R	*Steam Chest Bushing*
5 DP 153L	*Steam Chest Bushing*
5 DP 155	*Packing Nut Wrench*
5 DP 168	*Steam Piston Rod*
11 SC	*Pump Drain Cock*
OCA	*Automatic Oil Cup, Style A*

Names of Parts of No. 6A Duplex Air Pump, Fig. 1496.

6 DP 1	*Steam Cylinders*
6 DP 3A	*Air Cylinders*
6 DP 11	*Air Valve*
6 DP 18	*Piston Rod*
6 DP 19A	*Steam Head*
5 DP 20	*Tappet Plate*
6 DP 21A	*Steam Piston*
6 DP 24	*Cotter*
6 DP 31	*Air Piston*
6 DP 32	*Air Piston*
6 DP 33	*Piston Ring*
6 DP 34	*Piston Ring*
6 DP 35	*Center Piece*
6 DP 36	*Stuffing Box*
6 DP 37	*Stuffing Box Nut*
6 DP 38	*Stuffing Box Gland*
6 DP 44	*Upper Valve Cap*
6 DP 45	*Upper Valve Seat*
6 DP 46	*Lower Valve Seat*
6 DP 47	*Top Head*
6 DP 48	*Air Cylinder Gasket*
6 DP 50	*Steam Cylinder Gasket*
6 DP 52	*Tap Bolt*
5 DP 53	*Tap Bolt*
5 DP 54	*Tap Bolt*
2 DP 55	*Governor Union Stud*
2 DP 56	*Governor Union Nut*
2 DP 58A	*Union Nut*
2 DP 59A	*Union Swivel*
6 DP 60	*Air Strainer*
2 DP 70A	*Union Stud*
5 DP 76	*Dowel*
6 DP 85	*Steam Cylinder Jacket*
5 DP 87	*Jacket Screw*
6 DP 89	*Steam Cylinder Jacket Band*
6 DP 95A	*Tappet Plate Bolt*
1 DP 114	*Piston Rod Nut*
6 DP 124C	*Piston Rod Swab*
6 DP 125	*Piston Rod Packing*
5 DP 133	*Piston Valve*
5 DP 134	*Piston Valve Ring*
6 DP 135	*Valve Stem*
5 DP 136	*Valve Stem Pin*
5 DP 139	*Steam Chest Gasket*
5 DP 140	*Steam Chest Cap*
5 DP 142	*Valve Stem Nut*
6 DP 150	*Pipe Plug*
5 DP 151	*Pipe Plug*
6 DP 151	*Packing Nut Wrench*
5 DP 153R	*Steam Chest Bushing*
5 DP 153L	*Steam Chest Bushing*
6 DP 168	*Steam Piston and Rod*
11 SC	*Pump Drain Cock*
OCA	*Automatic Oil Cup, Style A*

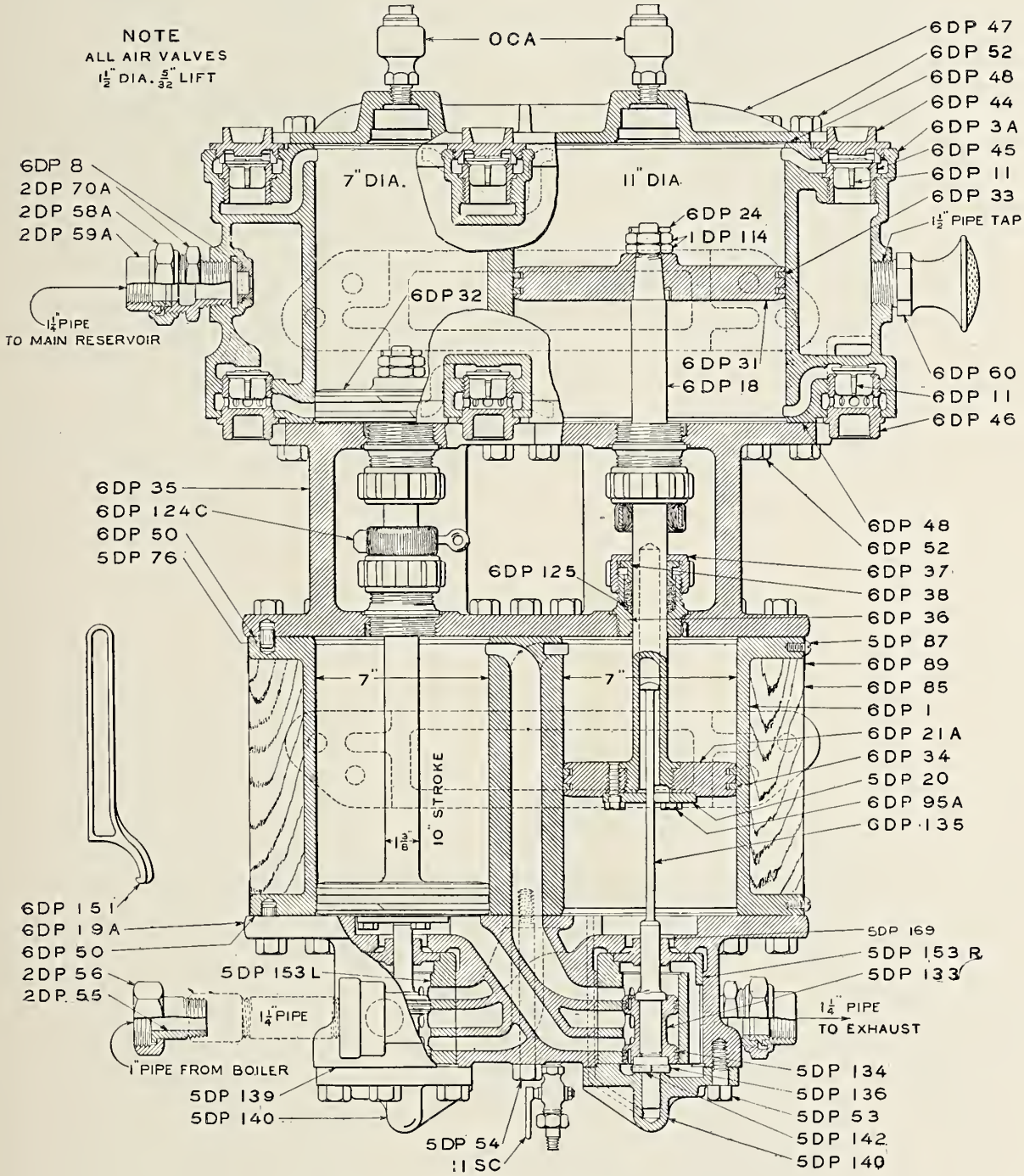

Fig. 1496—New York No. 6A Duplex Air Pump.

Names of Parts of Fig. 1497.

PG 37	*Air Union Nut*
PG 38	*Union Gasket*
PG 125	*Steam Valve Body*
PG 127	*Cylinder Cap*
PG 128	*Piston*
PG 129	*Packing Ring*
PG 130	*Piston Nut*
PG 131	*Piston Spring*
PG 132A	*Cylinder Body*
PG 137	*Diaphragm Body*
PG 138	*Spring Box*
PG 139	*Check Nut*
PG 140	*Regulating Nut*
PG 141	*Regulating Spring*
PG 142A	*Spring Abutment*
PG 142B	*Diaphragm Nut*
PG 142C	*Diaphragm Washer*
PG 142D	*Diaphragm Valve*
PG 142E	*Valve Spring*
PG 142F	*Diaphragm*
PG 143	*Diaphragm Ring*
PG 157	*Strainer*
PG 221	*Union Swivel*
1 DP 58	*Union Nut*
1 DP 59	*Union Swivel*

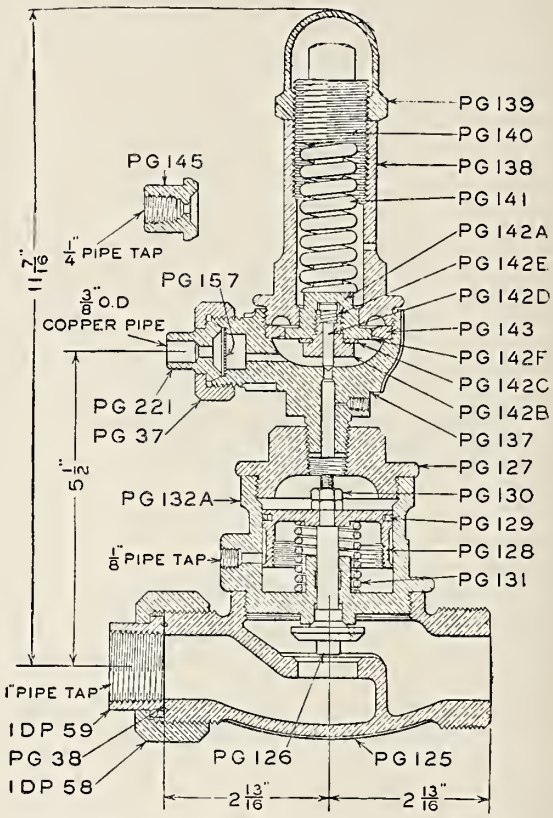

Fig. 1497—Single Pump Governor, Style E.

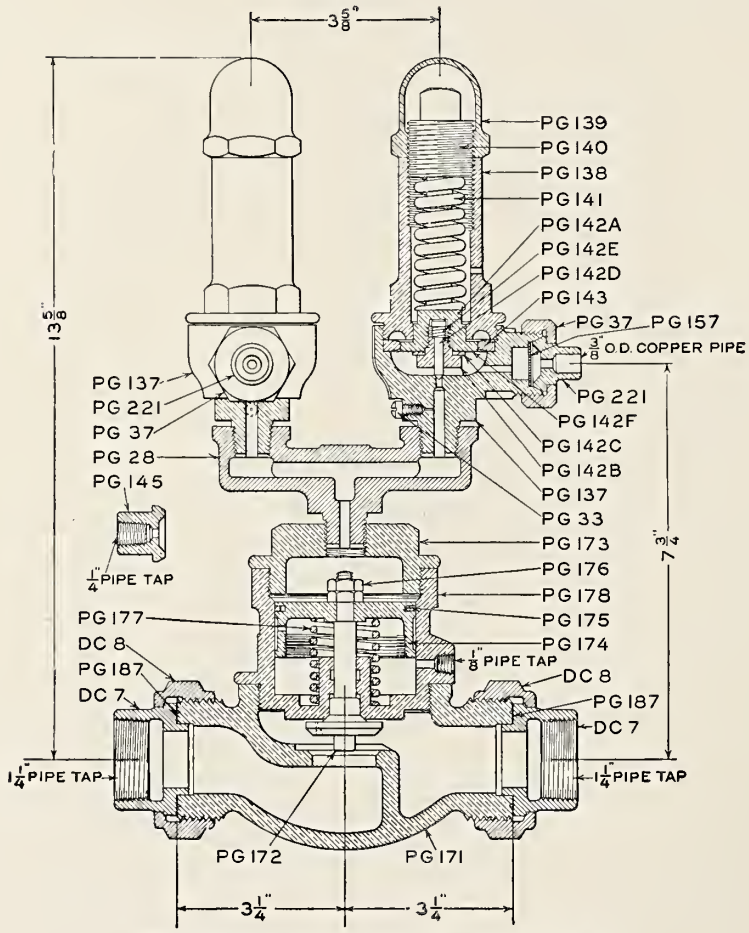

Fig. 1498—Duplex Pump Governor, Style F.

Names of Parts of Fig. 1498.

PG 28	*Duplex Fitting*
PG 33	*Vent Plug*
PG 37	*Air Union Nut*
PG 140	*Regulating Nut*
PG 141	*Regulating Spring*
PG 142A	*Spring Abutment*
PG 142B	*Diaphragm Nut*
PG 142C	*Diaphragm Washer*
PG 142D	*Diaphragm Valve*
PG 142E	*Diaphragm Valve Spring*
PG 142F	*Diaphragm*
PG 143	*Diaphragm Ring*
PG 145	*Air Union Swivel*
PG 157	*Strainer*
PG 171	*Steam Valve Body*
PG 172	*Steam Valve*
PG 173	*Cylinder Cap*
PG 174	*Piston*
PG 175	*Piston Packing Ring*
PG 176	*Piston Nut*
PG 177	*Piston Spring*
PG 178	*Cylinder Body*
PG 187	*Steam Union Gasket*
PG 221	*Air Union Swivel*
PG 137	*Diaphragm Body*
PG 138	*Spring Box*
PG 139	*Check Nut*
DC 7	*Union Swivel*
DC 8	*Union Nut*

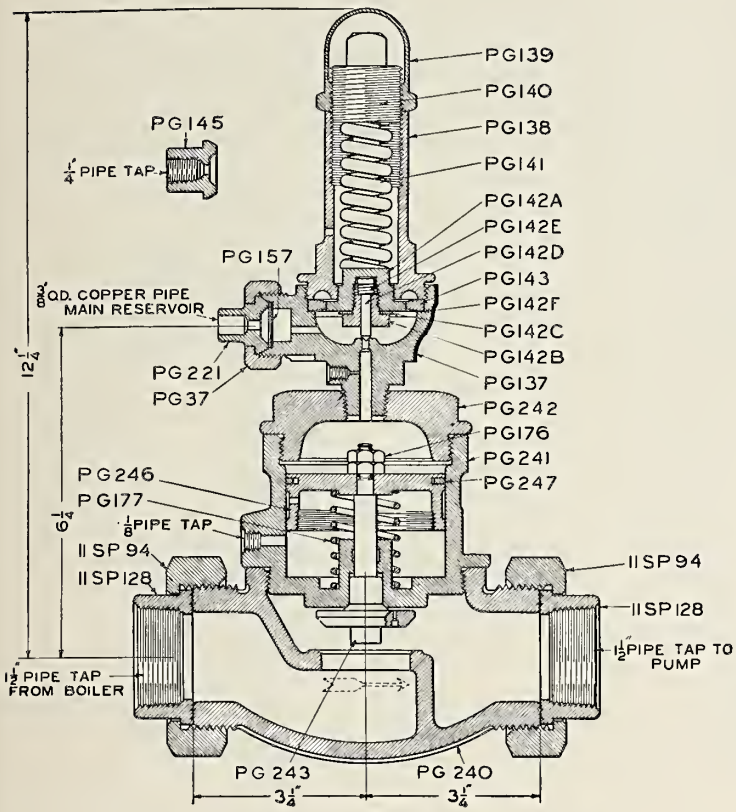

Fig. 1499—Single Pump Governor, Style K.

Names of Parts of Fig. 1499.

PG 37	*Air Union Nut*
PG 137	*Diaphragm Body*
PG 138	*Spring Box*
PG 139	*Check Nut*
PG 140	*Regulating Nut*
PG 141	*Regulating Spring*
PG 142A	*Spring Abutment*
PG 142B	*Diaphragm Nut*
PG 142C	*Diaphragm Washer*
PG 142D	*Diaphragm Valve*
PG 142E	*Diaphragm Valve Spring*
PG 142F	*Diaphragm*
PG 143	*Diaphragm Ring*
PG 145	*Air Union Swivel*
PG 240	*Steam Valve Body*
PG 243	*Steam Valve Complete*
PG 242	*Cylinder Cap*
PG 246	*Piston*
PG 247	*Piston Packing Ring*
PG 176	*Piston Nut*
PG 177	*Piston Spring*
PG 241	*Cylinder Body*
11 SP 94	*Union Nut*
11 SP 128	*Union Swivel*

Names of Parts of Fig. 1500.

PG 28	*Duplex Fitting*
PG 33	*Vent Plug*
PG 37	*Air Union Nut*
PG 38	*Gasket*
PG 125	*Steam Valve Body*
PG 126	*Steam Valve*
PG 127	*Cylinder*
PG 128	*Piston*
PG 129	*Piston Ring*
PG 130	*Piston Nut*
PG 131	*Piston Spring*
PG 132A	*Body*
PG 137	*Diaphragm Body*
PG 138	*Spring Box*
PG 139	*Check Nut*
PG 140	*Regulating Nut*
PG 141	*Regulating Spring*
PG 142A	*Spring Abutment*
PG 142B	*Diaphragm Nut*
PG 142C	*Diaphragm Washer*
PG 142D	*Diaphragm Valve*
PG 142E	*Valve Spring*
PG 142F	*Diaphragm*
PG 143	*Diaphragm Ring*
PG 145	*Union Swivel*
PG 157	*Strainer*
PG 181	*Spring Box*
PG 182	*Spring Box Extension*
PG 183	*Check Nut*
PG 184	*Regulating Nut*
PG 185	*Regulating Spring*
PG 186	*Spring Abutment*
PG 221	*Air Union Swivel*
1 DP 58	*Union Nut*
1 DP 59	*Union Swivel*
EV 158	*Union Swivel*
EV 616	*Union Nut*
EV 695	*Union Stud*

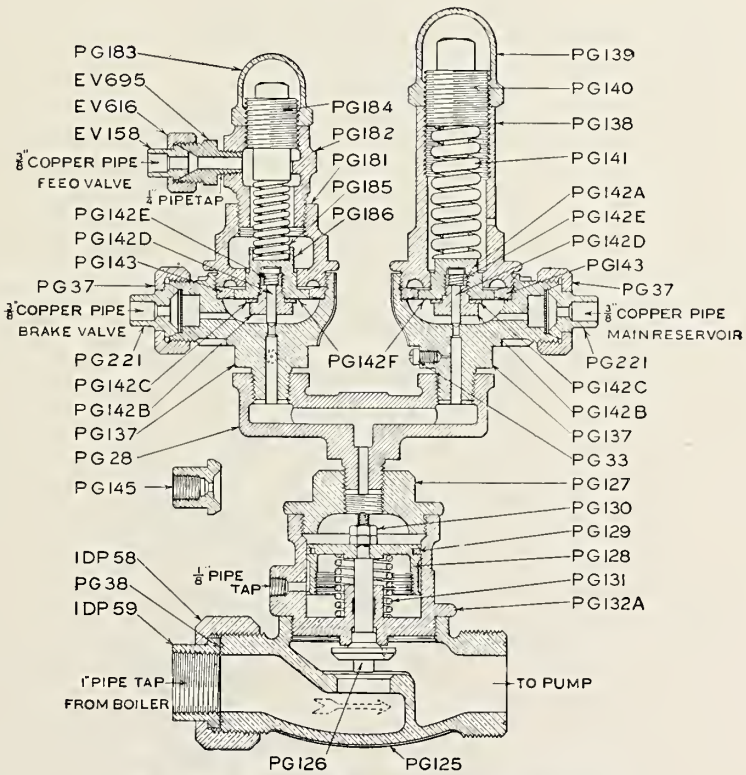

Fig. 1500—Duplex Pump Governor, Style EX.

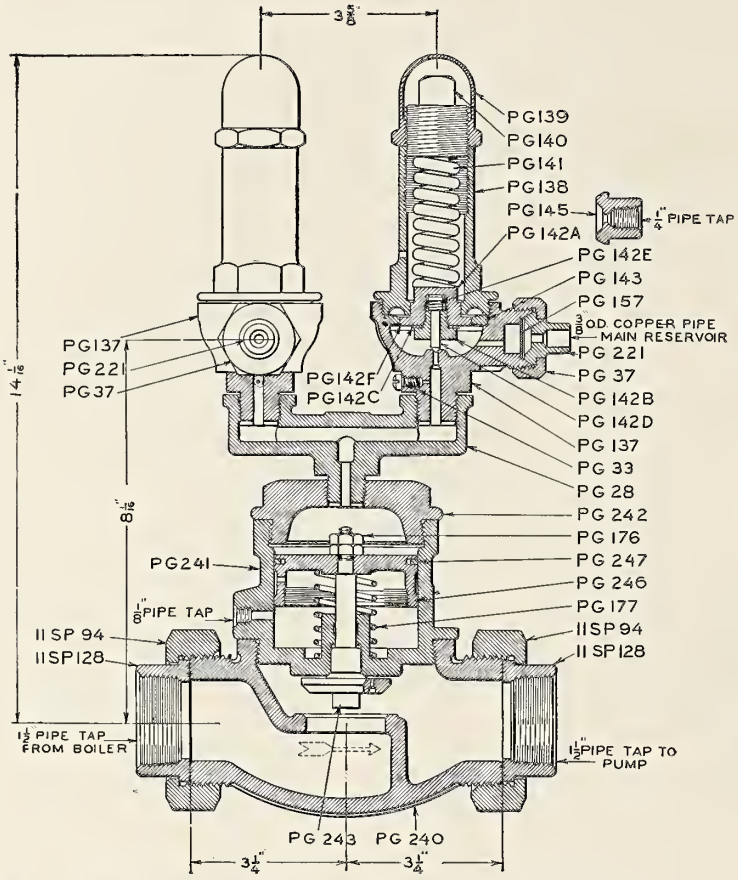

Fig. 1501—Duplex Pump Governor, Style KD.

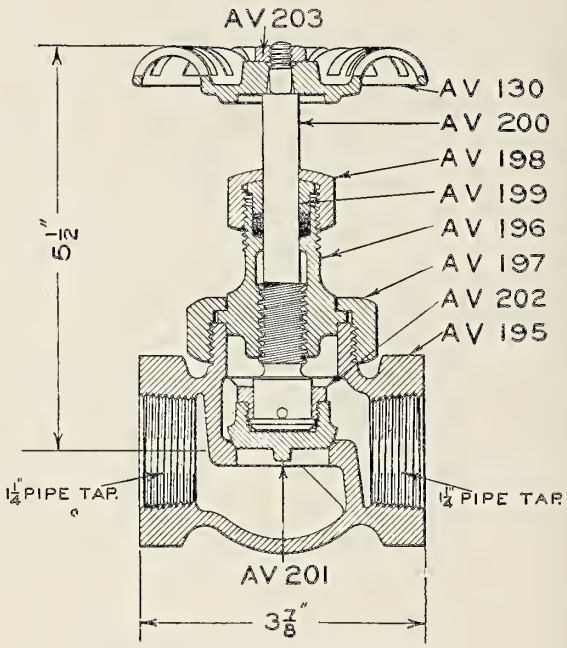

Fig. 1502—Globe Steam Valve.

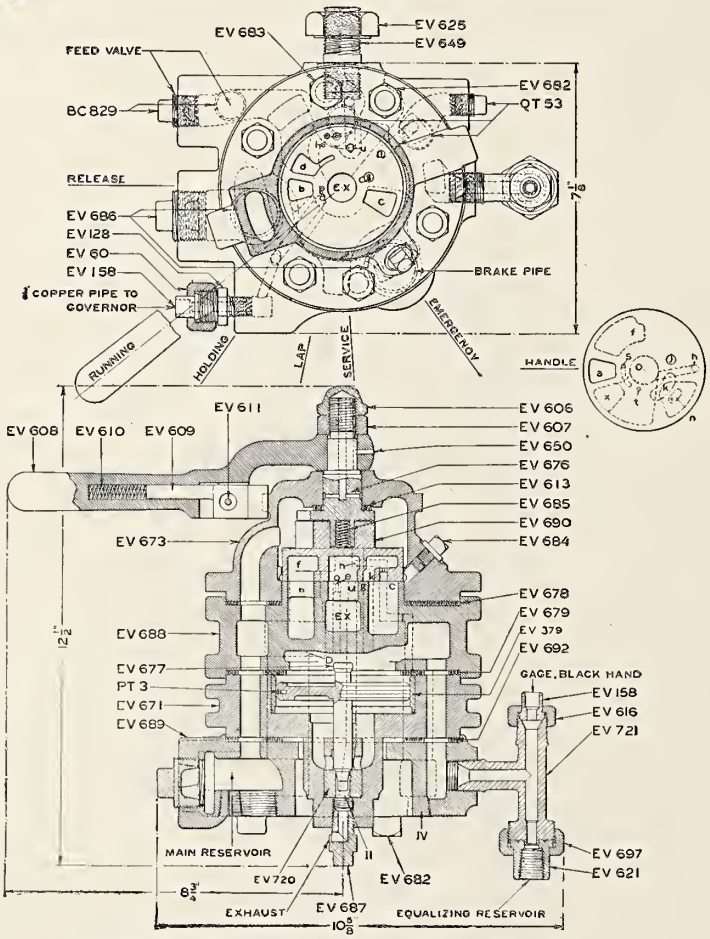

Fig. 1503—Engineer's Brake Valve, Style L.

Names of Parts of Fig. 1503.

EV 60	*Union Nut*
EV 128	*Union Stud*
EV 158	*Union Swivel*
EV 606	*Handle Lock Nut*
EV 607	*Handle Nut*
EV 608	*Handle*
EV 609	*Latch*
EV 610	*Latch Spring*
EV 611	*Latch Screw*
EV 613	*Key Washer*
EV 616	*Union Nut*
EV 621	*Pipe Swivel*
EV 625	*Holding Nut*
EV 649	*Holding Stud*
EV 671	*Bottom Case*
EV 673	*Top Case*
EV 676	*Rotary Valve Key*
EV 677	*Equalizing Piston*
EV 678	*Upper Gasket*
EV 679	*Middle Gasket*
EV 682	*Bolt and Nut*
EV 683	*Cap Screw*
EV 684	*Oil Plug*
EV 685	*Rotary Valve Spring*
EV 686	*One-inch Pipe Plug*
EV 687	*Exhaust Fitting*
EV 689	*Pipe Bracket*
EV 690	*Rotary Valve*
EV 692	*Lower Gasket*
EV 697	*Union Nut*
EV 721	*Gage and Reservoir Tee*
BC 829	*Pipe Plug*
PT 3	*Piston Ring*
QT 53	*Pipe Plug*

L

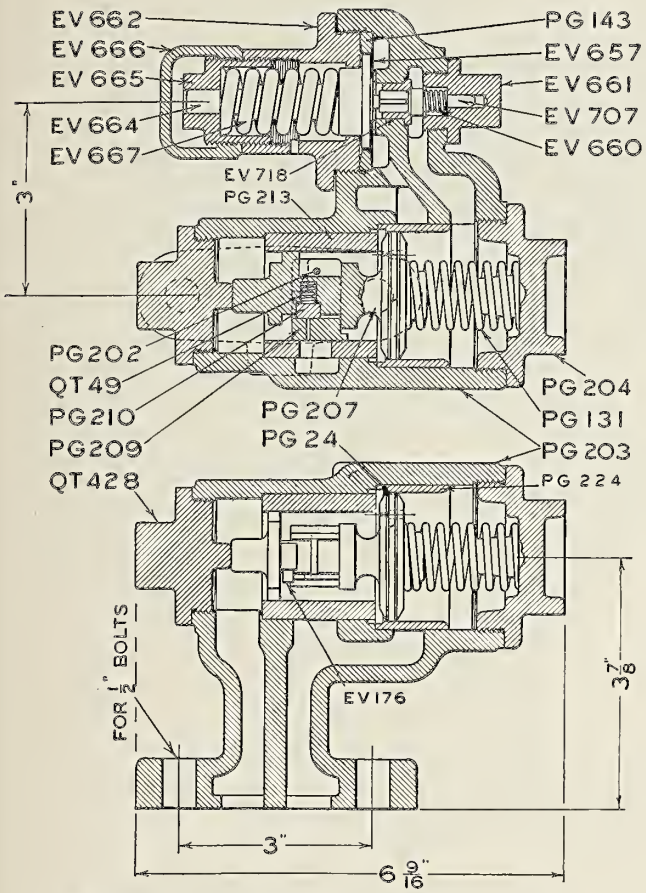

Fig. 1504—Single Pressure Controller, Style J1.

Names of Parts of Fig. 1504.

PG 24	*Piston Ring*
PG 131	*Piston Spring*
PG 143	*Diaphragm Ring*
PG 202	*Slide Valve Pin*
PG 203	*Body*
PG 204	*Supply Cap*
PG 207	*Piston*
PG 209	*Slide Valve*
PG 210	*Graduating Valve*
EV 627	*Feed Valve Gasket*
EV 657	*Diaphragm*
EV 660	*Regulating Valve Spring*
EV 661	*Regulating Valve Nut*
EV 662	*Spring Box*
EV 664	*Diaphragm Spindle*
EV 665	*Regulating Nut*
EV 666	*Check Nut*
EV 667	*Regulating Spring*
EV 707	*Regulating Valve*
QT 49	*Graduating Valve Spring*
QT 428	*Body Cap*

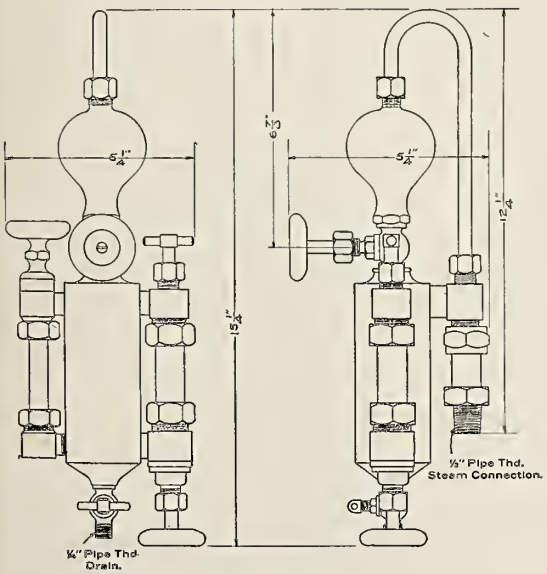

Fig. 1505—Air Pump Lubricator.

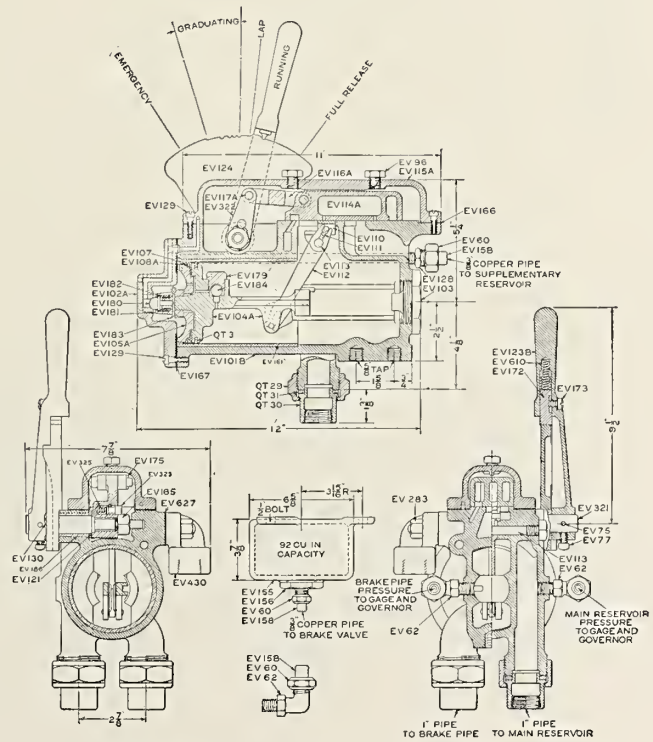

Fig. 1506—Engineer's Brake Valve, Style B1-A.

Names of Parts of Fig. 1506.

EV 60	*Small Union Nut*
EV 61	*Small Union Swivel*
EV 62	*Small Union Ell*
EV 75	*Handle Pin*
EV 77	*Handle Set Screw*
EV 96	*Oil Pump*
EV 101B	*Body*
EV 102A	*Back Cap*
EV 103	*End Plug*
EV 104A	*Piston*
EV 105A	*Follower*
EV 107	*Packing Leather*
EV 108A	*Expander*
EV 110	*Graduating Valve*
EV 111	*Valve Spring*
EV 112	*Valve Lever*
EV 113	*Fulcrum Pin*
EV 114A	*Slide Valve*
EV 115A	*Valve Cover*
EV 116A	*Link*
EV 117A	*Link Pin*
EV 121	*Lever Shaft Packing*
EV 123D	*Handle*
EV 124	*Quadrant*
EV 128	*Union Stud*
EV 129	*Cover Screw*
EV 130	*Quadrant Screw*
EV 155	*Supplementary Reservoir*
EV 156	*Reservoir Plug*
EV 158	*Union Swivel*
EV 161	*Body Bushing*
EV 165	*Lever Shaft Nut*
EV 166	*Cover Gasket*
EV 167	*Cap Gasket*
EV 172	*Quadrant Latch*
EV 173	*Latch Screw*
EV 175	*Link Pin Cotter*
EV 179	*Check Valve Cap*
EV 180	*Vent Valve*
EV 181	*Follower Cap Nut*
EV 182	*Vent Valve Spring*
EV 183	*Cotter*
EV 184	*Ball Check Valve*
EV 283	*Stud and Nut.*
EV 321	*Lever Shaft*
EV 322	*Slide Valve Lever*
EV 323	*Bolt*
EV 325	*Nut Lock Spring*
EV 430	*Pipe Bracket*
EV 610	*Handle Spring*
EV 627	*Feed Valve Gasket*
QT 3	*Piston Ring*
QT 29	*Union Nut*
QT 30	*Union Swivel*
QT 31	*Union Gasket*

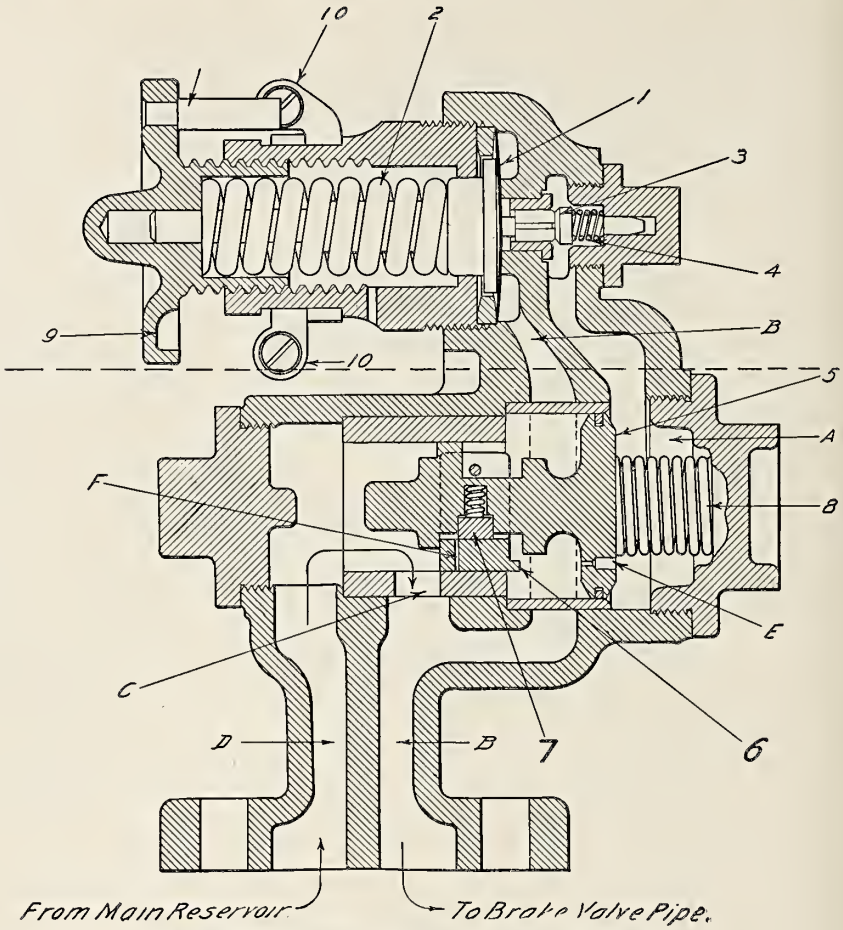

Fig. 1507—Duplex Pressure Controller, Style J2.

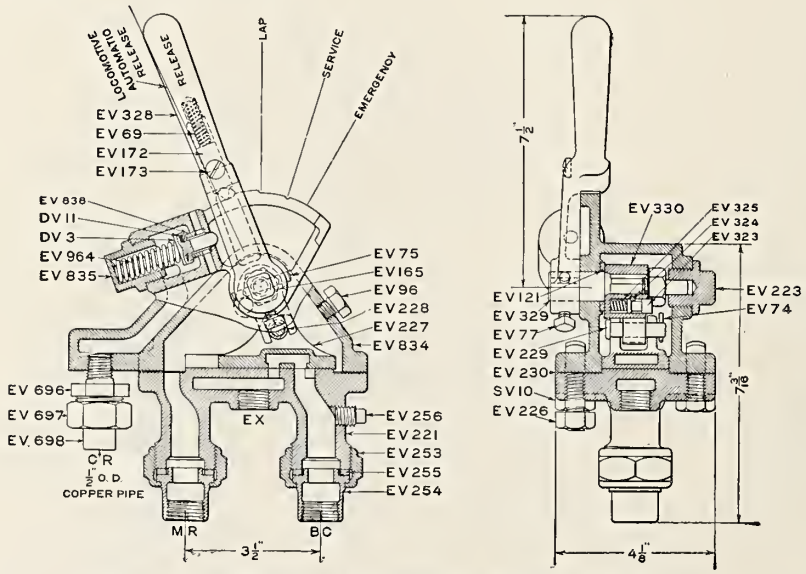

Fig. 1508—Engineer's Combined Straight Air Brake Valve and Release Valve, Style C2.

Names of Parts of Fig. 1508.

EV 69	*Handle Spring*
EV 74	*Cotter*
EV 75	*Handle Pin*
EV 77	*Handle Set Screw*
EV 96	*Oil Plug*
EV 121	*Lever Shaft Packing*
EV 165	*Lever Shaft Nut*
EV 172	*Quadrant Latch*
EV 173	*Latch Screw*
EV 221	*Body*
EV 223	*Lever Shaft Plug*
EV 226	*Bracket Stud and Nut*
EV 227	*Slide Valve*
EV 228	*Slide Valve Thimble*
EV 229	*Slide Valve Pin*
EV 230	*Cover Gasket*
EV 253	*Union Nut*
EV 254	*Union Swivel*
EV 255	*Union Gasket*
EV 256	*Pipe Plug*
EV 323	*Nut Lock Bolt*
EV 325	*Nut Lock Spring*
EV 328	*Handle*
EV 329	*Lever Shaft*
EV 330	*Slide Valve Lever*
EV 696	*Union Stud*
EV 697	*Union Nut*
EV 698	*Union Swivel*
EV 834	*Cover*
EV 835	*Cap*
DV 3	*Release Valve Stem*
DV 11	*Release Valve Gasket*
EV 964	*Release Valve Spring*
SV 10	*Bolts and Nuts*

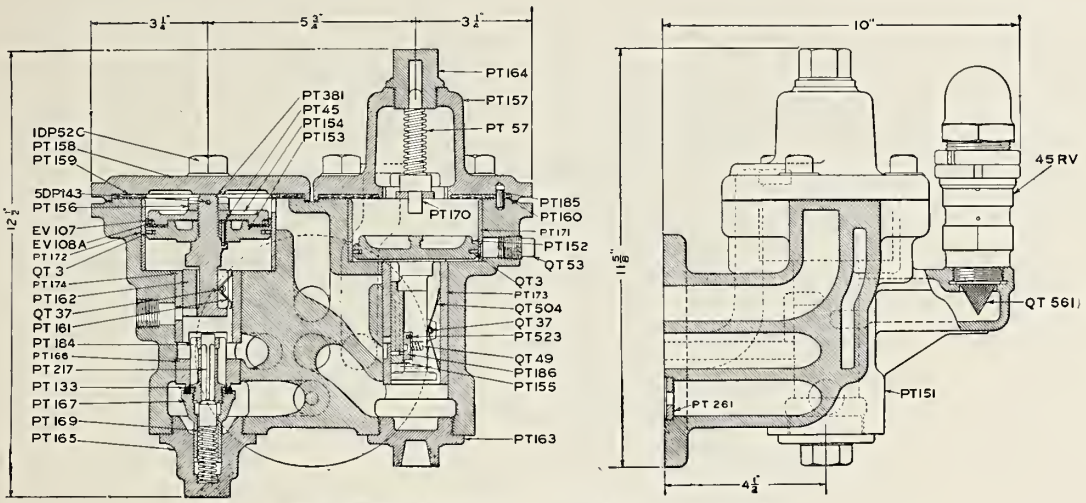

Fig. 1509—Automatic Control Valve, Style L1.

Names of Parts of Fig. 1509.

PT 57	*Graduating Spring*
PT 133	*Check Valve Seat*
PT 151	*Automatic Control Valve Body*
PT 152	*Triple Valve Piston*
PT 153	*Control Piston*
PT 154	*Control Piston Follower*
PT 155	*Triple Slide Valve*
PT 156	*Control Piston Nut*
PT 157	*Triple Valve Cap*
PT 158	*Control Valve Cap*
PT 159	*Control Cylinder Gasket*
PT 160	*Triple Cylinder Gasket*
PT 161	*Exhaust Valve Spring*
PT 162	*Exhaust Valve*
PT 163	*Auxiliary Reservoir Cap*
PT 164	*Graduating Stem Nut*
PT 165	*Main Reservoir Chamber Cap*
PT 167	*Check Valve*
PT 169	*Check Valve Spring*
PT 170	*Graduating Stem*
PT 184	*Check Valve Guide*
PT 185	*Dowel*
PT 186	*Graduating Valve*
PT 217	*Inner Check Valve Guide*
1 DP 52C	*Cap Screws*
5 DP 143	*Cotter Key*
EV 107	*Packing Leather*
EV 108A	*Expander*
QT 3	*Piston Ring*
QT 37	*Slide Valve Pin*
QT 49	*Graduating Valve Spring*
QT 53	*Pipe Plug*
QT 504	*Slide Valve Spring*
QT 561	*Strainer*

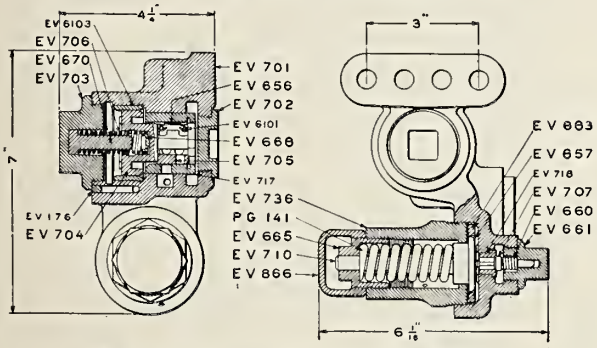

Fig. 1510—Single Pressure Feed Valve.

Names of Parts of Fig 1510.

PG 141	*Regulating Spring*
EV 656	*Supply Valve Spring*
EV 657	*Diaphragm*
EV 660	*Regulating Valve Spring*
EV 661	*Regulating Valve Cap Nut*
EV 663	*Diaphragm Ring*
EV 665	*Regulating Nut*
EV 666	*Check Nut*
EV 668	*Supply Valve Piston Spring Tip*
EV 670	*Cap Nut Stem*
EV 701	*Valve Body*
EV 702	*Flush Nut*
EV 703	*Cap Nut*
EV 704	*Piston*
EV 705	*Supply Valve*
EV 706	*Piston Spring*
EV 707	*Regulating Valve*
EV 710	*Diaphragm Spindle*
EV 736	*Spring Box*

Names of Parts of Figs. 1509-1511.

PT 57	*Graduating Spring*
PT 177	*Emergency Cap*
PT 179	*Graduating Stem*
PT 180	*Emergency Slide Valve*
PT 182	*Cap Nut*
PT 183	*Emergency Head Plug*
PT 221	*Slide Valve Pin*
QT 20	*Rubber Seat*
QT 49	*Graduating Valve Spring*
QT 118A	*Check Valve Spring*
QT 138	*Quick Action Valve*
QT 141	*Check Valve Cap*

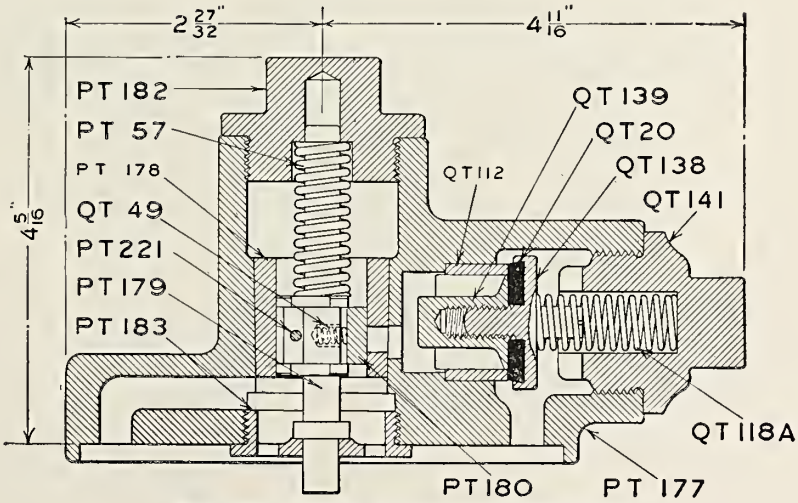

Fig. 1511—Quick Action Cap, Style L2.

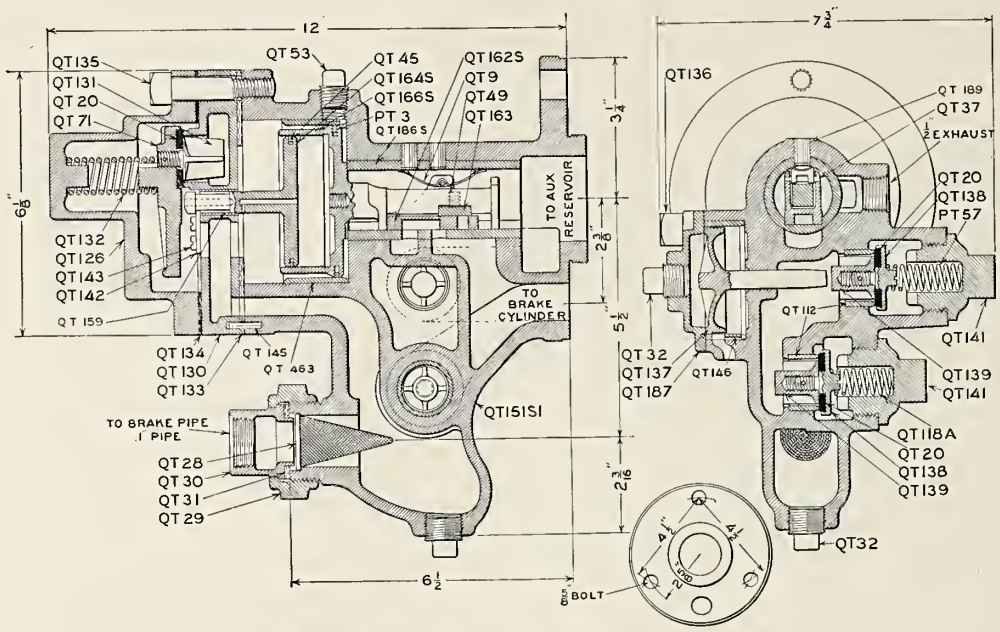

Fig. 1512—Quick Action Triple Valve, Style S1B.

Names of Parts of Fig. 1512.

QT 3	*Main Piston Ring*
QT 9	*Exhaust Valve Spring*
QT 20	*Rubber Valve Seat*
QT 28	*Strainer*
QT 29	*Union Nut*
QT 30	*Union Swivel*
QT 31	*Union Gasket*
QT 32	*Pipe Plug*
QT 37	*Exhaust Valve Pin*
QT 45	*Vent Valve Piston Ring*
QT 49	*Graduating Valve Spring*
QT 53	*Pipe Plug*
QT 69	*Triple Valve Gasket*
QT 71	*Vent Valve*
QT 118A	*Check Valve Spring*
QT 126	*Front Cap*
QT 130	*Vent Valve Seat*
QT 131	*Vent Valve Guide*
QT 132	*Vent Valve Spring*
QT 133	*Main Cylinder Gasket*
QT 134	*Front Cap Gasket*
QT 135	*Front Cap Bolt*
QT 136	*Side Cap Bolt*
QT 137	*Quick Action Valve Piston*
QT 138	*Check Valve*
QT 139	*Check Valve Guide*
QT 141	*Check Valve Cap*
QT 142	*Piston Stop*
QT 143	*Piston Stop Screw*
QT 151SI	*Triple Valve Body*
QT 162S	*Exhaust Valve*
QT 163	*Graduating Valve*
QT 164S	*Vent Valve Piston*
QT 166S	*Main Piston*
QT 187	*Side Cap*
PT 57	*Quick Action Valve Spring*
QT 186S	*Bushing*
QT 463	*Bushing*

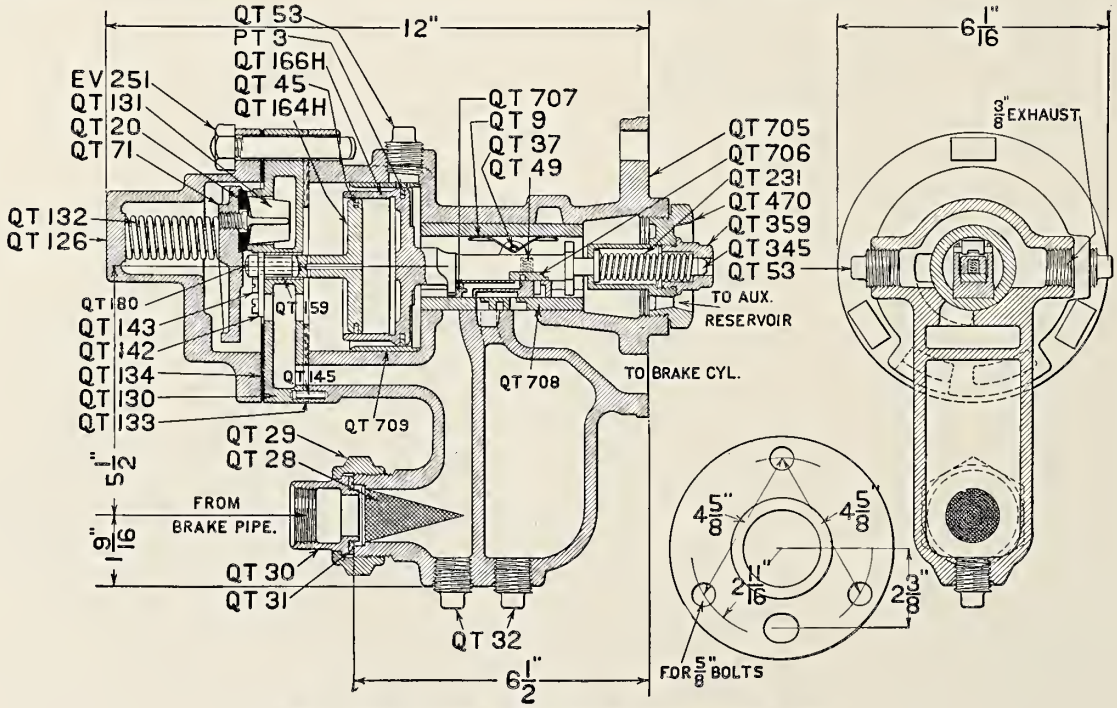

Fig. 1513—Quick Action Triple Valve, Style GN2.

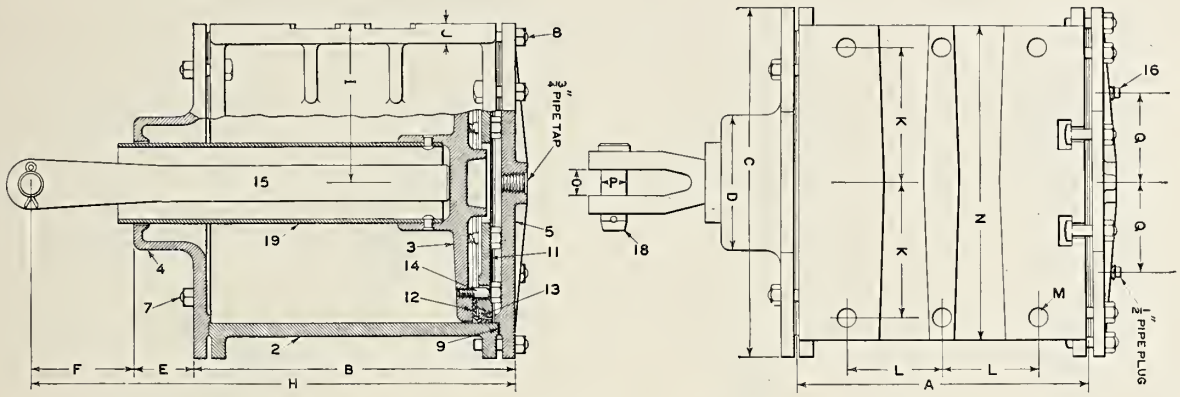

Fig. 1514—Driver Brake Cylinder, Style CO.

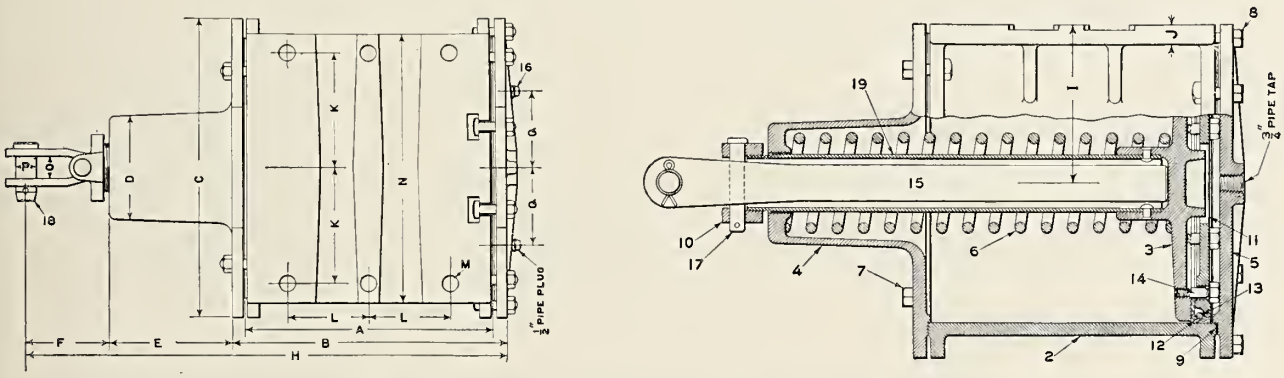

Fig. 1515—Driver Brake Cylinder, Style BO.

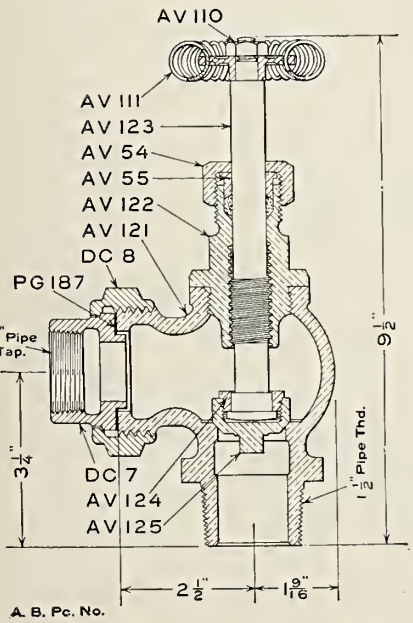

Fig. 1516—Steam Valve, 1¼ in.

Names of Parts of Fig. 1517.

OC 13	*Body*
OC 14	*Cap*

Names of Parts of Fig. 1516.

AV 54	*Packing Nut*
AV 55	*Packing Gland*
AV 110	*Hand Wheel Nut*
AV 111	*Hand Wheel*
AV 121	*Valve Body*
AV 122	*Neck Piece*
AV 123	*Valve Stem*
AV 124	*Valve Nut*
AV 125	*Valve*
AV 164	*Stem and Valve*
DC 7	*Union Swivel*
DC 8	*Union Nut*
PG 187	*Union Gasket*

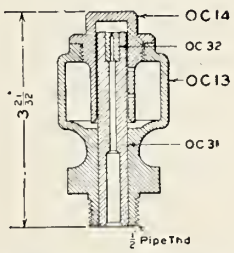

Fig. 1517—Automatic Oil Cup.

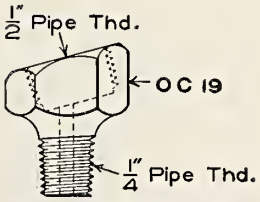

Fig. 1518—Oil Cup Connection for Air Pump.

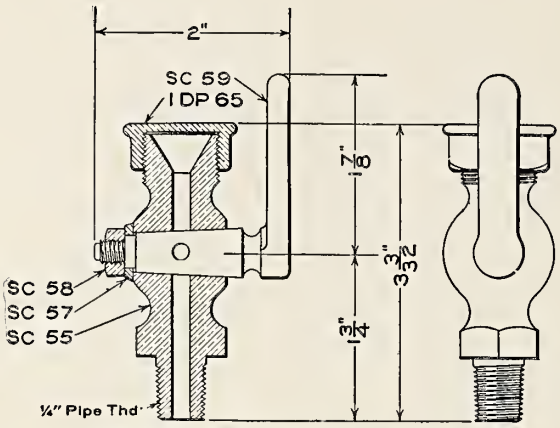

Fig. 1519—Plain Oil Cup, No. 2.

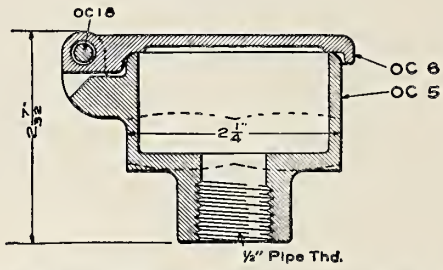

Fig. 1520—Driver Brake Oil Cup, Style B.

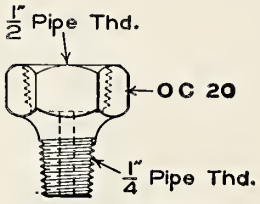

Fig. 1521—Oil Cup Pump. Conection for Air

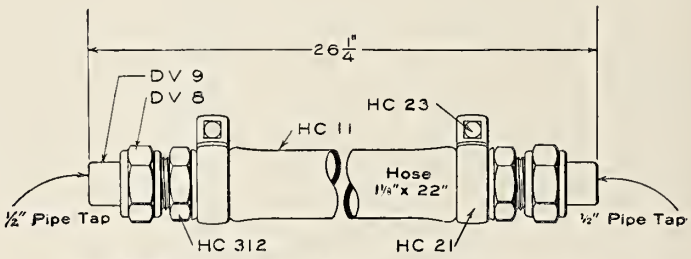

Fig. 1522—Front Truck Hose Connection, ½ in.

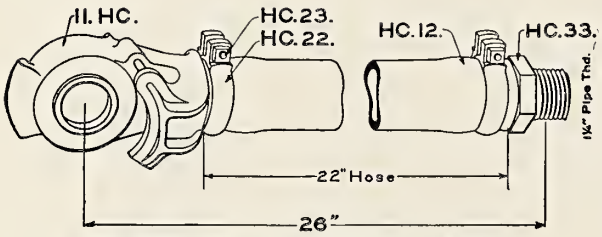

Fig. 1523—Hose and Coupling, 1⅜ in.

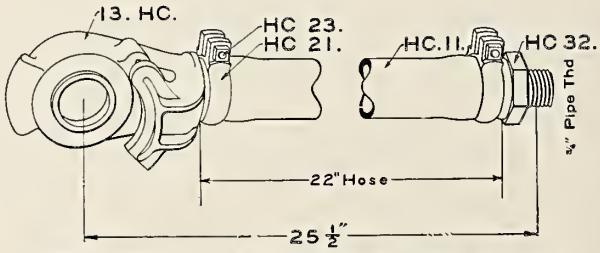

Fig. 1524—Signal Hose and Coupling, 1⅛ in.

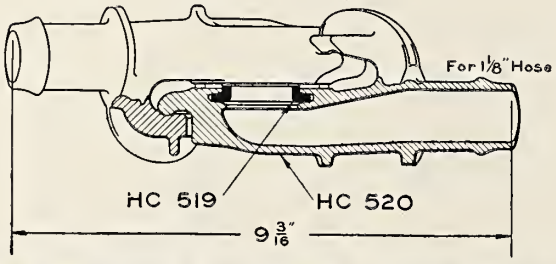

Fig. 1525—Signal Hose Coupling, Packing Ring and Coupling Case.

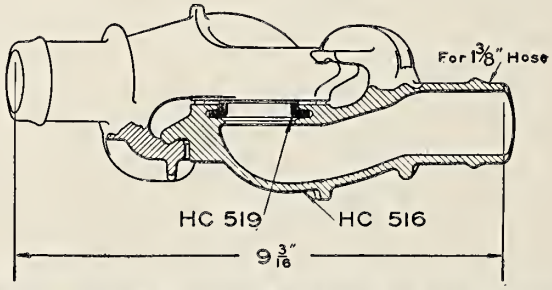

Fig. 1526—Hose Coupling, Packing Ring and Coupling Case.

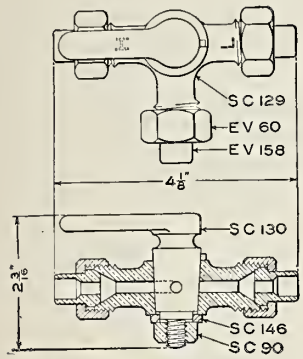

Fig. 1527—Union Three-Way Cock.

Names of Parts of Fig. 1527.

SC 90	*Nut*
SC 129	*Body*
SC 130	*Plug*
SC 146	*Washer*
EV 60	*Small Union Nut*
EV 158	*Union Swivel*

Names of Parts of Fig. 1528.

SC 4	*Spring*
SC 11	*Cap*
SC 155	*Handle*
SC 13	*Handle Pin*
SC 197	*Body*
SC 198	*Plug*

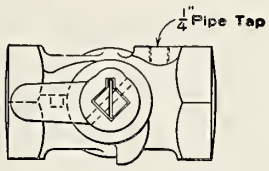

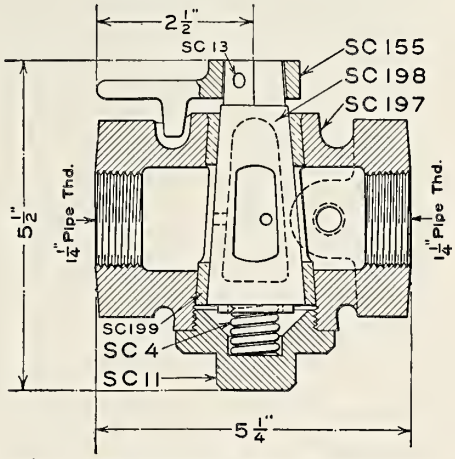

Fig. 1528—1¼-in. Main Reservoir Cut-out Cock.

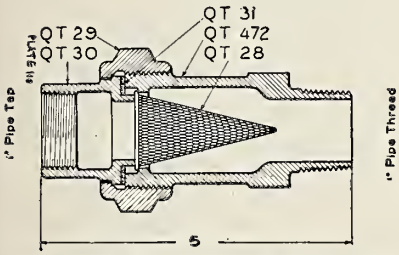

Fig. 1529—Branch Pipe Strainer.

Names of Parts of Fig. 1529.

QT 28	*Strainer*
QT 29	*Union Nut*
QT 30	*Union Swivel*
QT 31	*Union Gasket*
QT 472	*Body*

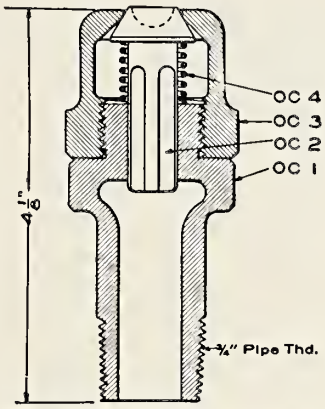

Fig. 1530—Driver Brake Oil Cup, Style A.

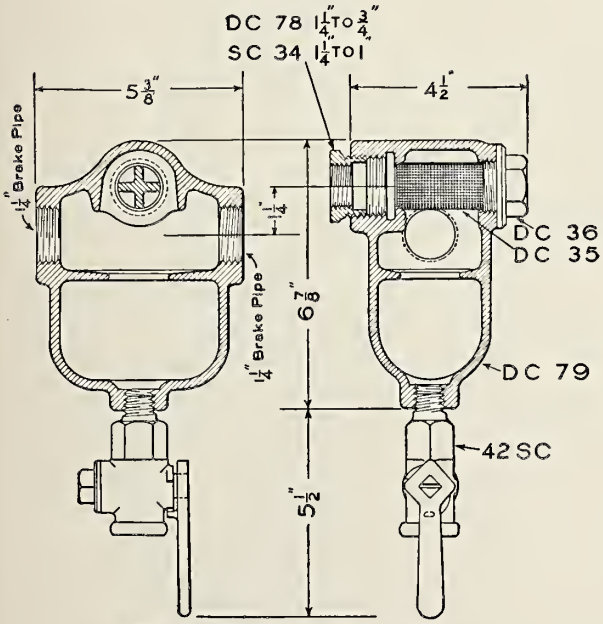

Fig. 1531—Tender Drain Cup.

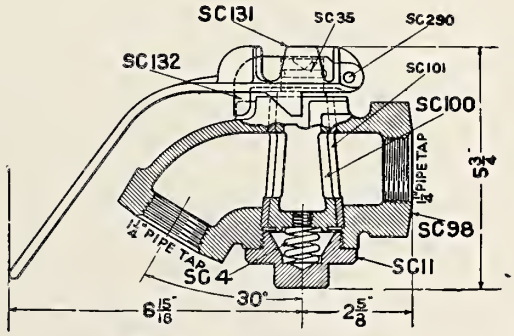

Fig. 1532—Angle Cock.

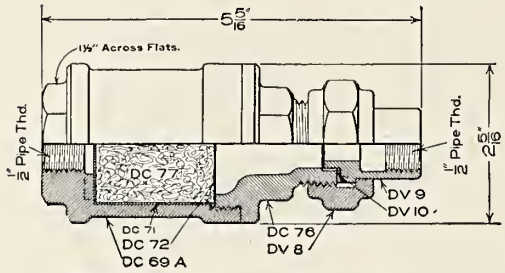

Fig. 1533—Reducing Valve Strainer.

Names of Parts of Fig. 1533.

DC 69A	*Body*
DC 72	*Strainer*
DC 76	*Cap*
DC 77	*Curled Hair*
DV 8	*Union Nut*
DV 9	*Union Swivel*
DV 10	*Union Gasket*

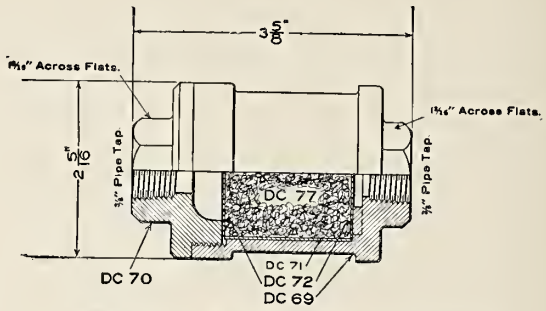

Fig. 1534—Reducing Valve Strainer.

Names of Parts of Fig. 1534.

DC 69	*Body*
DC 70	*Cap*
DC 72	*Strainer*
DC 77	*Curled Hair*

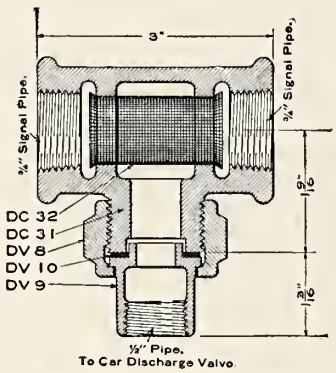

Fig. 1535—Signal Pipe Strainer.

Names of Parts of Fig. 1535.

DC 31	*Body*
DC 32	*Strainer*
DV 8	*Union Nut*
DV 9	*Union Swivel*
DV 10	*Union Gasket*

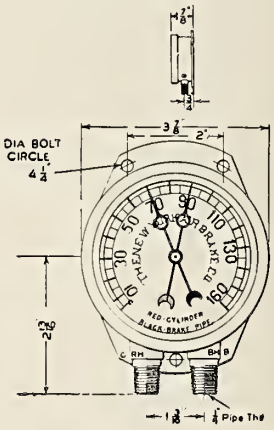

Fig. 1536—3½-inch Duplex Air Gage.

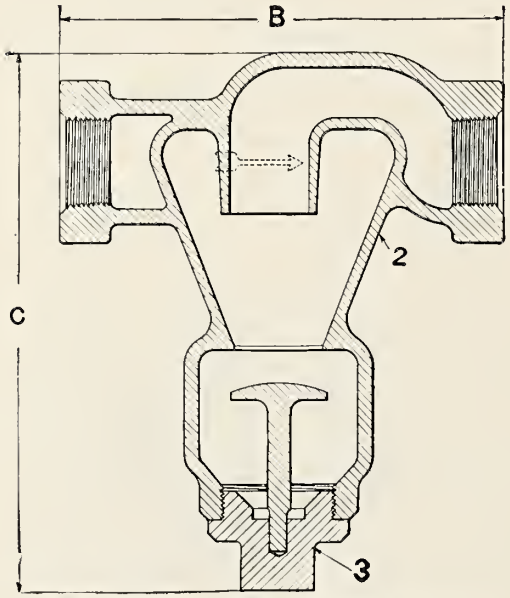

Fig. 1537—Centrifugal Dirt Collector.

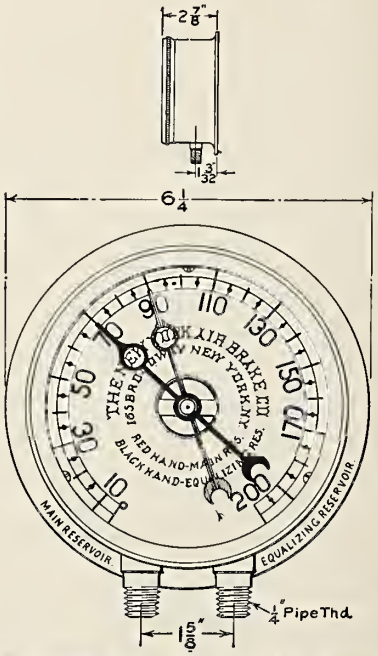

Fig. 1538—5-in. Duplex Air Gage.

Names of Parts of Fig. 1539.

DC 72	*Strainer*
DC 97	*Curled Hair*
DC 119	*Cap Nut*
DC 121	*Dart Union Nut*
DC 122	*Dart Union Swivel*
DC 157	*Check Valve*
DC 158	*Check Valve Stem*
DC 160	*Valve Cap*
DC 162	*Choke Fitting*
DC 183	*Body*
DC 184	*Spring*
DC 185	*Rubber Valve Seat*

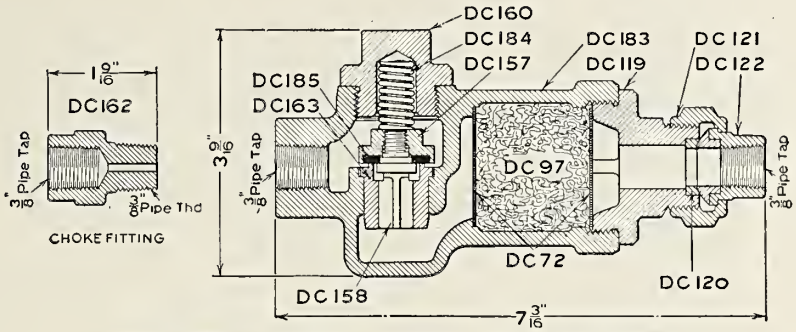

Fig. 1539—Combined Strainer and Check Valve.

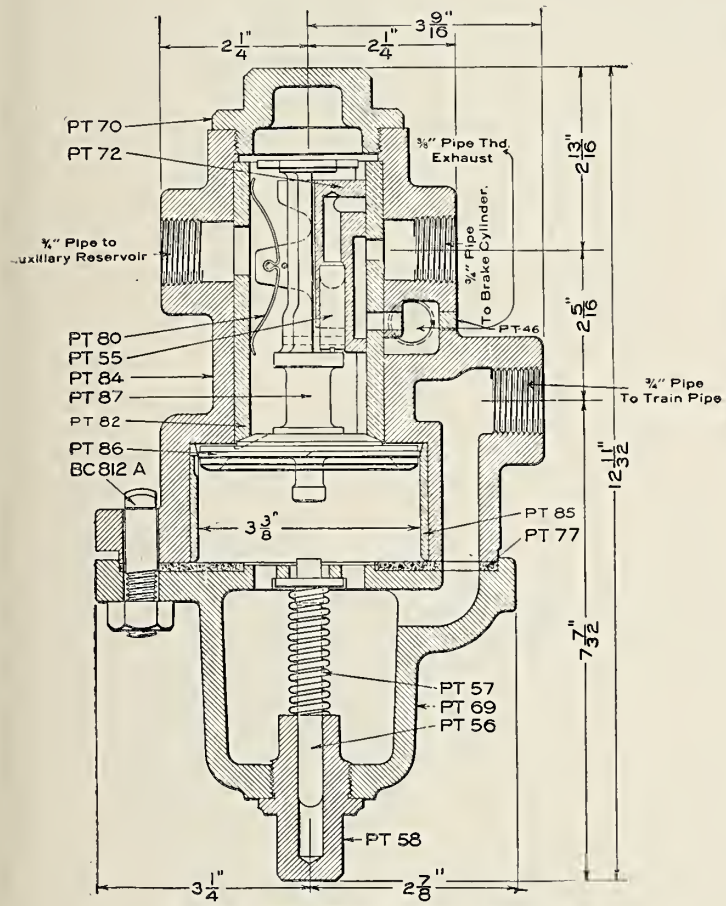

Fig. 1540—Plain Triple Valve.

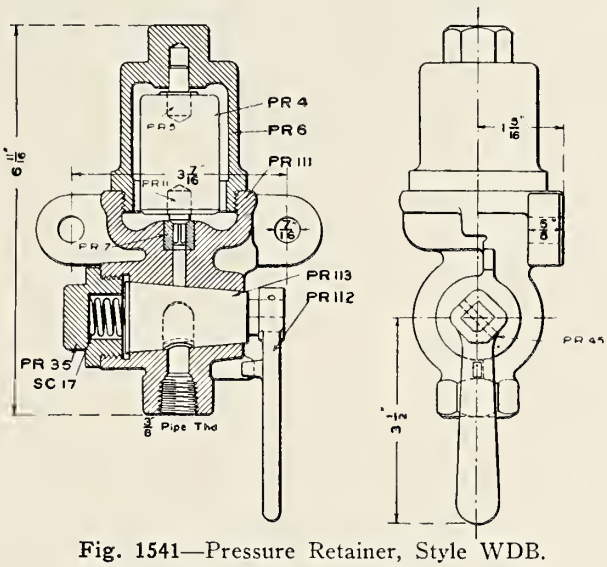

Fig. 1541—Pressure Retainer, Style WDB.

Names of Parts of Fig. 1541.

SC 17	*Spring*	PR 111A	*Body*
PR 35	*Cap*	PR 4	*Weight*
PR 112	*Handle*	PR 6	*Case*
PR 113	*Plug*	PR 45	*Handle Pin*

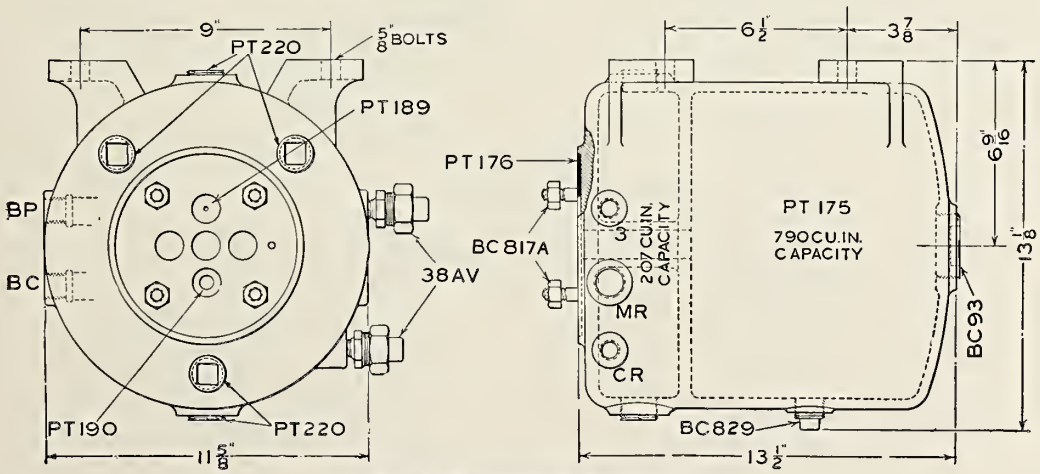

Fig. 1542—Divided Reservoir.

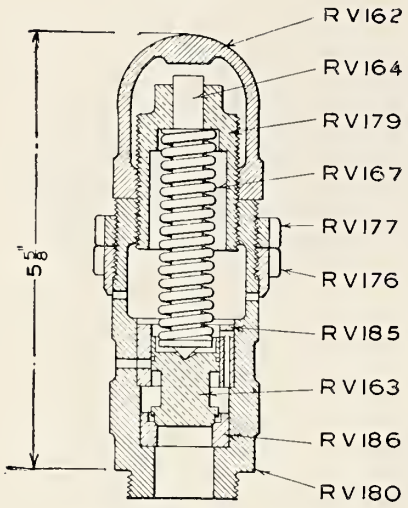

Fig. 1543—Safety Valve.

Names of Parts of Fig. 1543.

RV 162	*Cap Nut.*
RV 163	*Valve*
RV 164	*Valve Stem*
RV 167	*Spring*
RV 176	*Exhaust Ring*
RV 177	*Lock Ring*
RV 179	*Regulating Nut*
RV 180	*Body*

Names of Parts of Fig. 1544.

RV 166	*Spring*
RV 225	*Cap Nut*
RV 228	*Regulating Nut*
RV 229	*Valve Stem*
RV 230	*Body*
RV 231	*Valve*
RV 232	*Valve Seat*

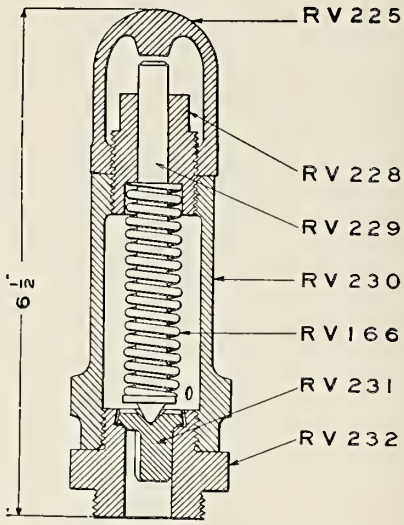

Fig. 1544—Safety Valve.

Names of Parts of Fig. 1545.

RV 135	*Body*	RV 142	*Piston*
RV 136	*Cap*	RV 144	*Nut*
RV 138	*Spring*	QT 39	*Cotter*
RV 139	*Guide*	EV 253	*Union Nut*
RV 140	*Seat*	EV 254	*Union Swivel*
RV 141	*Valve*	EV 255	*Union Gasket*

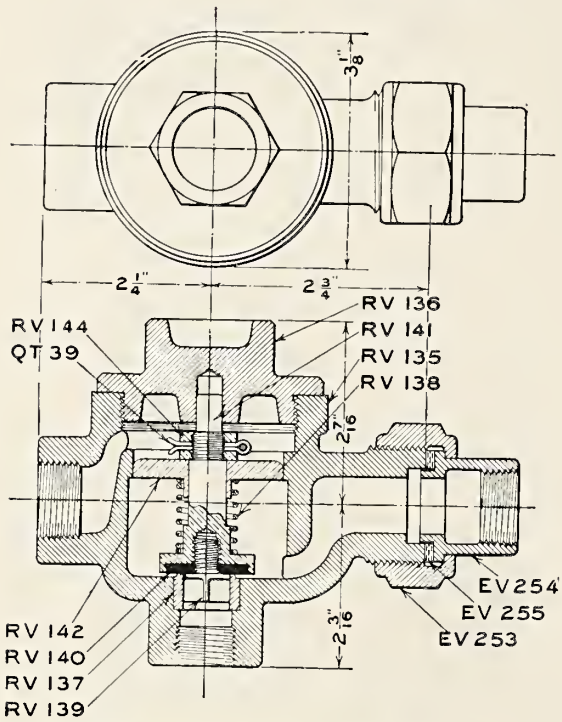

Fig. 1545—Quick Release Valve.

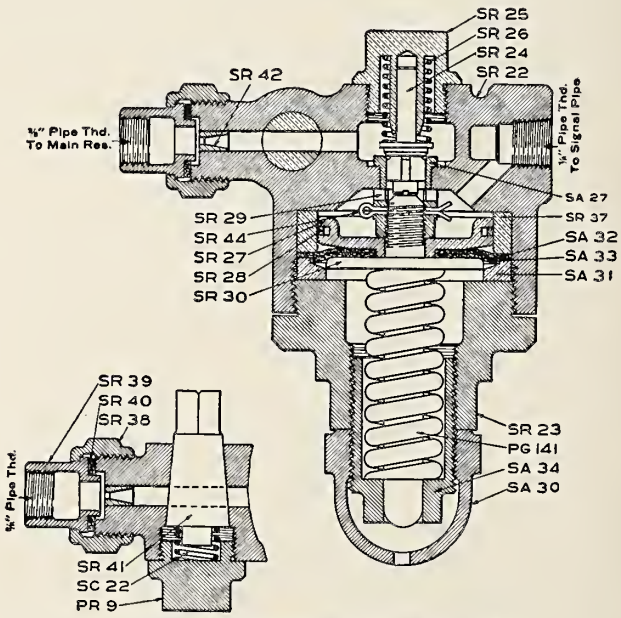

Fig. 1546—Reducing Valve, Style B.

Names of Parts of Fig. 1546.

SR 22	*Body*	SR 41	*Cock Plug*
SR 23	*Spring Box*	SR 42	*Choke*
SR 24	*Supply Valve*	SR 44	*Cotter*
SR 25	*Supply Valve Cap*	SA 30	*Check Nut*
SR 26	*Supply Valve Spring*	SA 31	*Diaphragm Ring*
SR 27	*Piston*	SA 32	*Diaphragm*
SR 28	*Piston Ring*	SA 33	*Diaphragm Shield*
SR 29	*Piston Nut*	SA 34	*Regulating Nut*
SR 30	*Piston Rod*	SC 22	*Cock Spring*
SR 38	*Union Nut*	PG 141	*Regulating Spring*
SR 39	*Union Swivel*	PR 9	*Cock Cap Nut*
SR 40	*Union Gasket*		

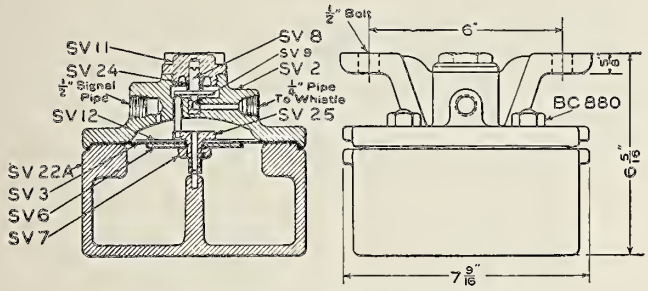

Fig. 1547—Signal Valve, Style BA.

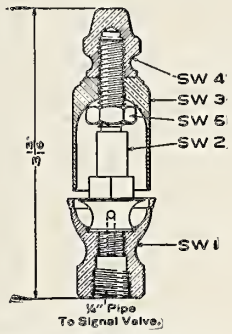

Fig. 1548—Signal Whistle, Style A.

Names of Parts of Fig. 1547.

SV 2	*Upper Case*
SV 3	*Diaphragm*
SV 6	*Lower Diaphragm Plate*
SV 7	*Nut*
SV 8	*Valve*
SV 11	*Cap*
SV 12	*Upper Diaphragm Washer*
SV 22A	*Lower Case*
SV 24	*Spring*
SV 25	*Diaphragm Stem*
BC 880	*Stud and Nut*

Names of Parts of Fig. 1548.

SW 1	*Body*
SW 2	*Stem*
SW 3	*Bell*
SW 4	*Cap Nut*
SW 5	*Lock Nut*

Names of Parts of Fig. 1550.

HS 11	*Regulating Spring*
HS 12	*Regulating Nut*
HS 13A	*Check Nut*
HS 14A	*Union Stud*
HS 15	*Union Swivel*
HS 17	*Union Strainer*
HS 19	*Tee Head Bolt*
HS 22	*Spring Abutment*
HS 24	*Street Ell*
HS 76A	*Spring Box*
HS 80	*Leather Washer*
HS 92	*Body*
HS 93	*Bracket*
HS 97	*Diaphragm*
HS 98	*Diaphragm Washer*
HS 99	*Bracket Stud*
HS 100	*Piston*
HS 101	*Top Piston Nut*
HS 102	*Piston Disc*
HS 103	*Bottom Piston Nut*
HS 104	*Rider Pin*
HS 111	*Plug*
HS 113	*Holding Nut*
HS 252	*Cotter*
PT 60	*Packing Ring*
QT 29	*Union Nut*
QT 31	*Union Gasket*
HS 31A	*Spring Box Bush*
HS 96	*Piston Bush*

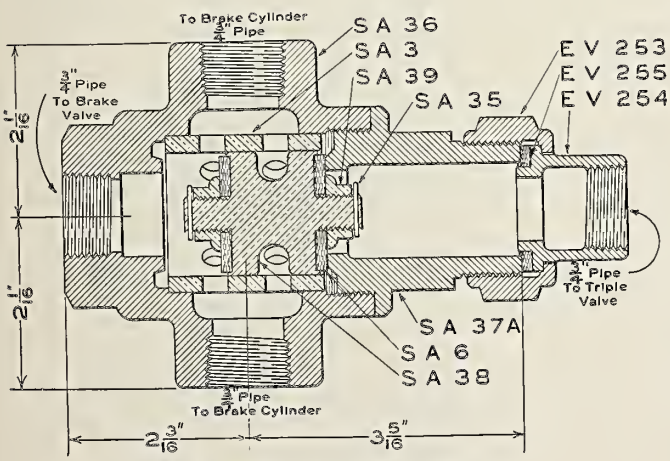

Fig. 1549—Double Check Valve.

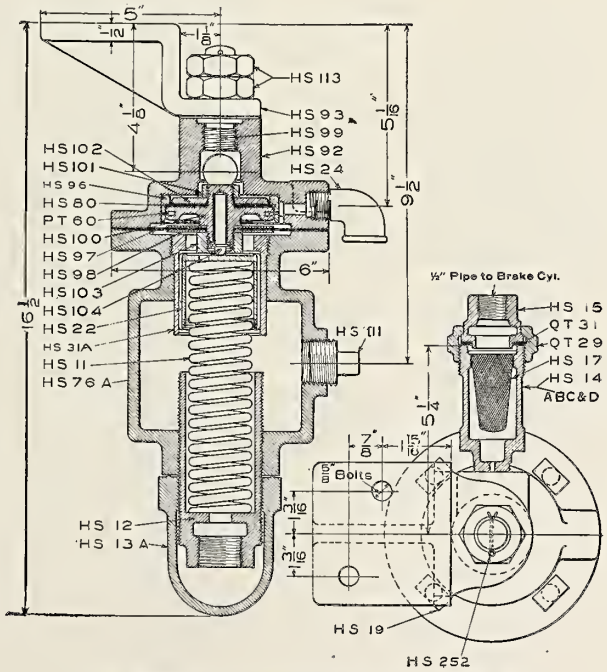

Fig. 1550—Compensating Valve, Style B1.

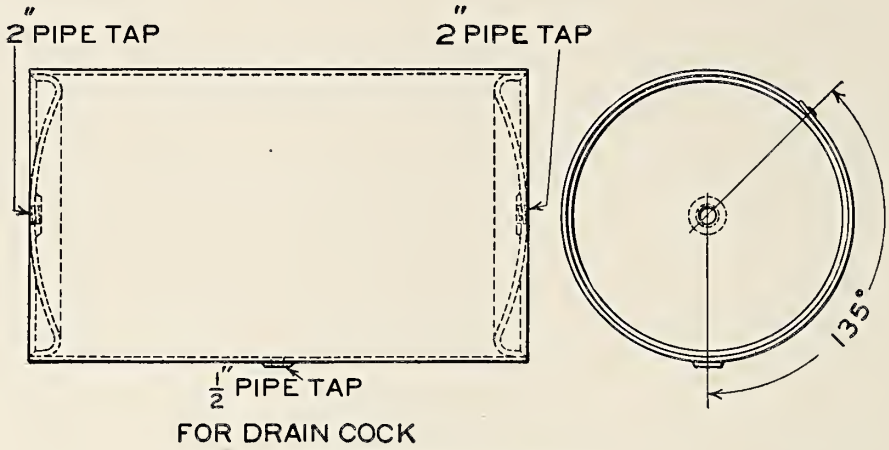

Fig. 1551—Main Reservoir.

Names of Parts of Fig. 1552.

RV 29	*Rivet*
RV 35	*Handle*
RV 205	*Body*
RV 206	*Cap (bushed)*
RV 207	*Valve*
RV 207C	*Valve*
RV 208	*Valve Guide*
RV 220	*Spring*
QT 20	*Rubber Seat*

Names of Parts of Fig. 1553.

VV 1	*Upper Case*
VV 2	*Upper Case Cap Nut*
VV 3	*Lower Case*
VV 4	*Post*
VV 6	*Piston*
VV 8	*Valve*
VV 9	*Lower Case Gasket*
VV 10	*Lifting Pins*
VV 11	*Stud*
VV 12	*Holding Nut*
VV 13	*Bracket*
PT 57	*Valve Spring*
QT 28	*Strainer*
QT 29	*Union Nut*
QT 30	*Union Swivel*
QT 31	*Union Gasket*
QT 557	*Valve Seat*
QT 574	*Piston Ring*
SV 10	*Tee Head Bolt and Nut*

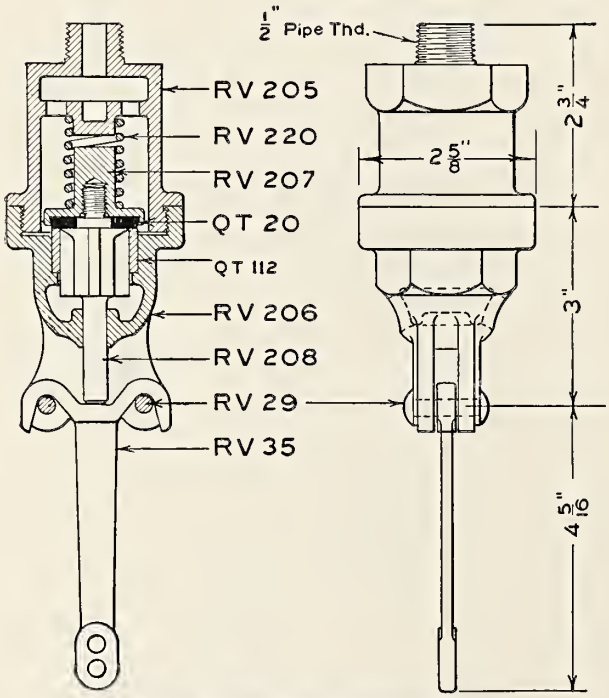

Fig. 1552—Lever Release Valve.

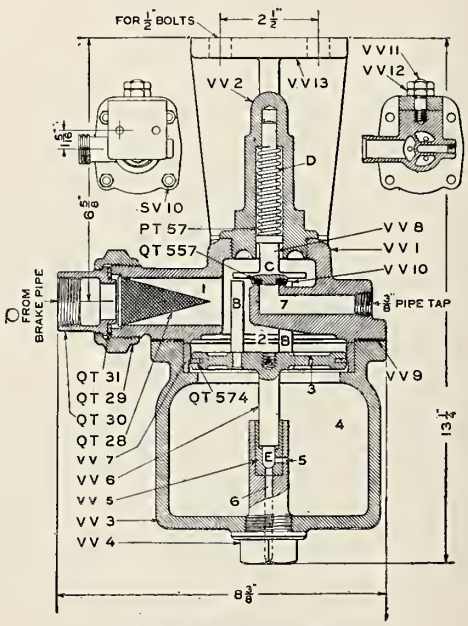

Fig. 1553—Vent Valve.

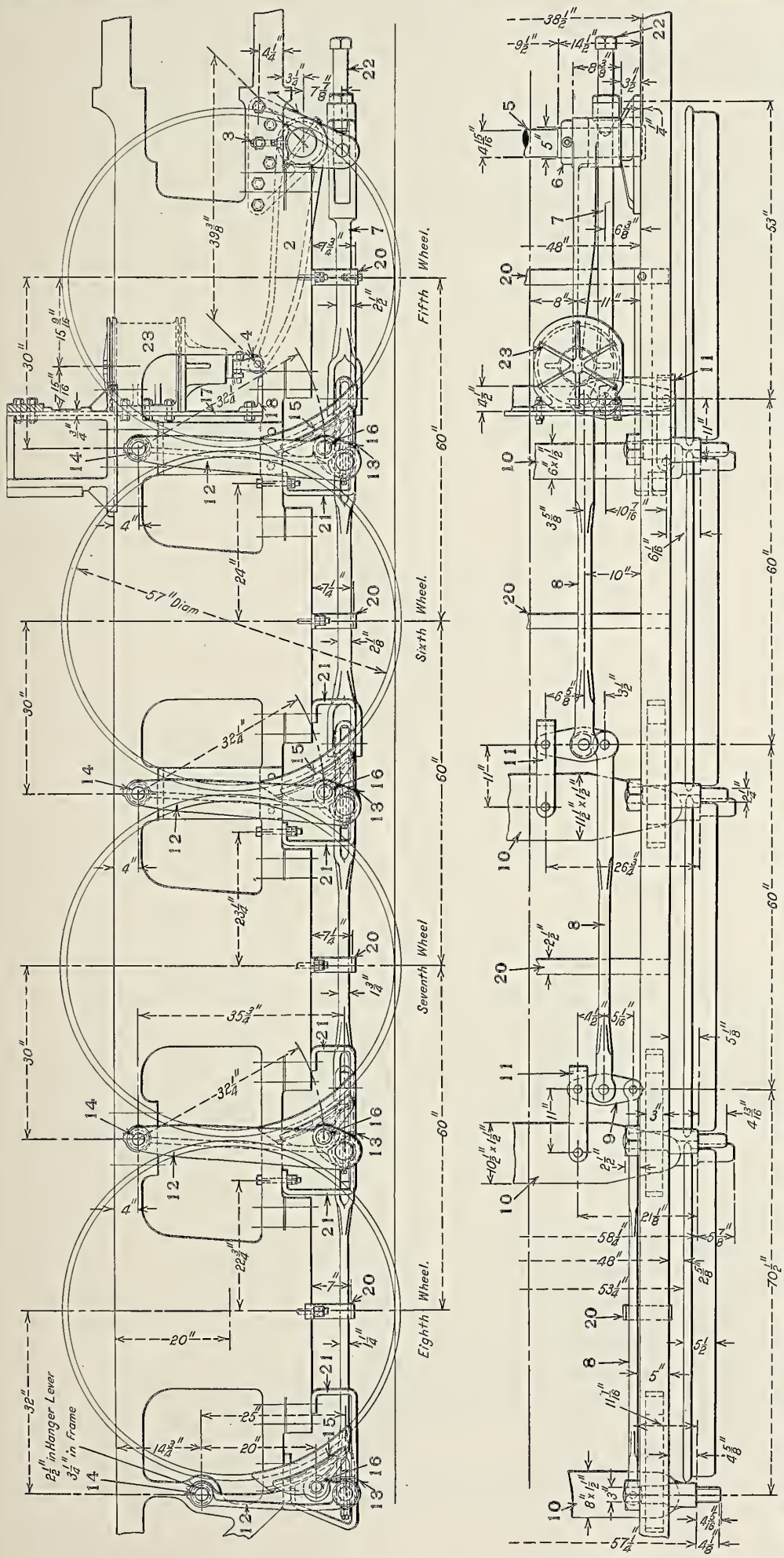

Fig. 1554—Foundation Driver Brake Gear for Mallet Locomotive. Rear Unit Shown with Brakes on Back of Drivers. Brakes are Applied to Front of Drivers on the Leading Unit; American Brake Company.

Names of Parts of Fig. 1554.

1 *Bellcrank Bracket*
2 *Bellcrank*
3 *Oil Cup*
4 *Cylinder Push Rod*
5 *Bellcrank Shaft*
6 *Bellcrank Shaft Collar*
7 *Slack Adjuster Pull Rod*
8 *Pull Rod*
9 *Equalizer*
10 *Brake Beam*
11 *Brake Beam Strap Link*
12 *Hanger Lever*
13 *Balance Spring*
14 *Hanger Pin*
15 *Brake Head*
16 *Brake Head Pin*
17 *Cylinder Support Plate*
18 *Cylinder Support Angle*
20 *Rod Support*
21 *Beam Support*
22 *Slack Adjuster*
23 *Brake Cylinder*

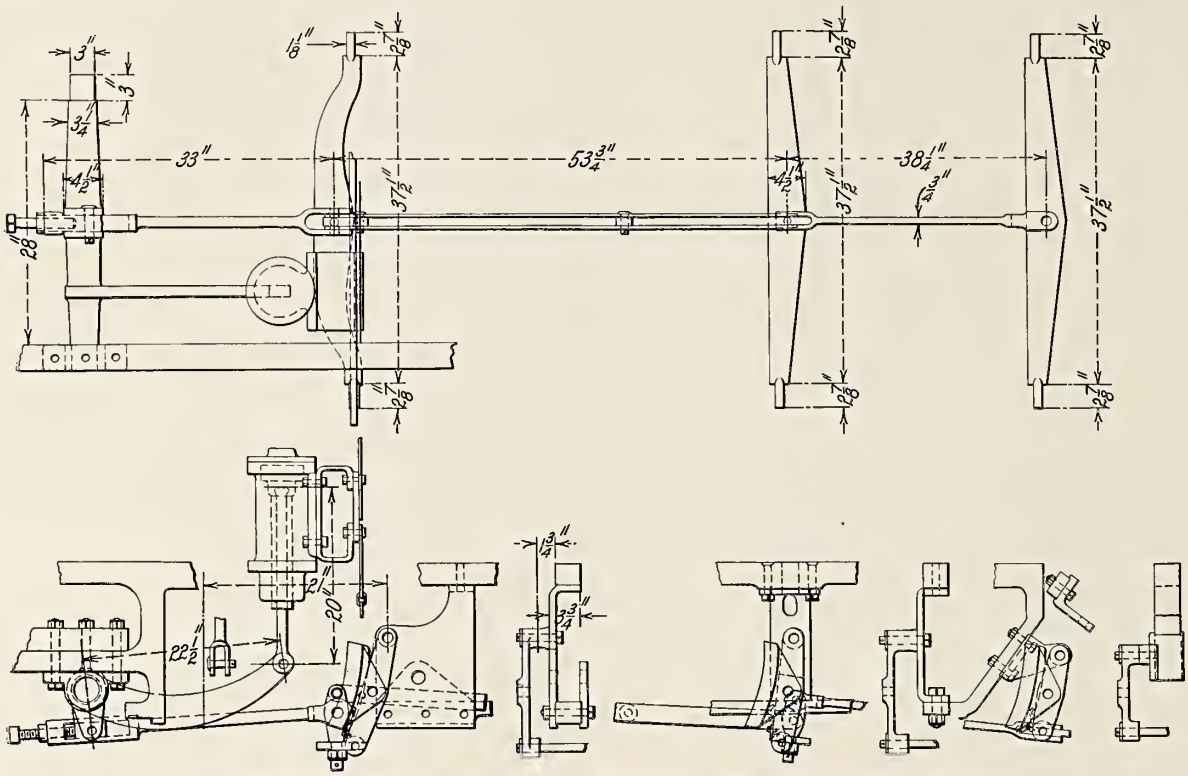

Fig. 1555—Baldwin Equalized Steam Brake; Baldwin Locomotive Works.

Names of Parts of Fig. 1556.

1 *Cylinder Support*	6 *Strap Link*	11 *Brake Head*
2 *Live Lever*	7 *Push Rod*	12 *Brake Shoe*
3 *Dead Lever*	8 *Hanger*	13 *Christie Key*
4 *Live Equalizer*	9 *Push Rod Support*	14 *Brake Cylinder*
5 *Dead Equalizer*	10 *Tie Rod*	

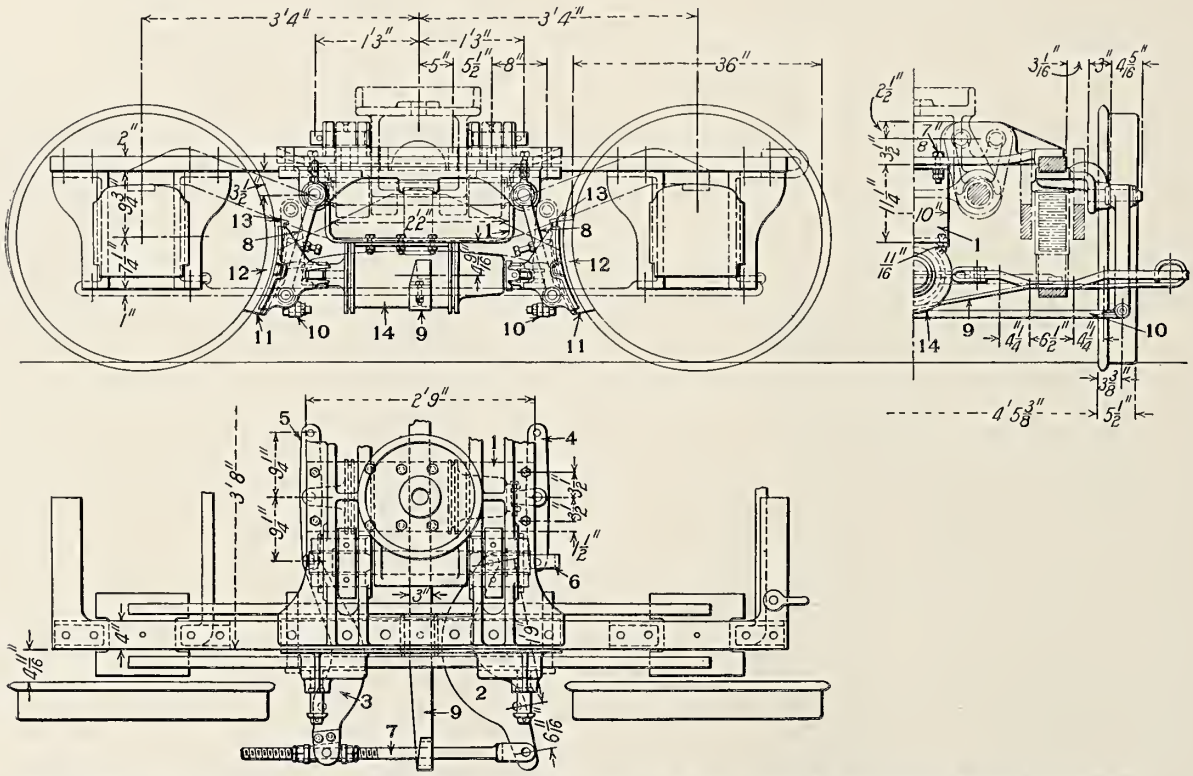

Fig. 1556—Foundation Brake Gear, Style WD for Front Engine Truck; American Brake Company.

Names of Parts of Figs. 1558-1559.

1 *Cylinder Support*
2 *Fulcrum Bracket*
3 *Cylinder Lever*
4 *Shaft with Collar*
5 *Main Pull Rod*
6 *Slack Adjuster*
7 *Back Pull Rod*
8 *Equalizer*
9 *Brake Beam*
10 *Hanger Lever*
11 *Rod Support*
12 *Brake Head*
13 *Brake Shoe*
14 *Balance Spring*
15 *Supporting Link*
16 *Supporting Link Bracket*
17 *Brake Cylinder*
18 *Push Bar*
19 *Tie Rod*
20 *Push Bar Guide*

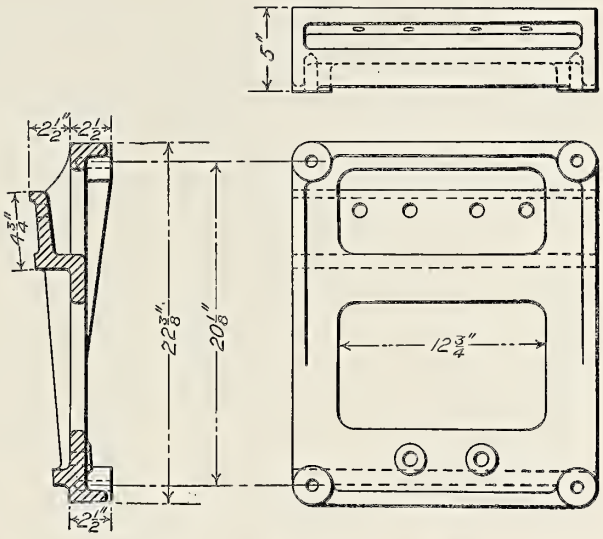

Fig. 1557—Air Pump Bracket for Atlantic Type (4-4-2) Locomotive; Pennsylvania Railroad.

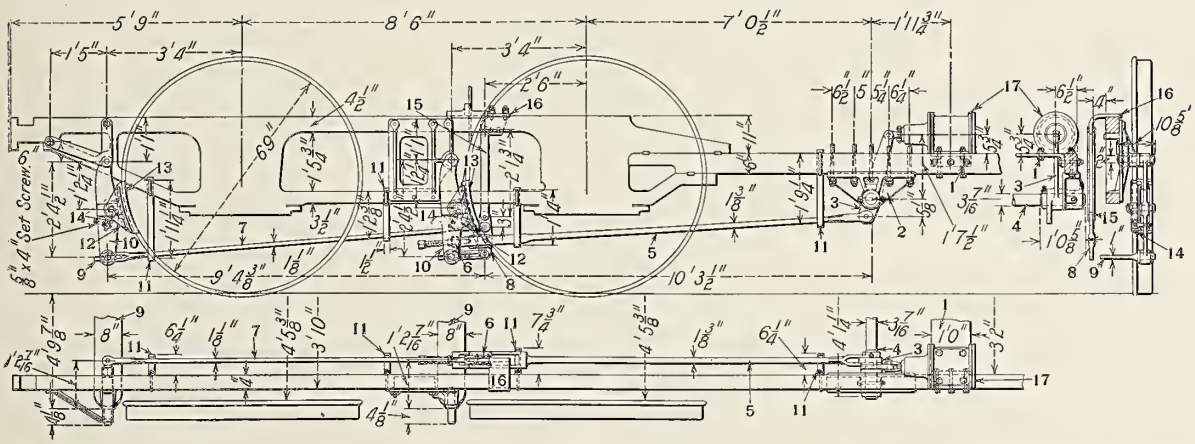

Fig. 1558—Foundation Driver Brake Gear, Style WY, Showing Brakes Applied to Back of Drivers; American Brake Company.

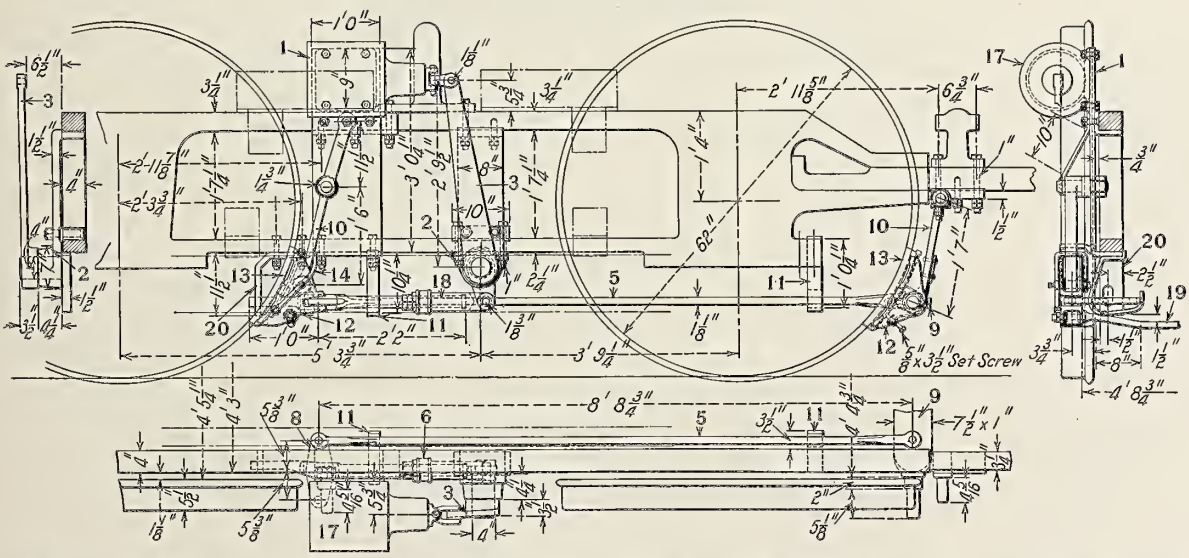

Fig. 1559—Foundation Driver Brake Gear, Style WY-1, Showing Brakes Applied to Front of Drivers; American Brake Company.

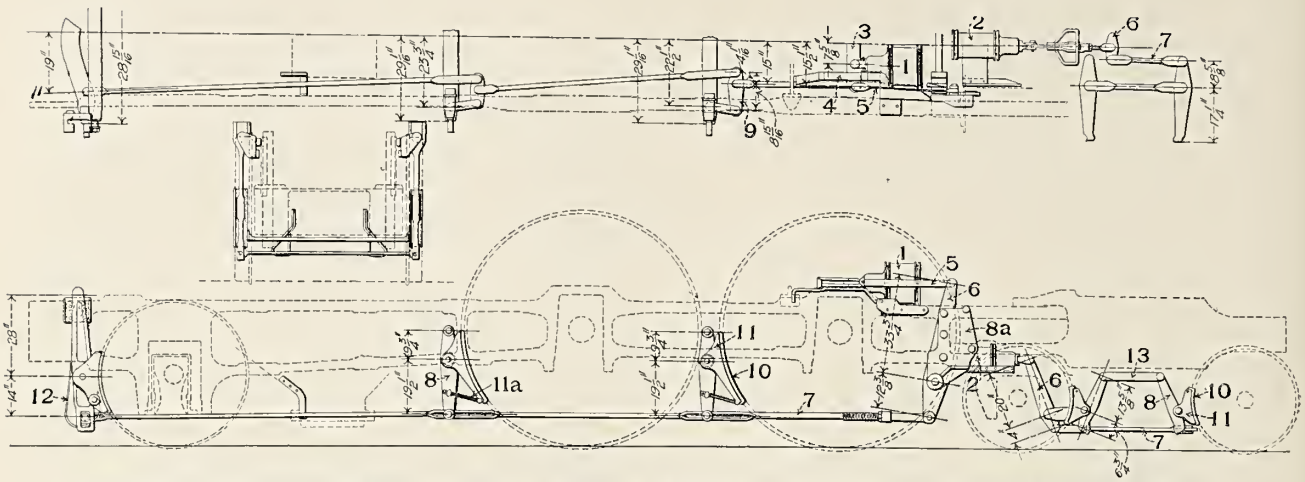

Fig. 1560—Foundation Brake Gear for Atlantic Type (4-4-2) Locomotive; Pennsylvania Railroad.

Numbers on Fig. 1560 Refer to Names of Parts on Page 619.

Names of Parts of Slack Adjuster, Fig. 1561.

1 *Union Elbow*
2 *Union Nut*
3 *Union Gasket*
4 *Cylinder*
5 *Piston*
6 *Follower Nut*
7 *Follower*
8 *Packing Leather*
9 *Expanding Ring*
10 *Pawl Spring Pin*
11 *Pawl Spring*
12 *Pawl*
13 *Pawl Pin*
14 *Piston Spring*
15 *Casing Bolt and Nut*
16 *Ratchet Nut*
17 *Bronze Nut*
18 *Dowel Pin*
19 *Stop Screw*
20 *Casing*
21 *Check Pawl*
22 *Check Pawl Pivot*
23 *Adjuster Body*
24 *Crosshead Pin Cap*
25 *Crosshead Pin*
26 *Crosshead*
27 *Crosshead Rivet*
28 *Adjuster Screw*
29 *Brass Washer*
30 *Cylinder Bolt and Nut*
31 *Union Stud*
32 *Pipe Nipple*
33 *Union Elbow*
34 *Union Nut*
35 *Union Gasket*
36 *Cylinder Stud*
37 *Union Elbow*
38 *Union Nut*
39 *Union Gasket*

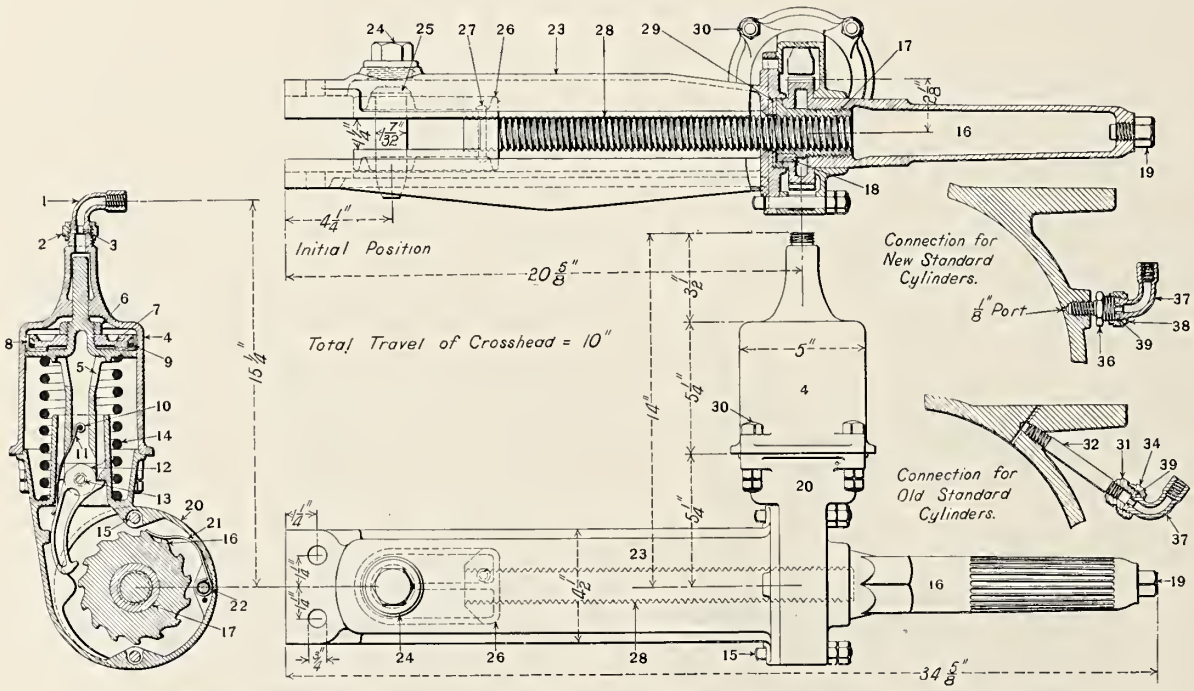

Fig. 1561—American Automatic Slack Adjuster, Form J; American Brake Company.

Names of Parts of Fig. 1560.

1 *Driver Brake Cylinder*
2 *Truck Brake Cylinder*
3 *Cylinder Equalizer*
4 *Cylinder Equalizer Guide*
5 *Cylinder Pull Rod*
6 *Cylinder Brake Lever*
7 *Pull Rod*
8 *Brake Lever*
8a *Brake Lever Fulcrum*
9 *Equalizer*
10 *Brake Shoe*
11 *Brake Head*
11a *Brake Head Adjusting Spring*
12 *Retracting Spring*
13 *Brake Lever Coupling Rod*

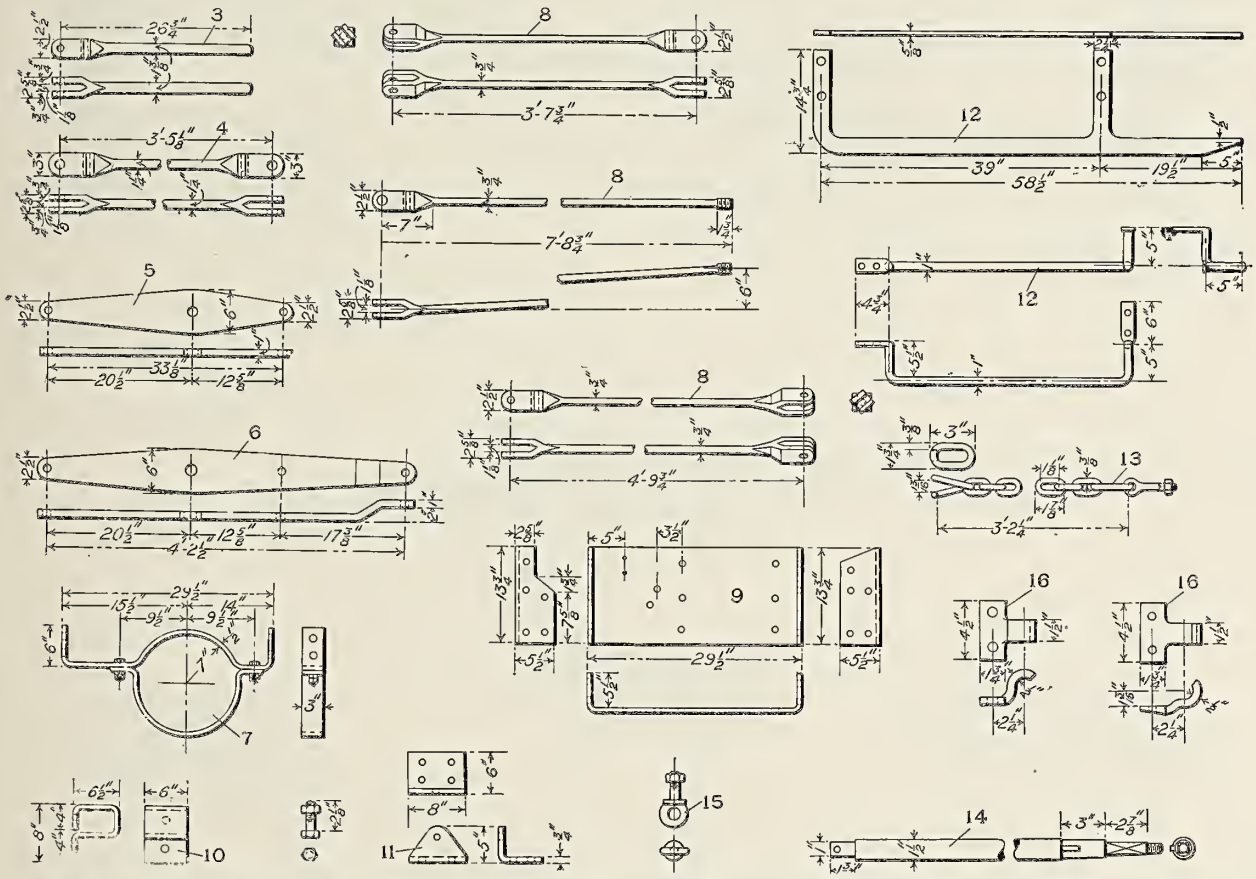

Fig. 1562—Forged Details of Foundation Brake Gear for Tender of Atlantic Type (4-4-2) Locomotive; Pennsylvania Railroad.

Names of Parts of Fig. 1562.

3 *Brake Cylinder Push Rod*
4 *Cylinder Lever Connecting Rod*
5 *Dead Cylinder Lever*
6 *Live Cylinder Lever*
7 *Auxiliary Reservoir Support*
8 *Brake Rods*
9 *Cylinder Support*
10 *Chain Guard*
11 *Brake Mast Foot Step*
12 *Lever Guide*
13 *Brake Chain*
14 *Brake Mast or Shaft*
15 *Brake Chain Eye*
16 *Pipe Clamp*

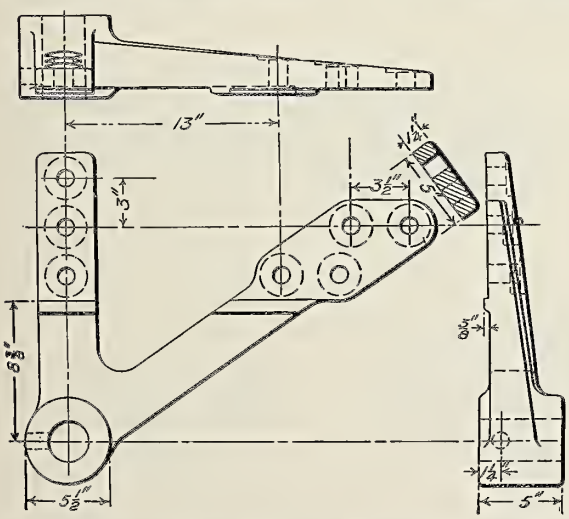

Fig. 1563—Fulcrum for Driver Brake Lever on Atlantic Type (4-4-2) Locomotive; Pennsylvania Railroad.

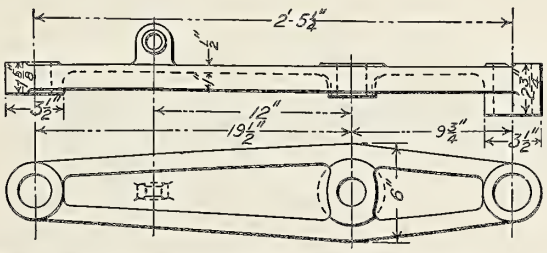

Fig. 1564—Driver Brake Lever for Atlantic Type (4-4-2) Locomotive; Pennsylvania Railroad.

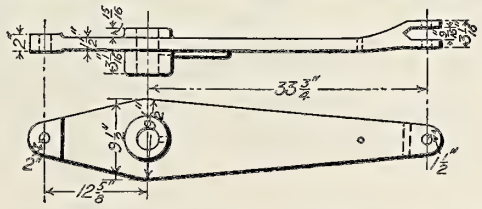

Fig. 1565—Driver Brake Cylinder Lever for Atlantic Type (4-4-2) Locomotive; Pennsylvania Railroad.

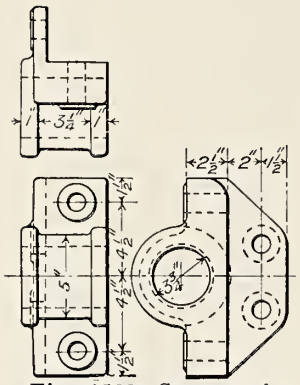

Fig. 1566—Support for Drive Brake Lever Fulcrum.

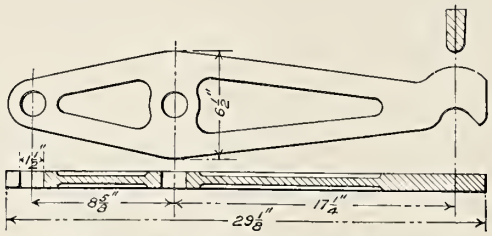

Fig. 1567—Truck Brake Lever.

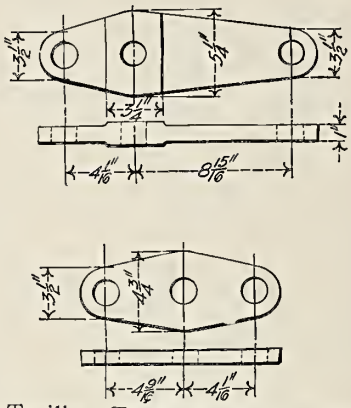

Fig. 1568—Trailing Truck Brake Equalizers.

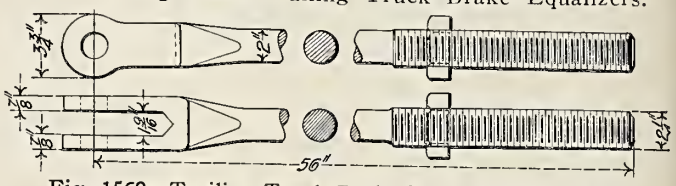

Fig. 1569—Trailing Truck Brake Rod with Screw End.

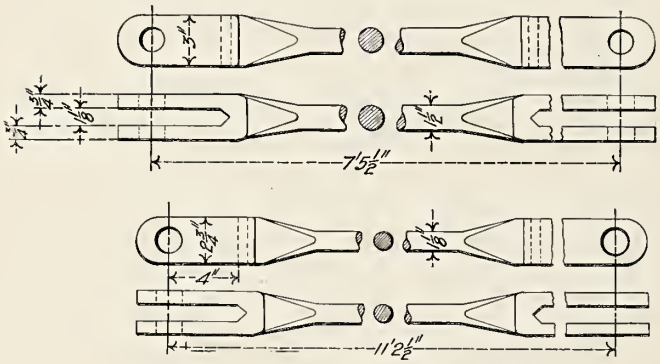

Fig. 1570—Trailing Truck Brake Rods.

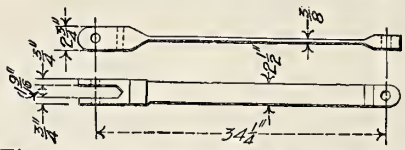

Fig. 1571—Trailing Truck Cylinder Lever Connecting Rod.

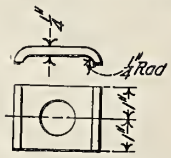

Fig. 1572—Clamp for Trailing Truck Brake Head.

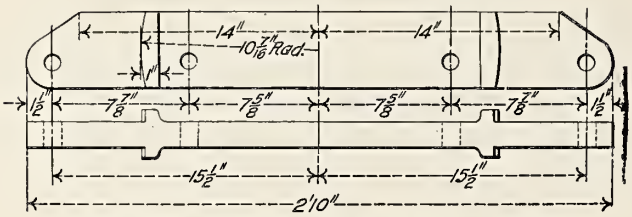

Fig. 1573—Trailing Truck Cylinder Beam.

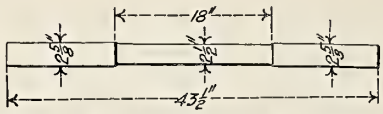

Fig. 1574—Trailing Truck Cylinder Lever Shaft.

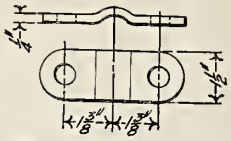

Fig. 1575—Clamp for Trailing Truck Brake Head.

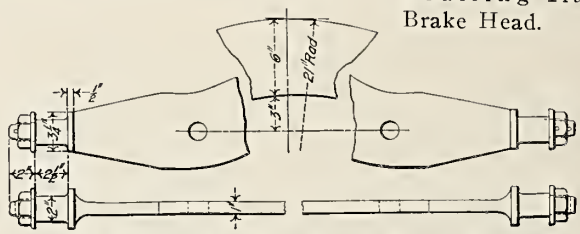

Fig. 1576—Trailing Truck Brake Beam.

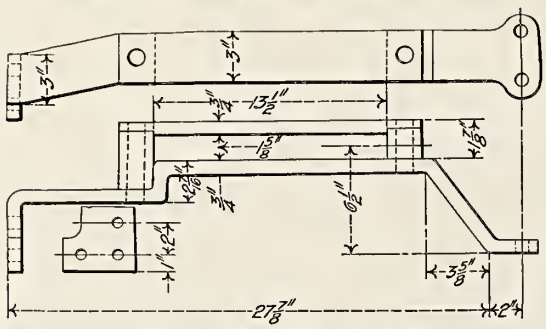

Fig. 1577—Trailing Truck Cylinder Beam Guide.

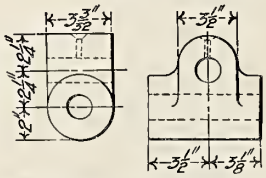

Fig. 1578 — Support for Trailing Truck Brake Head Hangers.

Fig. 1579 — Washer for Trailing Truck Brake Head Clamp.

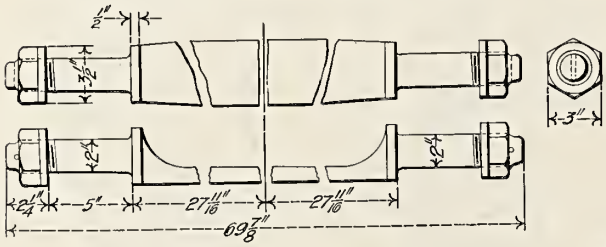

Fig. 1580—Trailing Truck Brake Beam.

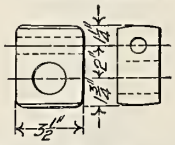

Fig. 1581—Washer for Trailing Truck Brake Beam.

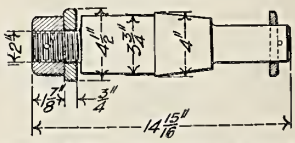

Fig. 1582—Trailing Truck Braker Hanger Pin.

Figs. 1566-1582 are Details of Foundation Brake Gear for Atlantic Type (4-4-2) Locomotive; Pennsylvania Railroad.

Fig. 1583—Brake Lever Pin.

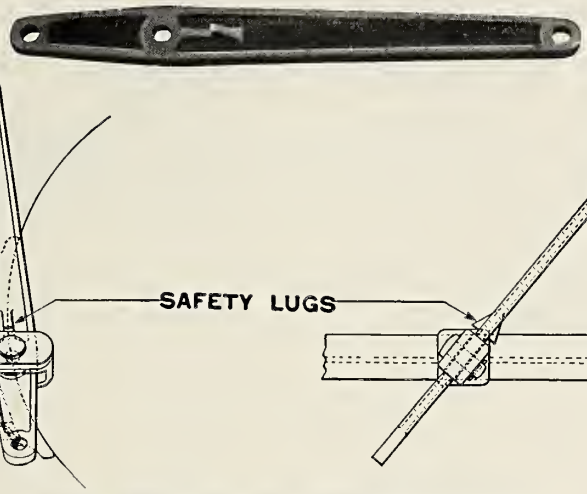

Fig. 1584—National Safety Brake Lever.

Fig. 1585—Brake Lever Pin.

Fig. 1586—Cylinder Lever.

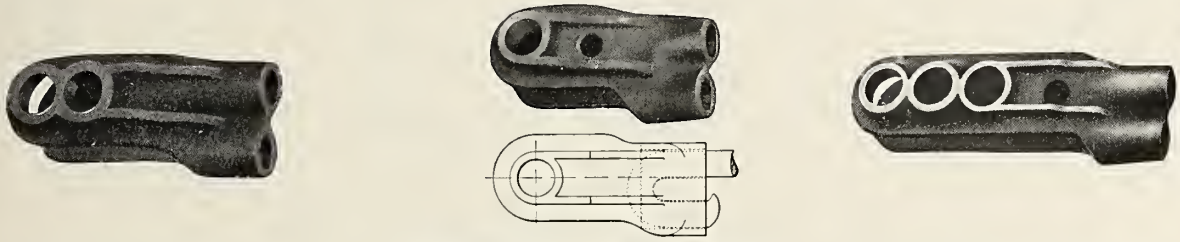

Fig. 1587—National Brake Jaws.

Fig. 1588—Truck Lever Connections.

Fig. 1589—National Dead Lever Guide.

Fig. 1590—Dead Lever Guide.

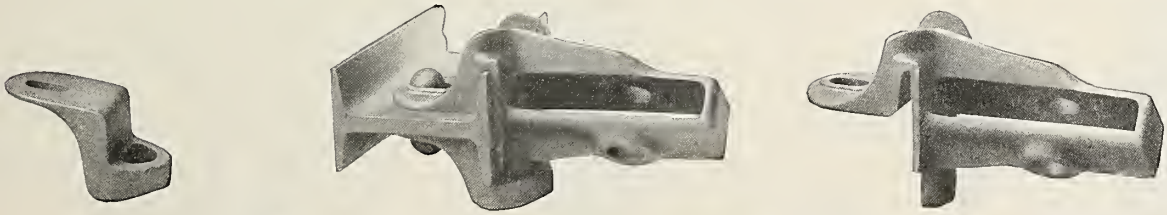

Fig. 1591—Two-Piece Adjustable Brake Beam Fulcrum.

The National Malleable Castings Company.

Fig. 1592—National Sheave Jaw.

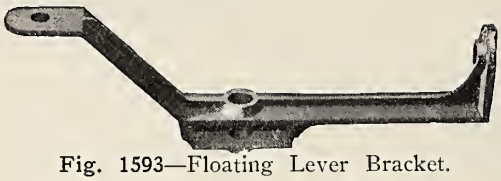

Fig. 1593—Floating Lever Bracket.

Fig. 1594—Brake Shoe Key.

Fig. 1595—Finger Guard.

Fig. 1596—Pipe Clamp.

Fig. 1597—National Push Rod, Jaw and Tip.

Fig. 1598 — Pipe Clamp.

Fig. 1599 — Pipe Hanger.

Fig. 1600—Push Rods.

Fig. 1601 — Pipe Hanger.

Fig. 1602—Repair Nipples.

Fig. 1603—Hose Nipple.

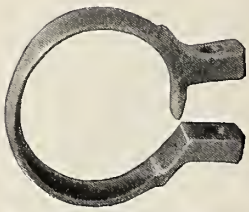

Fig. 1604—Hose Clamp.

The National Malleable Castings Company.

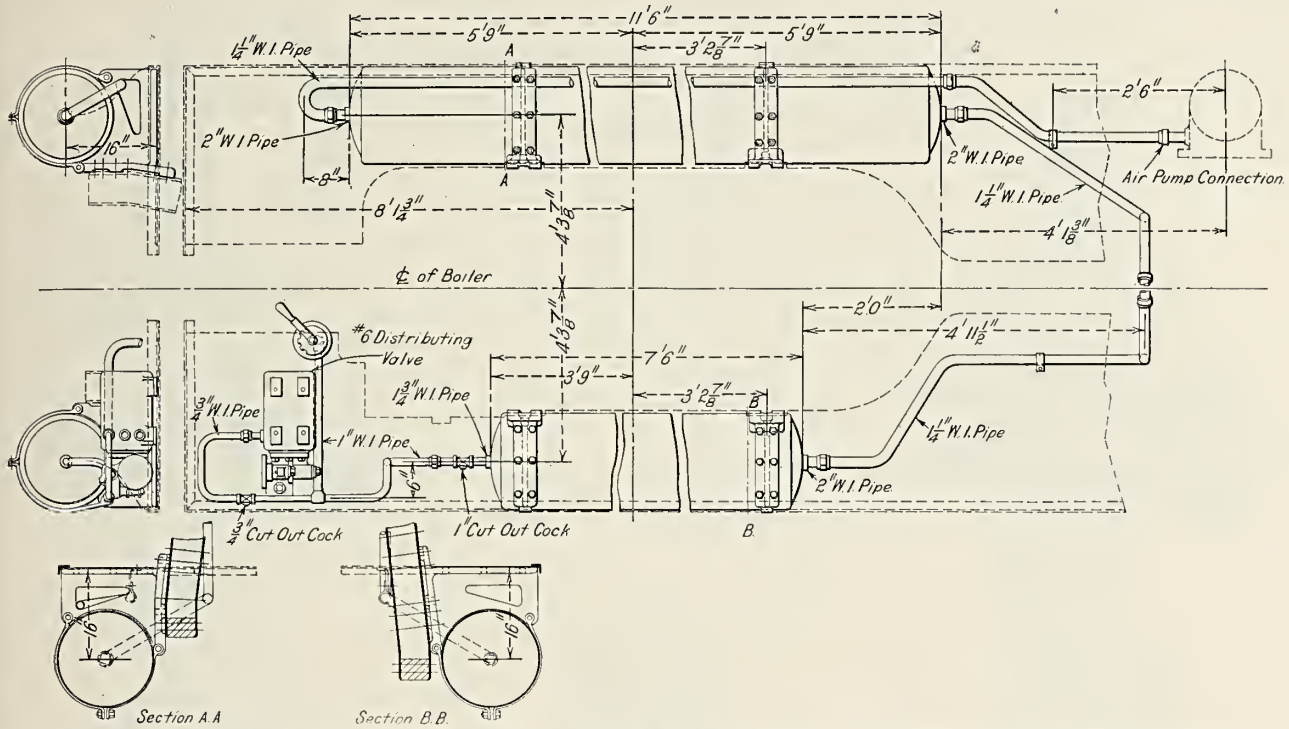

Fig. 1605—Location of Main Air Reservoir on Class E6 Atlantic Type (4-4-2) Locomotive; Pennsylvania Railroad.

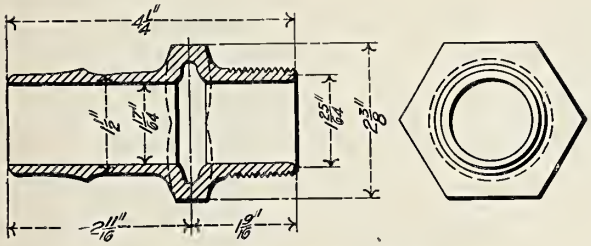

Fig. 1606—Air Brake Hose Nipple.

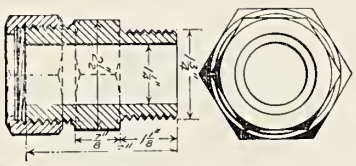

Fig. 1607—Pipe Connection to Main Reservoir.

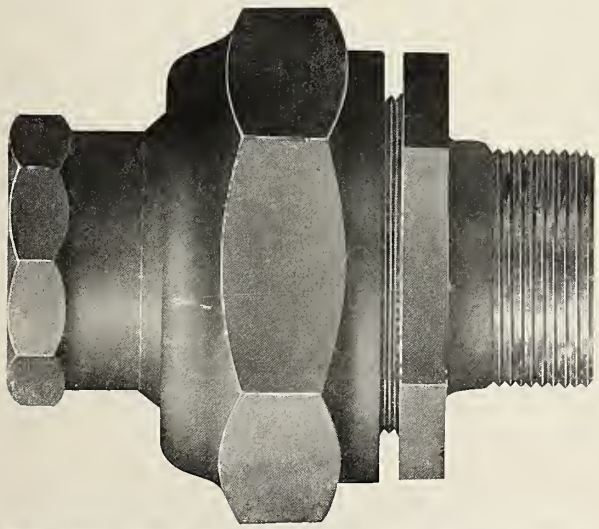

Fig. 1608—Main Reservoir Ball Joint Pipe Connection; Greenlaw Manufacturing Company.

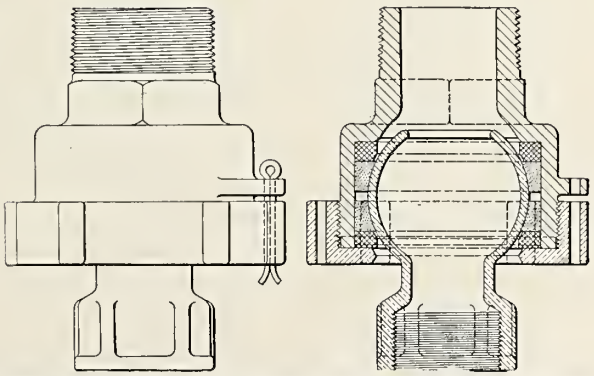

Fig. 1609—Main Reservoir Ball Joint Pipe Connection; Franklin Railway Supply Company.

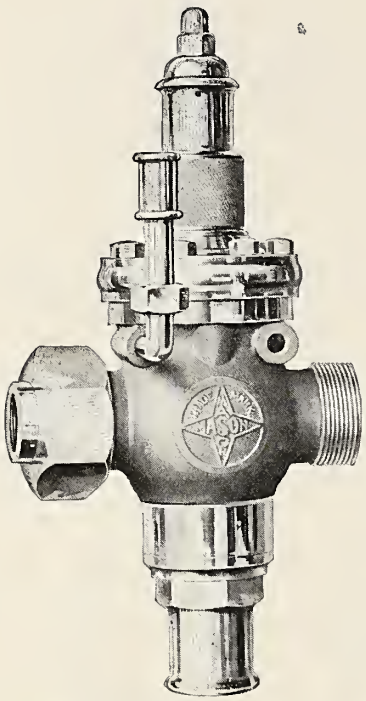

Fig. 1610—Mason Air Pump Governor. Mason Regulator Company.

Names of Parts of Fig. 1611.

1 *Spring Case Cap*
2 *Screw*
3 *Jam Nut*
4 *Spring Button*
5 *Diaphragm Spring*
6 *Cricket*
7 *Spring Case*
8 *Auxiliary Valve*
9 *Bonnet Screw*
10 *Auxiliary Valve Spring*
11 *Diaphragm Button*
12 *Throat Plug*
13 *Pressure Inlet Plug*
14 *Ell*
15 *Nut*
16 *Nipple*
17 *Inlet Tail Piece*
18 *Inlet Nut*
19 *Piston*
20 *Dash Pot*
21 *Main Valve*
22 *Main Valve Spring*
23 *Body*
24 *Diaphragm*
25 *Bonnet Plug*
26 *Bonnet*
27 *Drip Plug*
28 *Coupling*

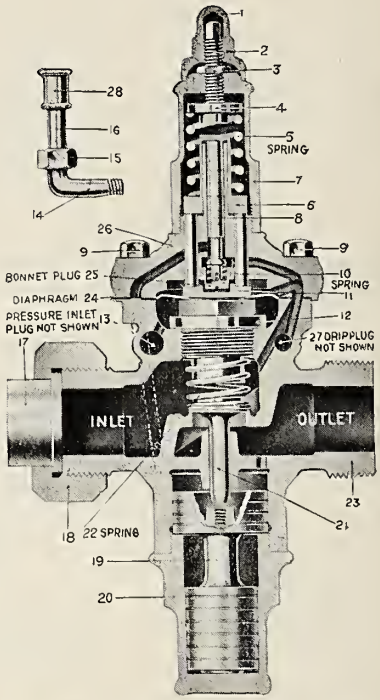

Fig. 1611—Mason Air Pump Governor; Mason Regulator Company.

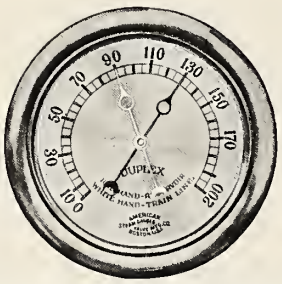

Fig. 1612—Duplex Air Gage; American Steam Gauge and Valve Manufacturing Company.

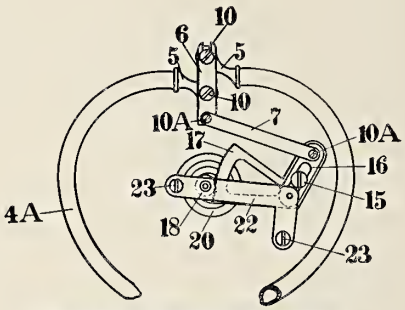

UPPER OR RESERVOIR SPRING & CONNECTIONS.

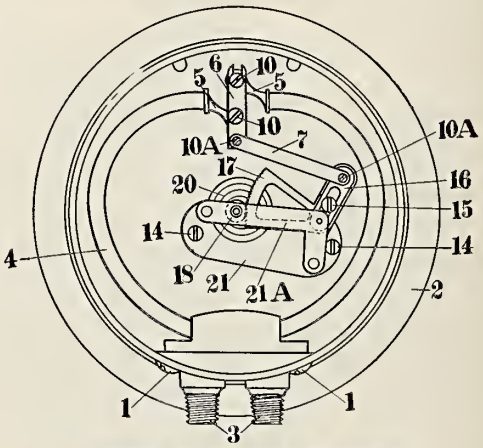

LOWER OR TRAIN-LINE SPRING & CONNECTIONS.

Fig. 1613—Duplex Air Gage; Ashton Valve Manufacturing Company.

Names of Parts of Fig. 1613.

1 *Socket Screws*
2 *Case*
3 *Socket*
4 *Lower or Train Line Spring*
4A *Upper or Reservoir Spring*
5 *Tips*
6 *Main Connection Arms*
7 *Movement Connection Arms*
10 *Connection Screws*
10A *Movement Arm Connection Screws*
14 *Screws Holding Movement in Case*
15 *Adjusting Slide Lock Screws*
16 *Adjusting Slide*
17 *Segment*
18 *Pinion*
20 *Hair Springs*
21 *Bottom Movement Plate*
21A *Middle Movement Plate*
22 *Top Movement Plate*
23 *Screws Holding Movement together*

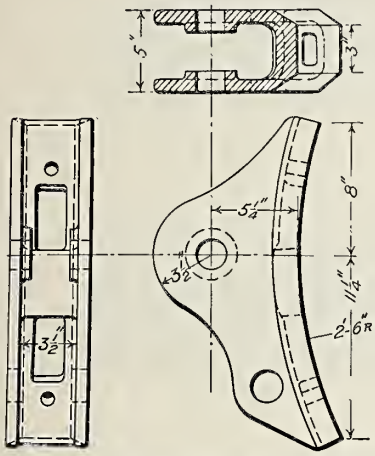

Fig. 1614 — Brake Head for Trailing Truck on Atlantic Type (4-4-2) Locomotive; Pennsylvania Railroad.

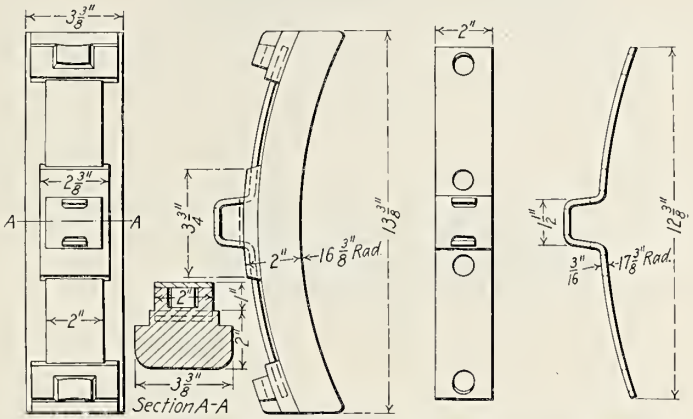

Fig. 1615—Brake Shoe; General Brake Shoe & Supply Company.

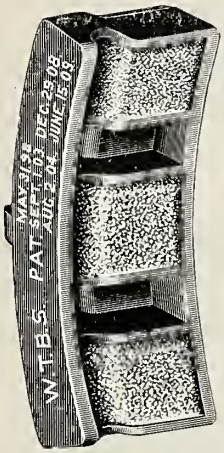

Fig. 1616—Wheel Truing Driver Brake Shoe; Wheel Truing Brake Shoe Company.

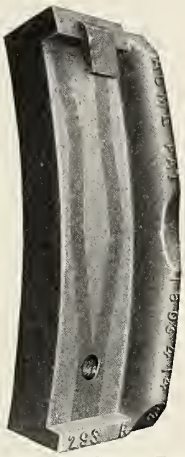

Fig. 1617—Acme Steel Back Driver Brake Shoe, Back View; Allen & Morrison Brake Shoe & Manufacturing Company.

Fig. 1618—Acme Steel Back Driver Brake Shoe, Contact Surface; Allen & Morrison Brake Shoe & Manufacturing Company.

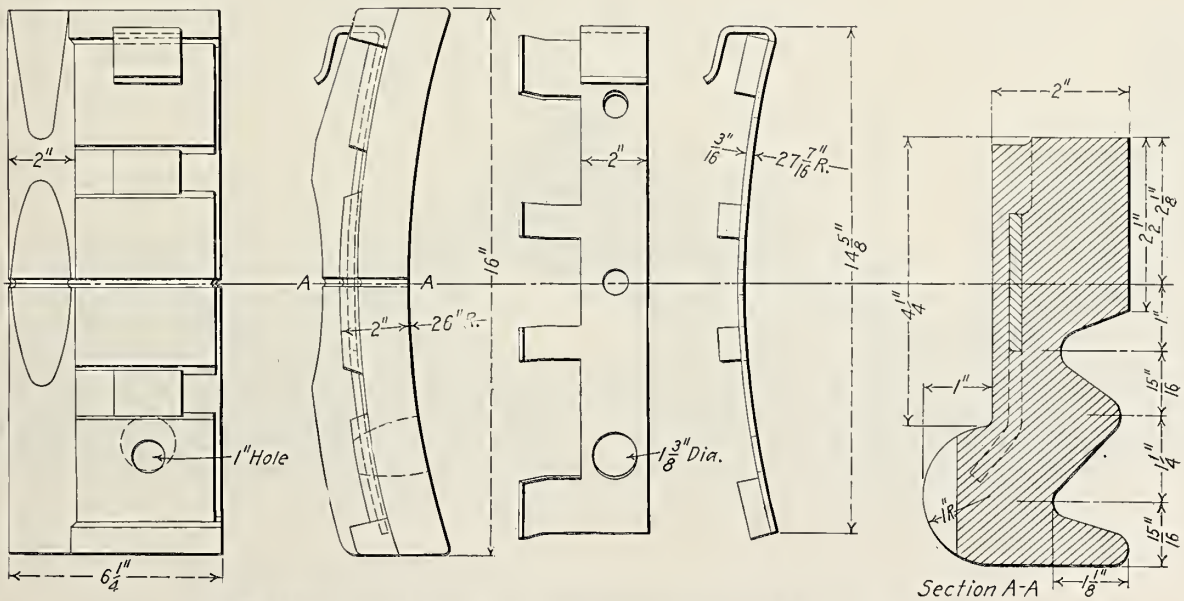

Fig. 1619—Driver Brake Shoe; General Brake Shoe & Supply Company.

Fig. 1620—Special Steel Back and Steel Lug Brake Shoe.

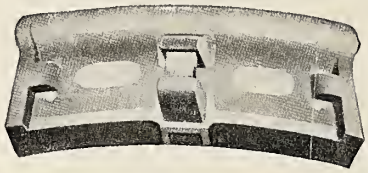

Fig. 1621—Special Steel Back and Steel Lug Brake Shoe.

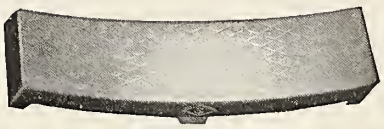

Fig. 1622—Diamond S Type, Unflanged.

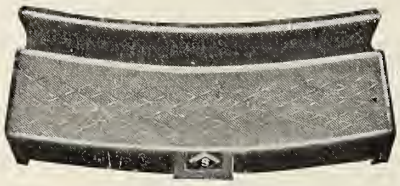

Fig. 1623—Diamond S Type, Flanged.

Figs. 1620-1623 are Special Reinforced Engine Truck and Tender Brake Shoes; American Brake Shoe & Foundry Company.

Fig. 1624—Center Fastening Type.

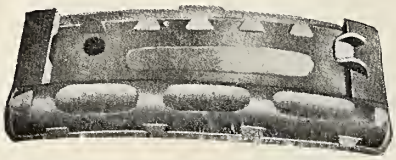

Fig. 1625—Hook and Bolt Type.

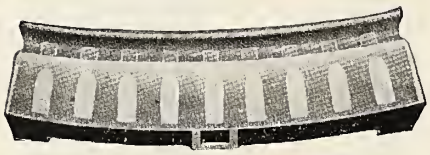

Fig. 1626—Improved Perfecto Type.

Fig. 1627—Perfecto Type.

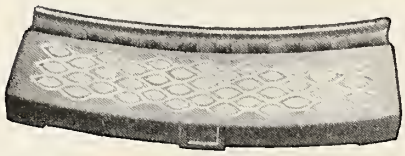

Fig. 1628—Diamond S Perfecto Type

Fig. 1629—Special Insert Type.

Figs. 1624-1629 are Special Reinforced Driver Brake Shoes, Special Steel Back and Steel Lug; American Brake Shoe & Foundry Company.

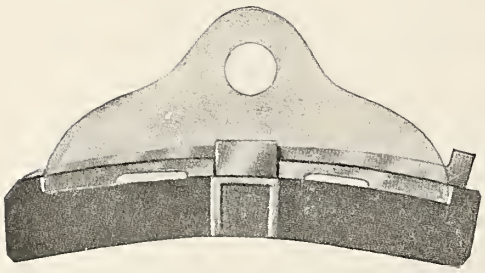

Fig. 1630—With Center Fastening Shoe.

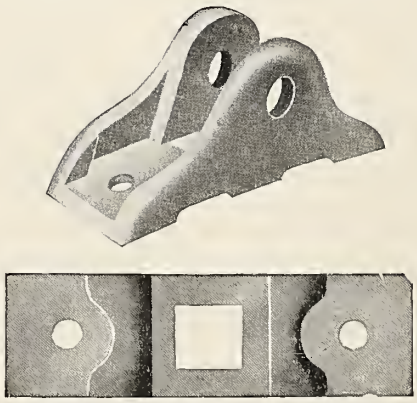

Fig. 1631—Driver Brake Head.

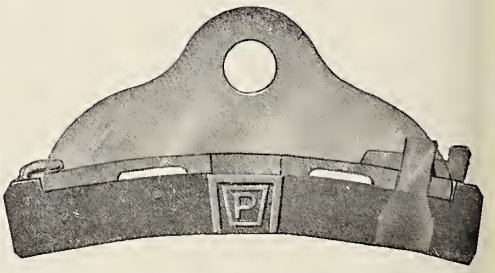

Fig. 1632—With Hook and Bolt Shoe.

Figs. 1630-1632 Shows Improved Combination Driver Brake Head; American Brake Shoe & Foundry Company.

Fig. 1633—Sand Box Arranged for Leach A-10 Pneumatic Sander on Pacific Type (4-6-2) Locomotive. Built for the Nashville, Chattanooga and St. Louis by the Baldwin Locomotive Works.

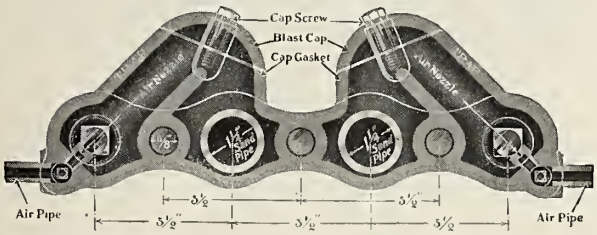

Fig. 1634—Leach A-10 Double Trap for Pneumatic Track Sander; United States Metallic Packing Company.

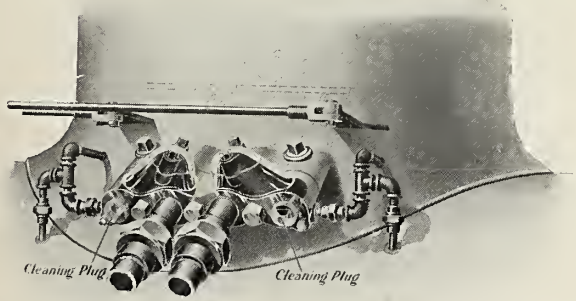

Fig. 1635—Application of Leach A-10 Double Trap for Pneumatic Track Sander; United States Metallic Packing Company.

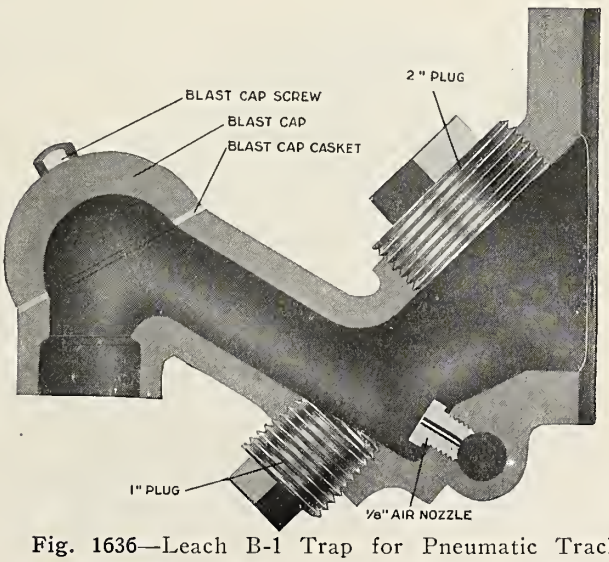

Fig. 1636—Leach B-1 Trap for Pneumatic Track Sander; United States Metallic Packing Company.

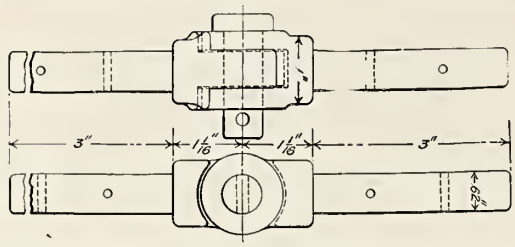

Fig. 1637—Knuckle Joint for Sander Reach Rod.

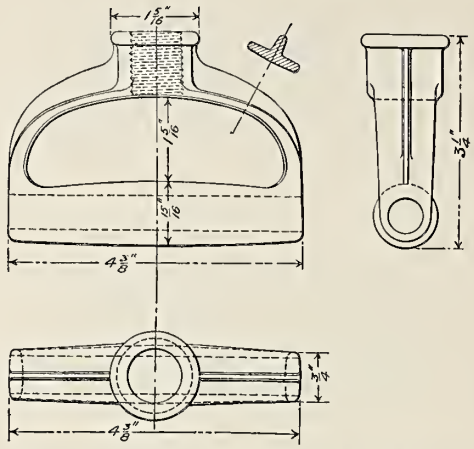

Fig. 1638—Handle for Sander Reach Rod.

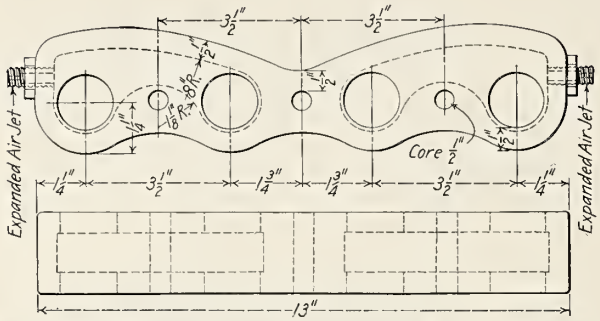

Fig. 1639—Watters Double Sander; J. H. Watters.

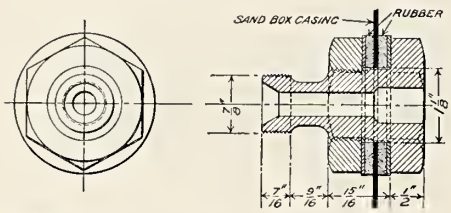

Fig. 1640—Air Pipe Connection to Sandbox; Pennsylvania Railroad.

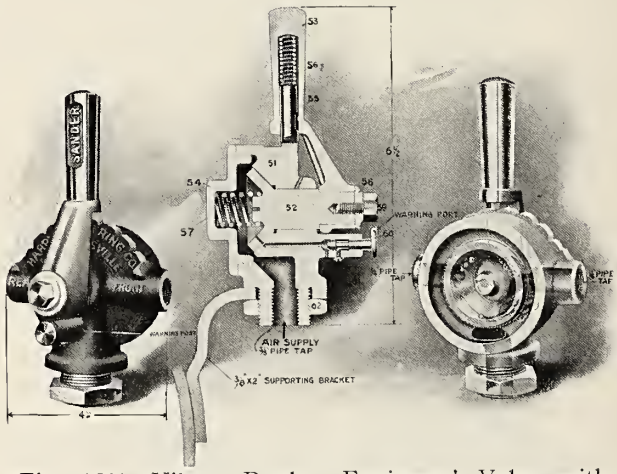

Fig. 1641—Viloco Duplex Engineers' Valve with Warning Attachment for Operating Pneumatic Sanders; Harry Vissering & Company.

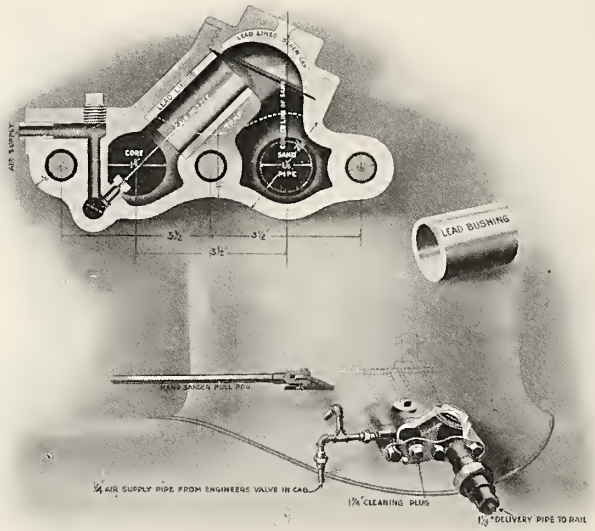

Fig. 1642—Viloco Single Sander, Type AL-101; Harry Vissering & Company.

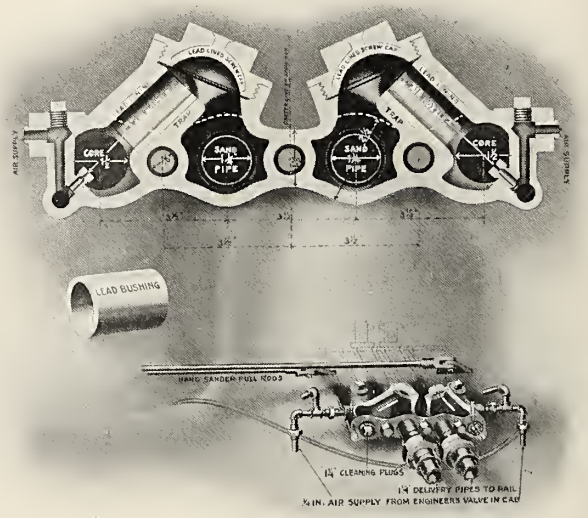

Fig. 1643—Viloco Double Sander; Type AL-110; Harry Vissering & Company.

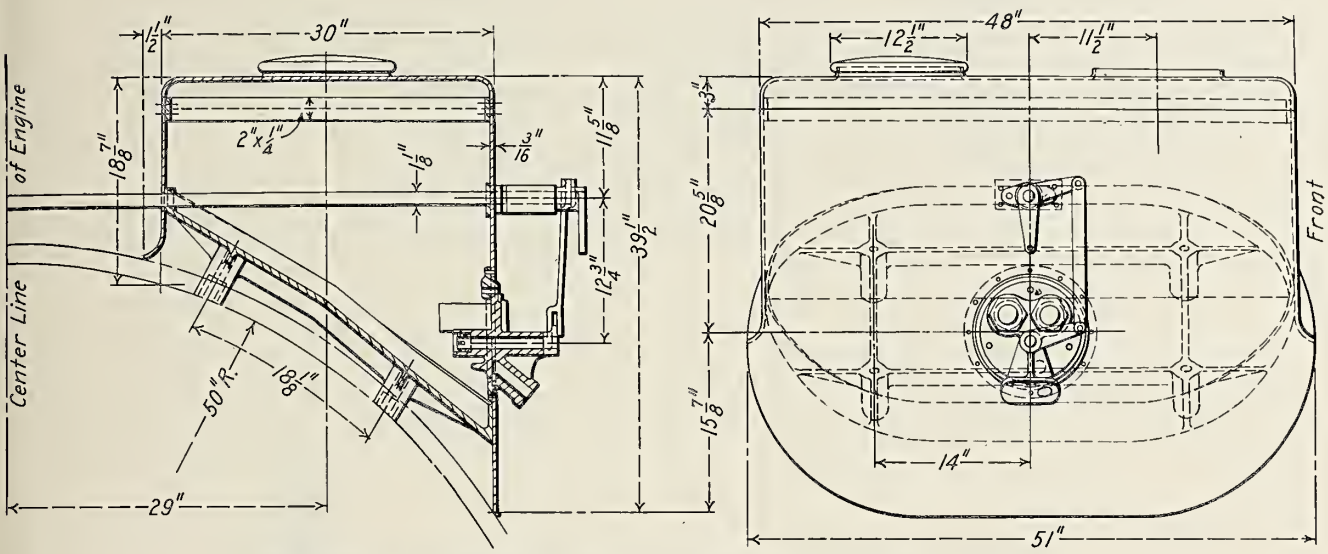

Fig. 1644—Arrangement of Sand Box; American Locomotive Company.

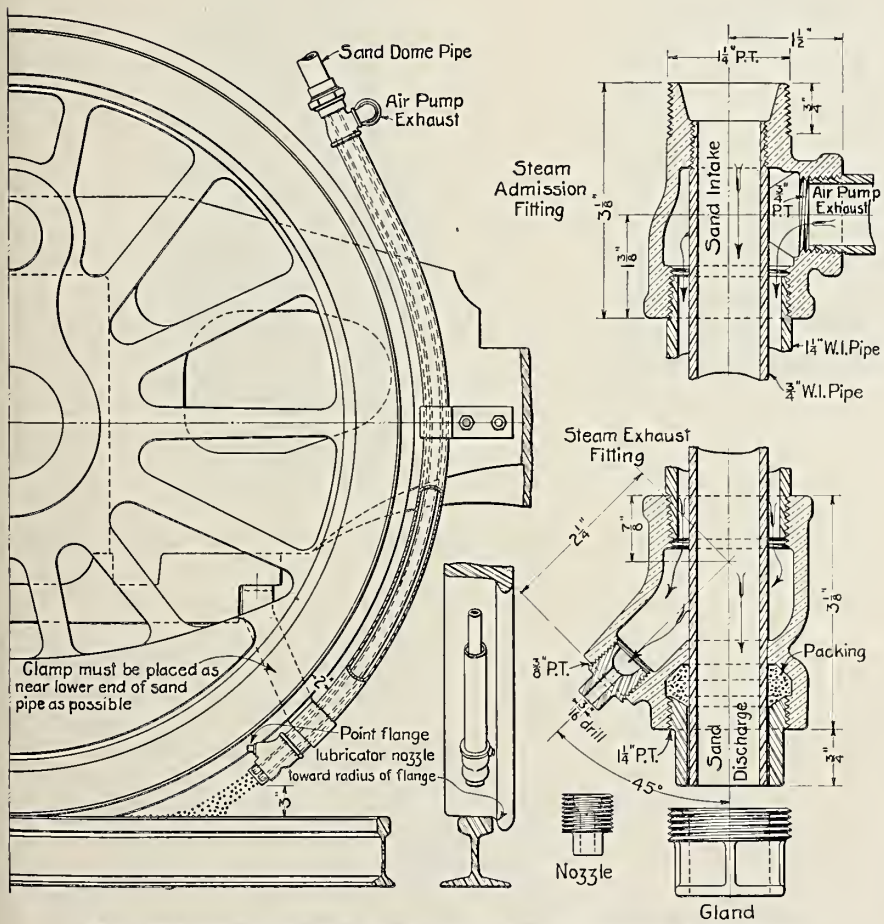

Fig. 1645—Non-Clogging Sand Pipe; Ryan, Galloway & Company.

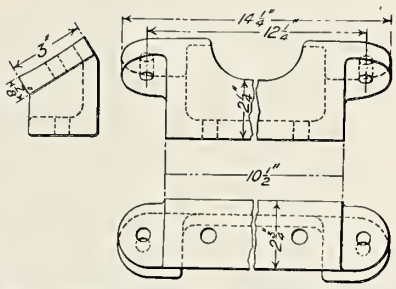

Fig. 1646—Base for Upper Sandbox Step; Pennsylvania Railroad.

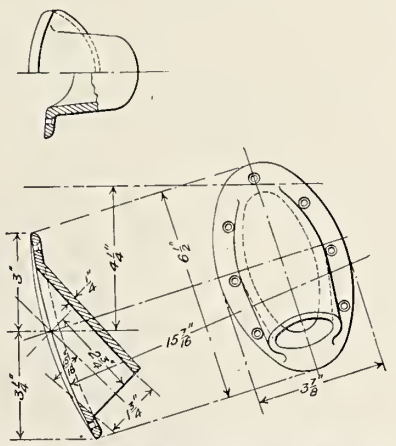

Fig. 1647—Sand Pipe Cover on Sandbox Casing; Pennsylvania Railroad.

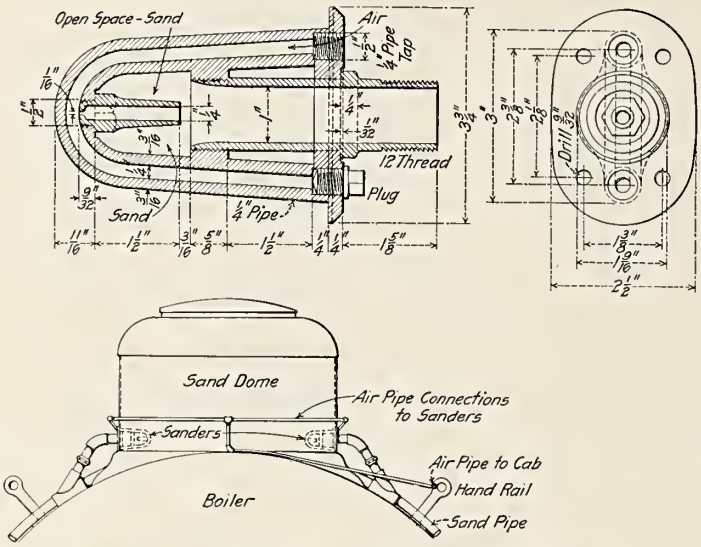

Fig. 1648—Never Clog Pneumatic Track Sander; Norman B. Livermore & Company.

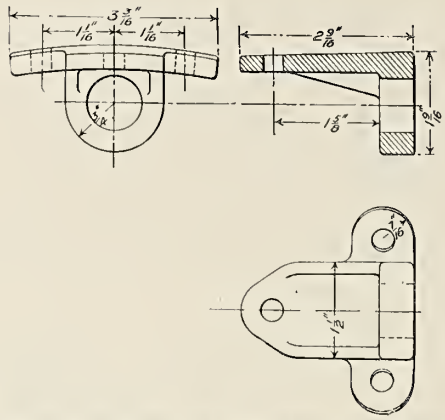

Fig. 1649—Sandbox Base Bracket for Atlantic Type (4-4-2) Locomotive; Pennsylvania Railroad.

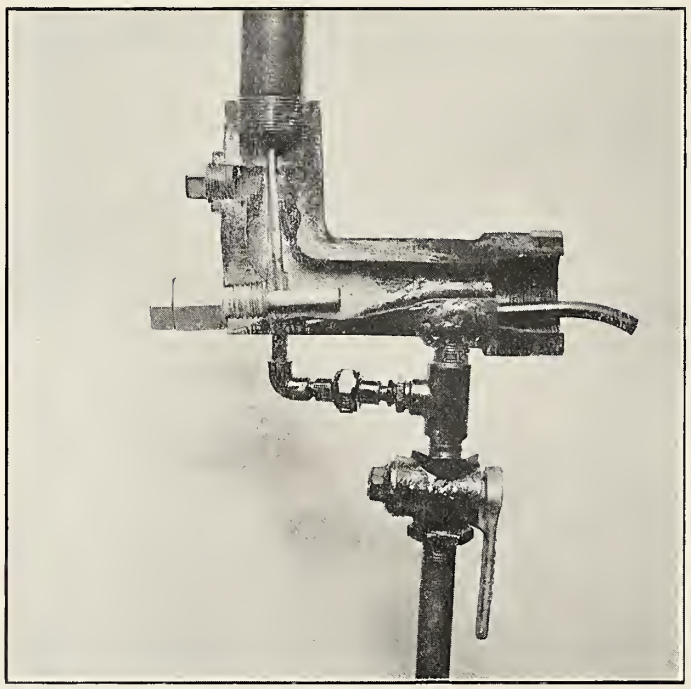

Fig. 1650—Self-Cleaning Sander; White American Locomotive Sander Company.

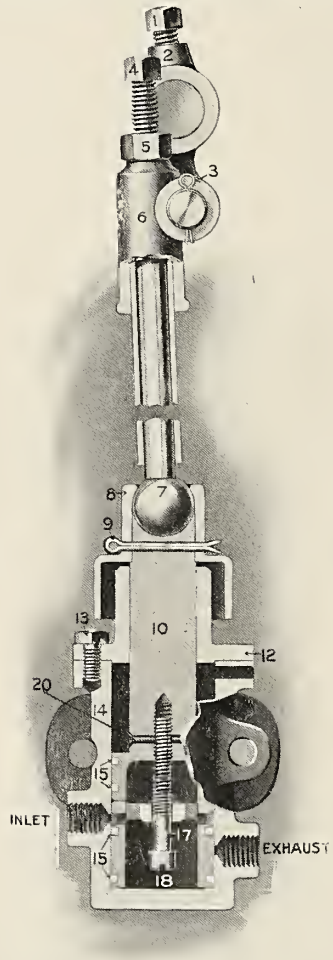

Fig. 1651—Viloco Bell Ringer; Harry Vissering & Company.

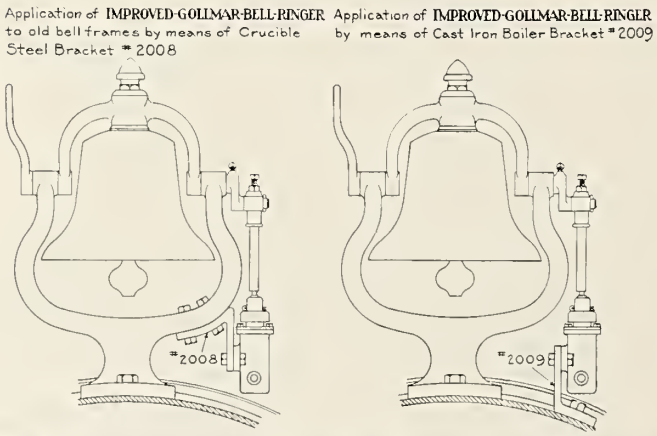

Fig. 1652—Application of Viloco Bell Ringer; Harry Vissering & Company.

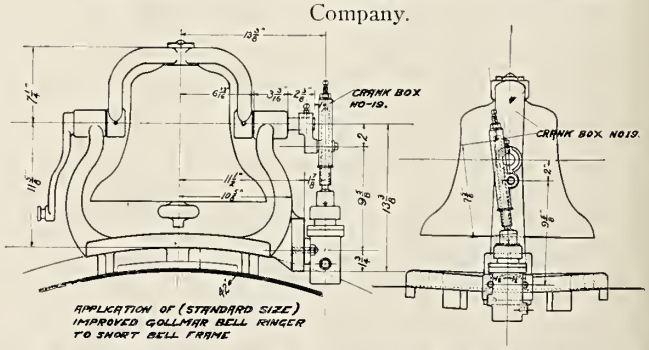

Fig. 1653—Application of Viloco Bell Ringer; Harry Vissering & Company.

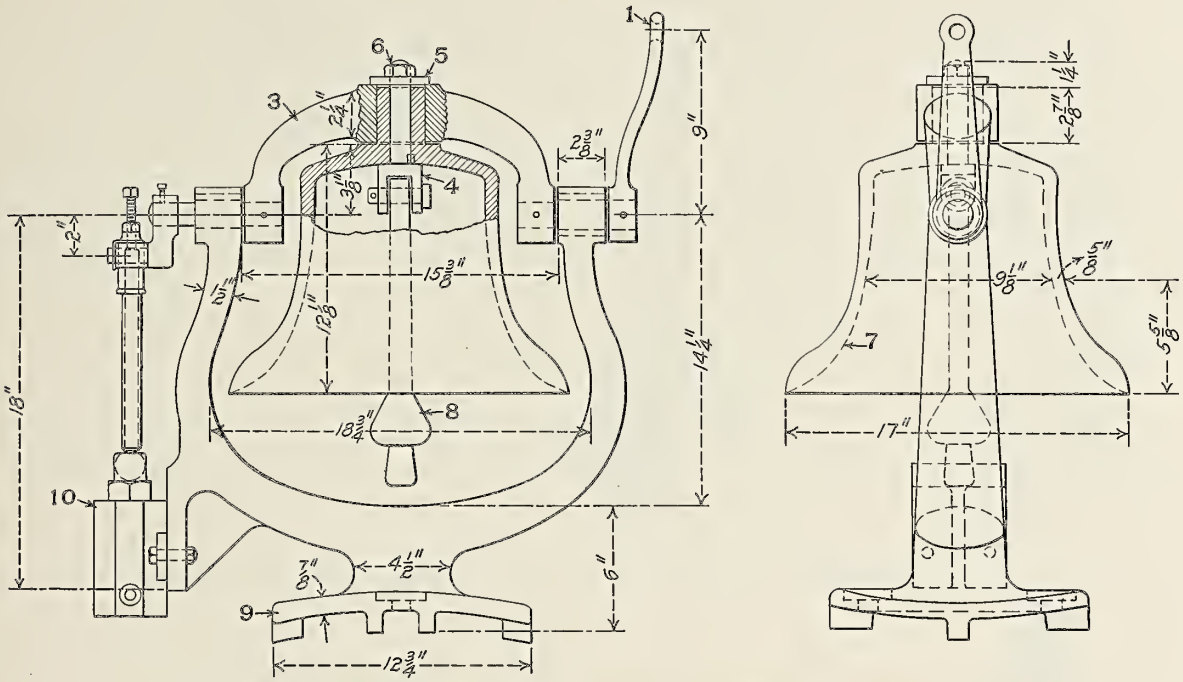

Fig. 1654—Locomotive Bell; Baldwin Locomotive Works.

Names of Parts of Figs. 1654-1657.

1 *Lever*
2 *Yoke Bearing Cap*
3 *Yoke*
4 *Tongue Hanger*
5 *Tongue Hanger Washer*
6 *Tongue Hanger Nut*
7 *Bell*
8 *Tongue*
9 *Stand*
10 *Bell Ringer*

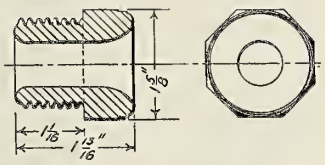

Fig. 1655—Glass Bell Rope Bushing; Pennsylvania Railroad.

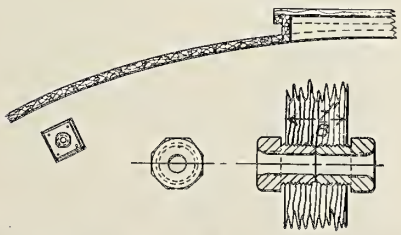

Fig. 1656—Location of Bell Rope Bushing in Cab. Pennsylvania Railroad.

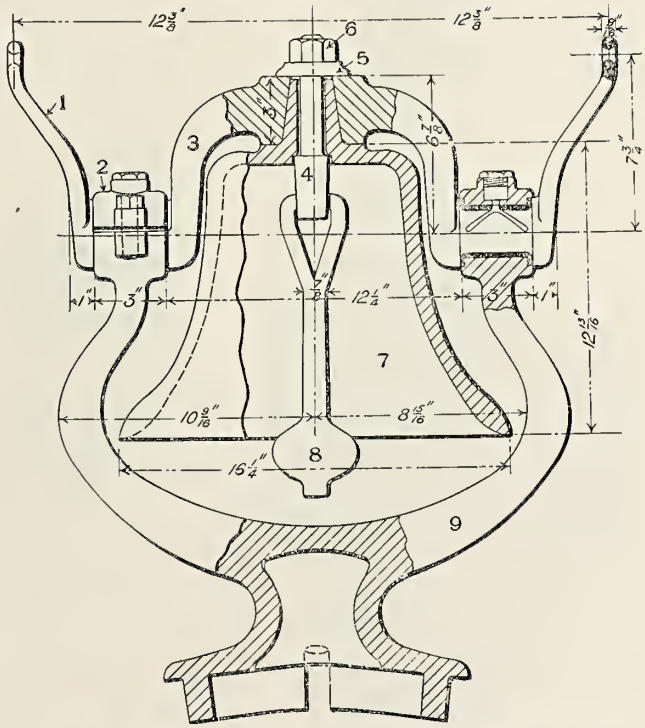

Fig. 1657—Standard Bell and Stand; Pennsylvania Railroad.

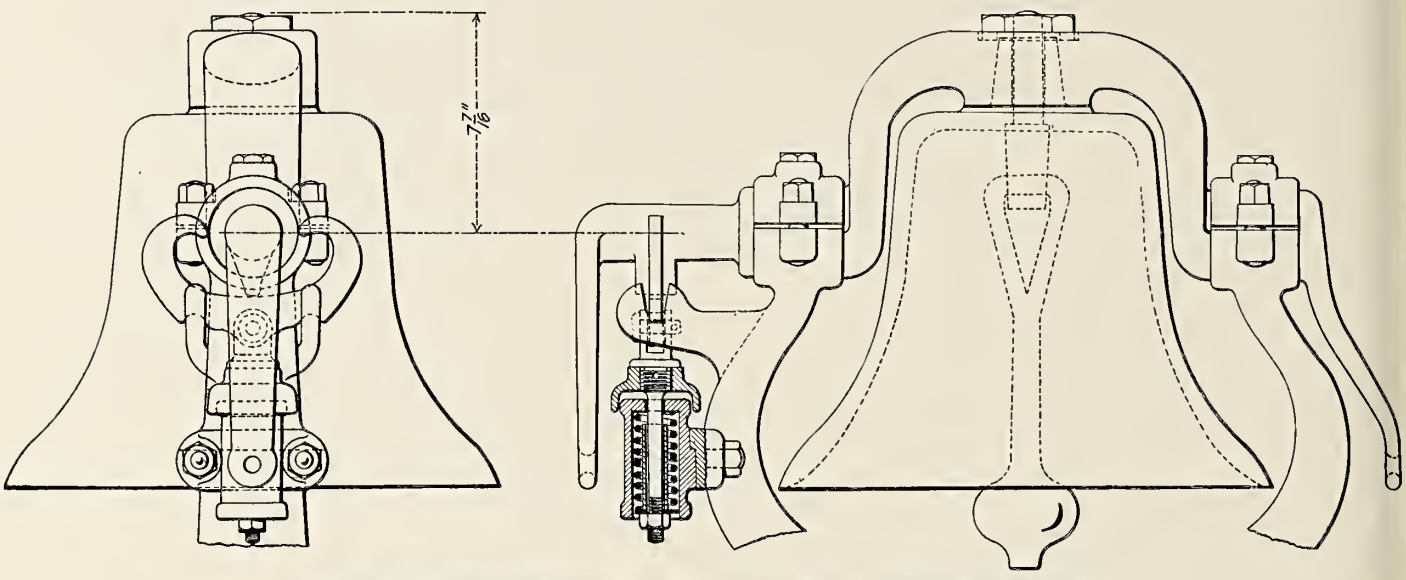

Fig. 1658—Spring Balance for Locomotive Bell; Pennsylvania Railroad.

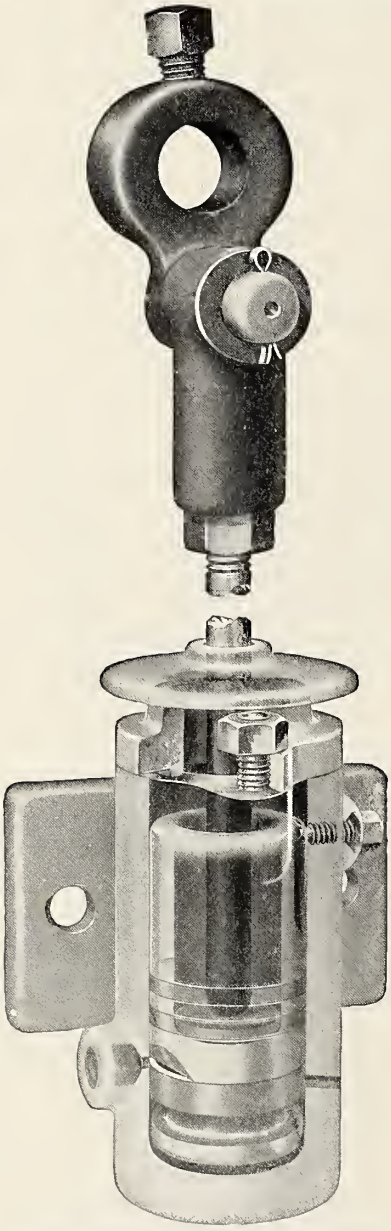

Fig. 1659—Trojan Bell Ringer; H. G. Hammet.

Names of Parts of Fig. 1661.

B-1	*Cylinder*	B-14	*Connecting Rod*
B-2	*Connecting Rod End Bearing*	B-15	*Lock Nut*
B-3	*Connecting Rod*	B-16	*Adjusting Screw*
B-4	*Bell Crank*	B-17	*Lock Nut*
B-8	*Bearing Socket*	B-18	*Cylinder Head, Bottom*
B-11	*Piston Rod*	B-19	*Cylinder Head, Top*
B-12	*Valve Piston*	B-20	*Piston*
B-13	*Piston Ring*		

Fig. 1660 — Application of Little Giant Bell Ringer; Chicago Pneumatic Tool Company.

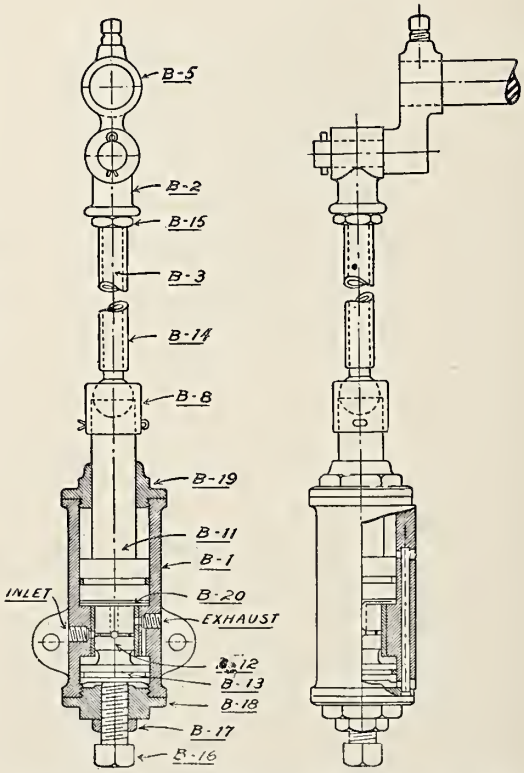

Fig. 1661—Little Giant Bell Ringer; Chicago Pneumatic Tool Company.

Names of Parts of Security Bell Ringer, Fig. 1662.

A *Piston*
B *Cylinder*
C *Snap Ring*
D *Collar*
E *Exhaust Port*
F *Intake*
G *Exhaust Cavity*
H *Air Passage*

Names of Parts of Western Bell Ringer, Fig. 1664.

1 *Air Inlet*
2 *Piston*
3 *Bell Crank*
4 *Exhaust Port*
5 *Valve Motion Screw*
6 *Bearing Socket*
7 *Bell Crank Yoke*
8 *Adjustable Connecting Rod*

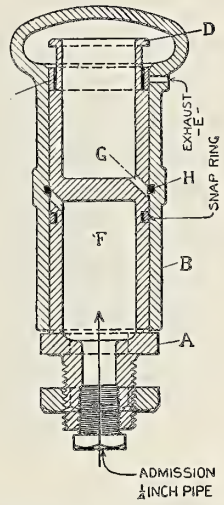

Fig. 1662—Security Bell Ringer; Adreon Manufacturing Company.

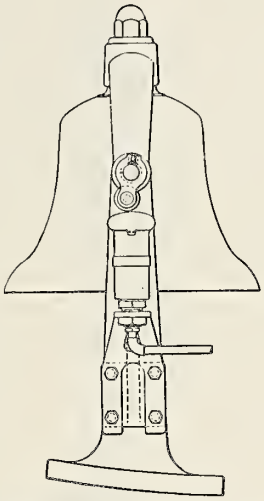

Fig. 1663 — Application of Security Bell Ringer; Adreon Manufacturing Company.

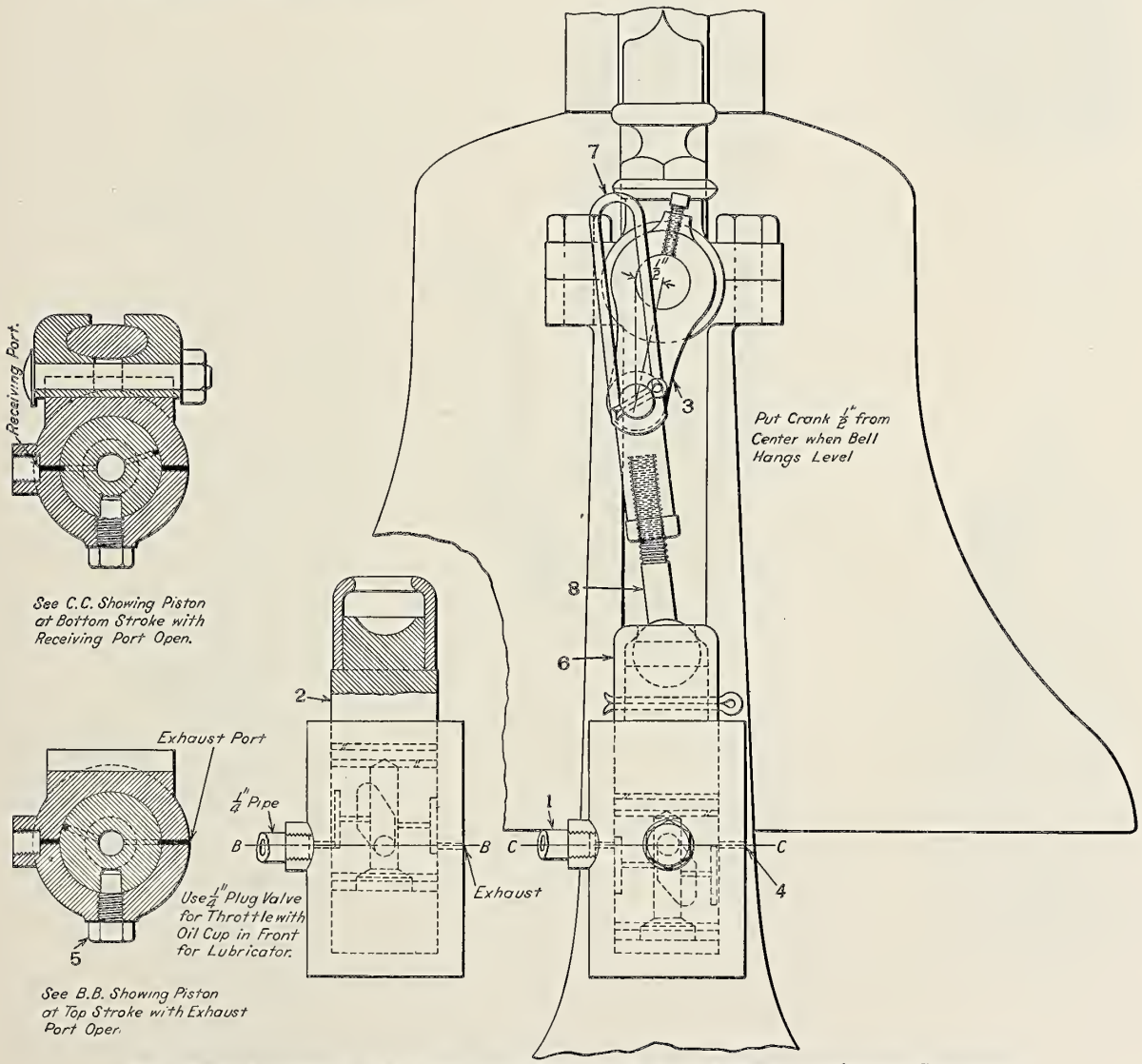

Fig. 1664—Application of Western Bell Ringer; Western Railway Equipment Company.

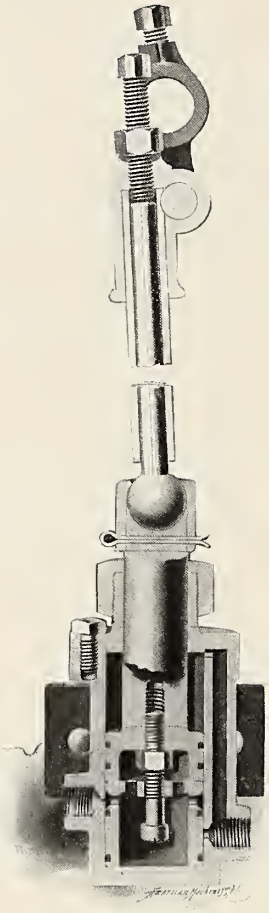

Fig. 1665 — Gollmar Bell Ringer; United States Metallic Packing Company.

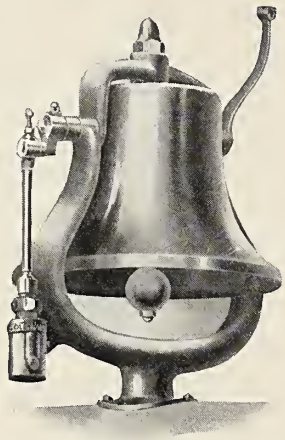

Fig. 1666 — Application of Gollmar Bell Ringer; United States Metallic Packing Company.

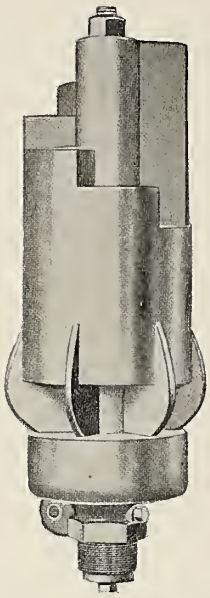

Fig. 1667 — Chime Whistle; Nathan Manufacturing Company.

Fig. 1668 — Whistle; Edna Brass Manufacturing Company.

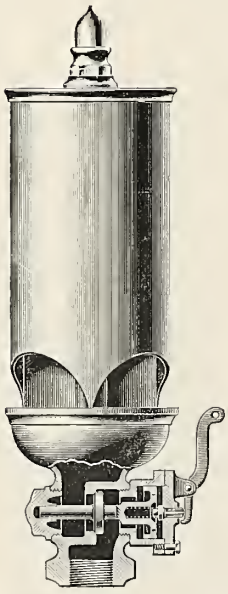

Fig. 1669—Single Bell Chime Whistle with Compound Whistle Valve; Star Brass Manufacturing Company.

Names of Parts of Fig. 1670.

1	*Cap Nut*	10	*Base Screw*
2	*Stem*	11	*Steam Inlet*
3	*Cap*	12	*Steam Passage*
4	*Bell*	13	*Valve*
5	*Stem Casing*	14	*Valve Seat*
6	*Lip*	15	*Steam Port*
7	*Outlet*	16	*Valve Cap*
8	*Steam Chamber*	17	*Lever*
9	*Riser*	18	*Lever Spring*

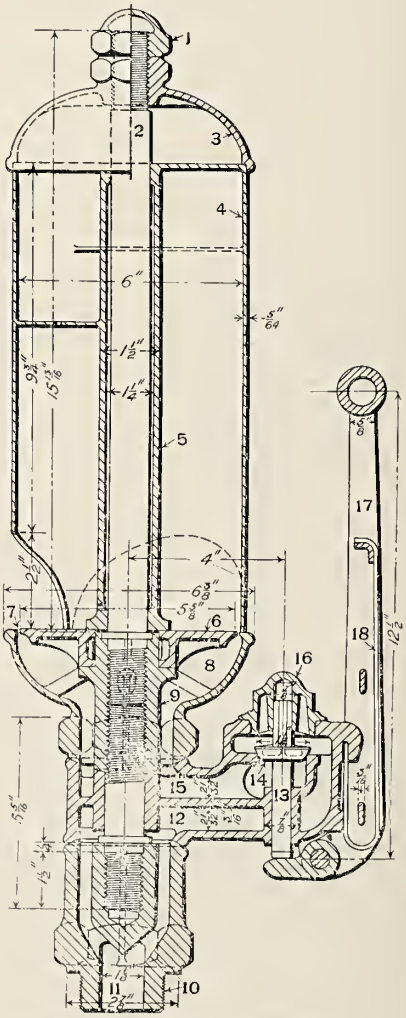

Fig. 1670—Chime Whistle; Pennsylvania Railroad.

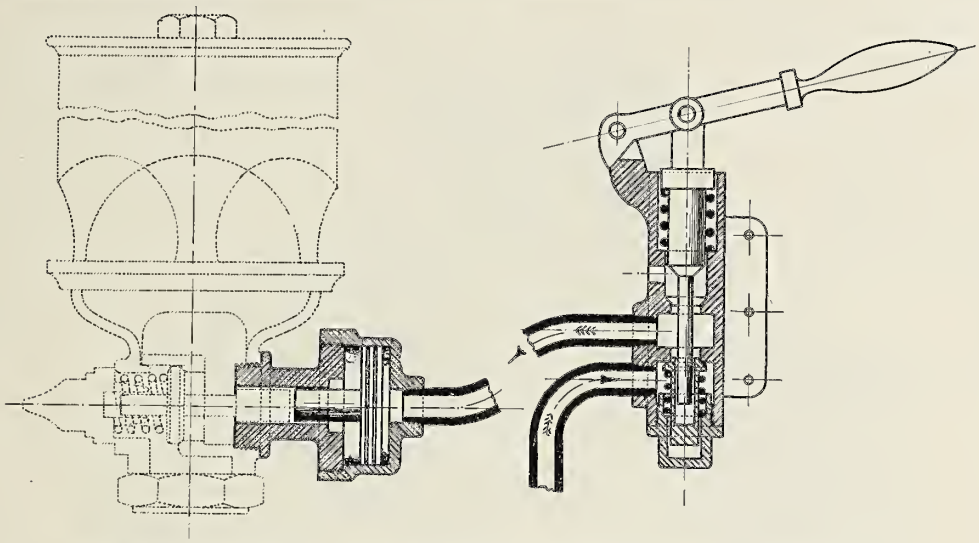

Fig. 1671—Packless Actuator for Operating Whistle Valves; Patterson-Allen Engineering Company.

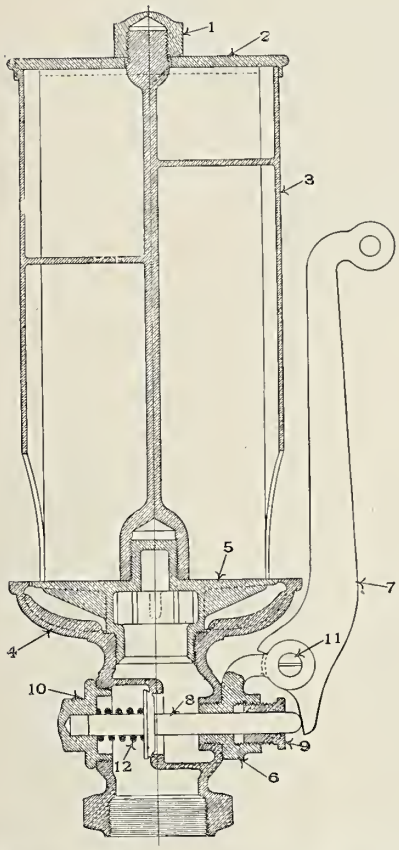

Fig. 1672—Whistle; American Steam Gauge & Valve Manufacturing Company.

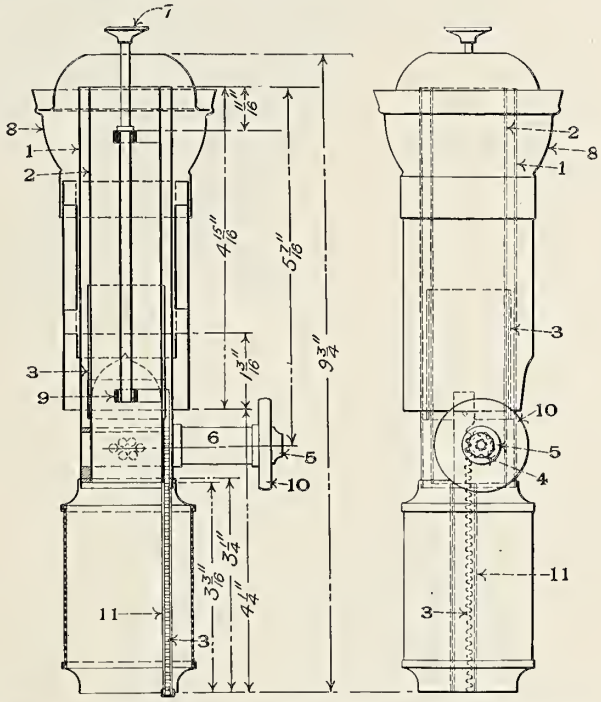

Fig. 1673—Standard Headlight Burner; Pennsylvania Railroad.

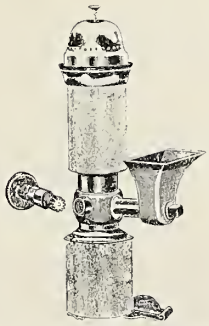

Fig. 1674—Williams' Headlight Burner with Wildner Stuffing Box; Star Headlight Company.

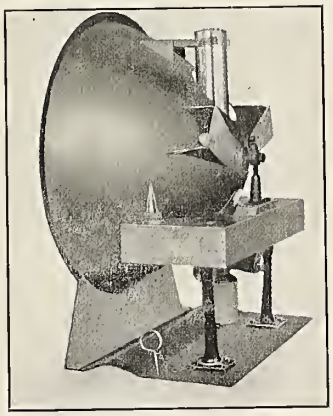

Fig. 1675—Wabash Headlight; Star Headlight Company.

Names of Parts of Fig. 1672.

1	*Cap Nut*	5	*Disc*	9	*Adjusting Nut*
2	*Cap*	6	*Fulcrum*	10	*Body Nut*
3	*Bell*	7	*Lever*	11	*Lever Pin*
4	*Body*	8	*Valve*	12	*Spring*

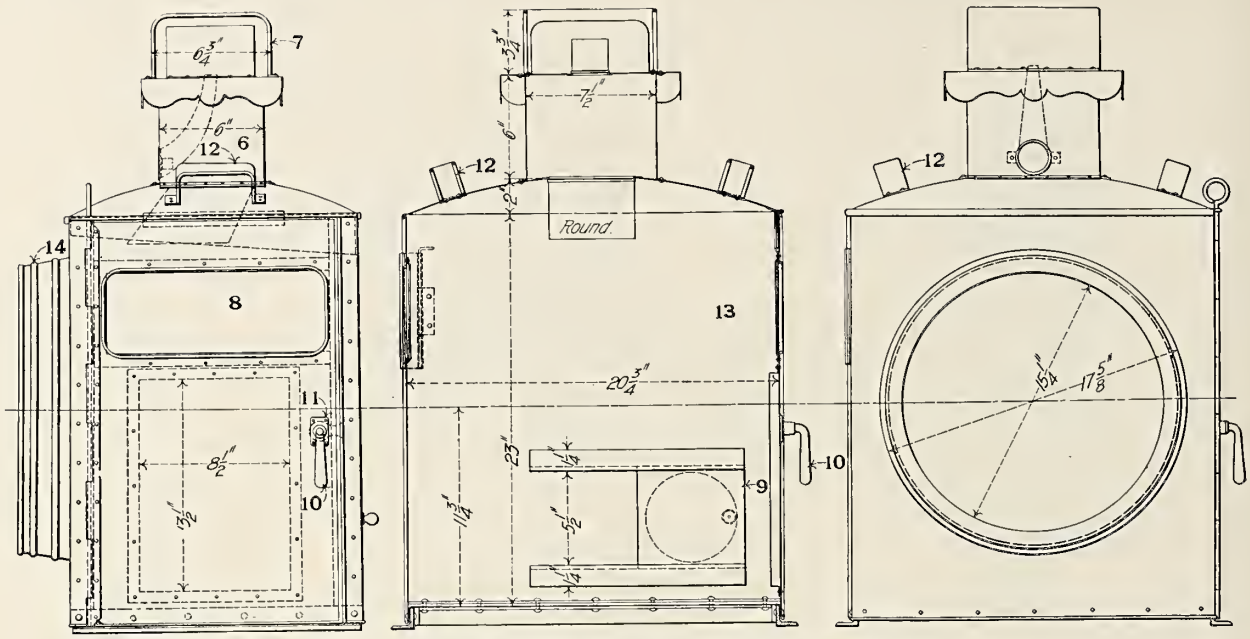

Fig. 1676—Standard 16-in. Oil Headlight; Pennsylvania Railroad.

Names of Parts of Figs. 1676-1677.

1 *Reflector*	5 *Oil Reservoir*	9 *Lighting Hole Slide*	13 *Casing*
2 *Reflector Casing*	6 *Ventilator*	10 *Door Handle*	14 *Front Glass Casing*
3 *Reflector Stand*	7 *Ventilator Cap*	11 *Door Plate*	15 *Chimney*
4 *Burner*	8 *Number Slide*	12 *Lifting Handle*	16 *Chimney Holder*

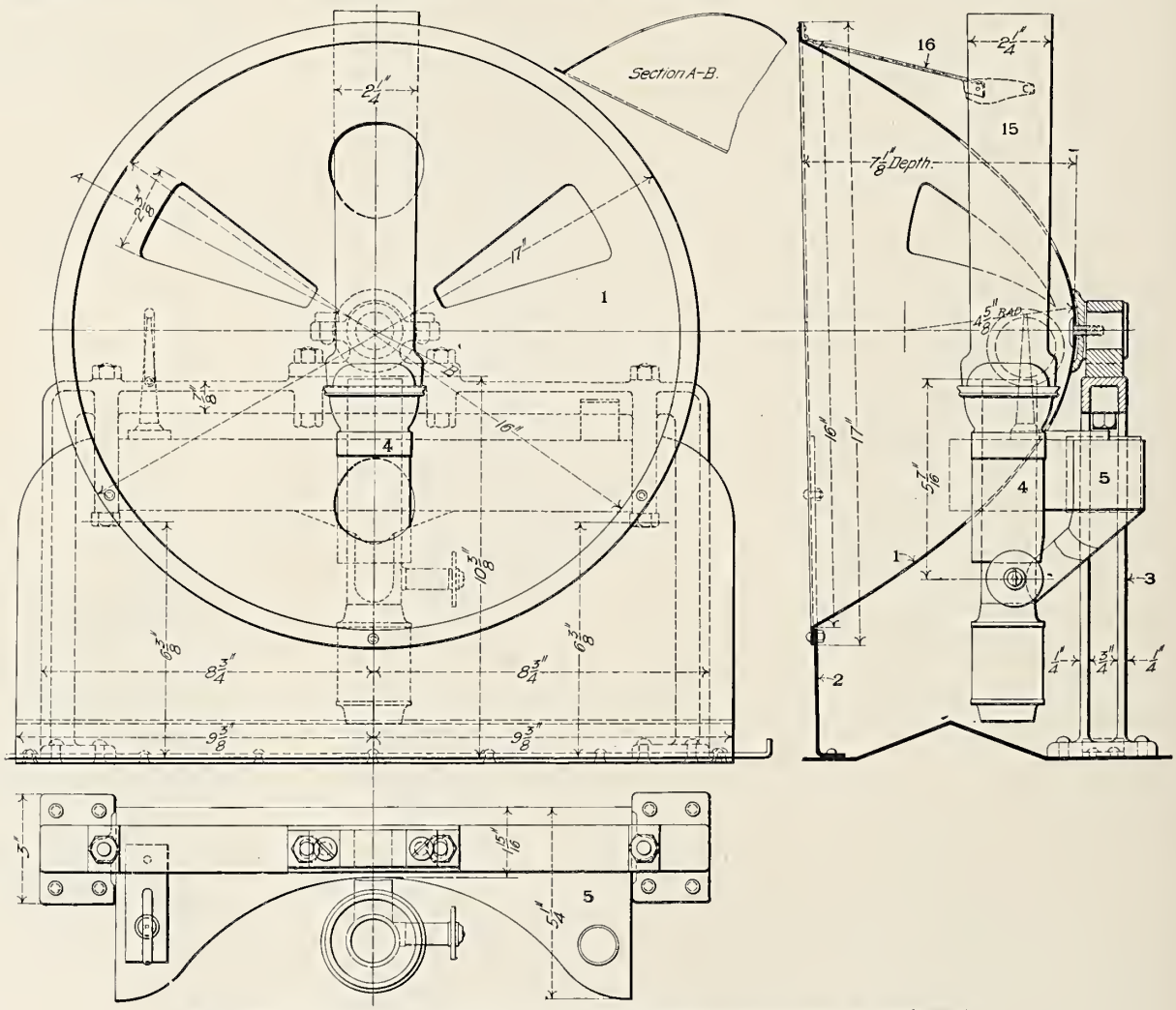

Fig. 1677—Details of Standard 16-in. Oil Headlight; Pennsylvania Railroad.

Fig. 1678—Lake Shore 2,800 Candle Power Oil Headlight, No. 250; Dressel Railway Lamp Works.

Fig. 1679—Storrs Never Break Mica Headlight Chimney, Type A; Storrs Mica Company.

Fig. 1680—Storrs Never Break Mica Headlight Chimney, C-65, for Acetylene Headlight; Storrs Mica Company.

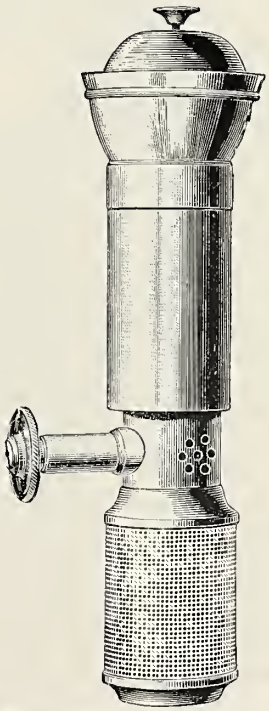

Fig. 1681 — Headlight Burner; F. H. Lovell & Company.

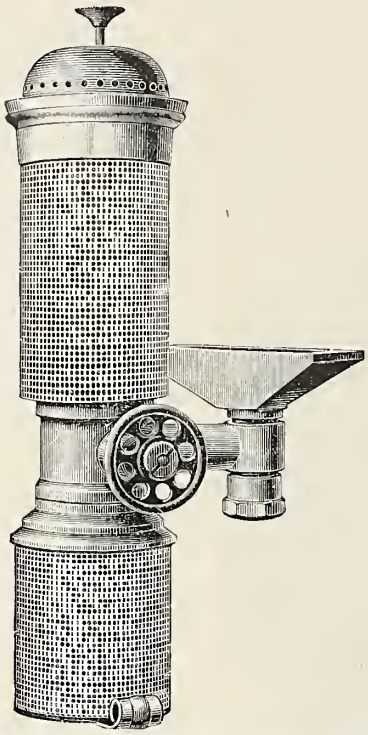

Fig. 1682—Headlight Burner; F. H. Lovell & Company.

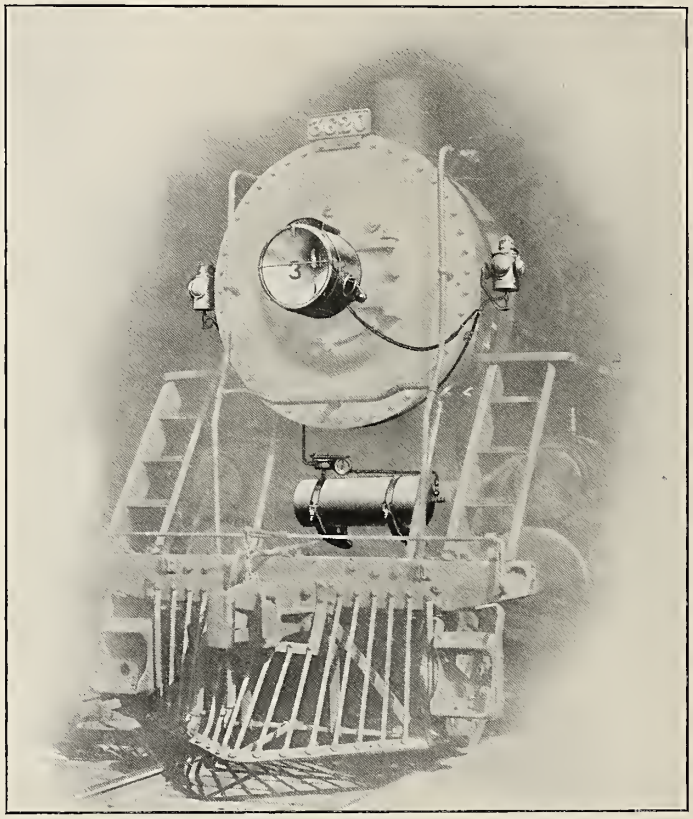

Fig. 1683—Acetylene Lighting Equipment Applied to Front End of Locomotive; Commercial Acetylene Railway Light & Signal Company.

Names of Parts of Fig. 1684.

100°	*Cylinder*	CF-330	*Tee*
CB-80	*Burner*	CF-360	*Tee*
CC-202	*Connecting Nut*	CF-910	*Tee*
CC-261	*Connecting Nipple*	CG-200	*Gage*
CC-270	*Cock*	CP-220	*Steel Tubing*
CC-400	*Mica Chimney*	CP-230	*Steel Tubing*
CC-280	*Flexible Connection*	CP-273	*Pipe Nipple*
CF-300	*Connection*	CR-50	*Regulator*

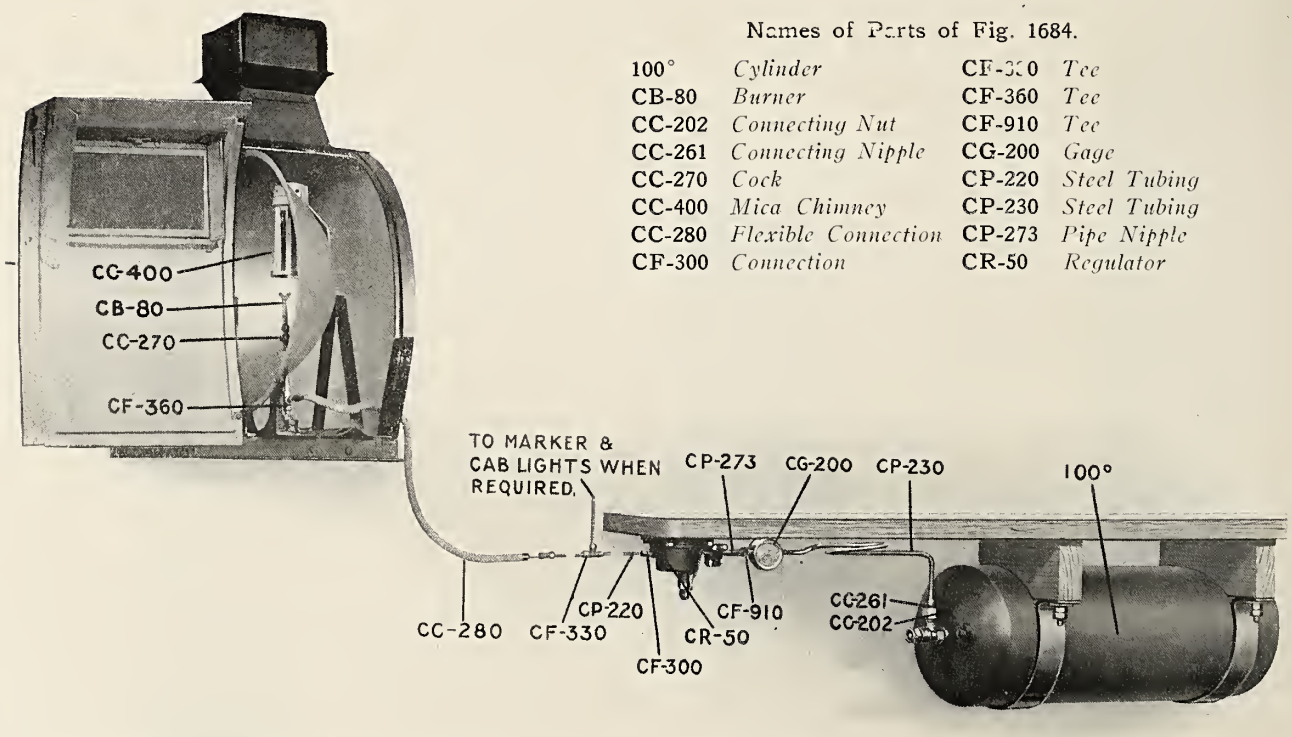

Fig. 1684—Acetylene Lighting Equipment Applied to Running Board; Commercial Acetylene Railway Light & Signal Company.

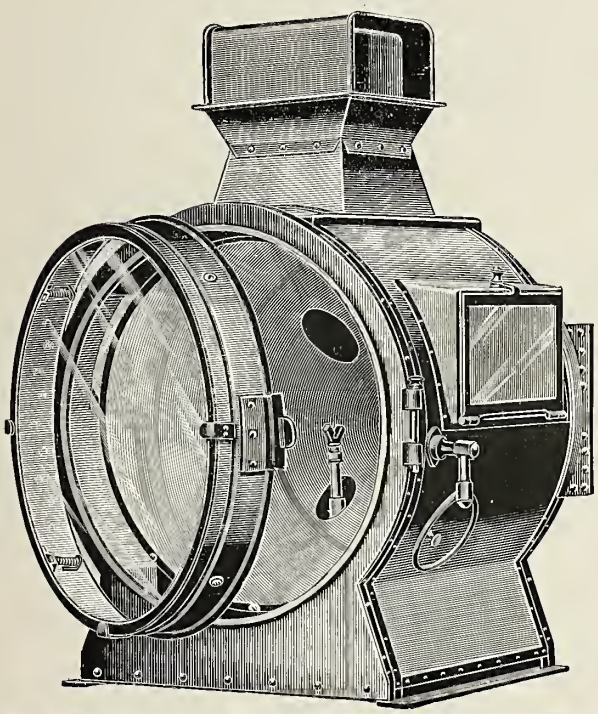

Fig. 1685—Acetylene Headlight, No. 1499-B; Adams & Westlake Company.

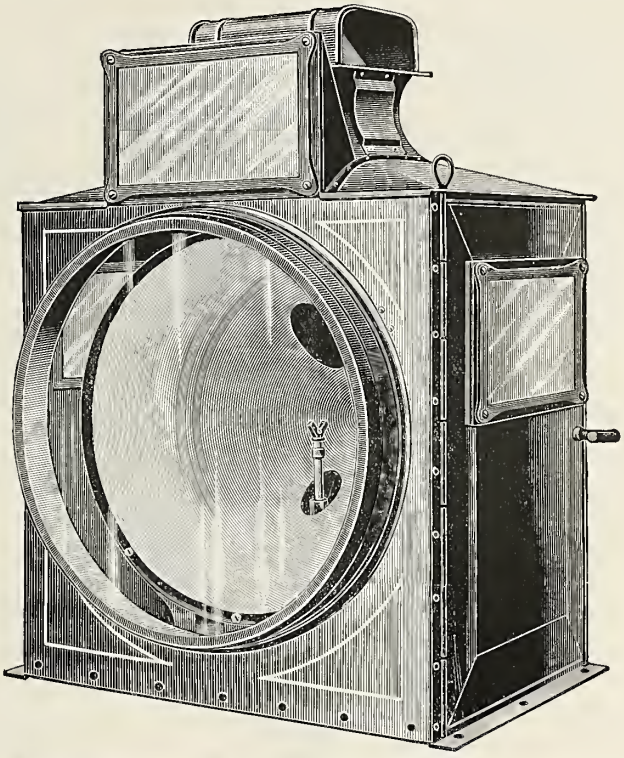

Fig. 1686—Acetylene Headlight, No. 1468-B; Adams & Westlake Company.

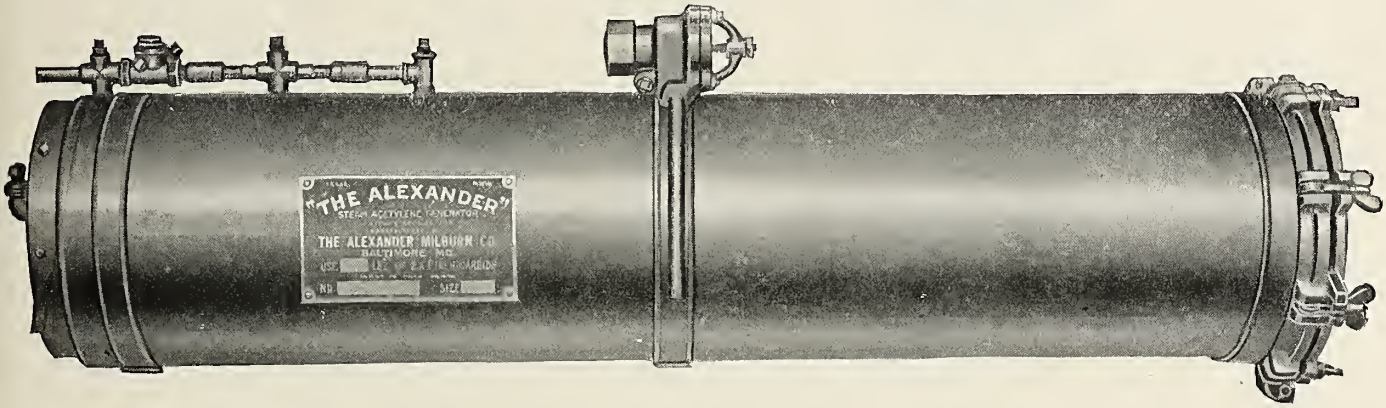

Fig. 1687—Steam Acetylene Generator for Acetylene Headlights; The Alexander Milburn Company.

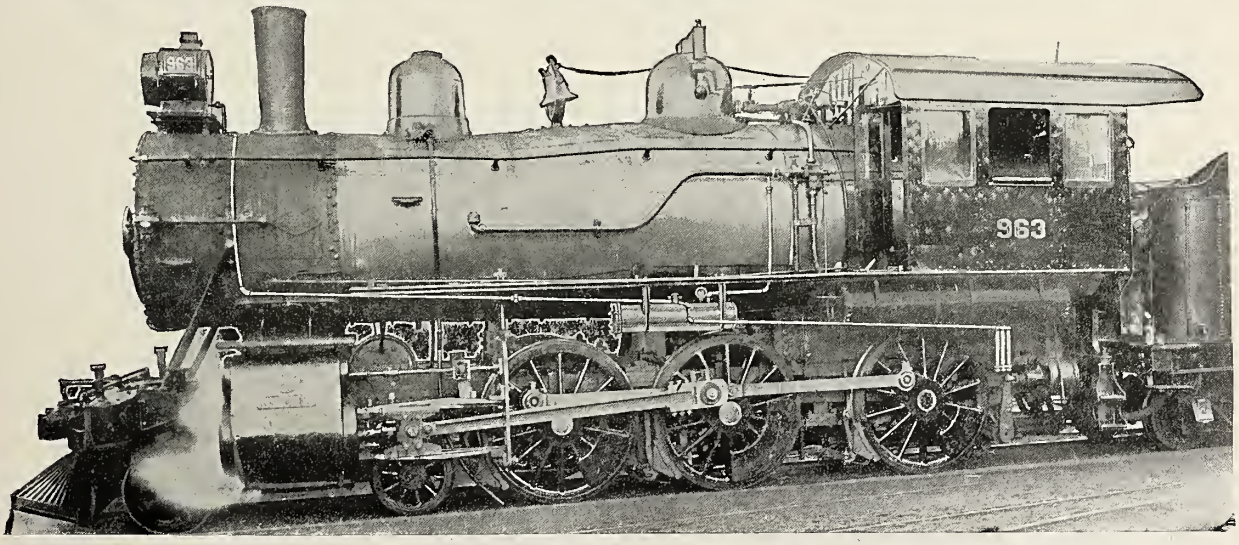

Fig. 1688—Application of Steam Acetylene Lighting Equipment Supplying Headlight, Classification Lights and Cab Lights; The Alexander Milburn Company.

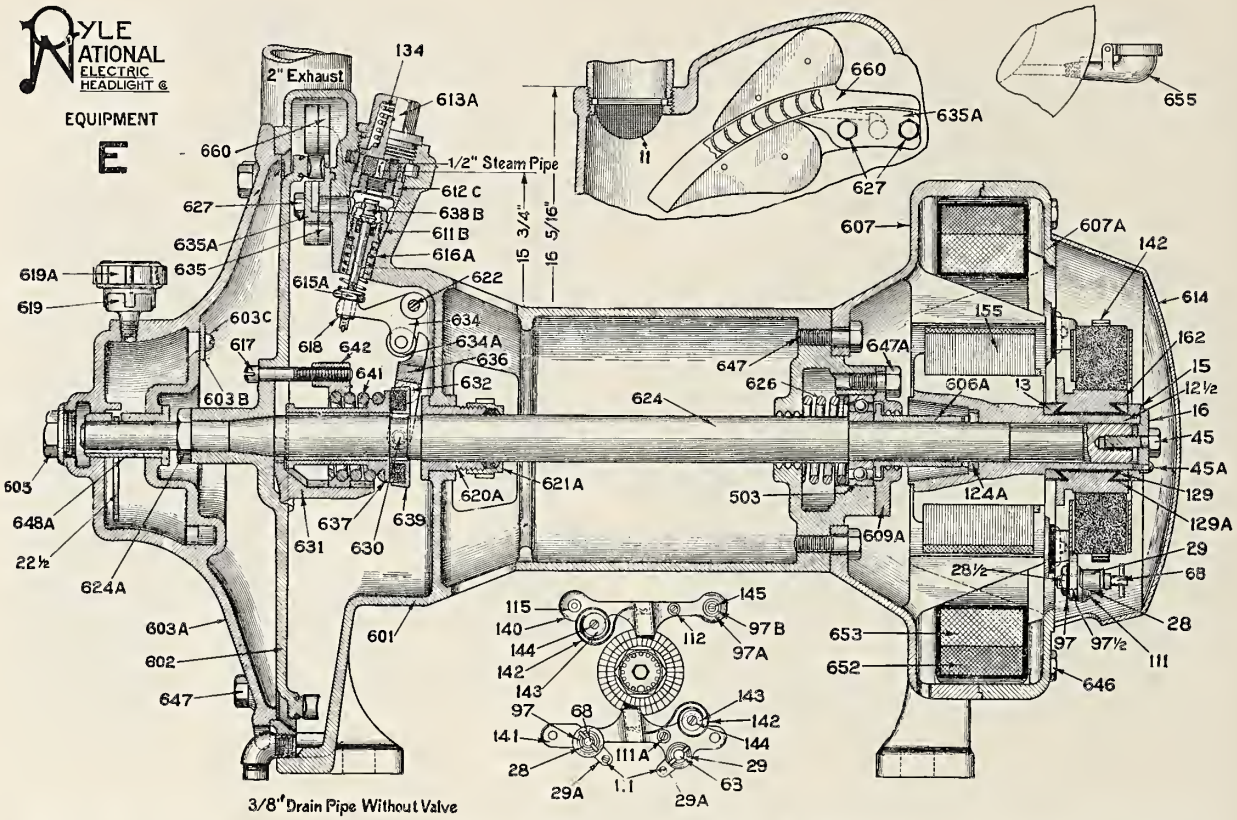

Fig. 1689—Steam Turbine and Generator for Pyle-National Electric Headlight, Type E; Pyle-National Electric Headlight Company.

Names of Parts of Turbo Generator, Fig. 1689.

11	*Exhaust Screen*
12½	*Armature Spider*
13	*Commutator Ring*
15	*Commutator Nut*
16	*Outside Washer*
22½	*Oil Ring*
28	*Binding Post, Large Hole*
28½	*Binding Post Nut*
29	*Binding Post, Small Hole*
29A	*Incandescent Terminal*
45	*Armature Lock Screw*
45A	*Small Armature Lock Screw*
97	*Insulating Washer (large)*
97A	*Insulating Washer (small)*
97B	*Brush Holder Iron Washer*
97½	*Insulating Bushing*
111	*Binding Screw*
111A	*Shunt Field Connecting Screw*
112	*Series Field Screw*
155	*Armature*
140	*Top Brush Holder*
141	*Bottom Brush Holder*
115	*Insulating Bushing*
124A	*Shaft Pin*
125	*Dynamo Brushes*
129	*Mica Taper Ring*
129A	*Mica Band Ring*
130	*Winding Ring*
130A	*Slotted Paper Armature Discs.*
134	*Valve Gage Retainer Spring*
142	*Brush Spring*
143	*Brush Spring Adjuster*
144	*Brush Adjuster Screw*
145	*Brush Holder Screw*
146	*Top Brush Holder*
147	*Bottom Brush Holder*
213	*Screw*
162	*Commutator*
600	*Turbine*
503	*Ball Bearing*
601	*Turbine Casing*
602	*Turbine Wheel*
603A	*Turbine Cover*
603B	*Oil Slot Cover*
603C	*Oil Slot Cover Screws*
606A	*Armature Sleeve*
607	*Rear Field Frame*
607A	*Front Field Frame*
609A	*Ball Bearing Cap*
611B	*Valve Cage*
612C	*Valve Cage Retainer*
613A	*Valve Cap*
614	*Dynamo Door*
614B	*Dynamo Door Pin*
614C	*Dynamo Door Latch*
614C	*Door Latch Screws*
615A	*Valve Adjusting Nut*
616A	*Governor Valve Spring*
617	*Governor Adjusting Screw*
618	*Governor Valve Lock Nut*
619	*Oil Cup*
619A	*Oil Cup Cover*
620A	*Turbine Casing Bushing*
621A	*Packing Gland*
621B	*Shaft Packing*
622	*Governor Link Screw*
624	*Shaft*
624A	*Wheel Retaining Nut*
625	*Wheel Retaining Washer*
627	*Nozzle Screw*
630	*Anti-friction Ring Holder Screw*
631	*Governor Weight*
632	*Governor Arm Screw*
633A	*Oil Cup Complete*
634	*Governor Link*
634A	*Governor Link Roller*
635	*Guide Passage Plate*
635A	*Steam Nozzle*
636	*Governor Arm*
637	*Governor Sleeve*
638B	*Governor Valve*
639	*Anti-friction Ring Holder*
641	*Governor Spring*
642	*Governor Yoke*
646	*Field Frame Screw*
647	*Turbine Screw*
647A	*Ball Bearing Cap Screw*
648A	*Bronze Bearing*
650A	*Governor Valve and Cage*
651	*Dynamo Field Coil*
652	*Shunt Field Coil*
653	*Series Field Coil*
655	*Oil Cup*
660	*Nozzle and Guide Passages*

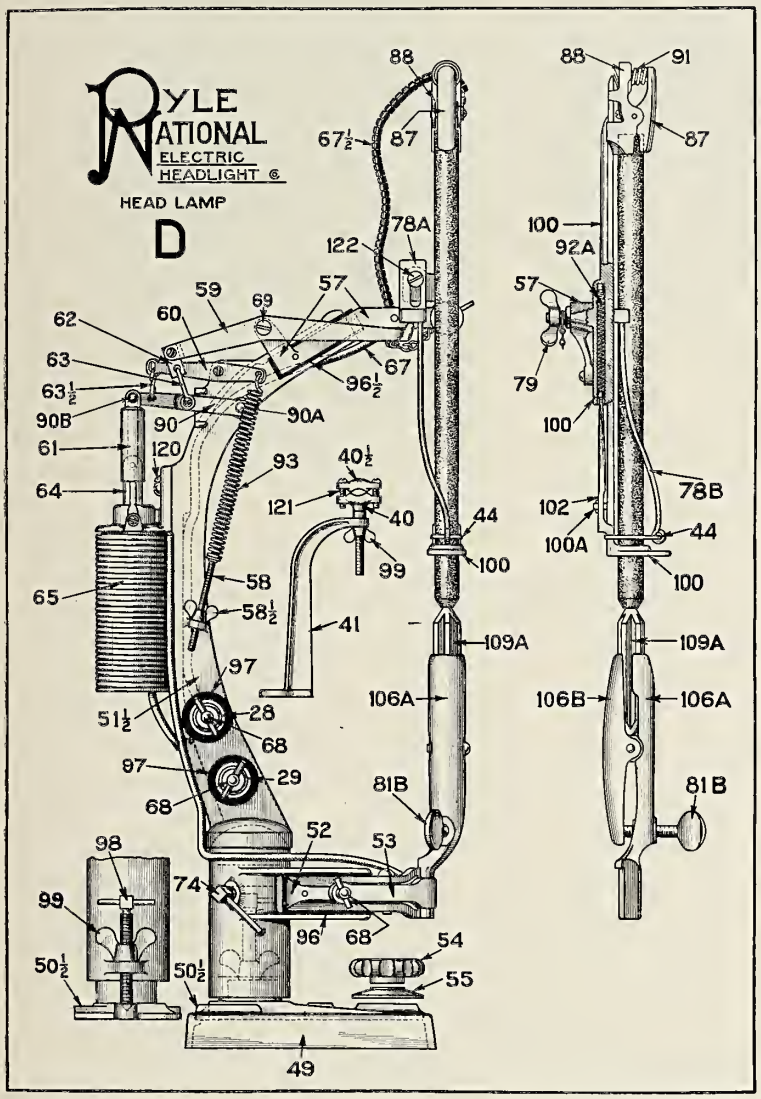

Fig. 1690—Arc Lamp for Pyle-National Electric Headlight, Type E; Pyle-National Electric Headlight Company.

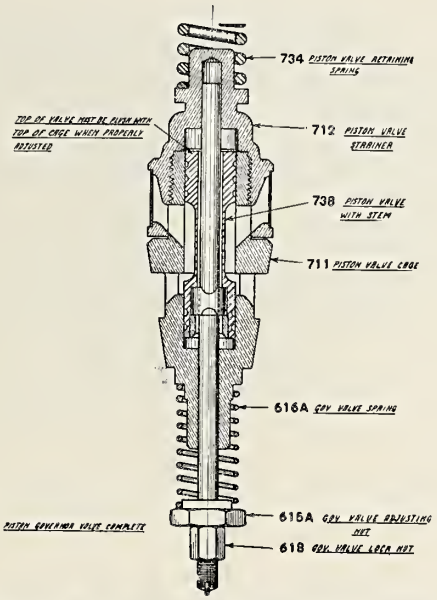

Fig. 1691—Improved Balanced Governor Valve for Pyle-National Electric Generator, Type E; Pyle-National Electric Headlight Company.

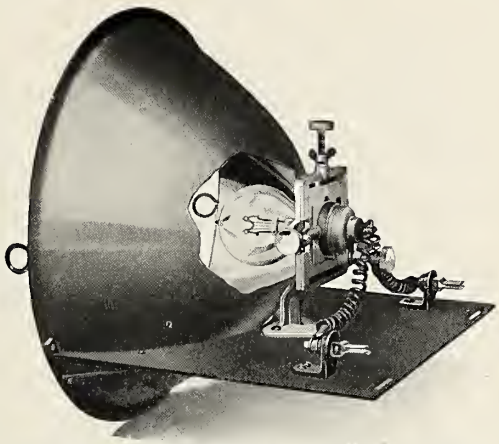

Fig. 1692—Reflector, Incandescent Lamp Stand and Lamp for Type K Equipment; Pyle-National Electric Headlight Company.

Names of Parts of Arc Lamp, Fig. 1690.

28	*Binding Post, large hole*
28A	*Washer*
29	*Binding Post, small hole*
40	*Reflector Clamp, bottom*
40½	*Reflector Clamp, top*
41	*Reflector Support*
44	*Carbon Clutch*
49	*Extension Lamp Base*
50½	*Lamp Base*
51½	*Lamp Column*
52	*Large Bottom Clamp*
53	*Small Bottom Clamp*
54	*Hand Nut*
55	*Hand Nut Washer*
57	*Top Bracket*
58	*Tension Spring Screw*
58½	*Tension Spring Screw Nut*
59	*Top Lever*
60	*Small Lever*
61	*Dash Pot*
62	*Insulating Link*
63	*Solenoid Plunger Connecting Link*
63½	*Solenoid Plunger Yoke Link*
64	*Solenoid Plunger*
64A	*Link*
65	*Solenoid*
67	*Top Positive Conductor*
67½	*Beaded Conductor*
67½A	*Screw for Beaded Conductor*
68	*Binding Post Screw*
69	*Top Lever Screw*
74	*Set Screw*
78A	*Clutch Weight*
78B	*Clutch Weight Rod*
79	*Thumb Nut*
79A	*Chain and Link*
81B	*Thumb Screw*
87	*Carbon Clamp, male*
88	*Carbon Clamp, female*
88A	*Contact Brushes*
90	*Solenoid Plunger Yoke*
90A	*Solenoid Yoke Pivot Pin*
90C	*Solenoid Yoke Cotter Pin*
90C	*Spring Cotter*
91	*Carbon Holder Spring*
92A	*Clutch Spring*
93	*Tension Spring*
93A	*Tension Spring Screw and Thumb Nut*
96	*Bottom Clamp Insulation*
96½	*Top Bracket Insulation*
97	*Insulating Washers (large)*
97A	*Insulating Washers (small)*
97½	*Insulating Bushing*
98	*Vertical Adjusting Screw*
99	*Vertical Adjusting Screw Nut*
100	*Top Carbon Holder Slide*
100A	*Top Carbon Holder Stud*
100C	*Washer*
102	*Clutch Foot*
106A	*Lower Electrode Holder Shank*
106B	*Lower Electrode Clamp*
106C	*Electrode Holder Pin*
109A	*Lower Electrode*
115	*Insulating Bushing*
120	*Solenoid Screw*
121	*Reflector Clamp Screw*
122	*Clutch Weight Shoulder Screw*
132	*Reflector Support*
200A	*Lower Electrode Holder*
300	*Upper Carbon Electrode Holder*

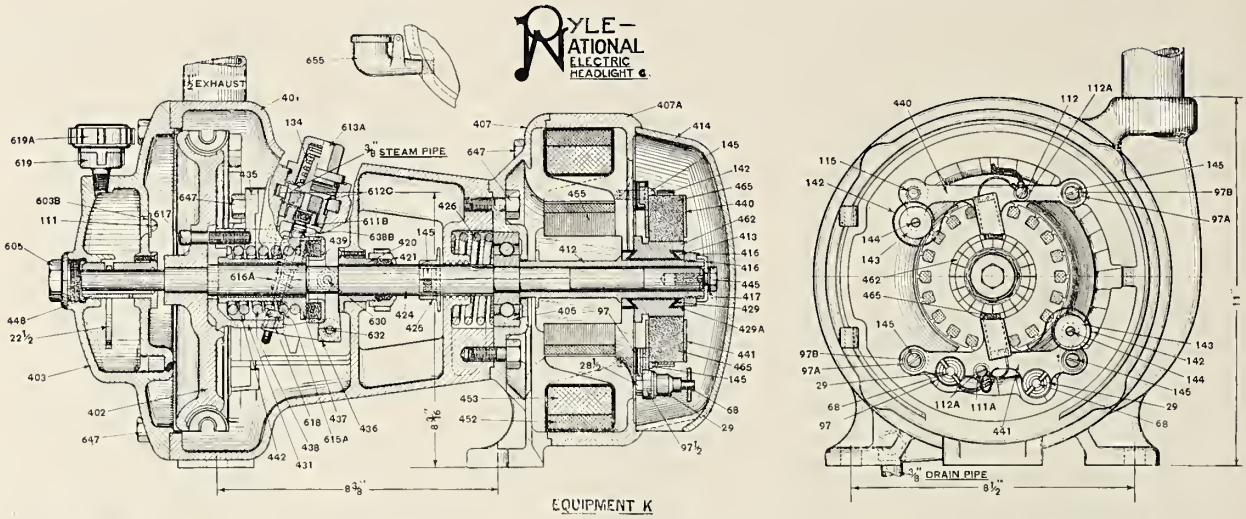

Fig. 1693—Steam Turbine and Generator for Pyle-National Electric Headlight, Type K; Pyle-National Electric Headlight Company.

Names of Parts of Turbo-Generator, Fig. 1693.

22½	*Oil Ring*
28½	*Binding Post Nut*
29	*Binding Post*
41	*Reflector Support*
68	*Binding Post Screw*
81A	*Thumb Screw (small)*
97	*Insulating Washer (large)*
97A	*Insulating Washer (small)*
97B	*Brush Holder Iron Washer*
97½	*Insulating Bushing*
111	*Oil Ring Slot Cover Screw*
111A	*Shunt Field Screw*
112	*Series Field Screw*
112A	*Tinned Iron Burrs*
115	*Brush Holder Insulating Bushing*
134	*Valve Cage Retaining Spring*
142	*Dynamo Brush Spring*
143	*Brush Spring Adjuster*
144	*Brush Spring Adjuster Screw*
145	*Brush Holder and Shaft Collar Screw*
400	*Turbine*
401	*Turbine Casing*
402	*Turbine Wheel*
403	*Turbine Cover*
405	*Ball Bearing*
407	*Rear Field Frame*
407A	*Front Field Frame*
412	*Armature Spider*
413	*Commutator Ring*
414	*Dynamo Door*
415	*Commutator Nut*
416	*Armature Drive Washer*
417	*Armature Lock Washer*
420	*Turbine Case Bushing*
421	*Packing Gland*
424	*Shaft*
425	*Shaft Collar*
429	*Mica Taper Ring*
429A	*Mica Band Ring*
430	*Armature Winding Ring*
431	*Governor Weight*
435	*Nozzle and Guide Passage*
436	*Governor Arm*
437	*Governor Sleeve*
438	*Governor Spring*
439	*Anti-friction Ring Holder*
440	*Top Brush Holder*
441	*Botton Brush Holder*
442	*Governor Yoke*
445	*Armature Lock Screw*
446	*Top Brush Holder*
447	*Bottom Brush Holder*
448	*Bronze Bearing*
451	*Dynamo Field Coils*
452	*Shunt Field Coil*
453	*Series Field Coil*
454	*Dynamo and Armature*
455	*Armature*
462	*Commutator*
465	*Commutator Brush*
470	*Incandescent Lamp Stand*
471	*Lamp Stand Base*
472	*Lamp Stand Clamp*
473	*Ball Adjuster*
474	*Lamp Stand Tube*
475	*Lamp Socket*
476	*Conductors*
477	*Large Thumb Screw*
603B	*Oil Ring Slot Cover*
605	*Turbine Cover Screw Cap*
611B	*Valve Cage*
612C	*Valve Cage Retainer*
613A	*Valve Cap*
614B	*Dynamo Door Pin*
614C	*Dynamo Door Latch*
615A	*Valve Adjusting Nut*
616A	*Valve Stem Spring*
617	*Governor Adjusting Screws*
618	*Governor Valve Lock Nut*
619	*Oil Cup*
619A	*Oil Cup Cover*
630	*Anti-friction Ring Holder Screw*
632	*Governor Arm Screw*
633A	*Oil Cup*
638B	*Governor Valve*
647	*Turbine Generator and Nozzle Screws*
650A	*Governor Valve and Cage*
655	*Oil Cup*

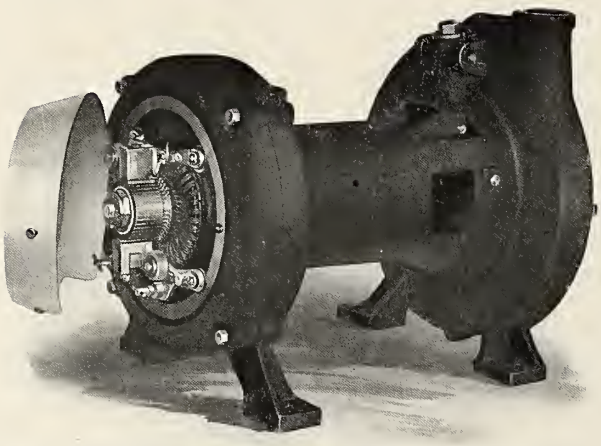

Fig. 1694—Turbo-Generator, Type E; Pyle-National Electric Headlight Company.

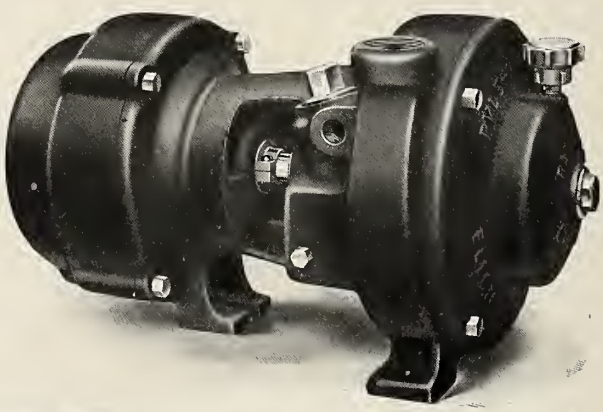

Fig. 1695—Turbo-Generator, Type K; Pyle-National Electric Headlight Company.

Fig. 1696—Golden Glow Headlight, Type L-128; The Esterline Company.

Fig. 1697—Golden Glow Headlight, Type BO-128; The Esterline Company.

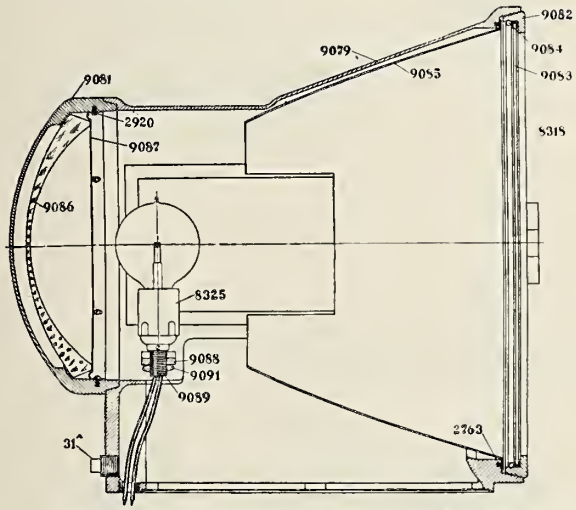

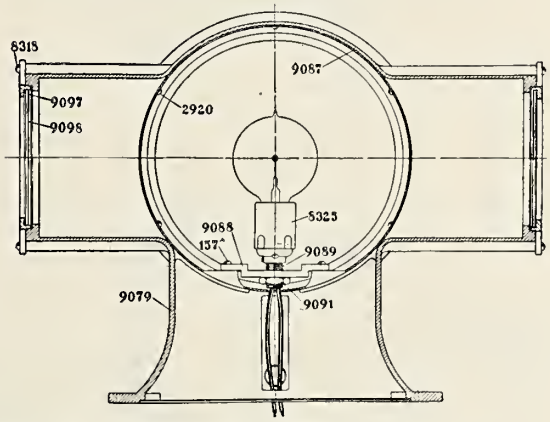

Fig. 1698—Incandescent Electric Headlight No. 9,000; Safety Car Heating and Lighting Company.

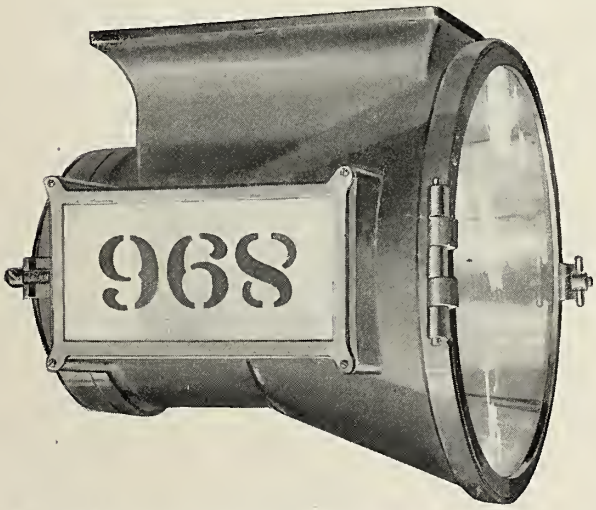

Fig. 1699—Incandescent Electric Headlight No. 9,000; Safety Car Heating & Lighting Company.

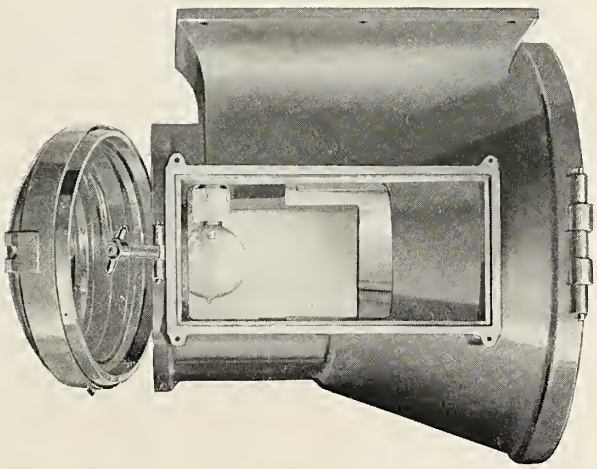

Fig. 1700—Incandescent Electric Headlight No. 9,000, Interior View; Safety Car Heating & Lighting Company.

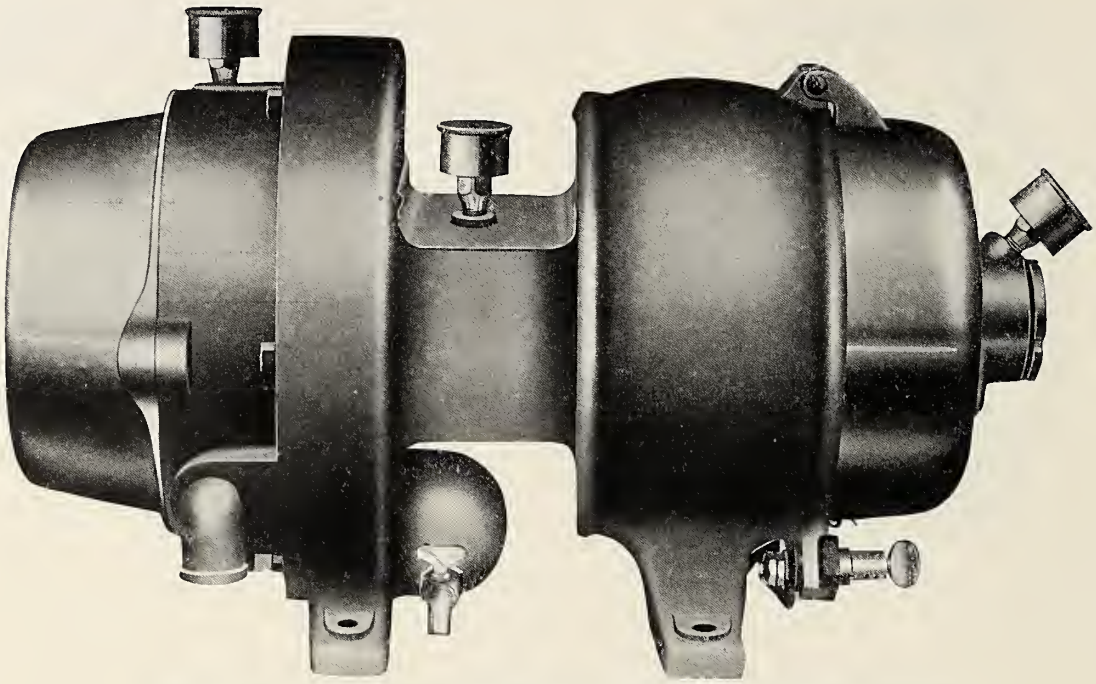

Fig. 1701—Turbo-Generator, Type R-E-2; Schroeder Headlight Company.

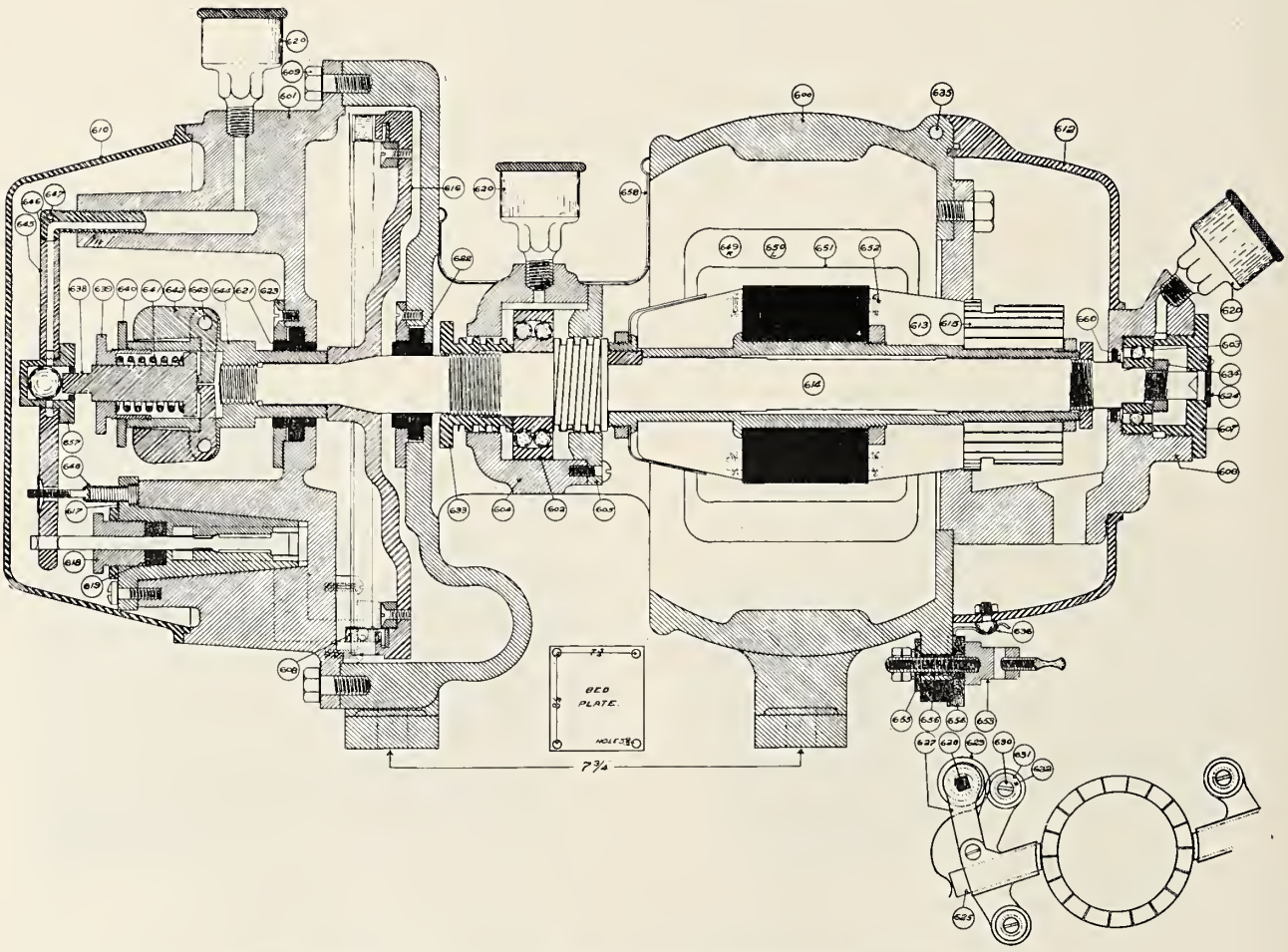

Fig. 1702—Turbo-Generator, Type R-E-2; Schroeder Headlight Company.

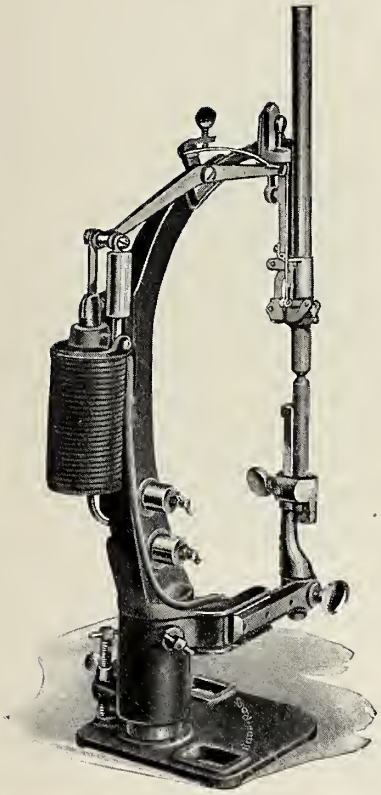

Fig. 1703—Buda-Ross Arc Lamp; The Buda Company.

Fig. 1704—Incandescent Lamp Stand; Schroeder Headlight Company.

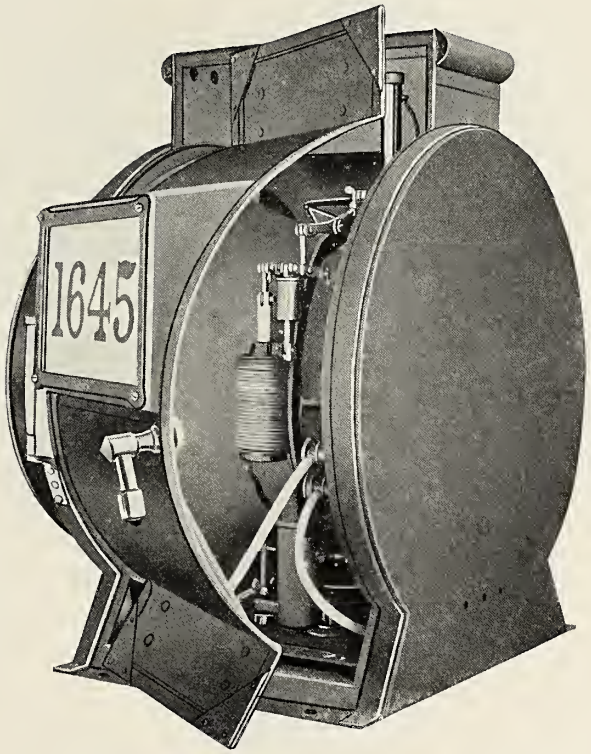

Fig. 1705—Vertical Arc Headlight, Type C; Handlan-Buck Manufacturing Company.

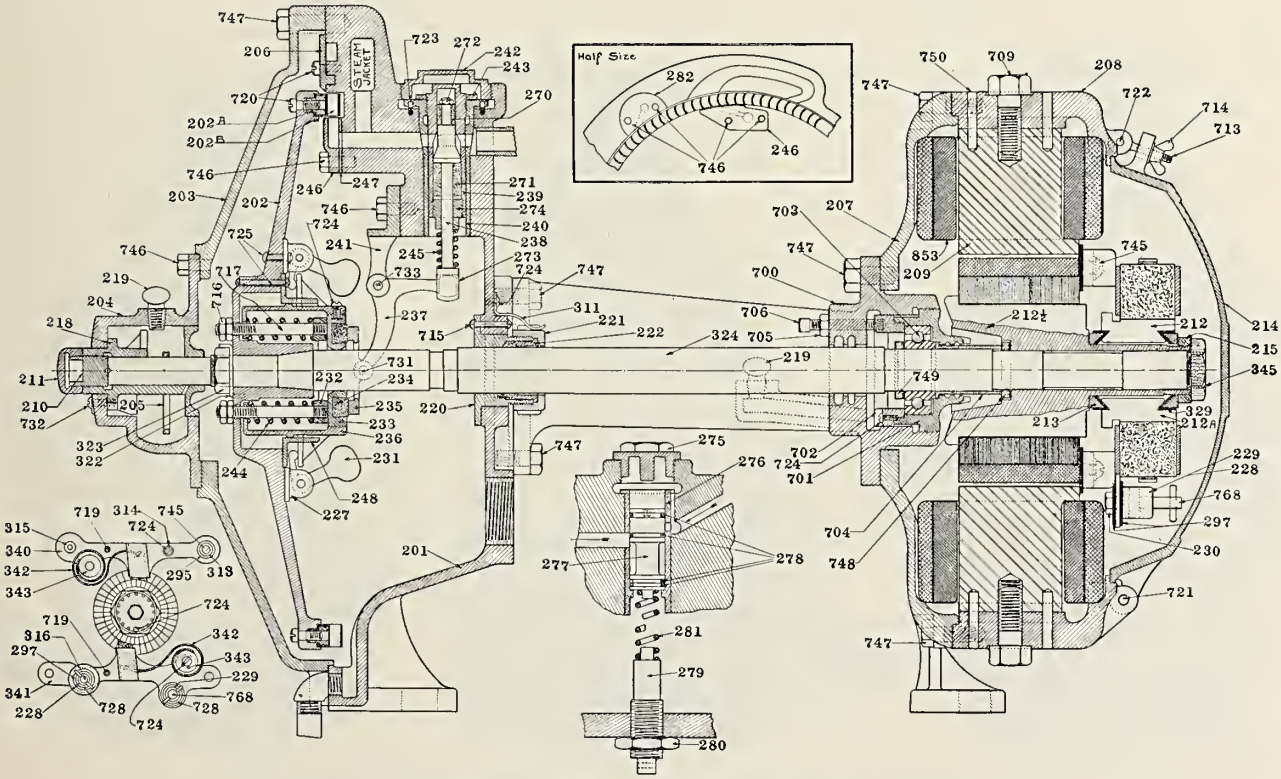

Fig. 1706—Buda-Ross Turbo-Generator; The Buda Company.

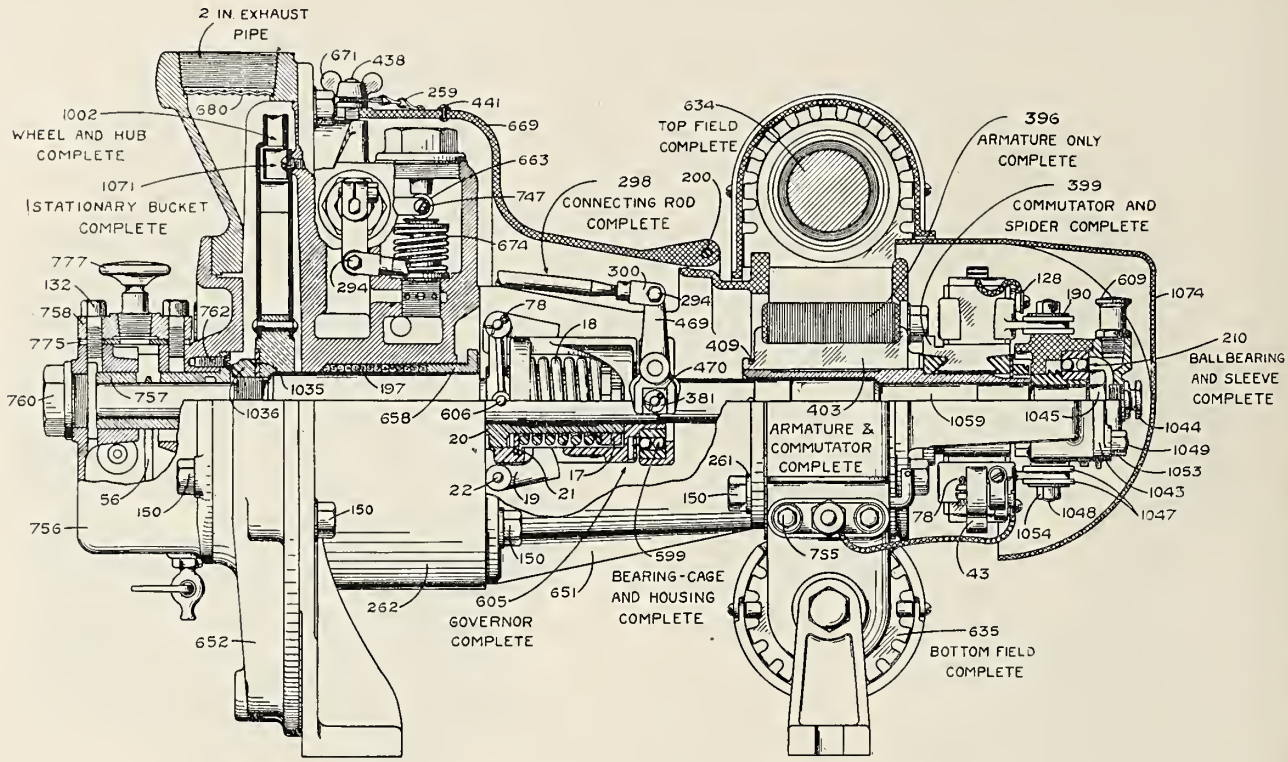

Fig. 1707—Turbo-Generator, Model D; Remy Electric Company.

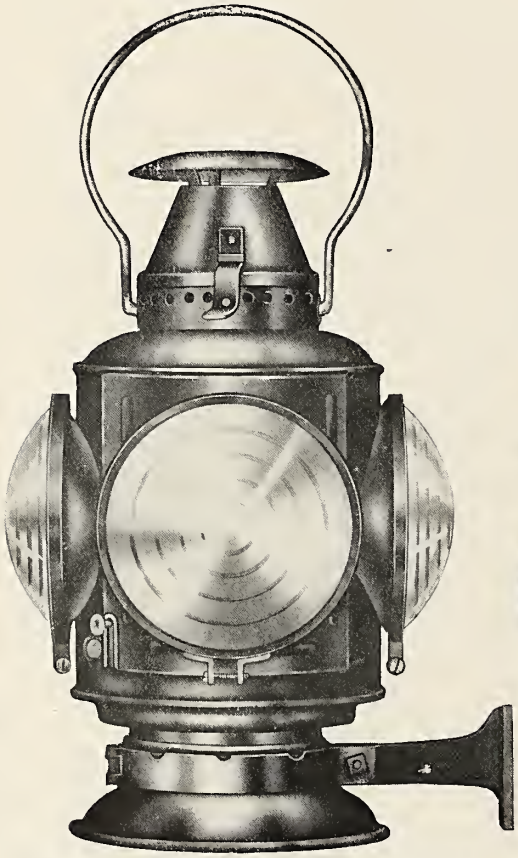

Fig. 1708—Tail Lamp No. 83; Adams & Westlake Company.

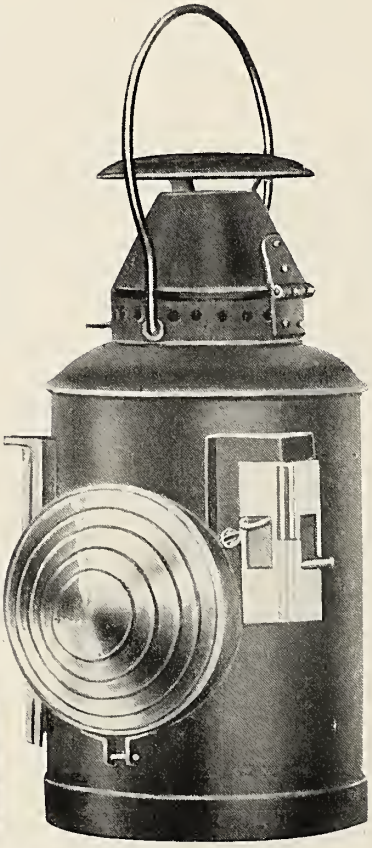

Fig. 1709—Tender Marker No. 205; Adams & Westlake Company.

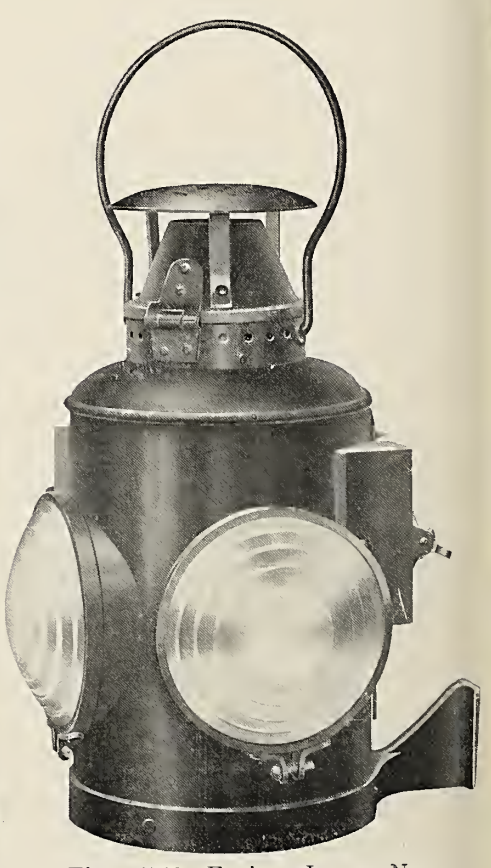

Fig. 1710—Engine Lamp No. 187½; Adams & Westlake Company.

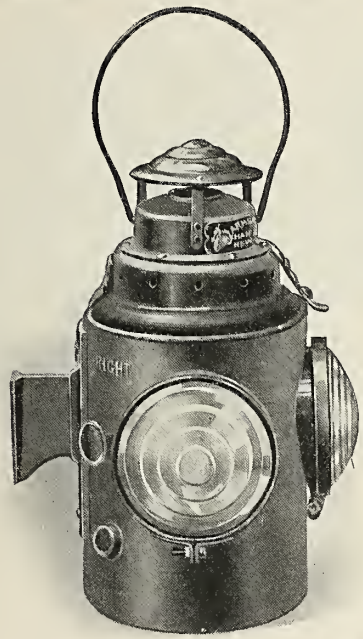

Fig. 1711—Straight Body Steel Engine Classification Lamp; Armspear Manufacturing Company.

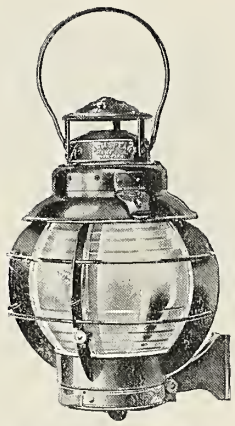

Fig. 1712—Classification Lamp No. 420; Armspear Manufacturing Company.

Fig. 1713 — Marker Lamp No. 430; Armspear Manufacturing Company.

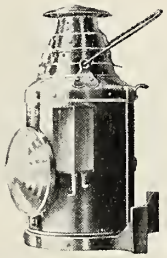

Fig. 1714—Automatic Classification Lamp No. 175; Dressel Railway Lamp Works.

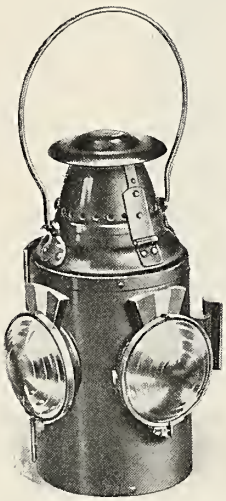

Fig. 1715—Engine Classification Lantern with Automatic Color Change Device for Red, Green and White; Peter Gray & Sons.

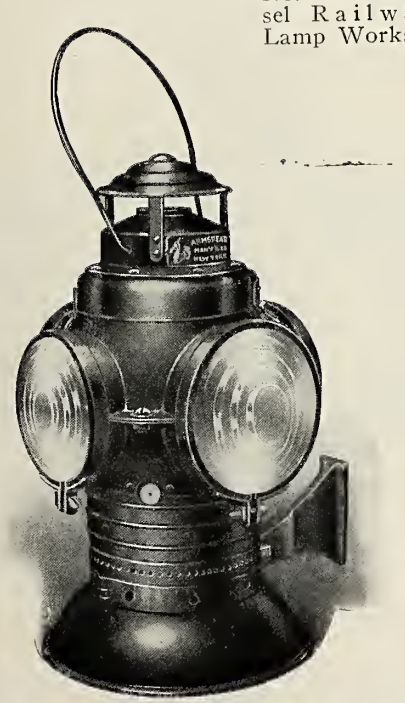

Fig. 1716—Four Lens Marker Lamp No. 58; Armspear Manufacturing Company.

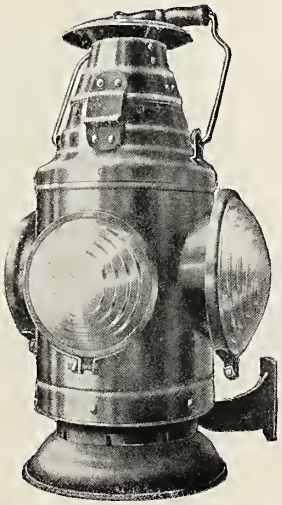

Fig. 1717—Tail Marker Lamp No. 166; Dressel Railway Lamp Works.

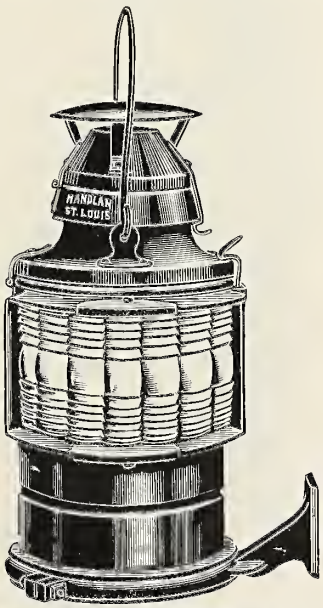

Fig. 1718—Radius Engine Lamp No. 26; Handlan-Buck Manufacturing Company.

Fig. 1719—Water Gage Lamp; Peter Gray & Sons.

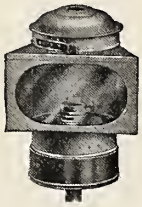

Fig. 1720—Steam Gage Lamp; Peter Gray & Sons.

Fig. 1721—Gage Lamp; Armspear Manufacturing Company.

Fig. 1722—Water Gage Lamp; F. H. Lovell & Company.

Fig. 1723—Water Gage Lamp No. 126; Dressel Railway Lamp Works.

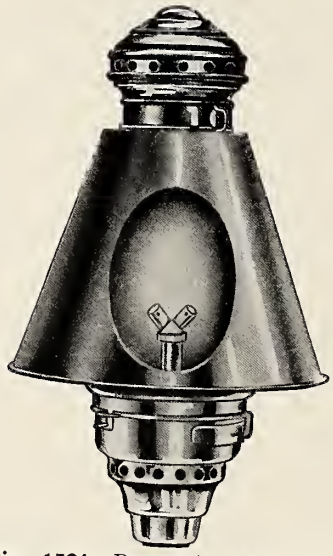

Fig. 1724—Brass Acetylene Gage Lamp; Dressel Railway Lamp Works.

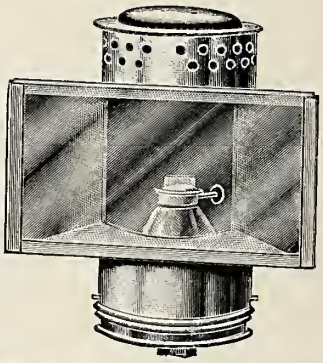

Fig. 1725—Steam Gage Lamp; Handlan-Buck Manufacturing Company.

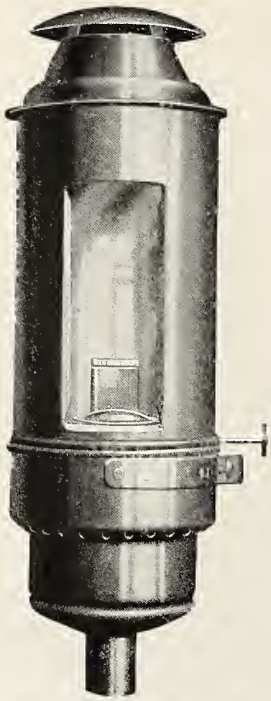

Fig. 1726—Water Gage Lamp; Adams & Westlake Company.

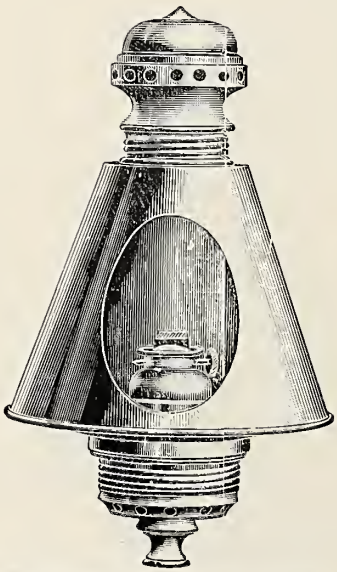

Fig. 1727—Steam Gage Lamp; F. H. Lovell & Company.

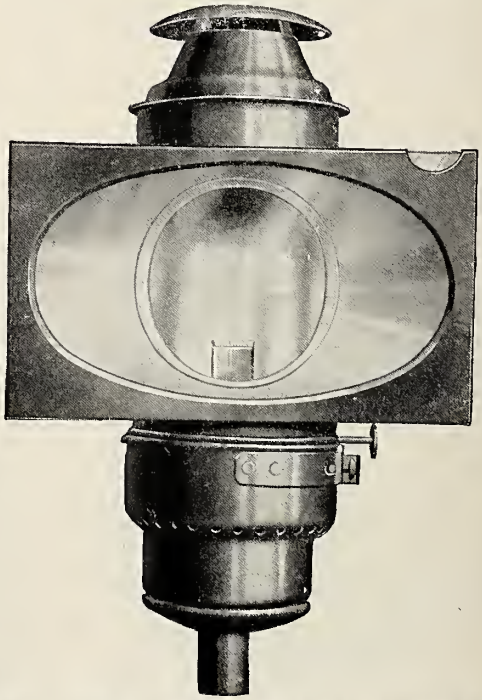

Fig. 1728—Steam Gage Lamp; Adams & Westlake Company.

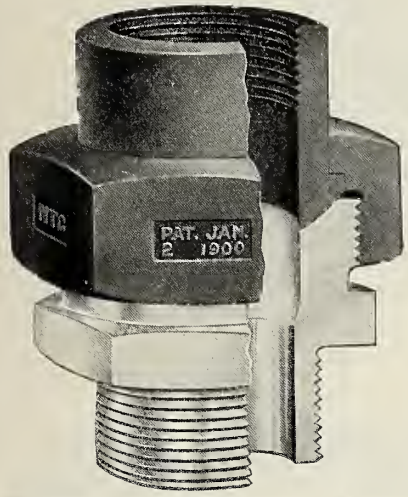

Fig. 1729—Kewanee Air Pump Union; National Tube Company.

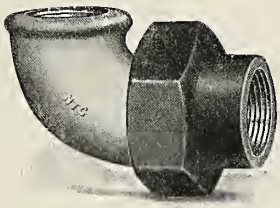

Fig. 1730—Kewanee Union Ell; National Tube Company.

Fig. 1731—Kewanee Union Tee; National Tube Company.

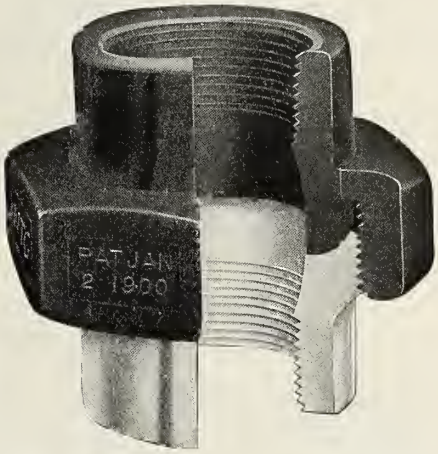

Fig. 1732—Kewanee Union; National Tube Company.

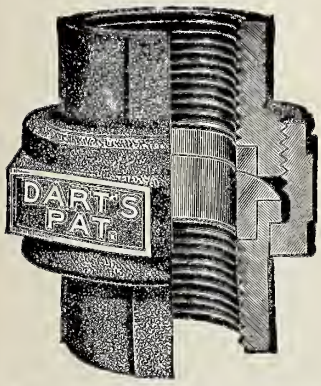

Fig. 1733—Dart Union with Two Bronze Seats; E. M. Dart Manufacturing Company.

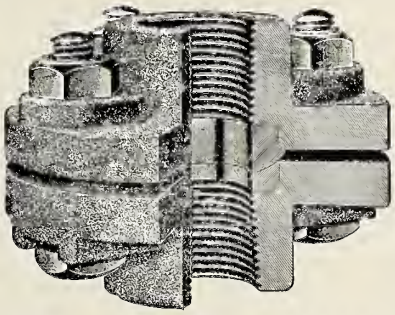

Fig. 1734—Dart Flange Union; E. M. Dart Manufacturing Company.

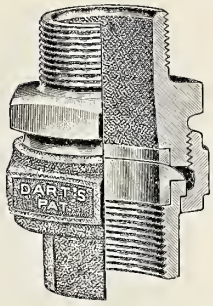

Fig. 1735—Dart Air Compressor Union with Two Bronze Seats; E. M. Dart Manufacturing Company.

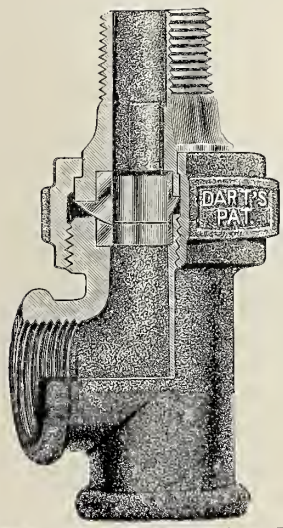

Fig. 1736—Dart Union Tee, End Outlet; E. M. Dart Manufacturing Company.

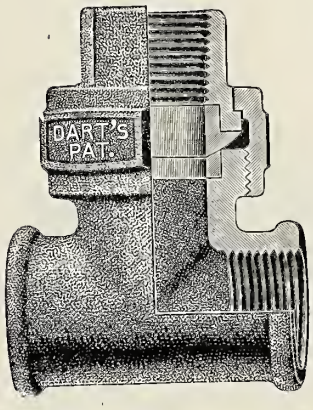

Fig. 1737—Dart Union Tee, Side Outlet; E. M. Dart Manufacturing Company.

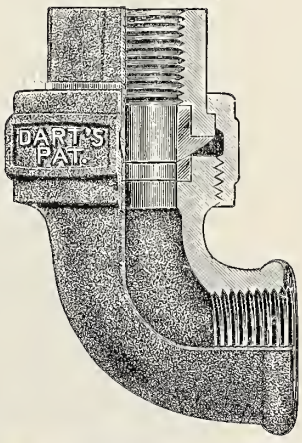

Fig. 1738—Dart Union Elbow with Two Bronze Seats; E. M. Dart Manufacturing Company.

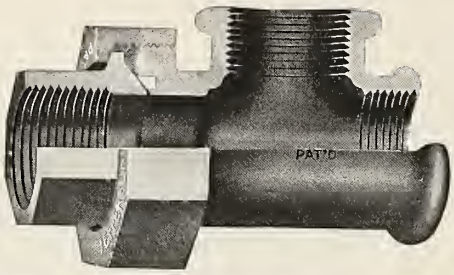

Fig. 1739—Jefferson Union Tee with Brass Seat Ring; Jefferson Union Company.

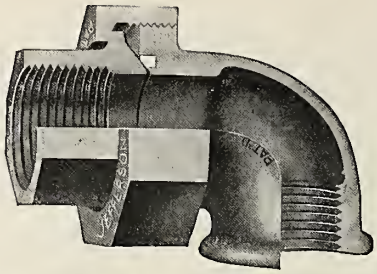

Fig. 1740—Jefferson Union Elbow with Brass Seat Ring; Jefferson Union Company.

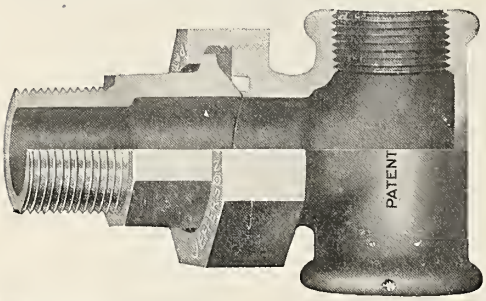

Fig. 1741—Jefferson Union Tee with Brass Seat Ring; Jefferson Union Company.

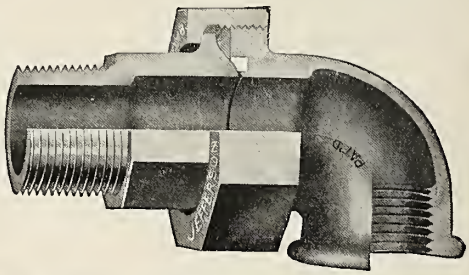

Fig. 1742—Jefferson Union Elbow with Brass Seat Ring; Jefferson Union Company.

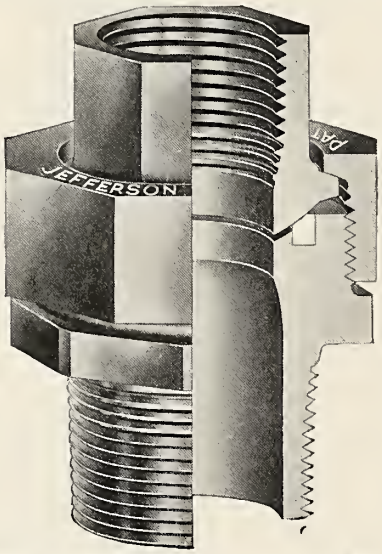

Fig. 1743—Jefferson Male and Female Reducing Union with Brass Seat Ring; Jefferson Union Company.

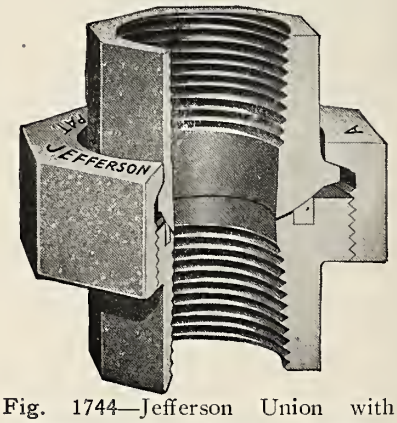

Fig. 1744—Jefferson Union with Brass Seat Ring; Jefferson Union Company.

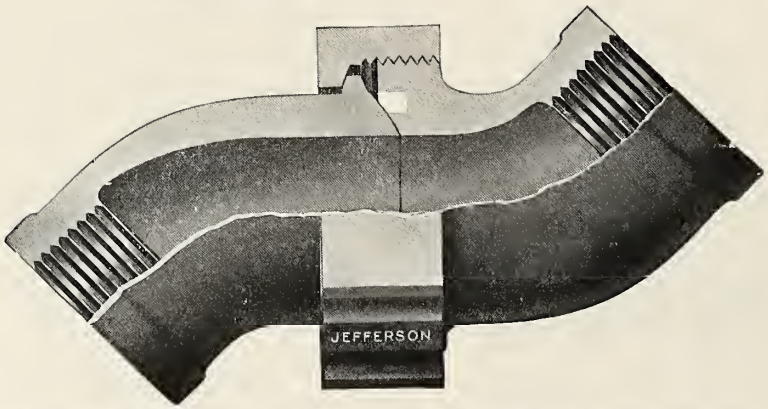

Fig. 1745—Jefferson Swing Union with Spherical Brass to Iron Ground Joint; Jefferson Union Company.

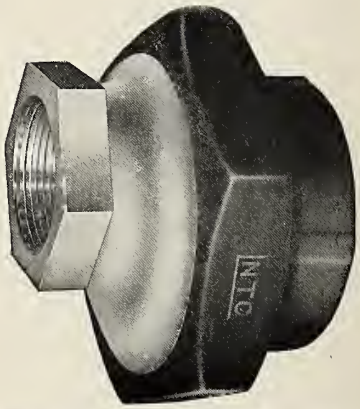

Fig. 1746—Kewanee Eccentric Union; National Tube Company.

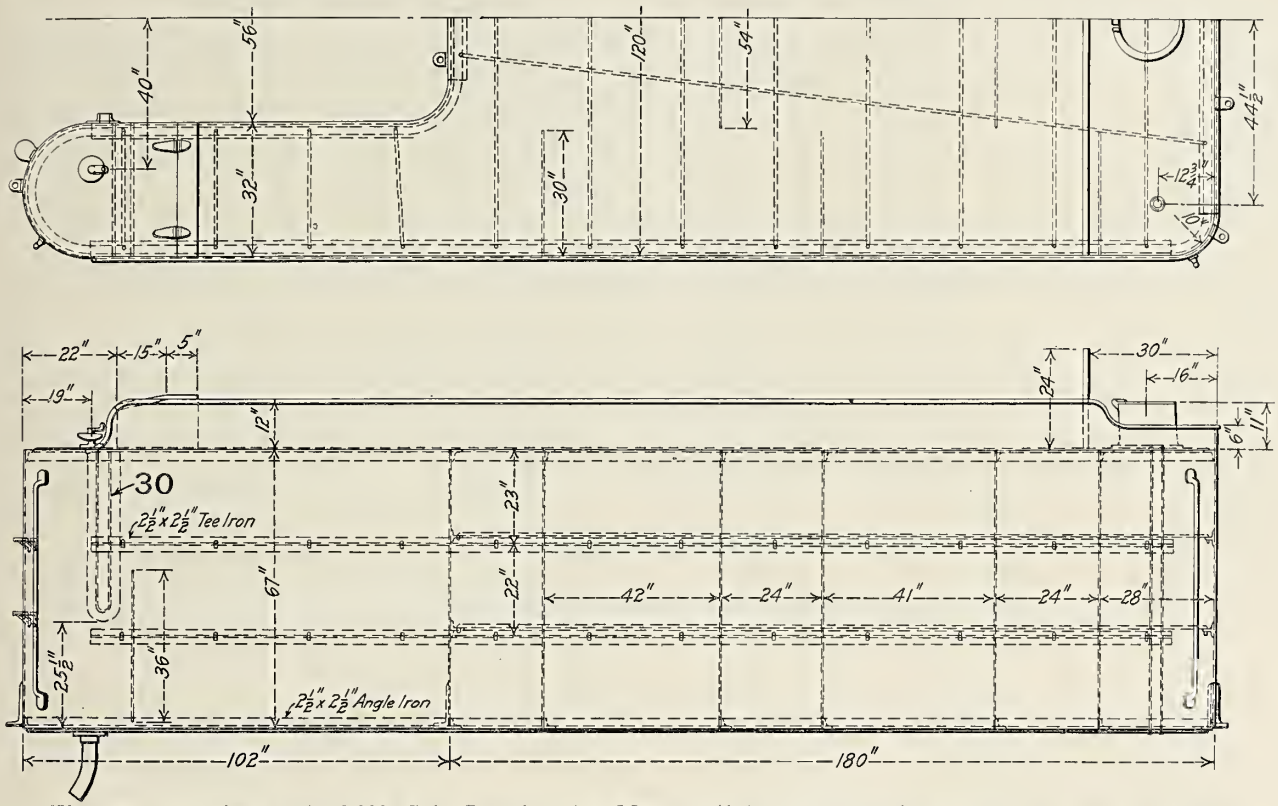

Fig. 1747—Tender Tank, 8,000 Gal. Capacity, for Mikado (2-8-2) Locomotive. Built for the Ray Consolidated Copper Company by the Baldwin Locomotive Works.

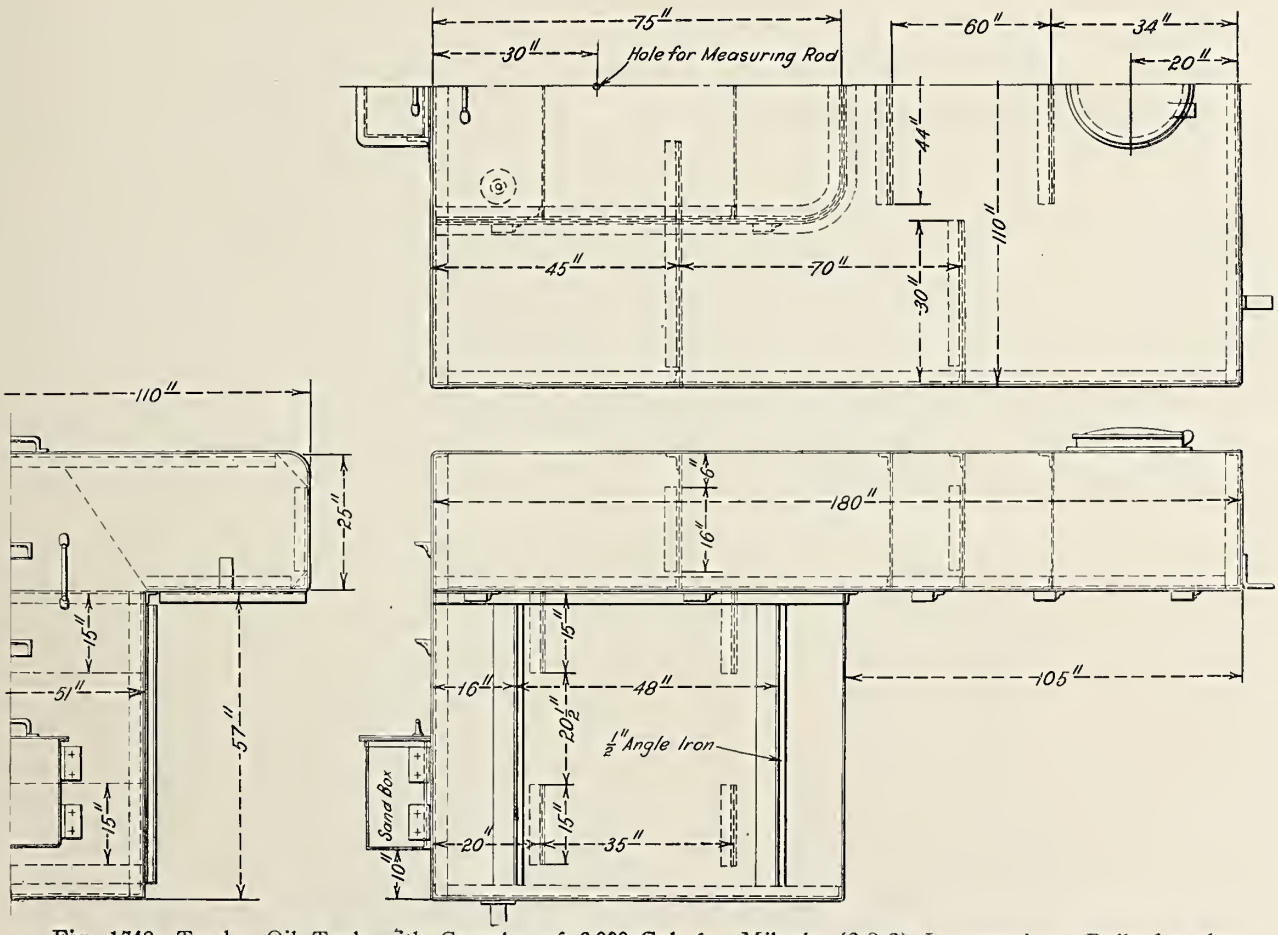

Fig. 1748—Tender Oil Tank with Capacity of 3,000 Gal. for Mikado (2-8-2) Locomotive. Built for the Ray Consolidated Copper Company by the Baldwin Locomotive Works.

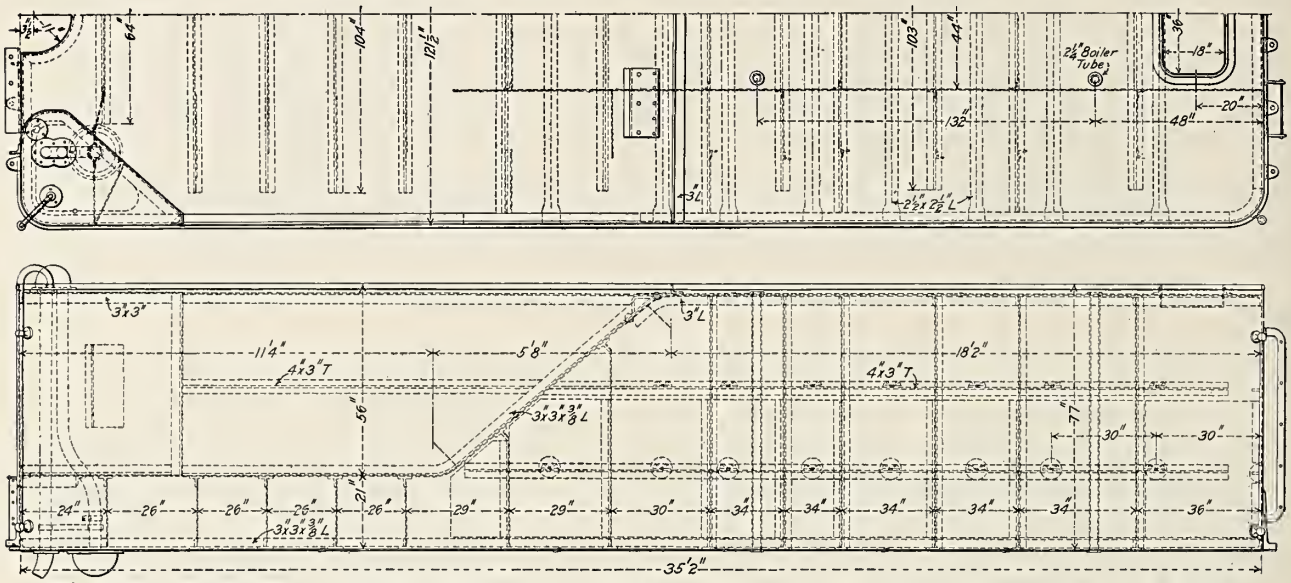

Fig. 1749—Tender Tank, 12,000 Gal. Capacity, for Mallet Articulated Compound Locomotive. Built for the Atchison, Topeka & Santa Fe by the Baldwin Locomotive Works.

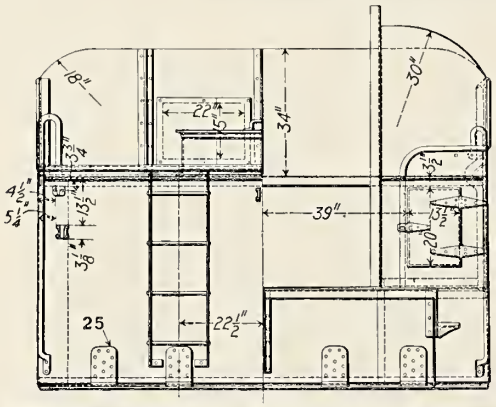

Fig. 1750—Cross Section of Tender Tank Shown in Fig. 1752.

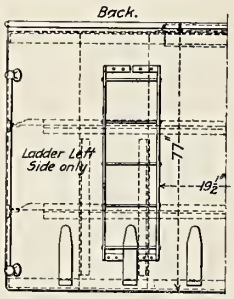

Fig. 1751—Rear View of Tender Tank Shown in Fig. 1749.

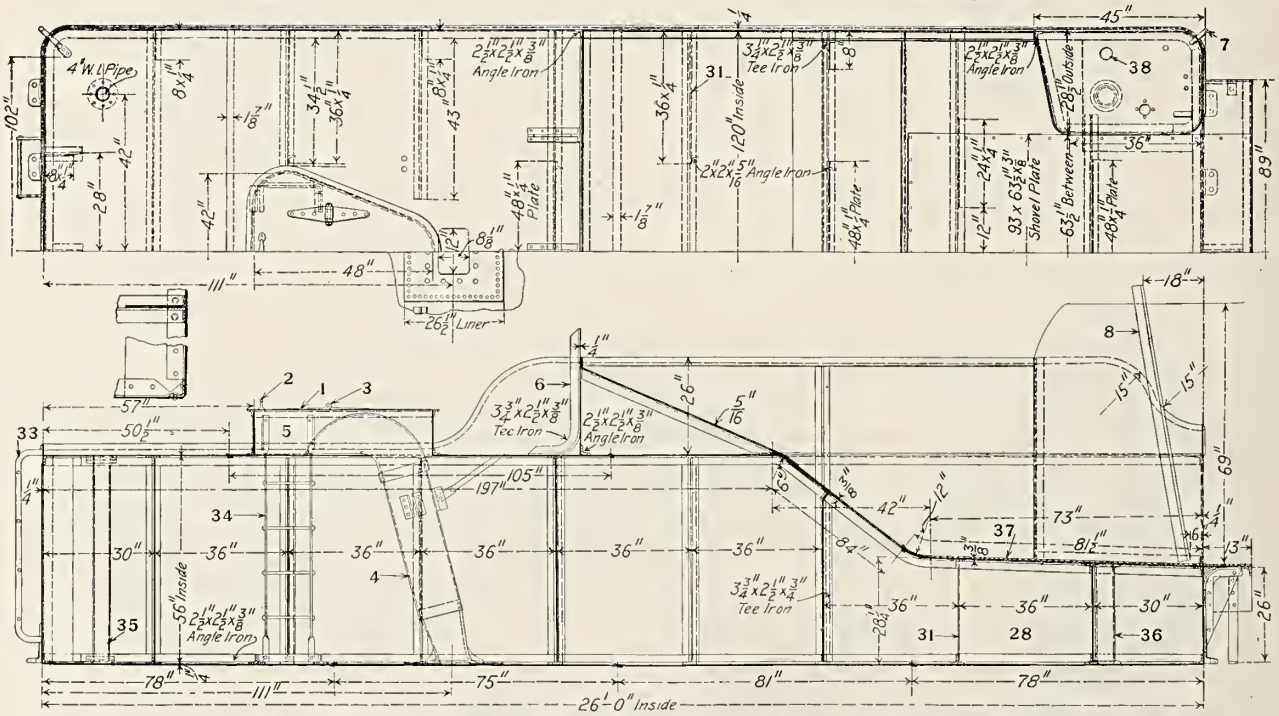

Fig. 1752—Tender Tank, 7,500 Gal. Capacity, for Pacific Type (4-6-2) Locomotive. Built for the New York Central & Hudson River by the American Locomotive Company.

Numbers Refer to Names of Parts on Page 654.

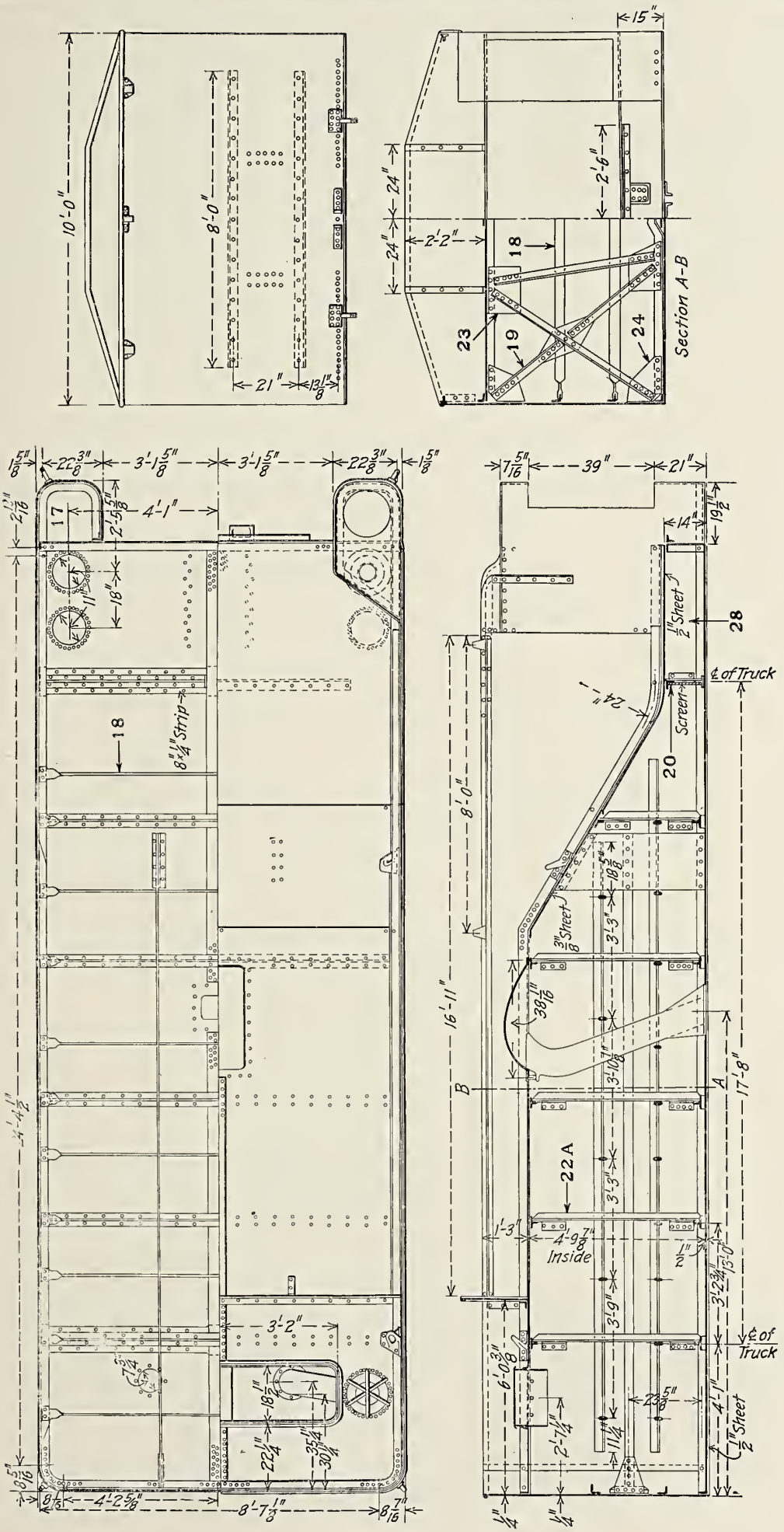

Fig. 1753—Tender Tank, 7,000 Gal. Capacity, for Atlantic Type (4-4-2) Locomotive; Pennsylvania Railroad.

Numbers Refer to Names of Parts on Page 654.

Names of Parts of Tender Tanks, Figs. 1747-1757 and Fig. 1817.

1 *Manhole Cover*
2 *Manhole Cover Handle*
3 *Manhole Cover Hinge*
4 *Internal Water Scoop Pipe*
5 *Manhole*
6 *Shield for Manhole*
7 *Tank Hand Hold*
8 *Guide for Coal Boards*
10 *Tender Side Sills*
11 *Tender Step*
14 *Chafing Plate*
17 *Water Leg of Tender*
18 *Tank Cross Brace*
19 *Tank Diagonal Brace*
20 *Tank Screen*
21 *Tank Screen Angle*
22a *Vertical Brace*
23 *Vertical Brace Plate*
24 *Tank Corner Brace Plates*
25 *Back Lug for Tank*
28 *Water Bottom*
30 *Coal Board Slides*
31 *Splash Plate*
33 *Rear Tank Ladder*
34 *Tank Ladder*
35 *Drain Pipe*
36 *Water Scoop Air Piping Casing*
37 *Shovel Plate*
38 *Vent Pipe Hole*

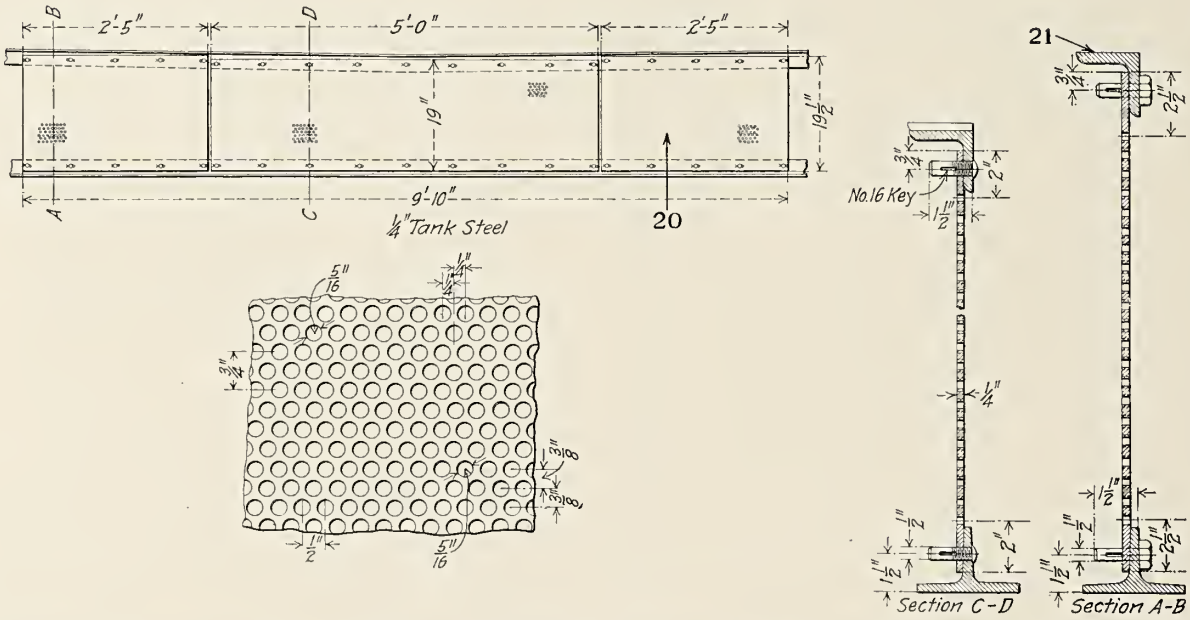

Fig. 1754—Arrangement of Tank Screen on Tender of Atlantic Type (4-4-2) Locomotive; Pennsylvania Railroad.

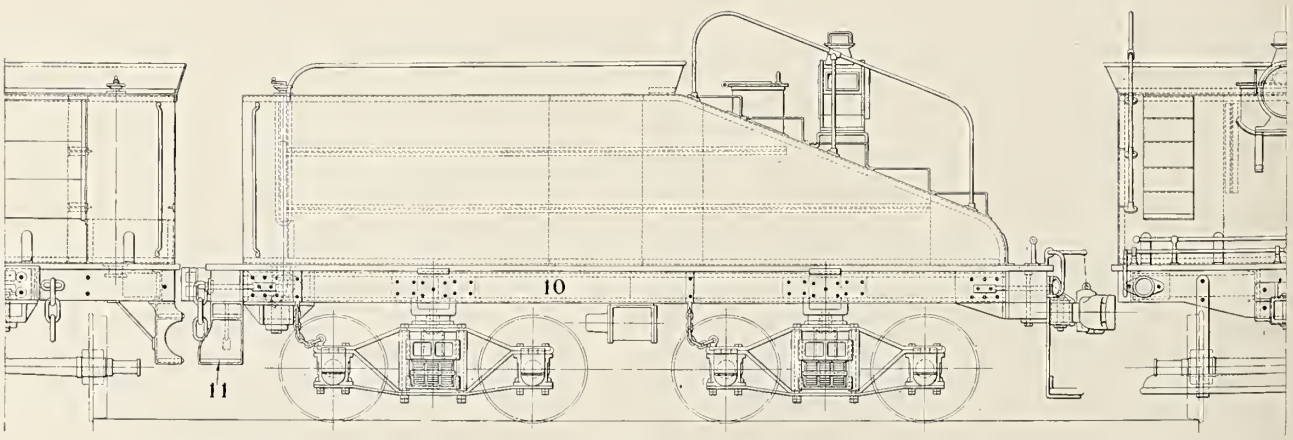

Fig. 1755—Switching Tender with Sloping Back Tank; Baldwin Locomotive Works.

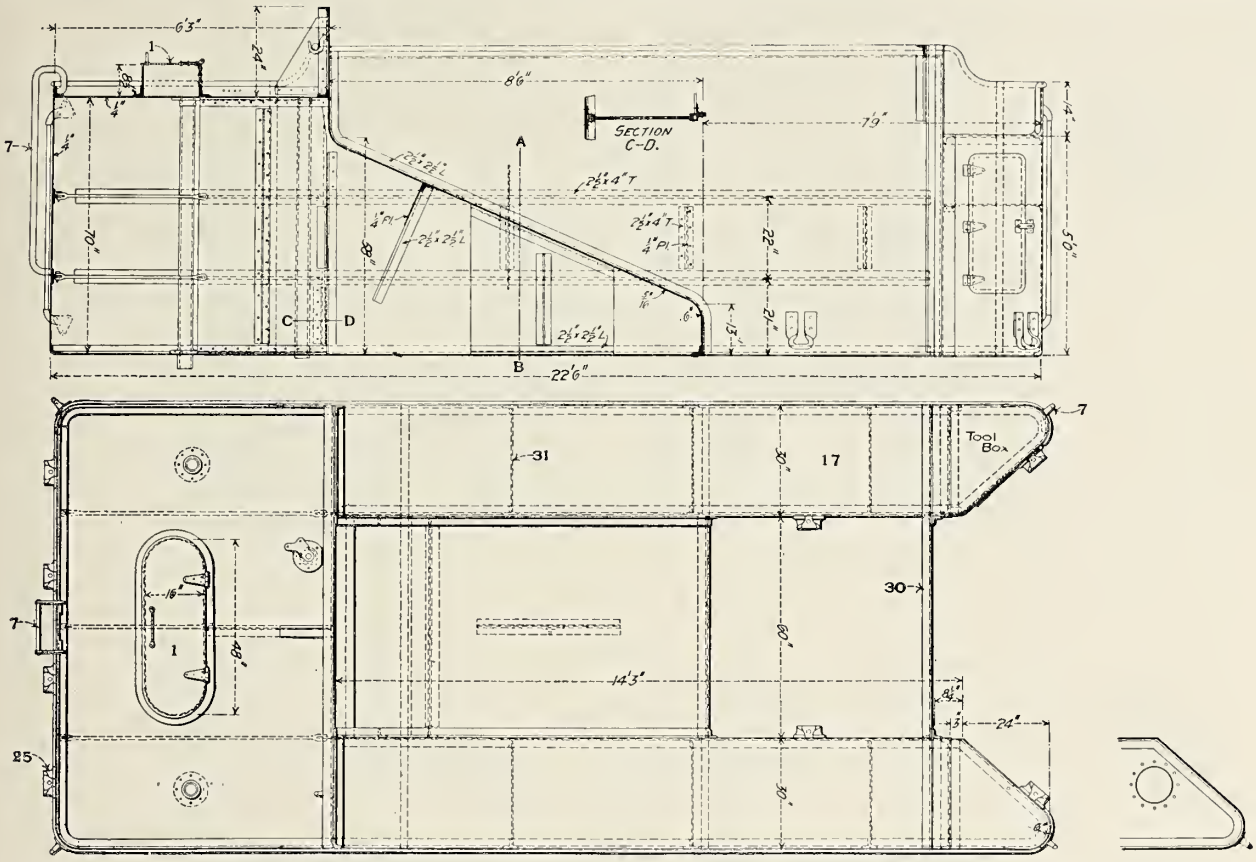

Fig. 1756—Tender Tank of 7,000 Gal. Capacity; Louisville & Nashville.

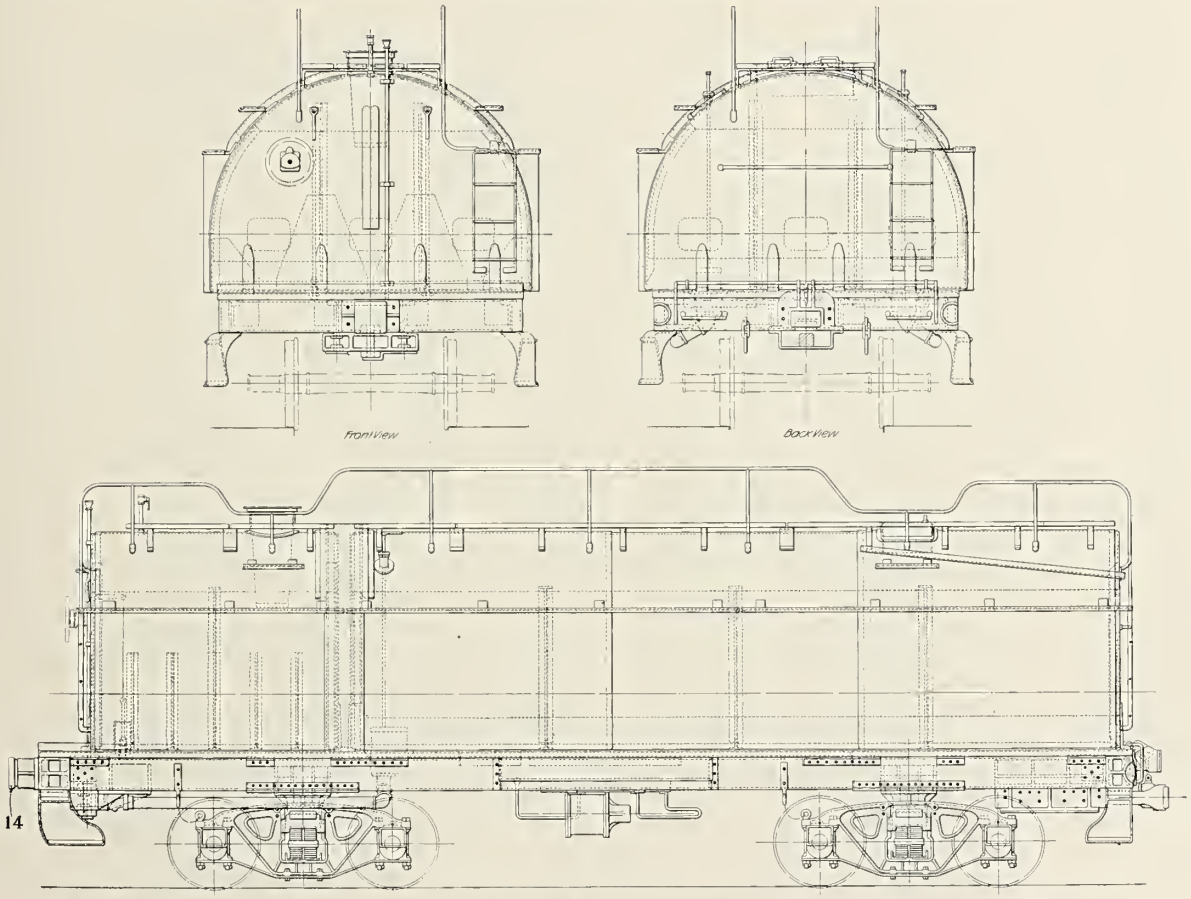

Fig. 1757—Tender with Semi-Cylindrical Oil and Water Tanks; Baldwin Locomotive Works.

Numbers Refer to Names of Parts on Page 654.

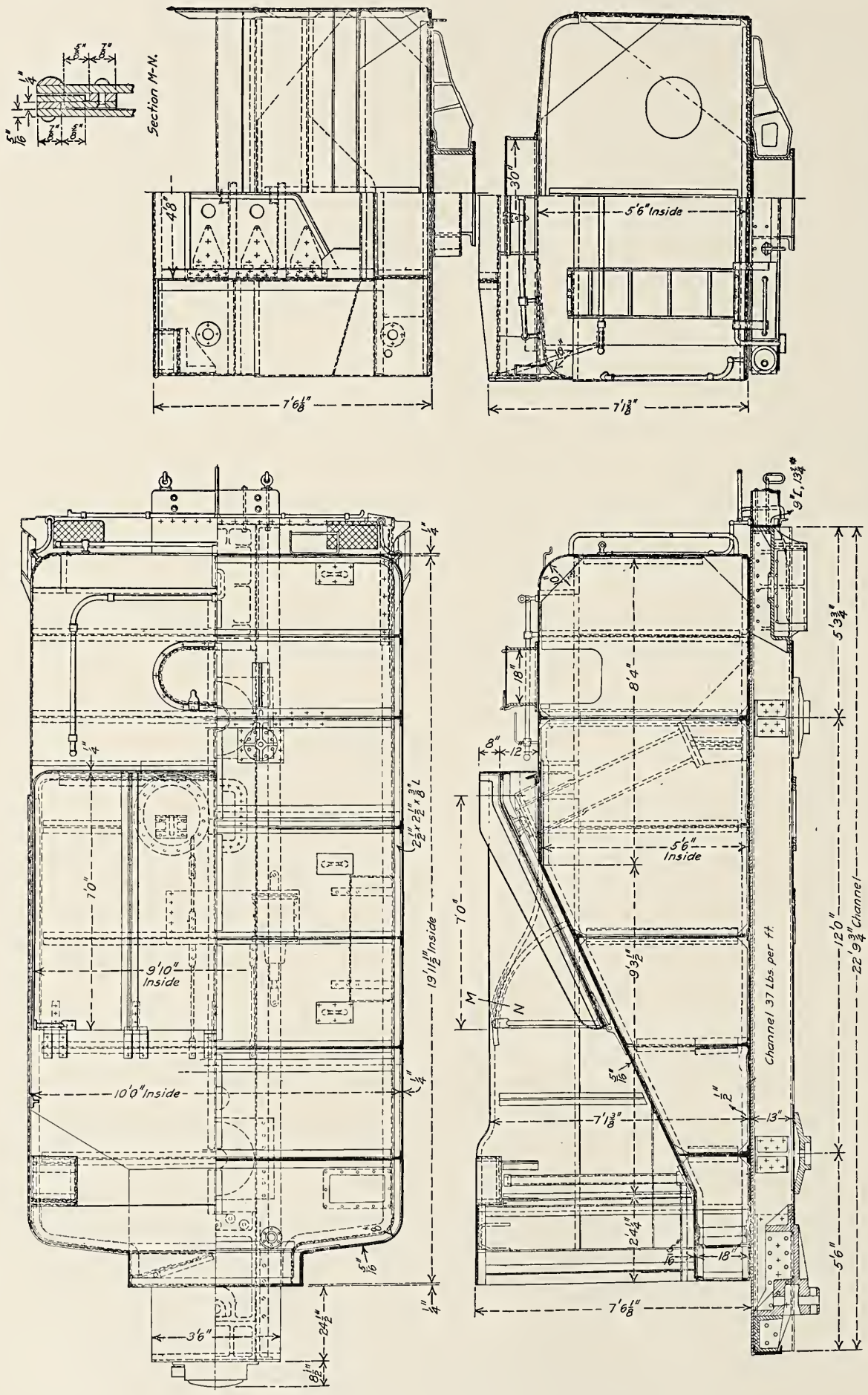

Fig. 1758—Tender Tank, 6,000 Gal. Capacity, Used in Connection with a Vestibule Cab on Pacific Type (4-6-2) Locomotive; Canadian Pacific.

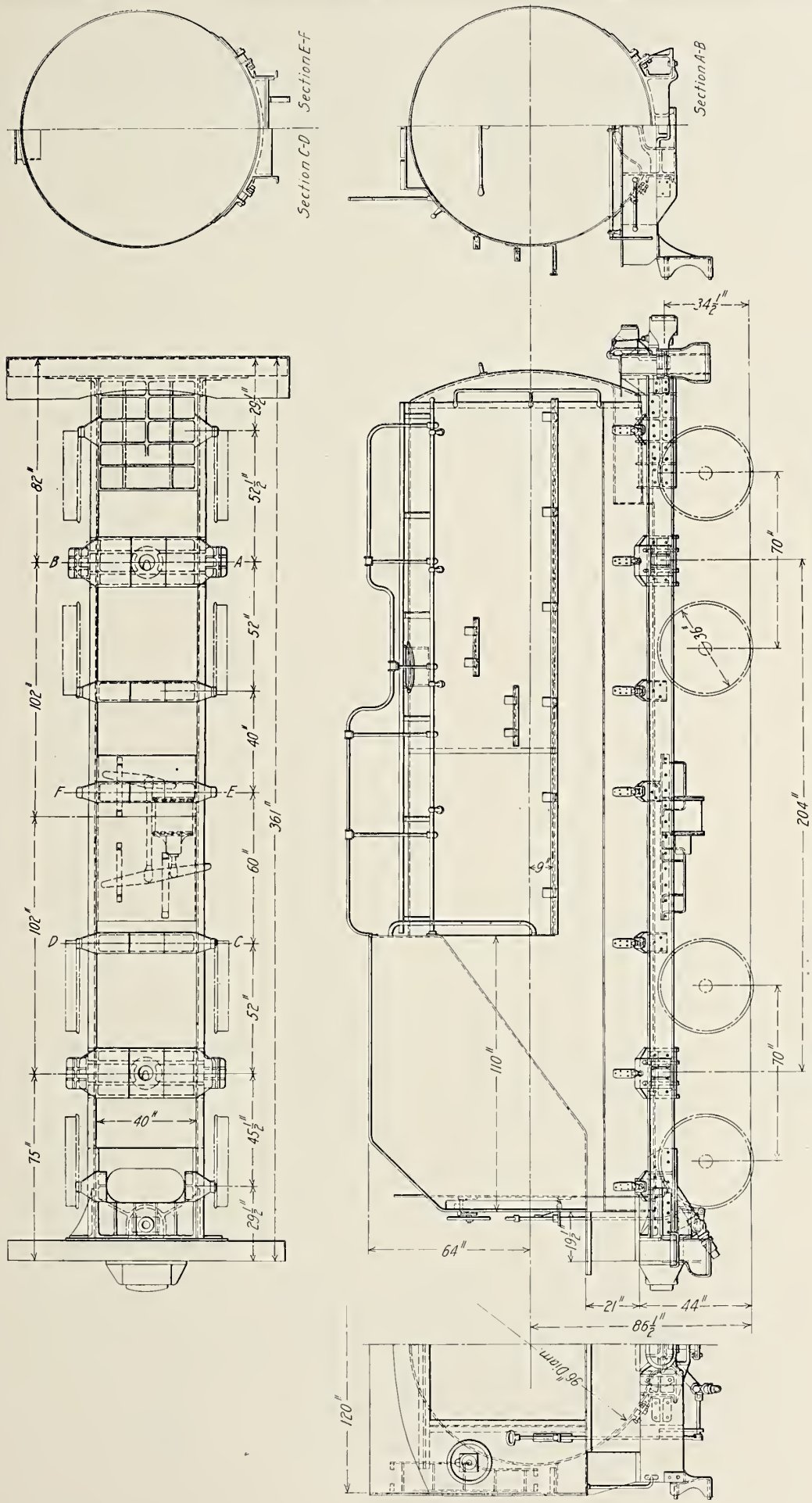

Fig. 1759—Tender with Vanderbilt Tank; Baldwin Locomotive Works.

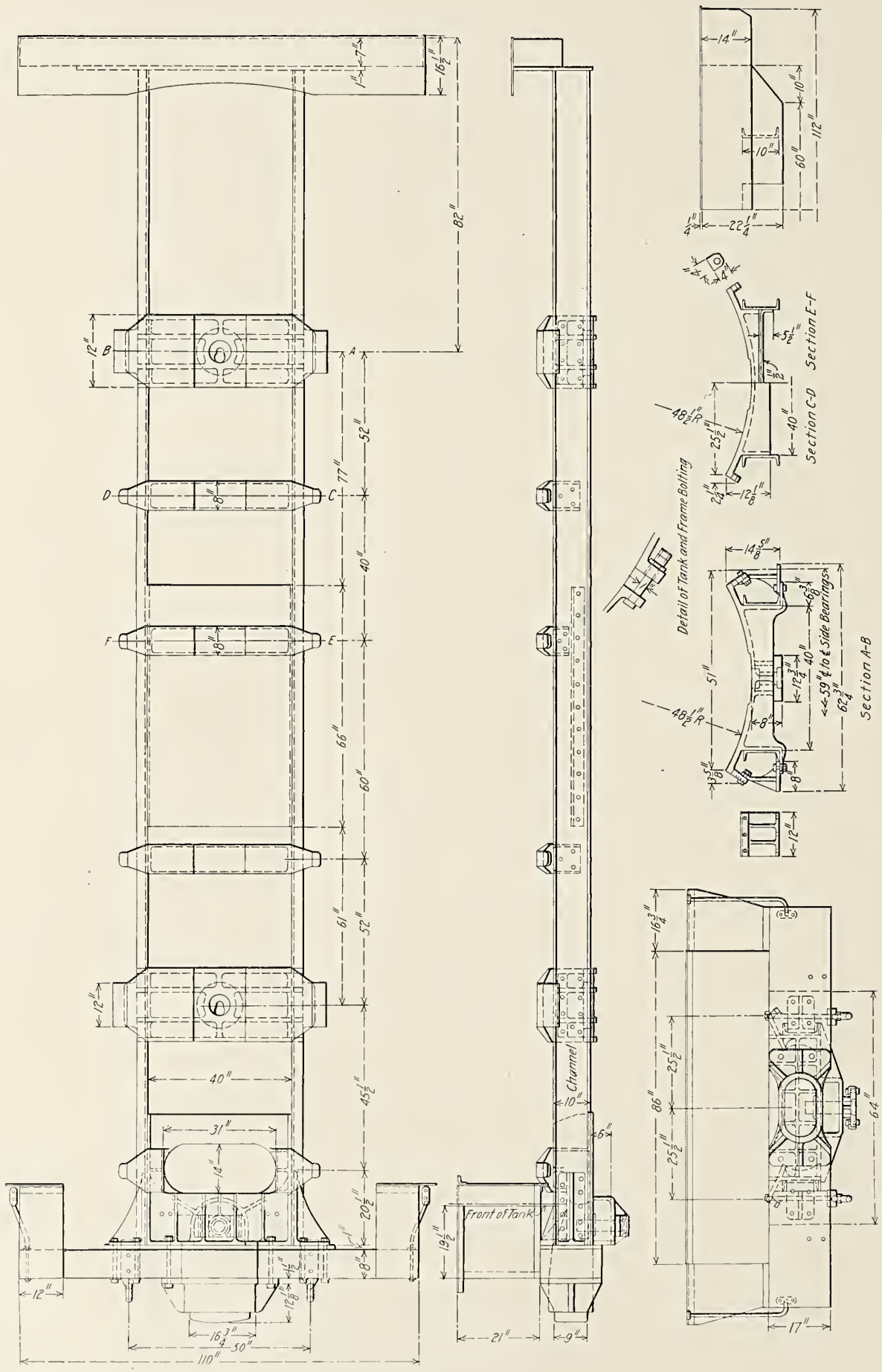

Fig. 1760—Underframe for Tender with Vanderbilt Tank; Baldwin Locomotive Works.

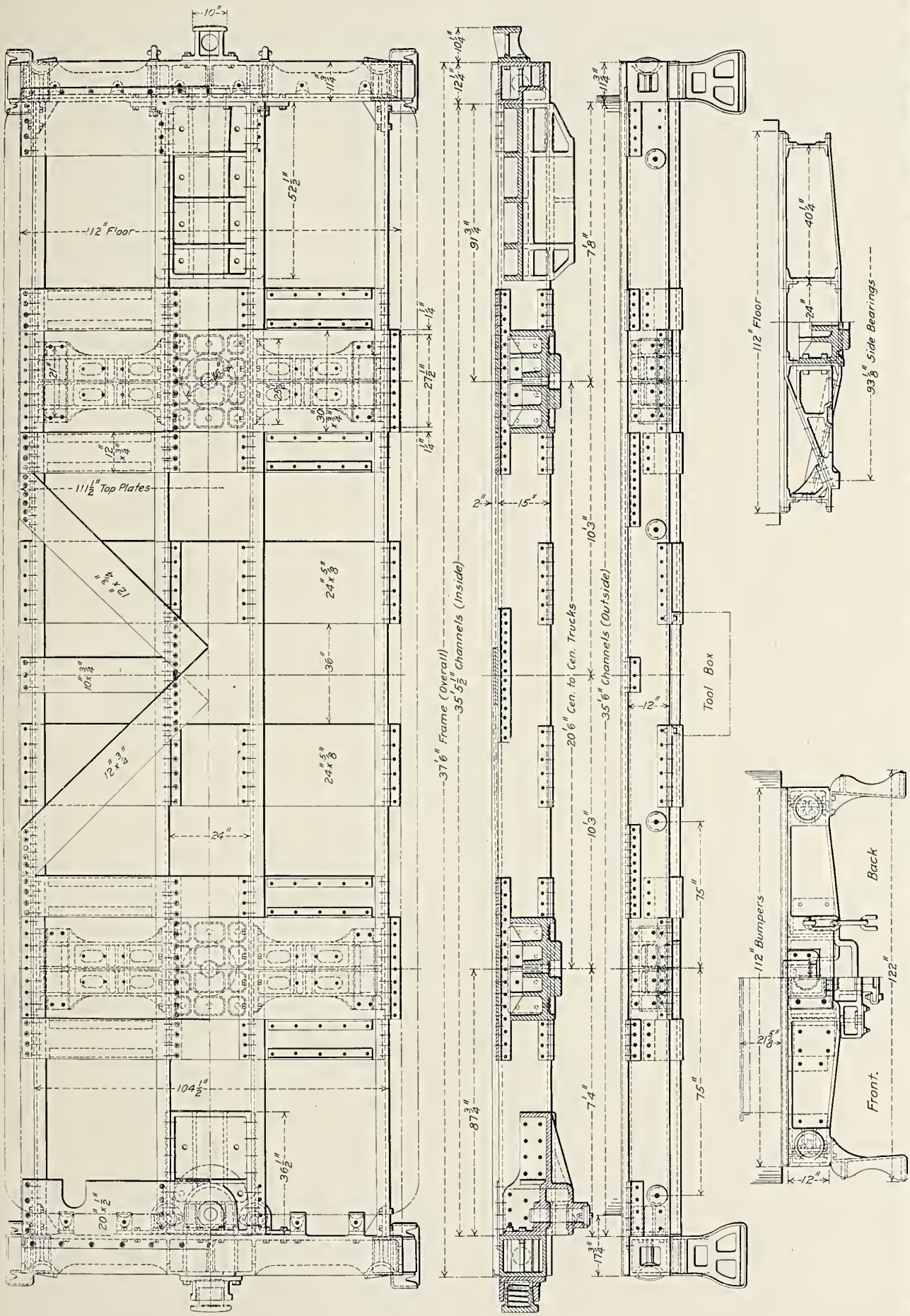

Fig. 1761—Underframe of 12,000 Gal. Tender for Mallet Articulated Compound Locomotive. Built for the Atchison, Topeka & Santa Fe by the Baldwin Locomotive Works.

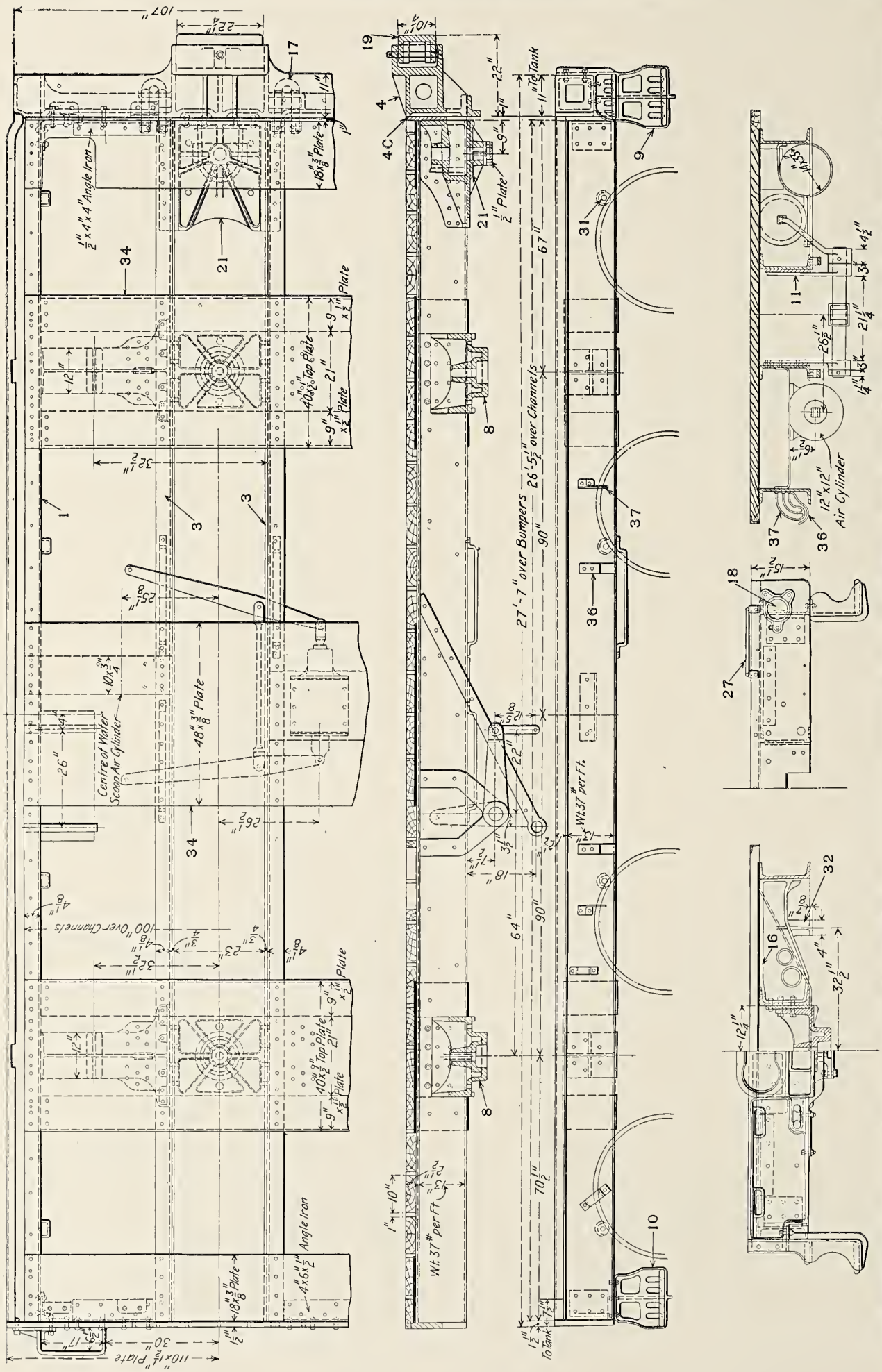

Fig. 1762—Underframe of 7,500 Gal. Tender for Pacific Type (4-6-2) Locomotive. Built for the New York Central & Hudson River by the American Locomotive Company.

Numbers Refer to Names of Parts on Page 664.

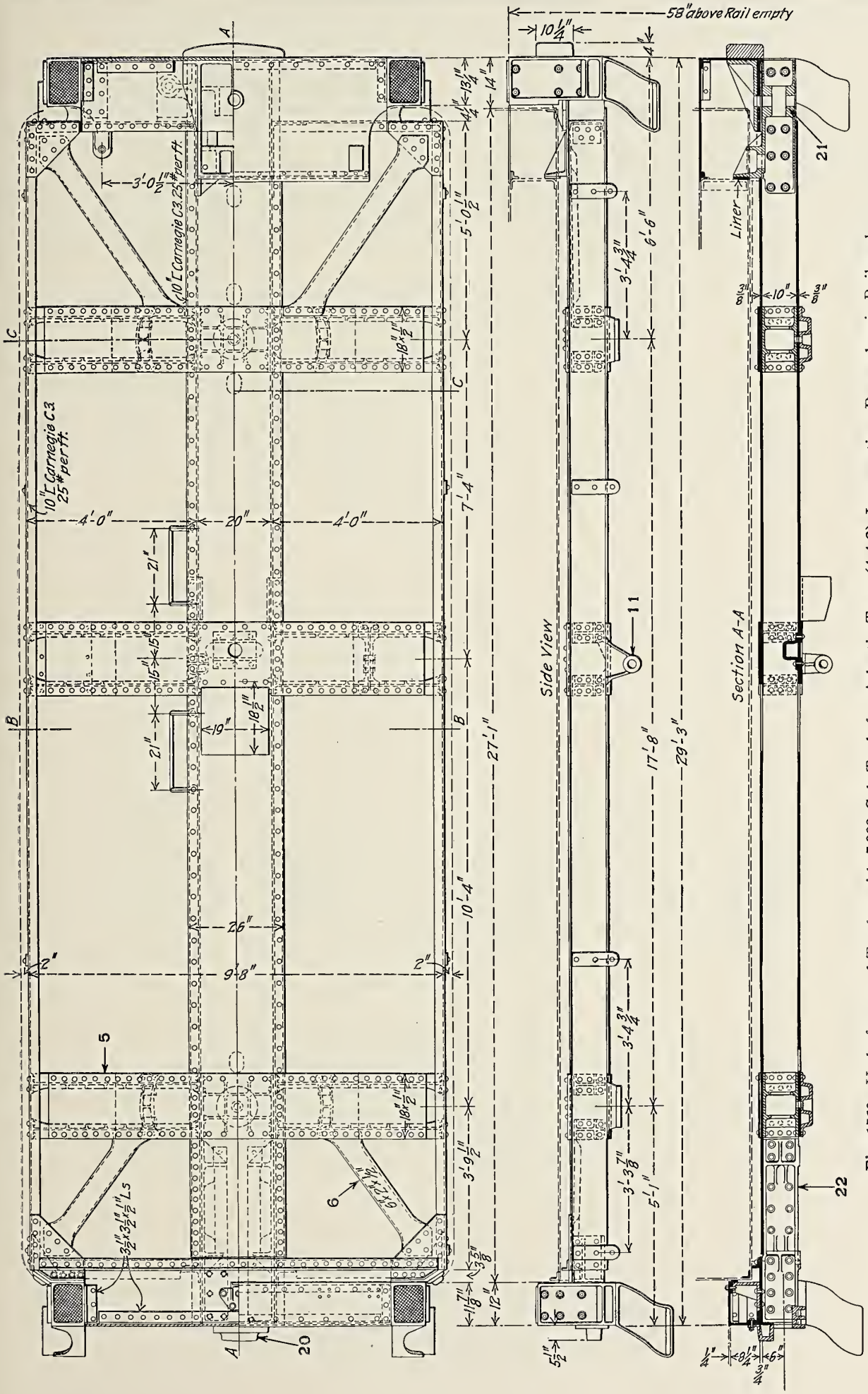

Fig. 1763—Underframe of Tender with 7,000 Gal. Tank for Atlantic Type (4-4-2) Locomotive; Pennsylvania Railroad.

(See Fig. 1764 for cross sections.)

Numbers Refer to Names of Parts on Page 664.

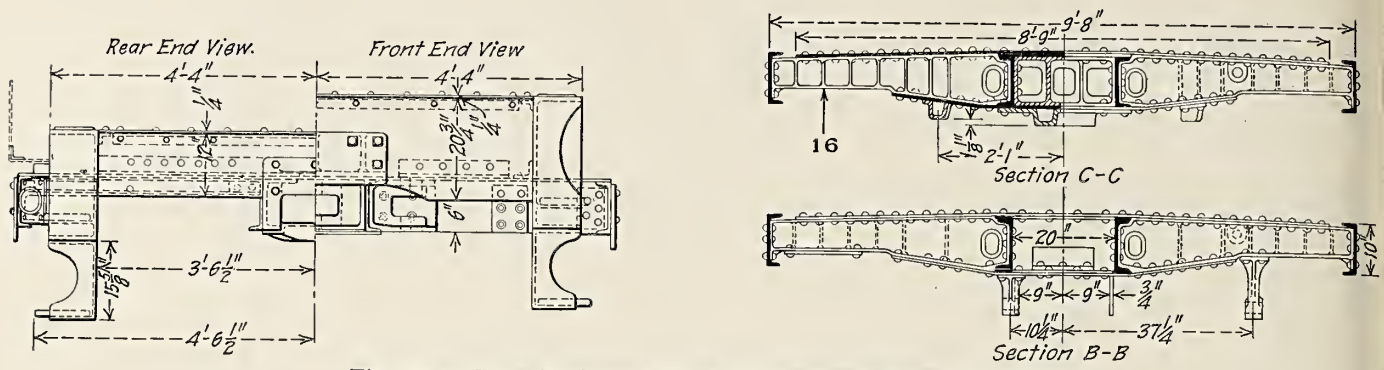

Fig. 1764—Cross Sections of Tender Underframe Shown in Fig. 1763.

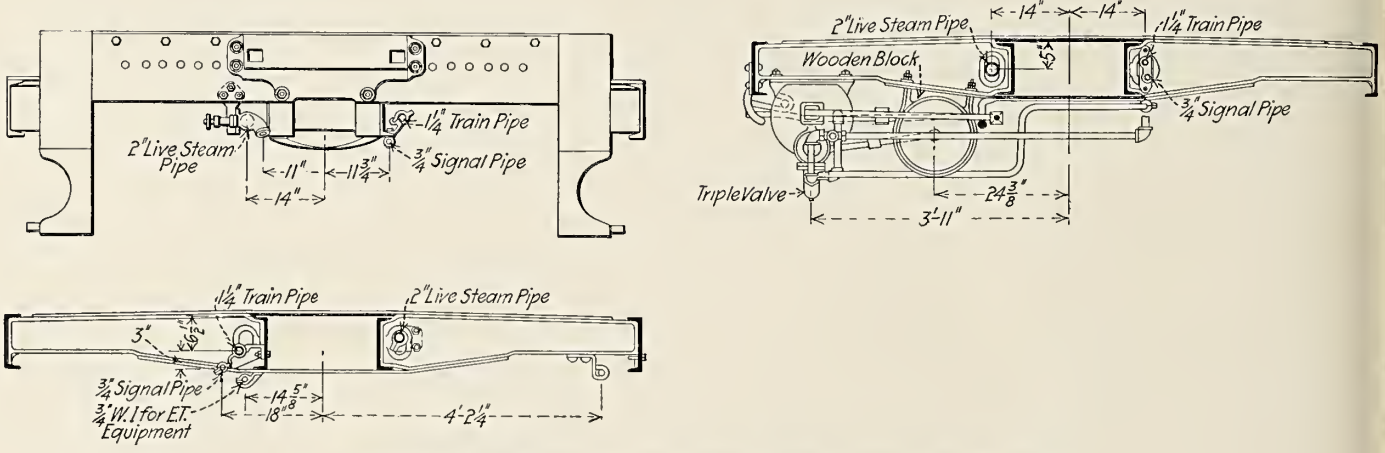

Fig. 1765—Cross Sections of Air Brake Piping Shown in Fig. 1767.

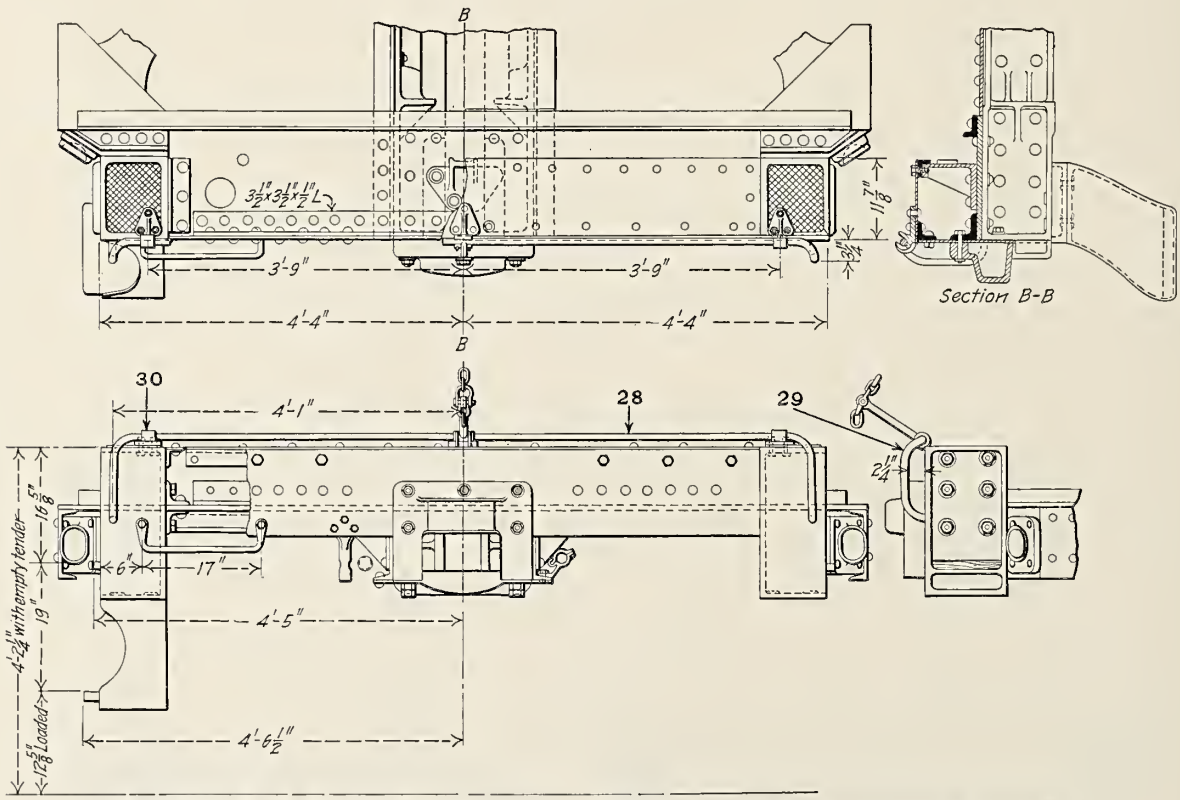

Fig. 1766—Rear End Sill Arrangement of 7,000 Gal. Tender; Pennsylvania Railroad.
Numbers Refer to Names of Parts on Page 664.

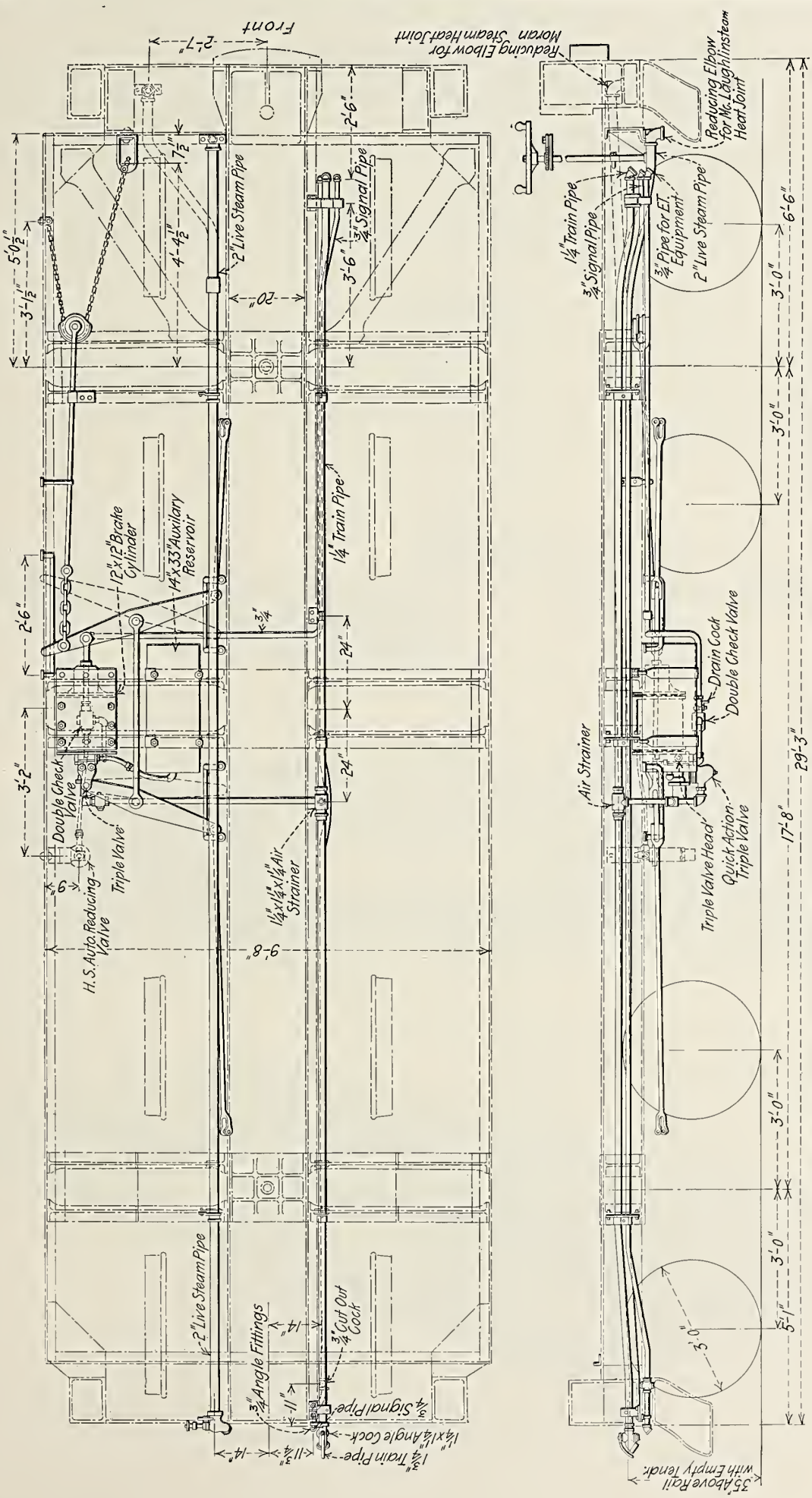

Fig. 1767—General Arrangement of Air Brake and Piping on 7,000 Gal. Tender; Pennsylvania Railroad.

(*See Fig. 1765 for cross sections.*)

Names of Parts of Tender Underframes, Figs. 1762-1766

1 *Side Sill*
3 *Center Sill*
4 *End Sill or Bumper*
4c *End Sill Facing Plate*
5 *Bolster*
6 *Diagonal Frame Brace*
8 *Center Plate*
9 *Front Step*
10 *Rear Step*
11 *Water Scoop Shaft Support*
16 *Bolster Diaphragm*
17 *Safety Chain Eye*
18 *Poling Pocket*
19 *Chafing Block*
20 *Striking Plate*
21 *Draft Casting*
22 *Draft Lug or Cheek Casting*
27 *Handhold*
28 *Uncoupling Shaft*
29 *Uncoupling Shaft Handle*
30 *Uncoupling Shaft Bearing*
31 *Check Chain Hook*
32 *Side Bearings*
34 *Frame Crosstie*
36 *Push Pole Hanger*
37 *Push Pole Stop*

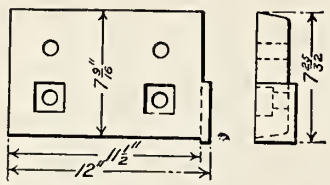

Fig. 1768 — Front End Sill Filling Piece.

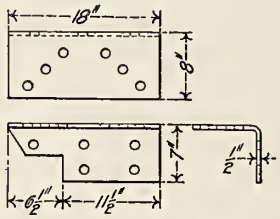

Fig. 1769 — Side Sill Gusset Plate.

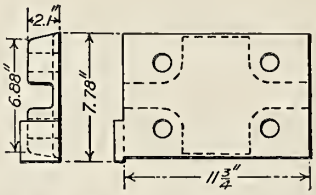

Fig. 1770 — Rear End Sill Filling Piece.

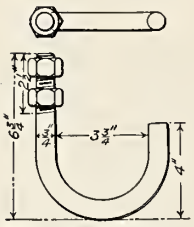

Fig. 1771—Injector Supply Pipe Hanger.

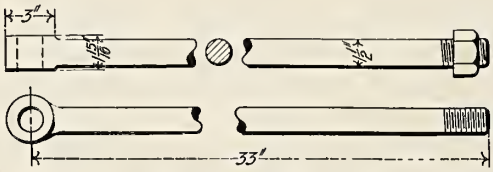

Fig. 1772—Stop Bolt.

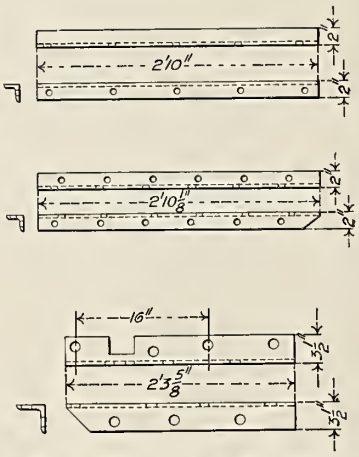

Fig. 1775 — Rear End Sill Angles.

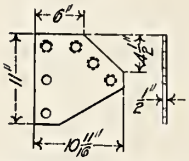

Fig. 1773 — Side Sill Gusset Plate.

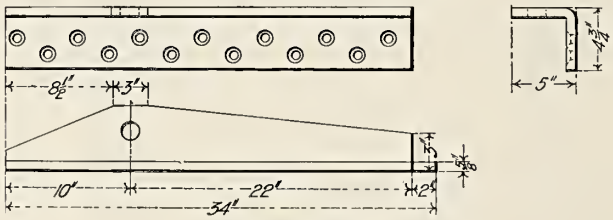

Fig. 1774—Stop Angle.

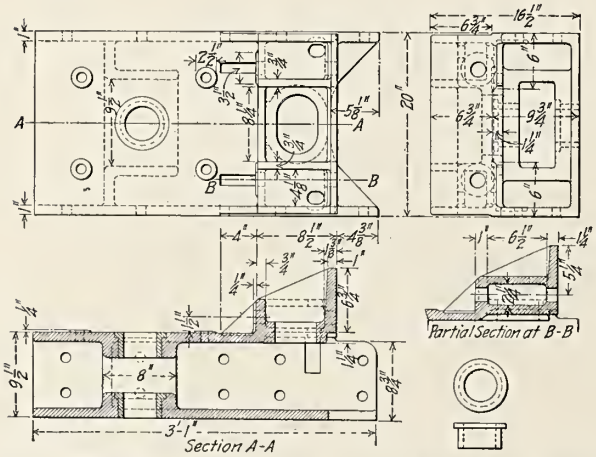

Fig. 1776—Combined Center Draft Casting and Stop Block.

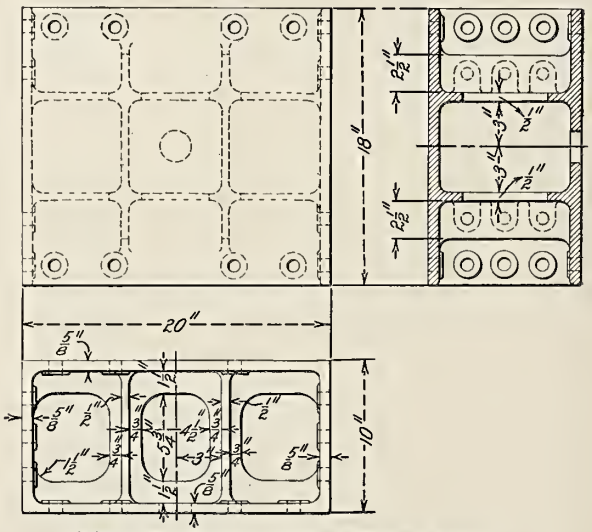

Fig. 1777—Body Bolster Filling Piece.

Figs. 1768-1777 are Details of Tender Underframe for Atlantic Type (4-4-2) Locomotive; Pennsylvania Railroad.

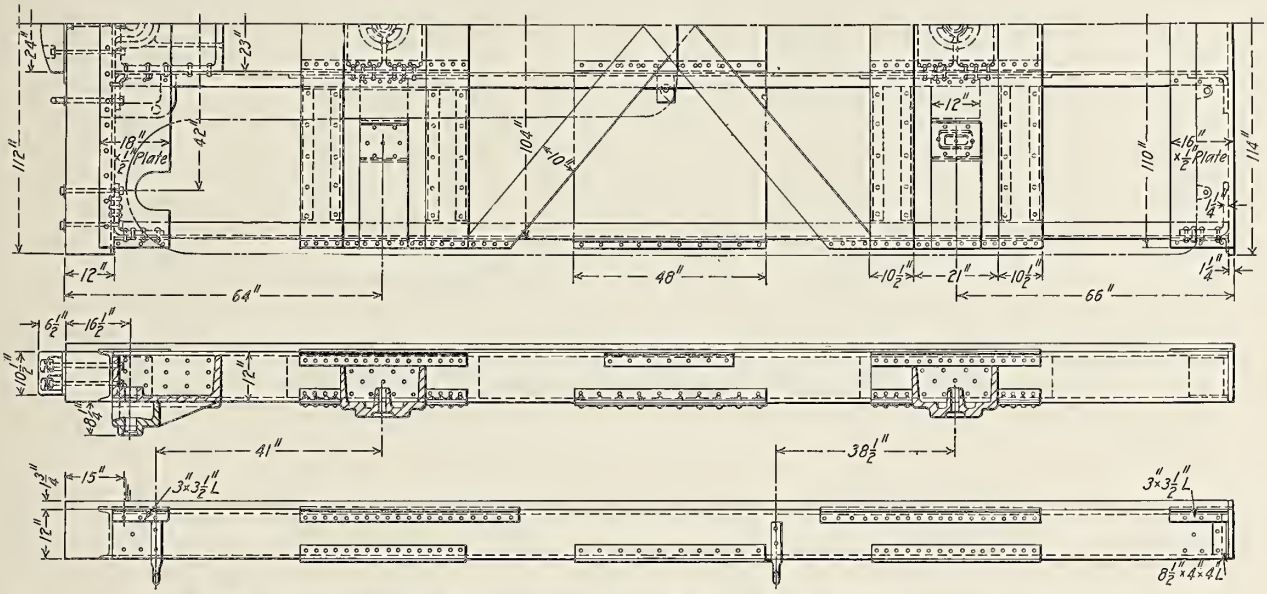

Fig. 1778—Underframe for Tender with 6,000 Gal. Tank; Baldwin Locomotive Works.

Fig. 1779—Cast Steel Rear End Sill for Passenger Tender; Commonwealth Steel Company.

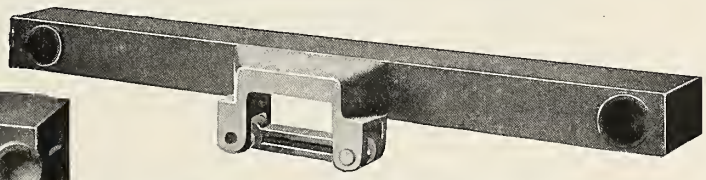

Fig. 1780—Cast Steel Rear End Sill with Flory Carry Iron and Striking Plate Cast Integral; Commonwealth Steel Company.

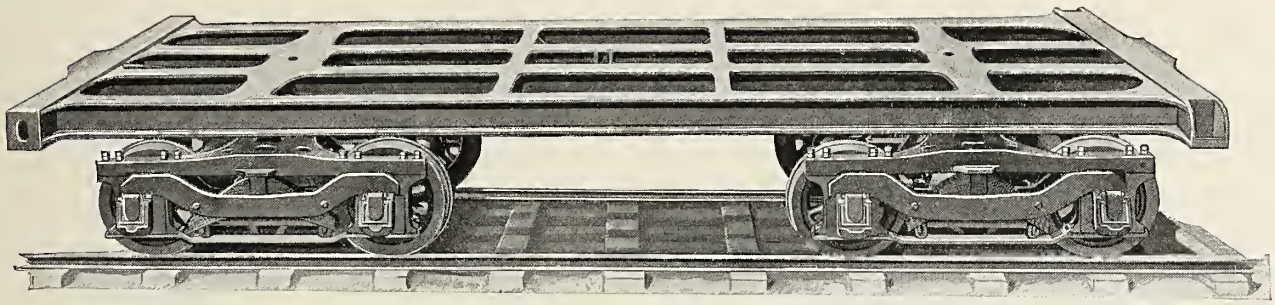

Fig. 1781—Commonwealth Cast Steel One-Piece Tender Underframe, Top View; Commonwealth Steel Company.

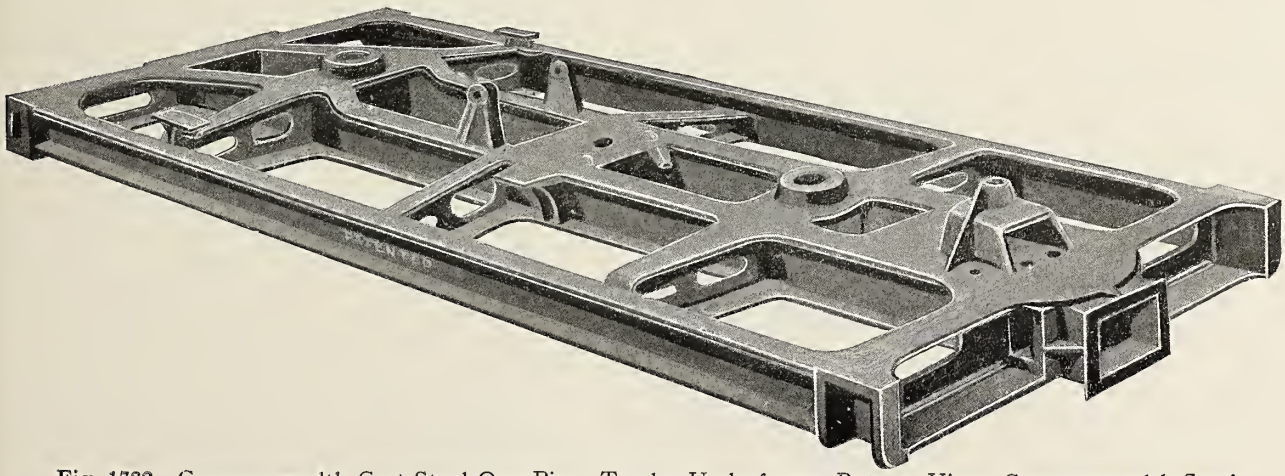

Fig. 1782—Commonwealth Cast Steel One-Piece Tender Underframe, Bottom View; Commonwealth Steel Company.

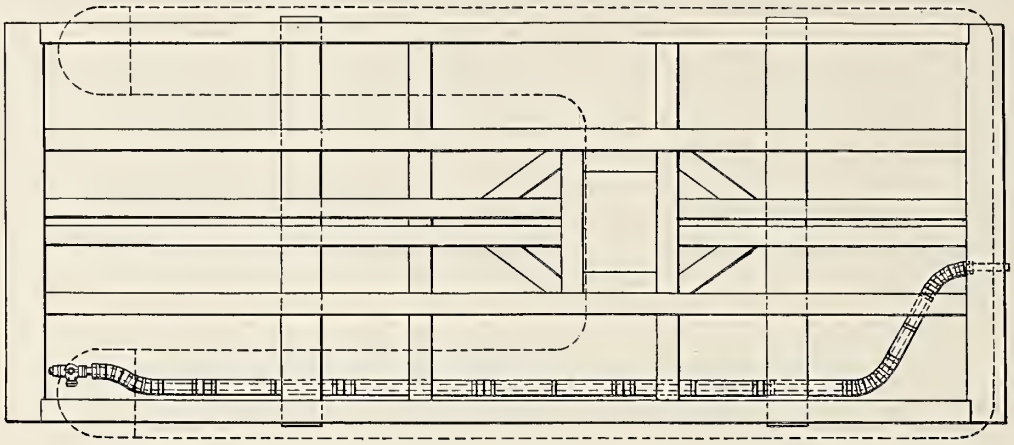

Fig. 1783—Arrangement of Steam Pipe Covering Under Tender.

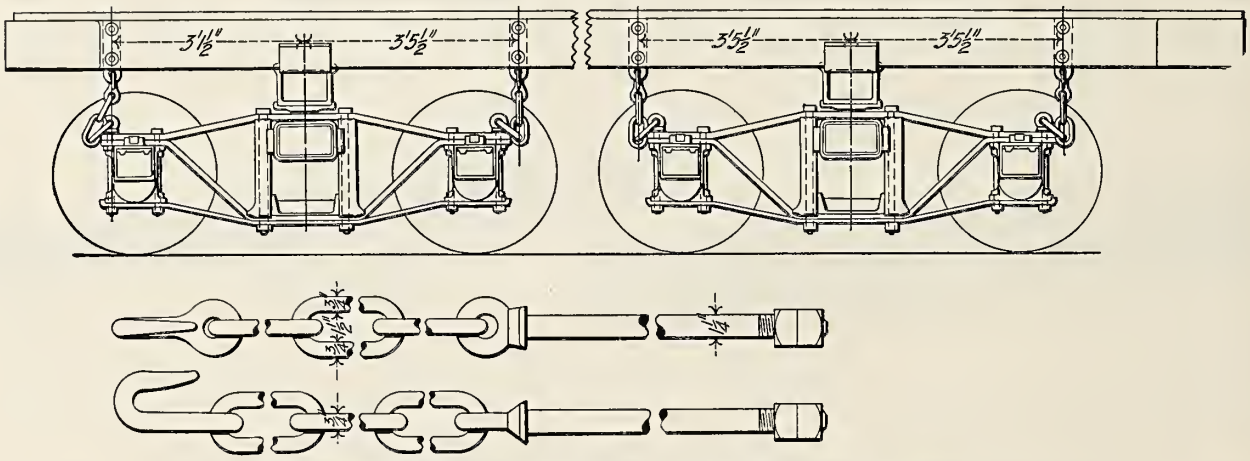

Fig. 1784—Arrangment of Truck Safety Chains on Tender.

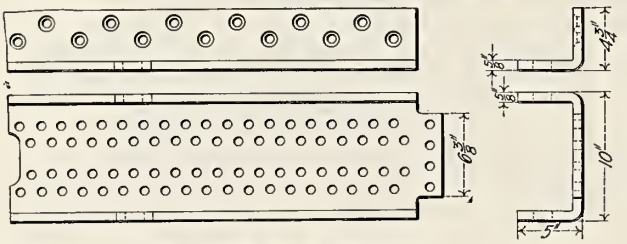

Fig. 1785—Stop Channel.

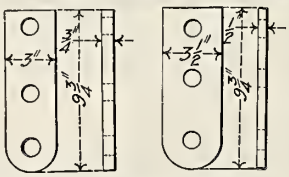

Fig. 1786—Safety Chain Eyes.

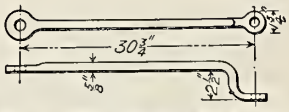

Fig. 1787—Rear End Sill Grab Iron.

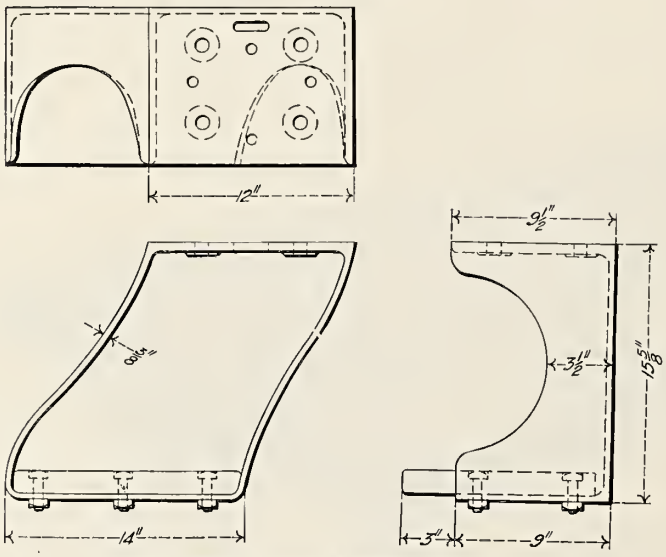

Fig. 1788—Lower Tender Step.

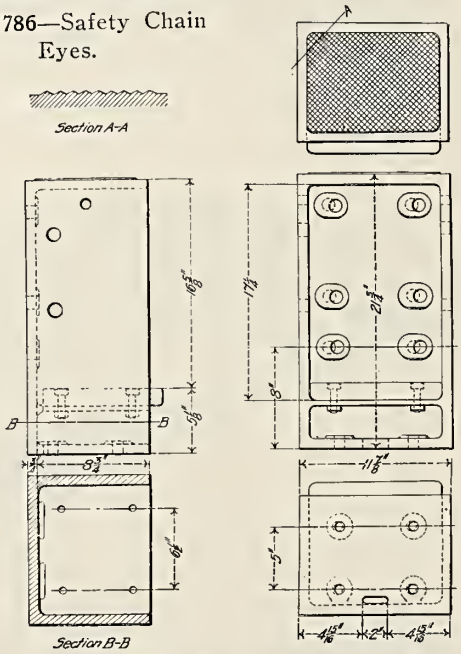

Fig. 1789—Rear Upper Tender Step.

Figs. 1783-1789 are Details of Tender for Atlantic Type (4-4-2) Locomotive; Pennsylvania Railroad.

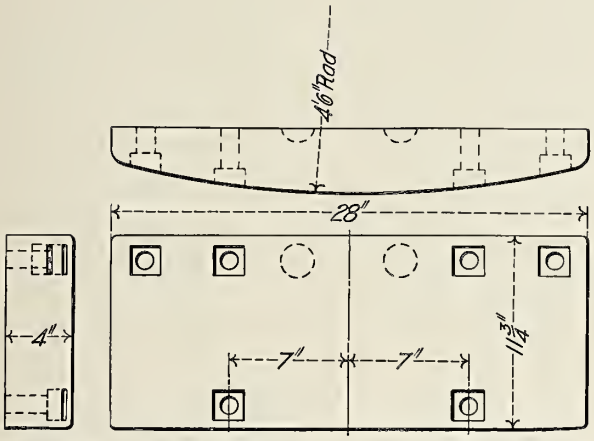

Fig. 1790—Chafing Block on Tender; Pennsylvania Railroad.

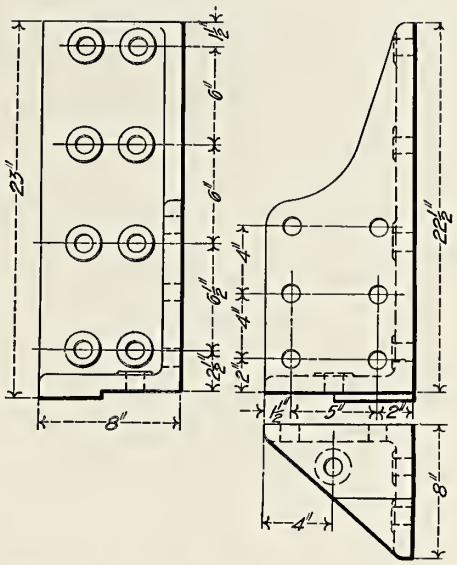

Fig. 1791—Back Stop Casting for Chafing Block; Pennsylvania Railroad.

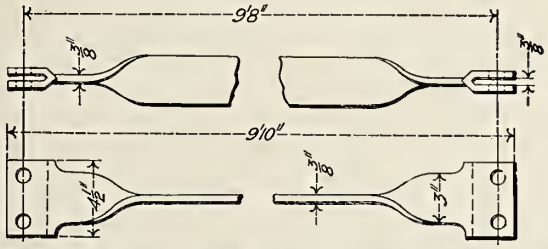

Fig. 1792—Tank Cross Brace; Pennsylvania Railroad.

Names of Parts of Fig. 1794.

1 *Latch*
2 *Latch Handle*
3 *Latch Handle Guide*
4 *Latch Stem*

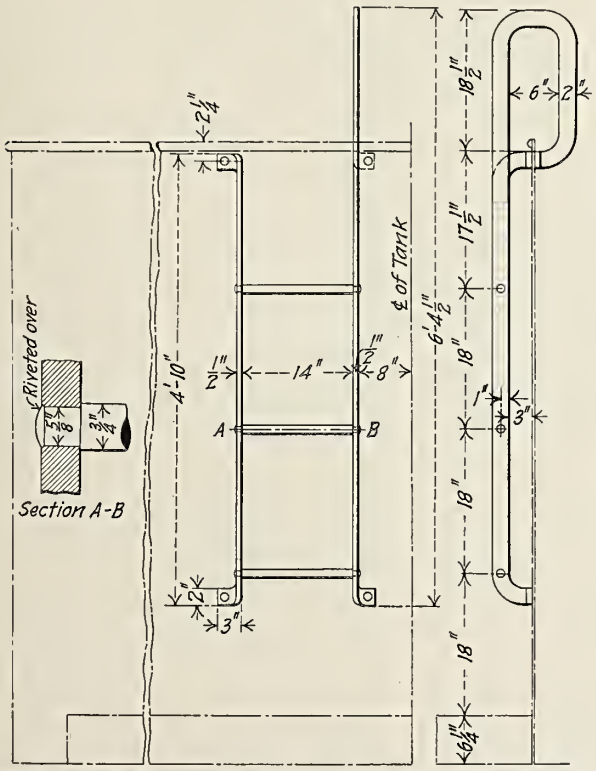

Fig. 1793—Arrangement of Rear End Ladder on Tender Tank for Atlantic Type (4-4-2) Locomotive; Pennsylvania Railroad.

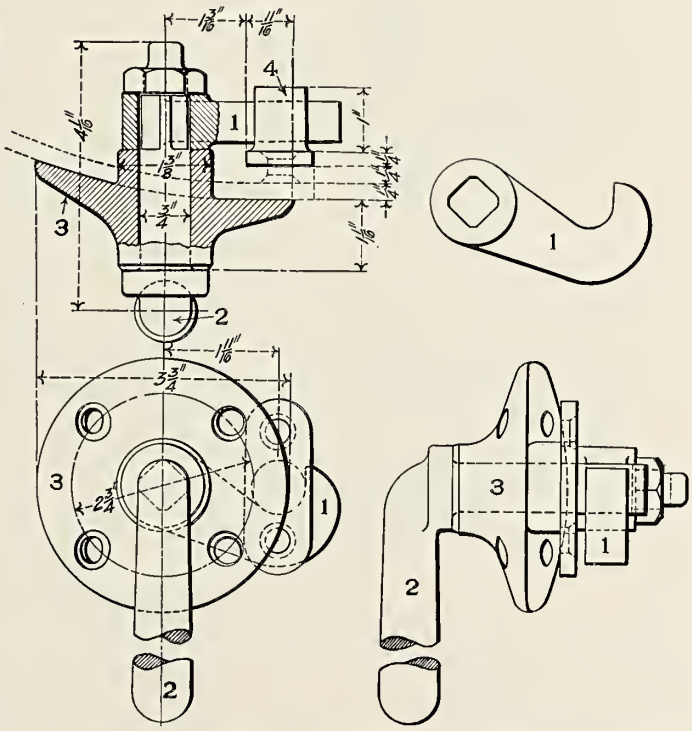

Fig. 1794—Latch for Curved Tank Closet Doors; Pennsylvania Railroad.

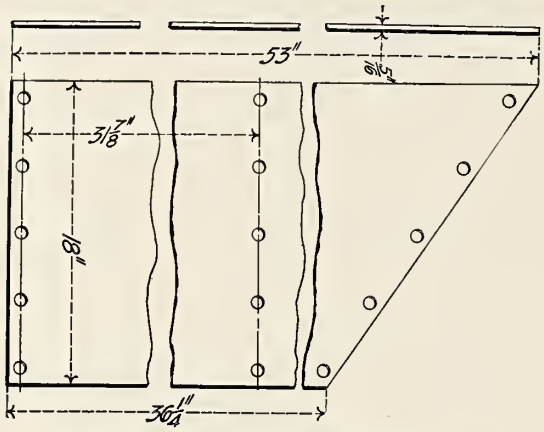

Fig. 1795—Upright Brace Plate.

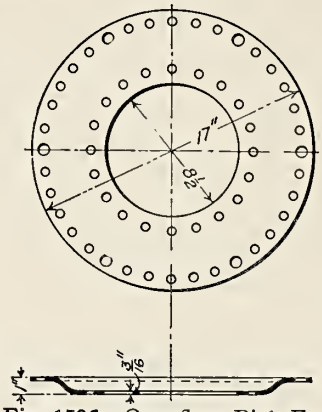

Fig. 1796—Overflow Pipe Expansion Ring.

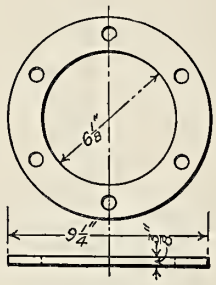

Fig. 1797—Reinforcing Plate for Wash-out Well.

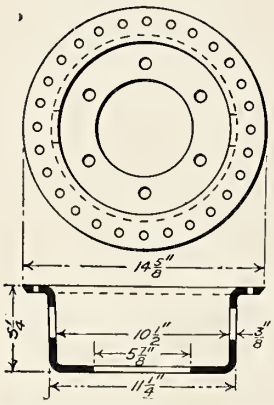

Fig. 1798—Wash-out Well.

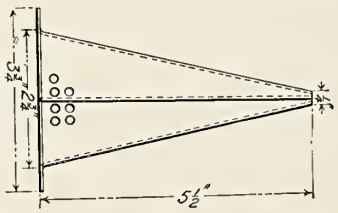

Fig. 1799—Tank Hose Strainer.

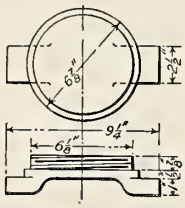

Fig. 1800—Wash-out Well Plug.

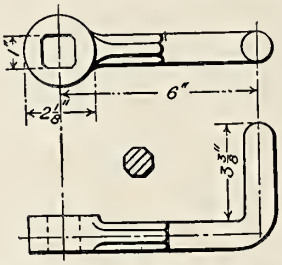

Fig. 1801—Tank Valve Handle.

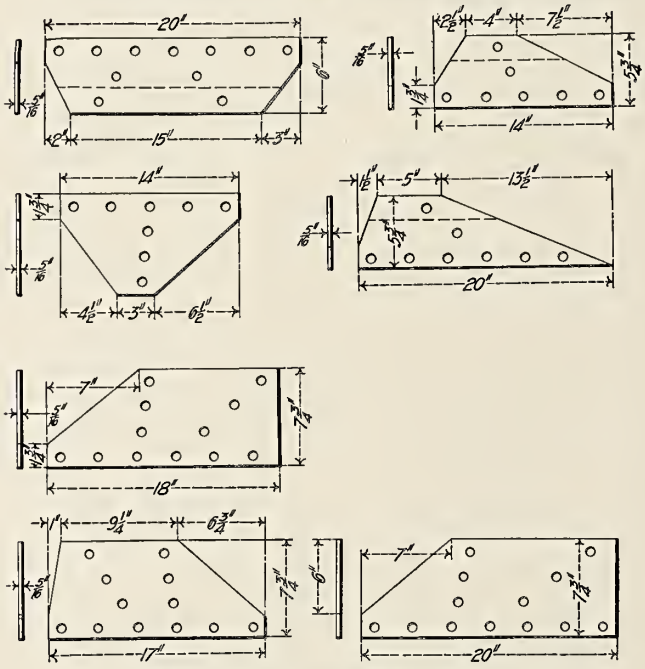

Fig. 1802—Vertical Brace Plates.

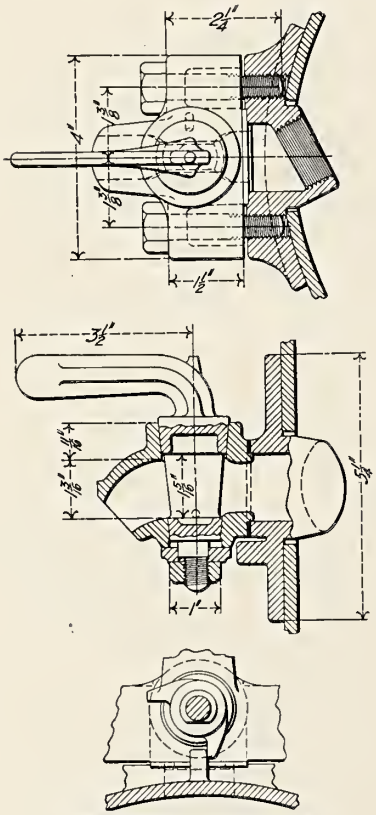

Fig. 1803—Tank Cock.

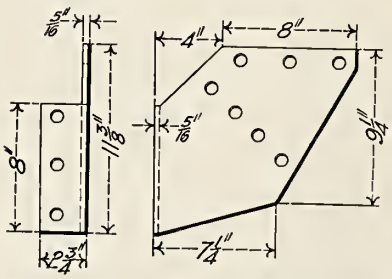

Fig. 1804—Tank Cover Brace Plate.

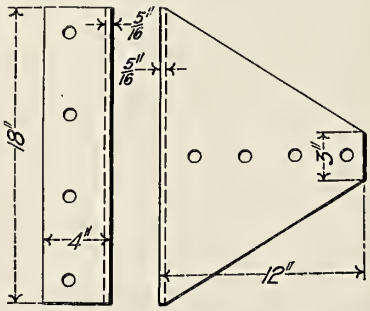

Fig. 1805—Back Brace Plate.

Figs. 1795-1805 are Details of Tender Tank for Atlantic Type (4-4-2) Locomotive; Pennsylvania Railroad.

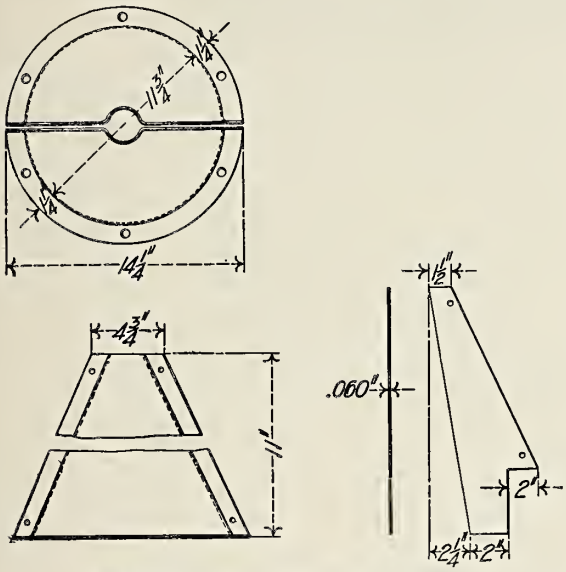

Fig. 1806—Tank Valve Strainer.

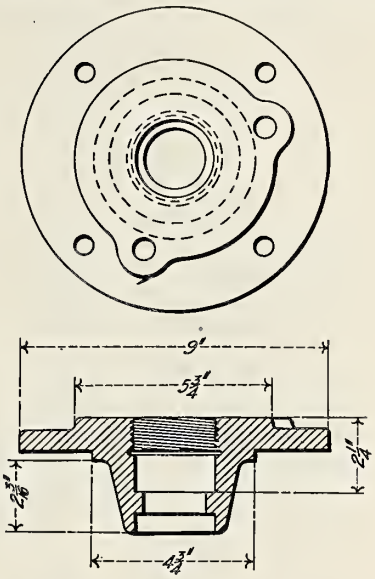

Fig. 1807—Plate for Tank Valve.

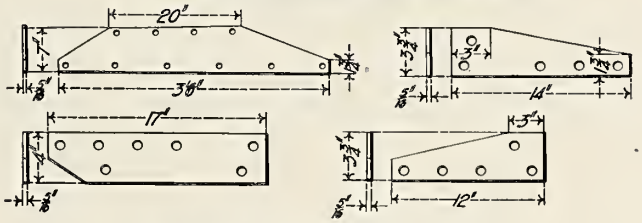

Fig. 1808—Vertical Brace Plates.

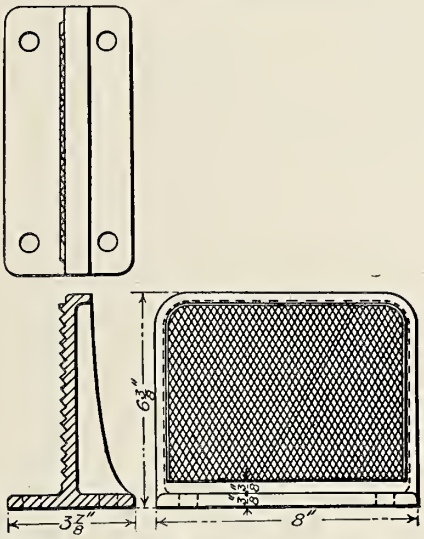

Fig. 1809—Step for Rear End of Coal Space.

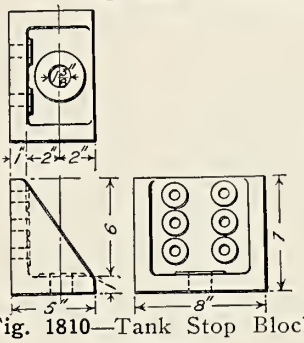

Fig. 1810—Tank Stop Block Bracket.

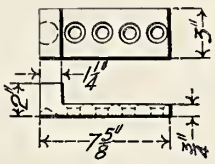

Fig. 1811—Tank Stop Block.

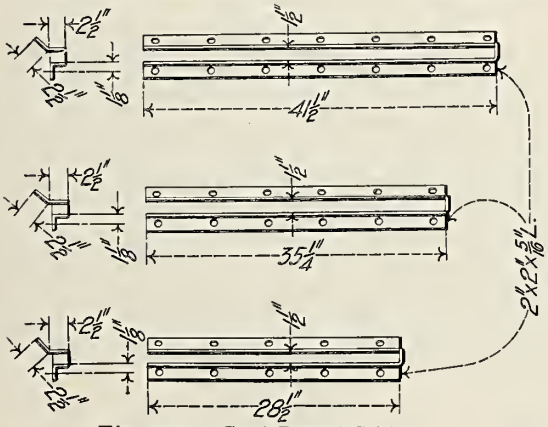

Fig. 1812—Coal Board Slides.

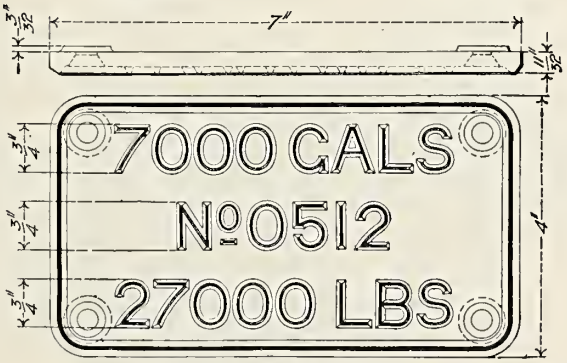

Fig. 1813—Badge Plate.

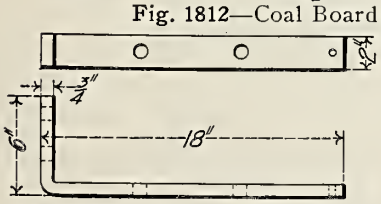

Fig. 1814—Coal Board Brace.

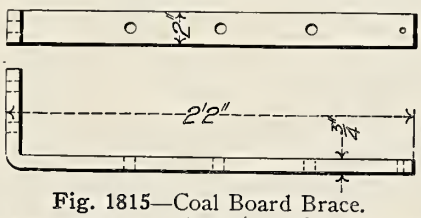

Fig. 1815—Coal Board Brace.

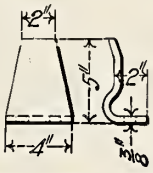

Fig. 1816—Poker Bracket.

Figs. 1806-1816 are Details of Tender Tank for Atlan tic Type (4-4-2) Locomotive; Pennsylvania Railroad.

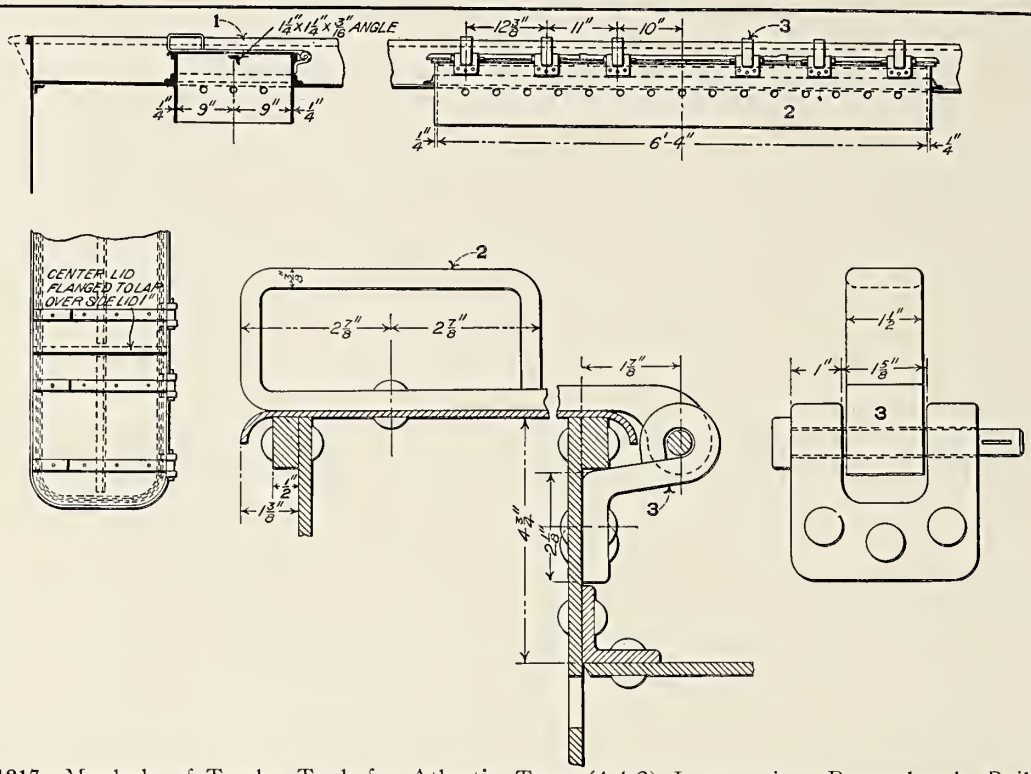

Fig. 1817—Manhole of Tender Tank for Atlantic Type (4-4-2) Locomotive; Pennsylvania Railroad.
Numbers Refer to Names of Parts on Page 654.

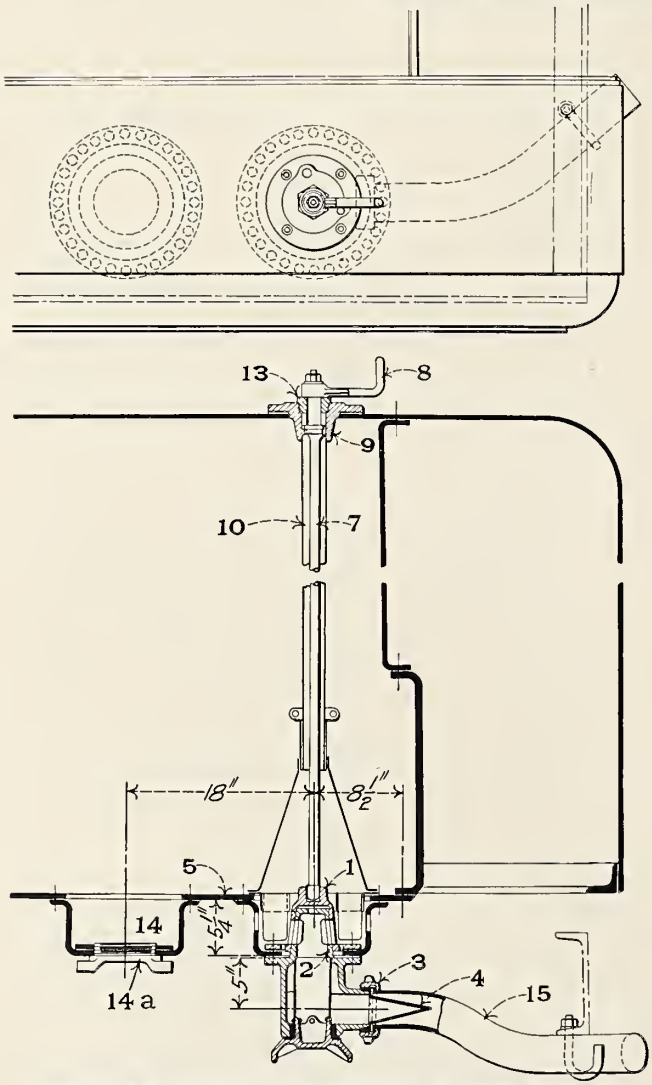

Fig. 1818—General Arrangement of Tank Valve; Pennsylvania Railroad.

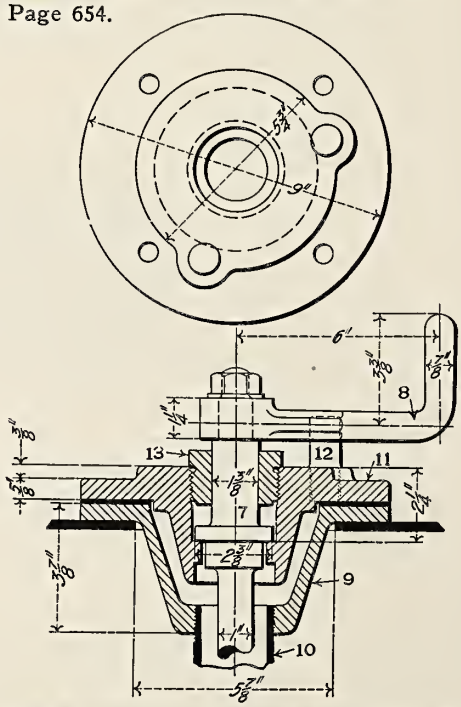

Fig. 1819—Stuffing Box for Tank Valve; Pennsylvania Railroad.

Names of Parts of Figs. 1818-1820.

1 *Valve*
2 *Valve Seat and Body*
3 *Suction Pipe Coupling*
4 *Strainer*
5 *Tank Floor Sheet*
6 *Tank Valve Hole Ring*
7 *Tank Valve Shaft*
8 *Tank Valve Handle*
9 *Tank Valve Stuffing Box*
10 *Tank Valve Shaft Casing*
11 *Tank Valve Plate*
12 *Tank Valve Handle Stop*
13 *Tank Valve Shaft Gland*
14 *Tank Well*
14a *Tank Well Cap*
15 *Suction Pipe*

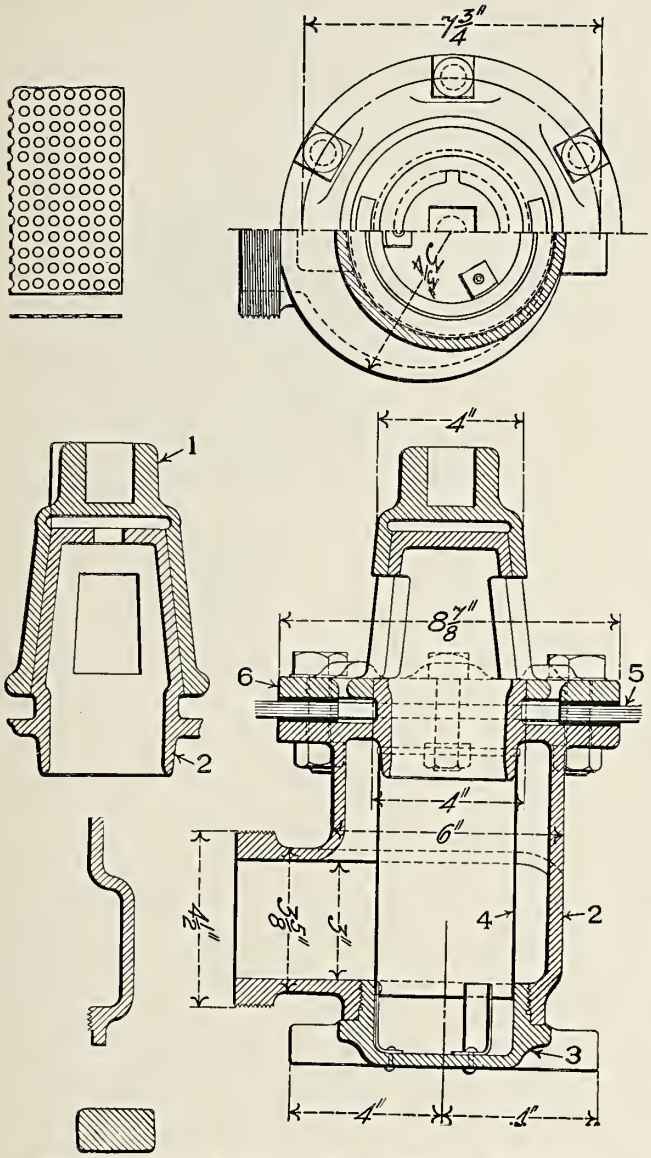

Fig. 1820—Tank Valve; Pennsylvania Railroad.

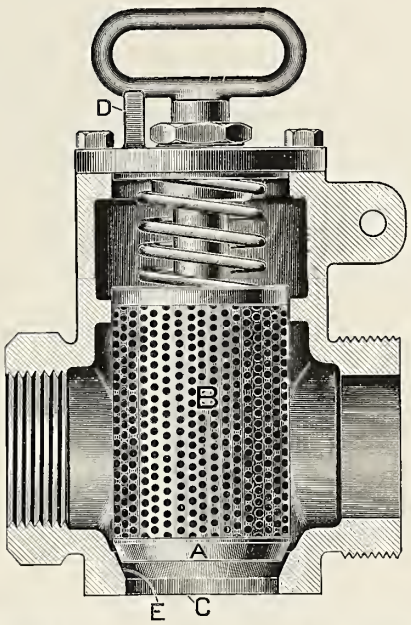

Fig. 1821—Watters Strainer and Drain Valve; Railway Supply & Equipment Company.

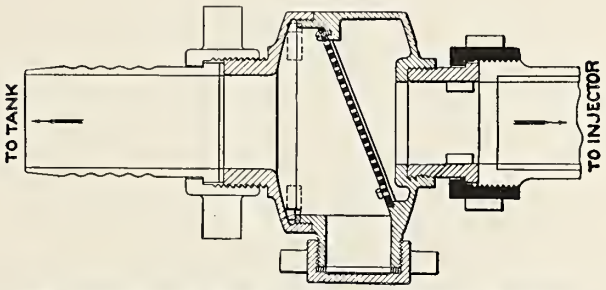

Fig. 1822—Tank Hose Strainer; Nathan Manufacturing Company.

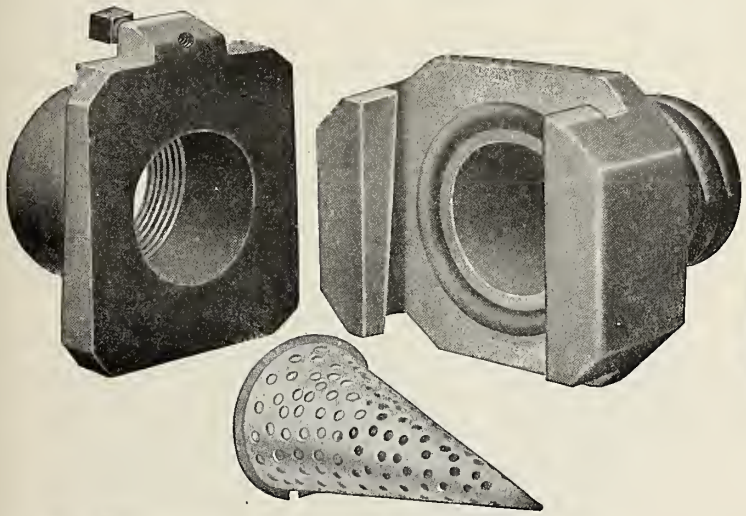

Fig. 1823—American Gravity Tank Hose Coupling. D. R. Niederlander.

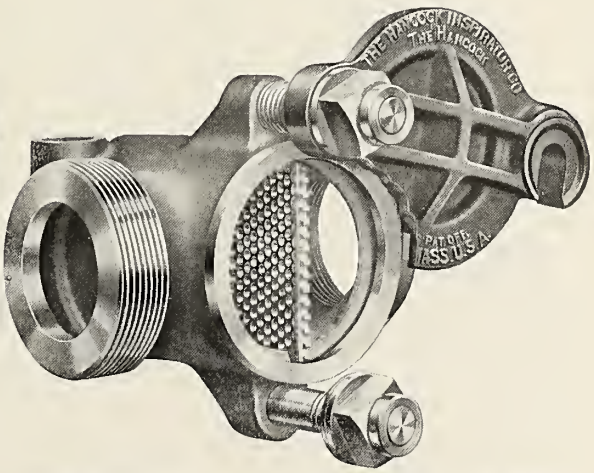

Fig. 1824—Hancock Hose Strainer with Swing Cover; Hancock Inspirator Company.

Number Refer to Names of Parts on Page 670.

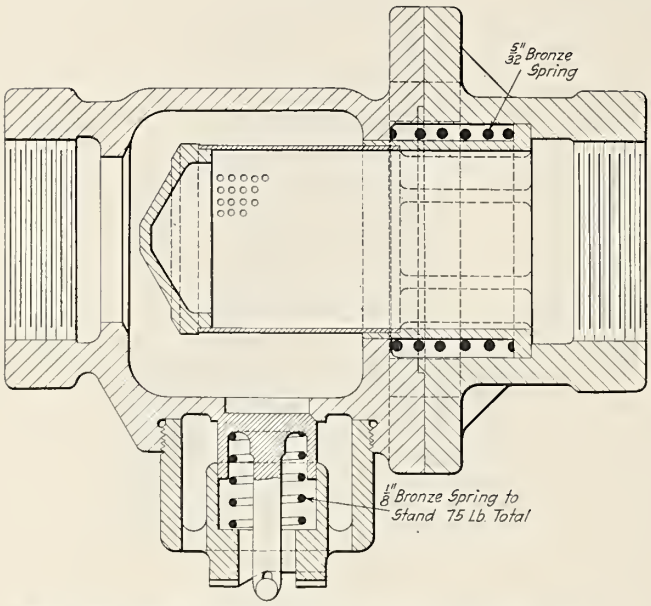

Fig. 1825—Tank Hose Strainer with Automatic Cleaning Device; Barco Brass & Joint Company.

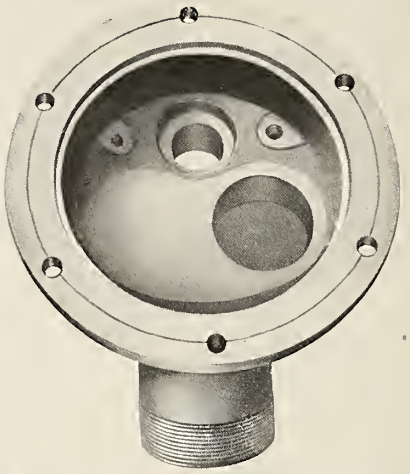

Fig. 1826—Everlasting Tank Valve; Patterson-Allen Engineering Company.

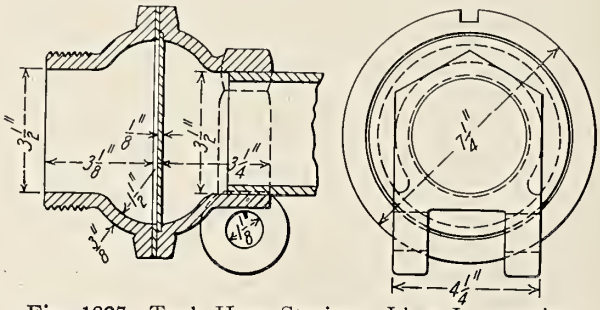

Fig. 1827—Tank Hose Strainer; Lima Locomotive Corporation.

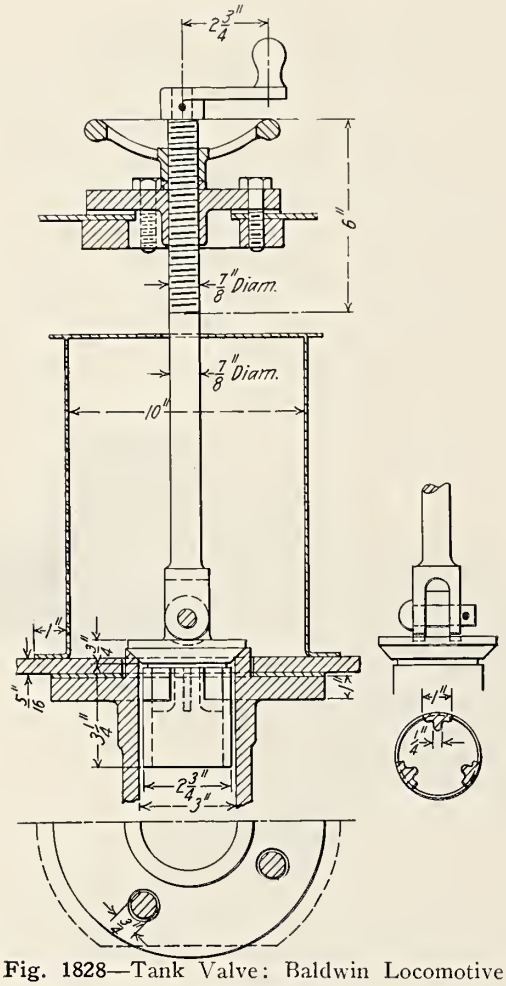

Fig. 1828—Tank Valve; Baldwin Locomotive Works.

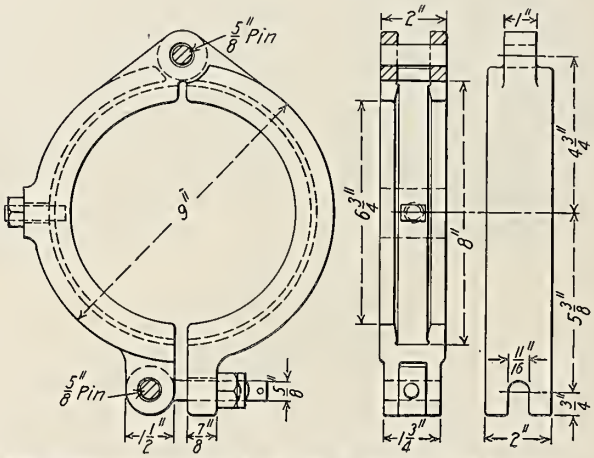

Fig. 1829—Clamp for Tank Hose Strainer; Lima Locomotive Corporation.

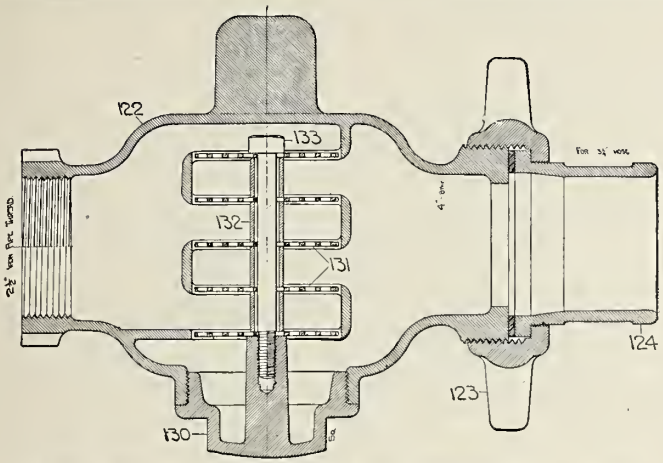

Fig. 1830—Ohio Hose Strainer, Standard J; Ohio Injector Company.

Names of Parts of Fig. 1830.

122 *Body*
123 *Hose Connection Nut*
124 *Hose Connection Nipple*
130 *Cap*
131 *Strainer Plate*
132 *Plate Washer*
133 *Plate Bolt*

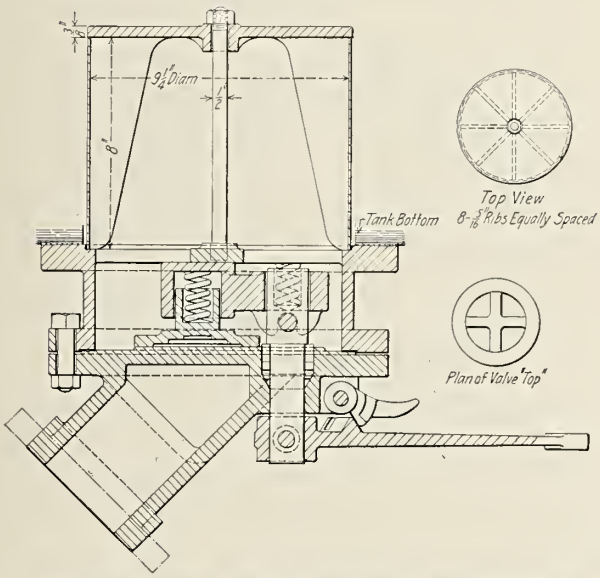

Fig. 1831—Tank Valve; Delaware, Lackawanna & Western.

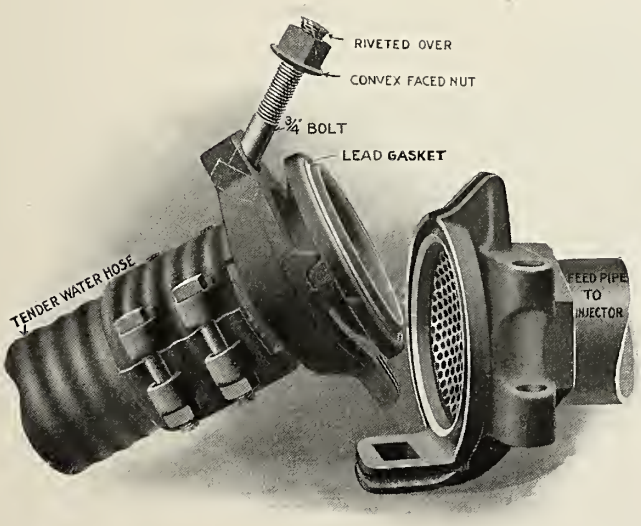

Fig. 1832—Okadee Tank Hose Coupler and Strainer; The Okadee Company.

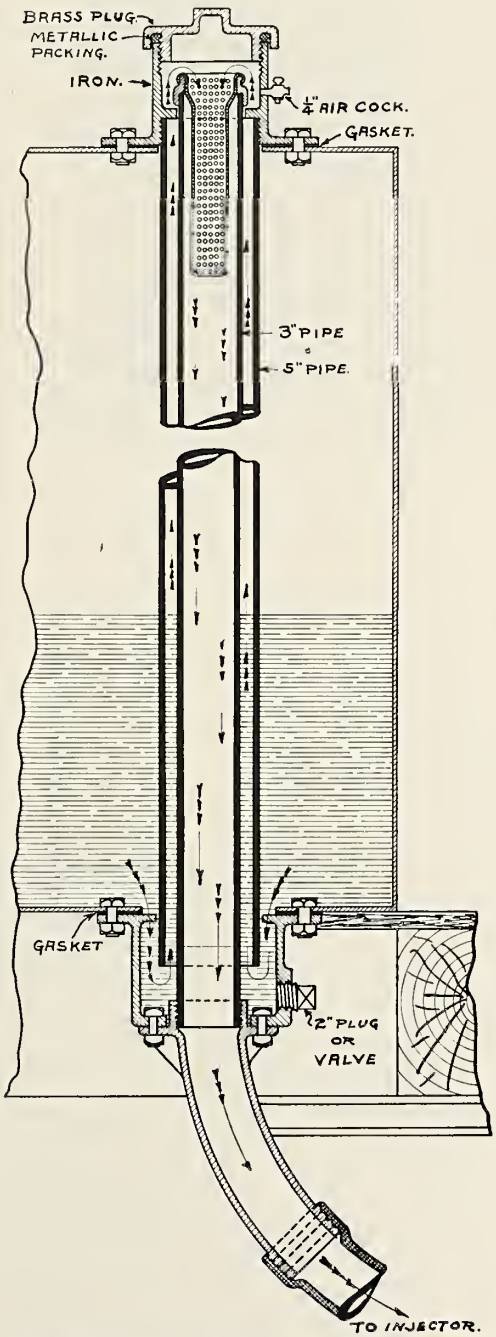

Fig. 1833—Linstrom Improved Syphon; Western Railway Equipment Company.

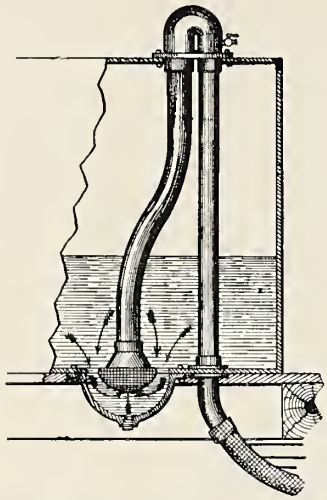

Fig. 1834—Application of the Linstrom Syphon; Western Railway Equipment Company.

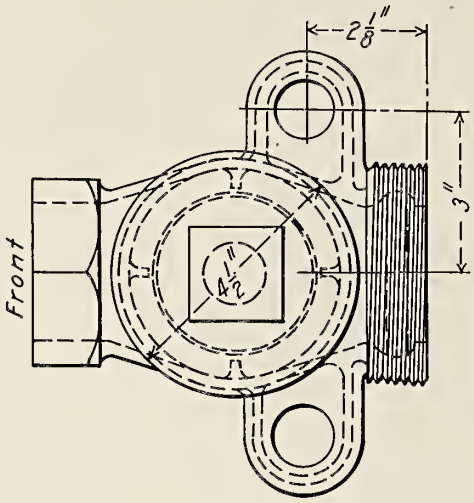

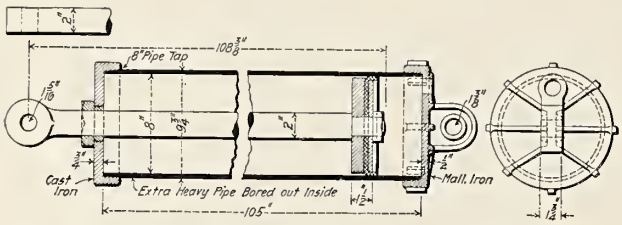

Fig. 1835—Coal Pusher Cylinder for Coal Pusher Shown in Fig. 1837.

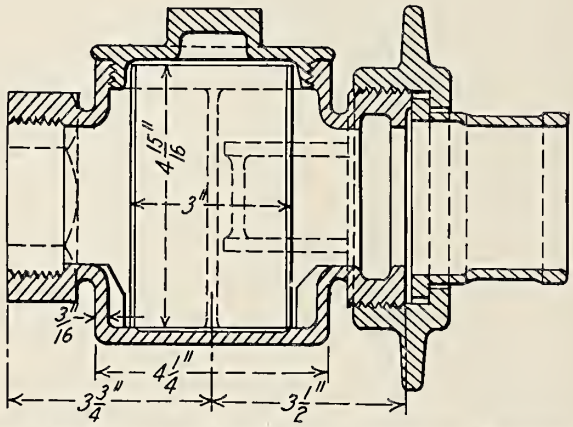

Fig. 1836—Injector Feed Pipe Coupling; Baldwin Locomotive Works.

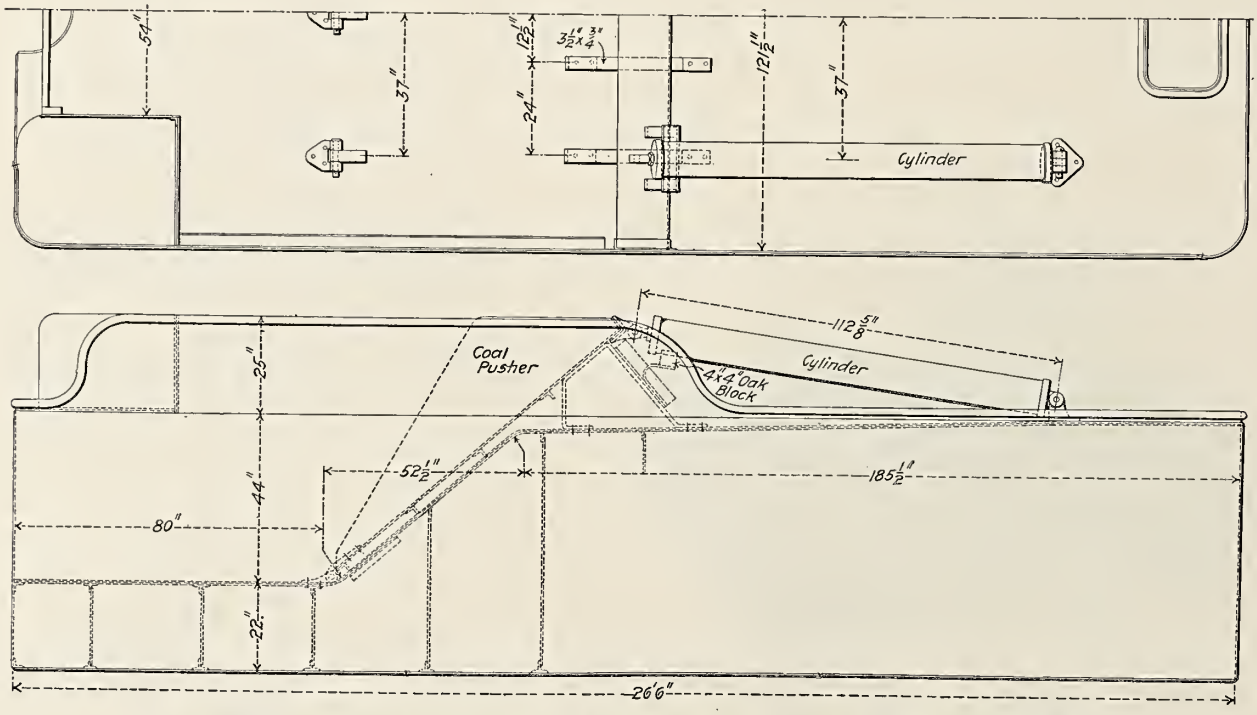

Fig. 1837—Pneumatic Coal Pusher for Large Tenders; Atchison, Topeka & Santa Fe.

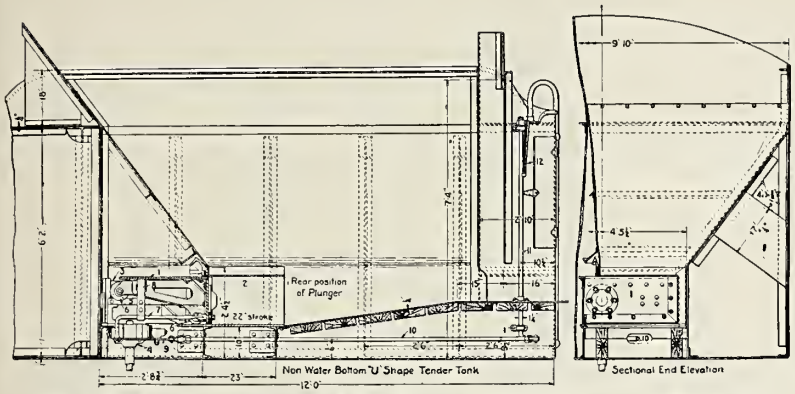

Fig. 1838—Arrangement of Horizontal Coal Pusher on Tender; Locomotive Stoker Company.

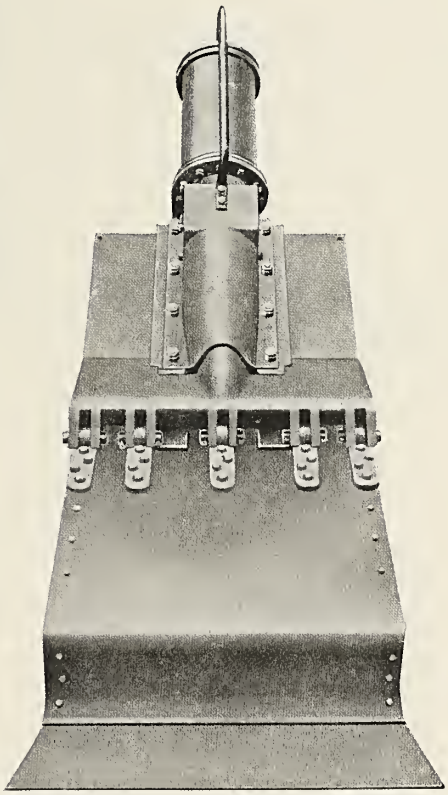

Fig. 1839—Slope Sheet Coal Pusher; Locomotive Stoker Company.

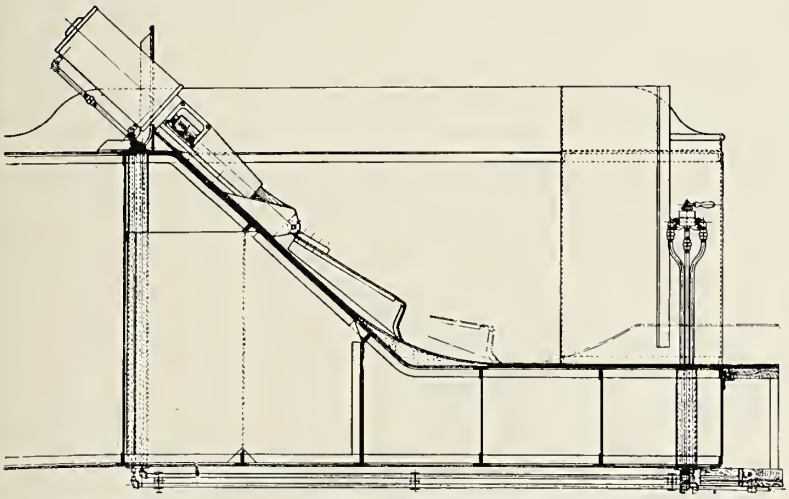

Fig. 1840—Arrangement of Slope Sheet Coal Pusher on Tender; Locomotive Stoker Company.

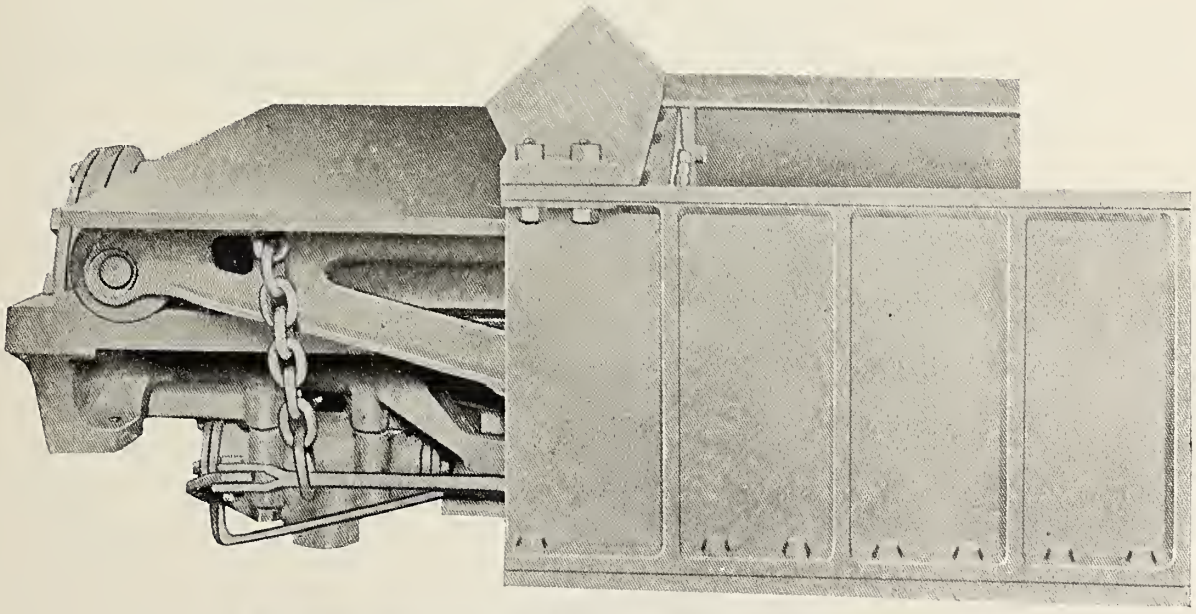

Fig. 1841—Horizontal Coal Pusher; Locomotive Stoker Company.

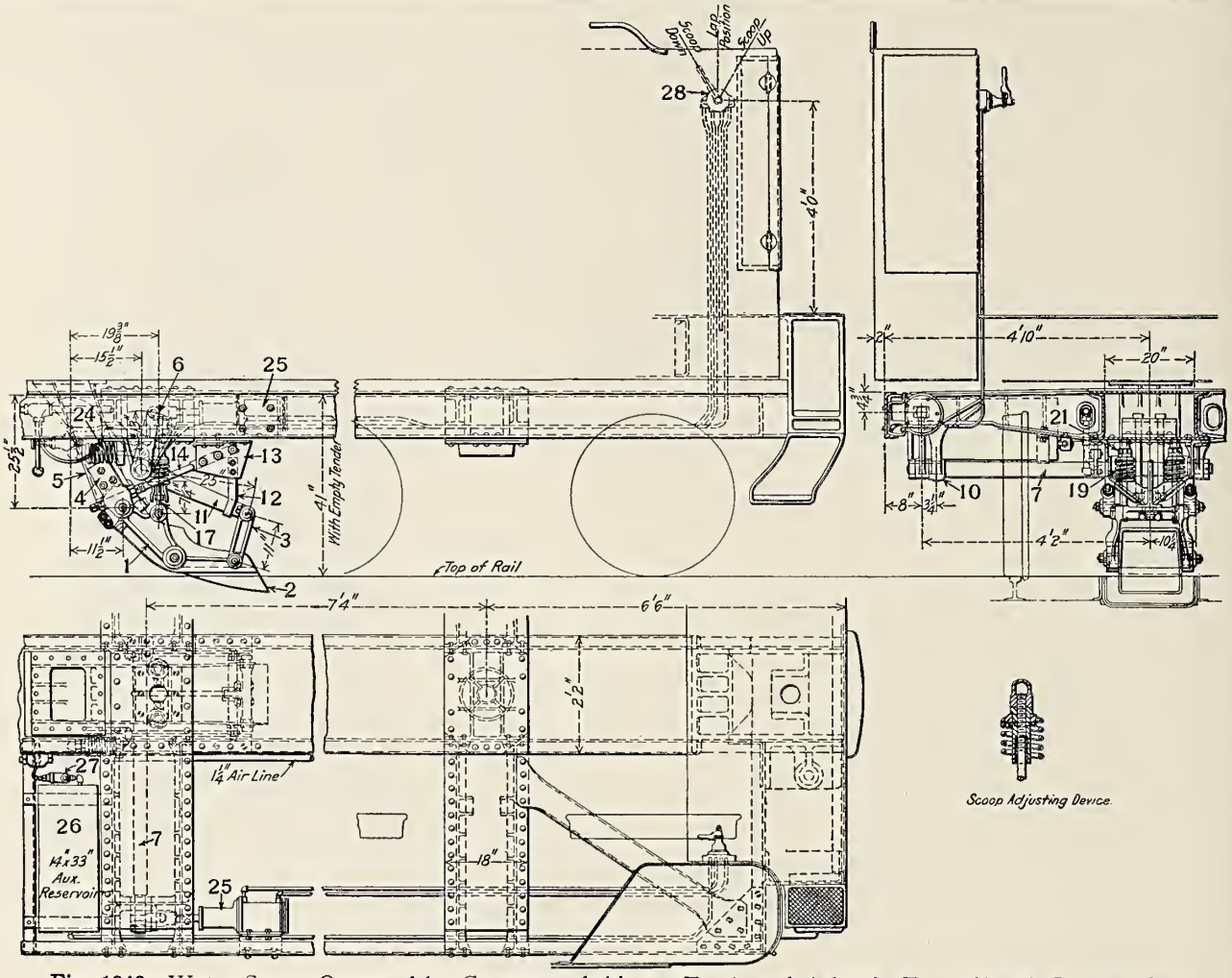

Fig. 1842—Water Scoop Operated by Compressed Air on Tender of Atlantic Type (4-4-2) Locomotive; Pennsylvania Railroad.

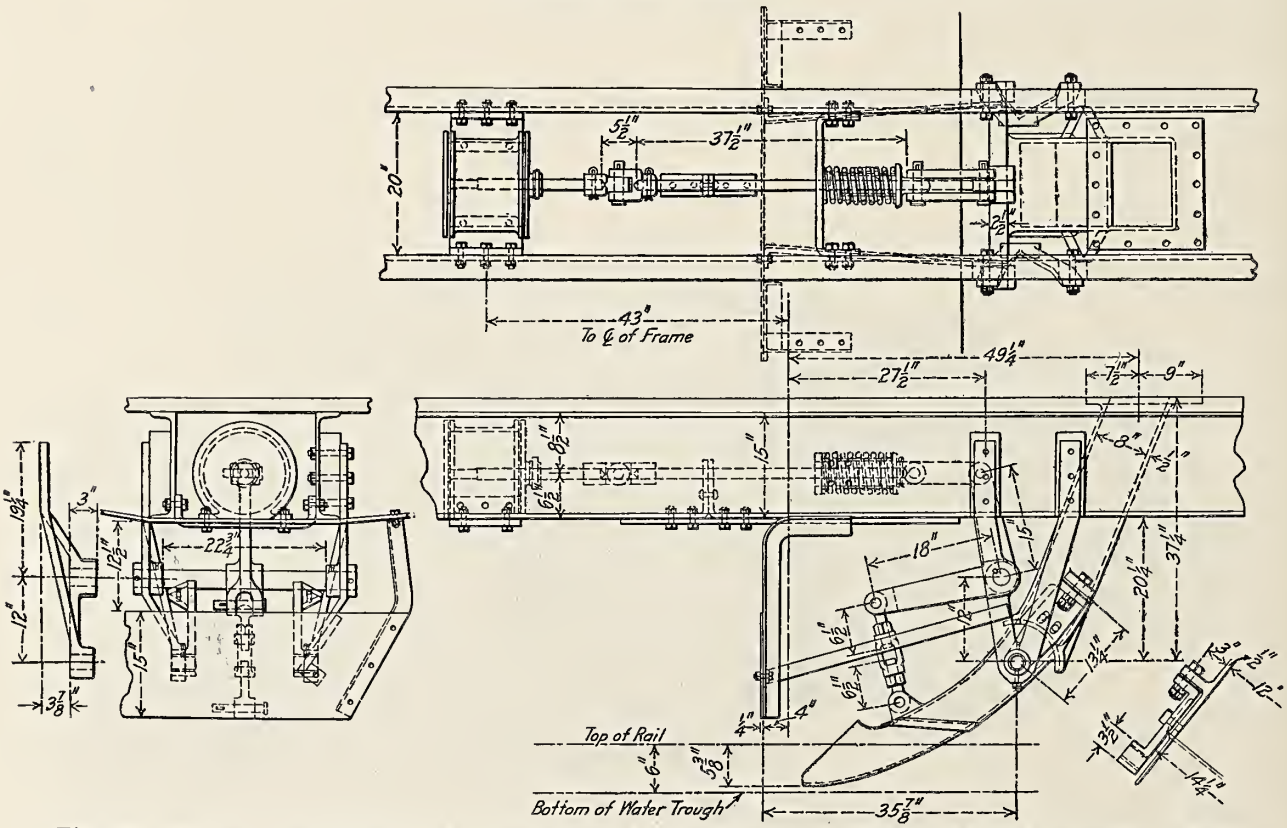

Fig. 1843—Water Scoop Operated by Compressed Air on Tender of Mikado (2-8-2) Locomotive. Built for the Baltimore & Ohio by the Baldwin Locomotive Works.

Numbers Refer to Names of Parts on Page 677.

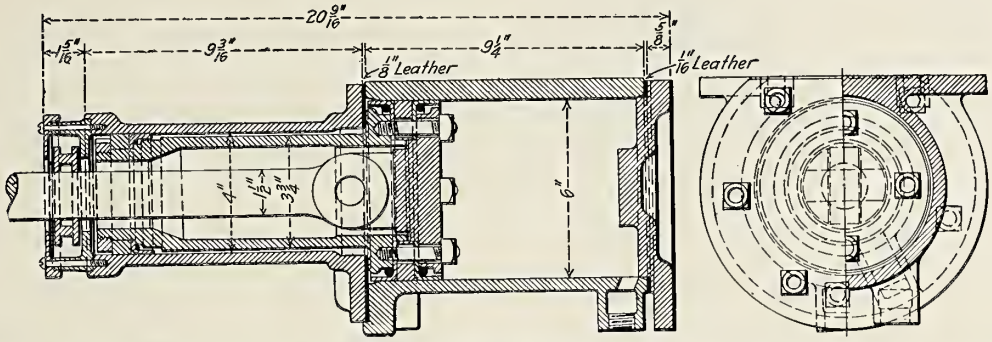

Fig. 1844—Tender Water Scoop Air Cylinder for Atlantic Type (4-4-2) Locomotive; Pennsylvania Railroad.

Names of Parts of Water Scoops, Figs. 1842-1851.

1 *Half Knuckle Joint with Arm or Cradle*
2 *Dipper*
3 *Dipper Link*
4 *Draft or Fulcrum Casting*
5 *External Scoop Pipe*
6 *Short Operating Crank Arm*
7 *Operating Shaft*
8 *Reach Rod*
9 *Reach Rod Jaw*
10 *Bearing for Operating Shaft*
11 *Long Operating Crank Arm*
12 *Crank Arm Guard*
13 *Bracket for Crank Arm Guard*
14 *Brace for External Scoop Pipe*
15 *Protection Shield*
16 *Protection Shield Brace*
17 *Spring Hanger*
18 *Yoke*
19 *Dipper Spring*
20 *Scoop Heater Pipe*
21 *Spring Hanger Cap*
24 *Equalizing Spring*
25 *Air Operating Cylinder*
26 *Air Reservoir*
27 *Air Pressure Governor*
28 *Scoop Operating Valve*

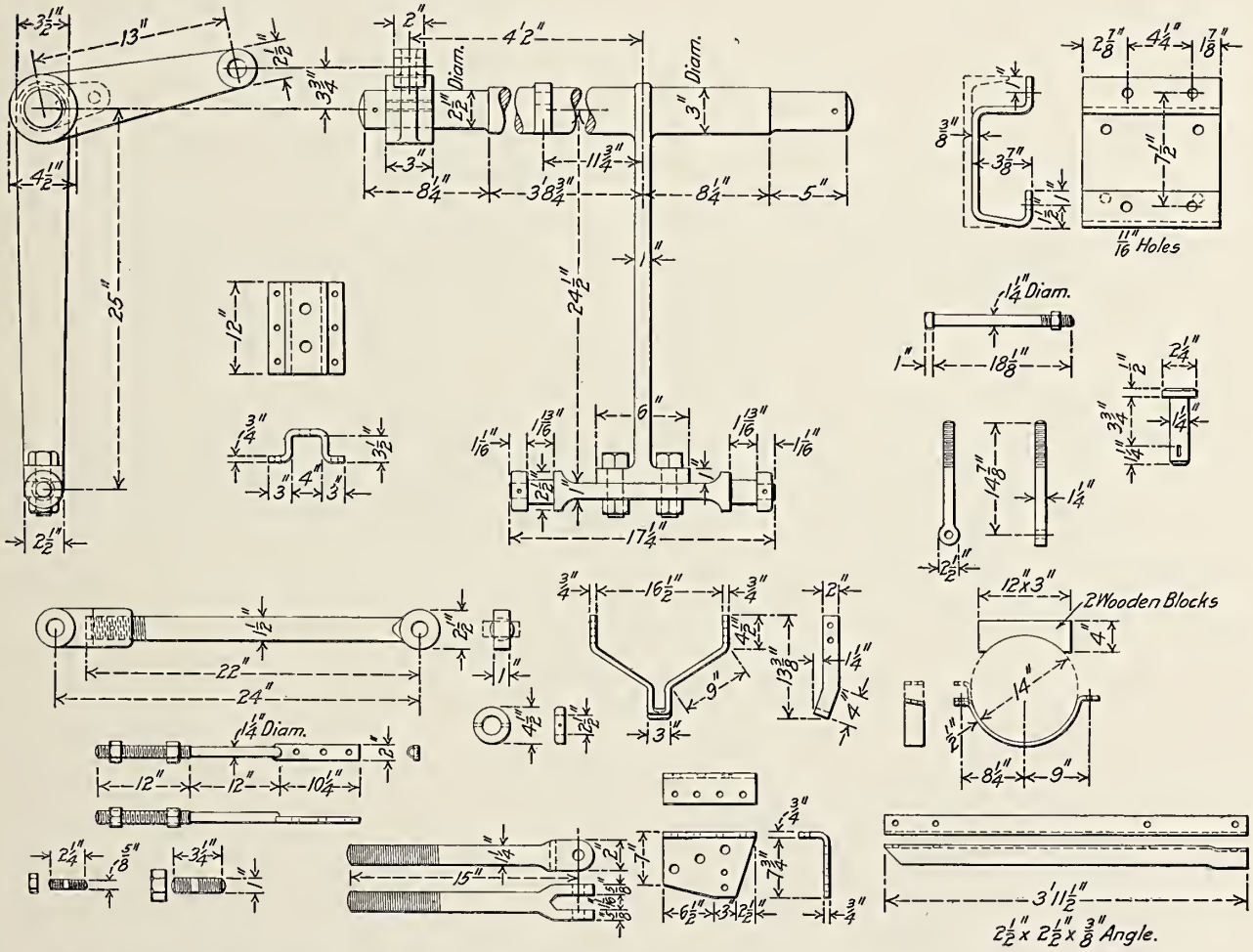

Fig. 1845—Forged Details of Tender Water Scoop for Atlantic Type (4-4-2) Locomotive; Pennsylvania Railroad.

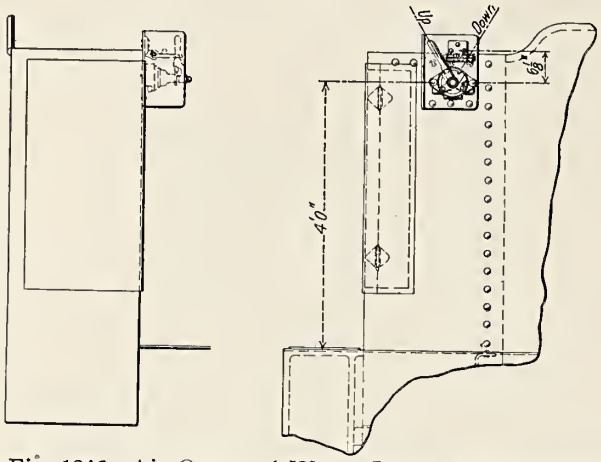

Fig. 1846—Air Operated Water Scoop Valve Handle Lock; Pennsylvania Railroad.

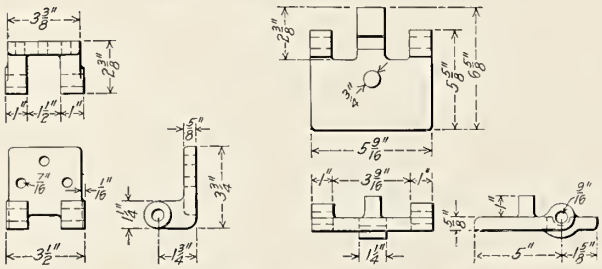

Fig. 1847—Valve Handle Lock and Base Shown in Fig. 1846.

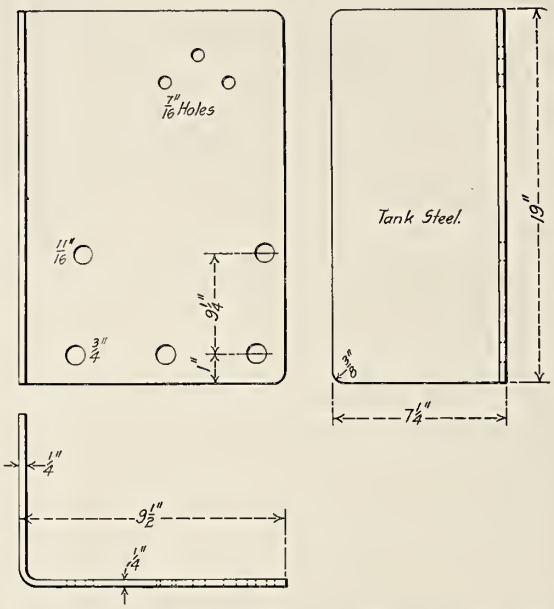

Fig. 1848—Valve Handle Cover Plate for Air Operated Water Scoop of Atlantic Type (4-4-2) Locomotive; Pennsylvania Railroad.

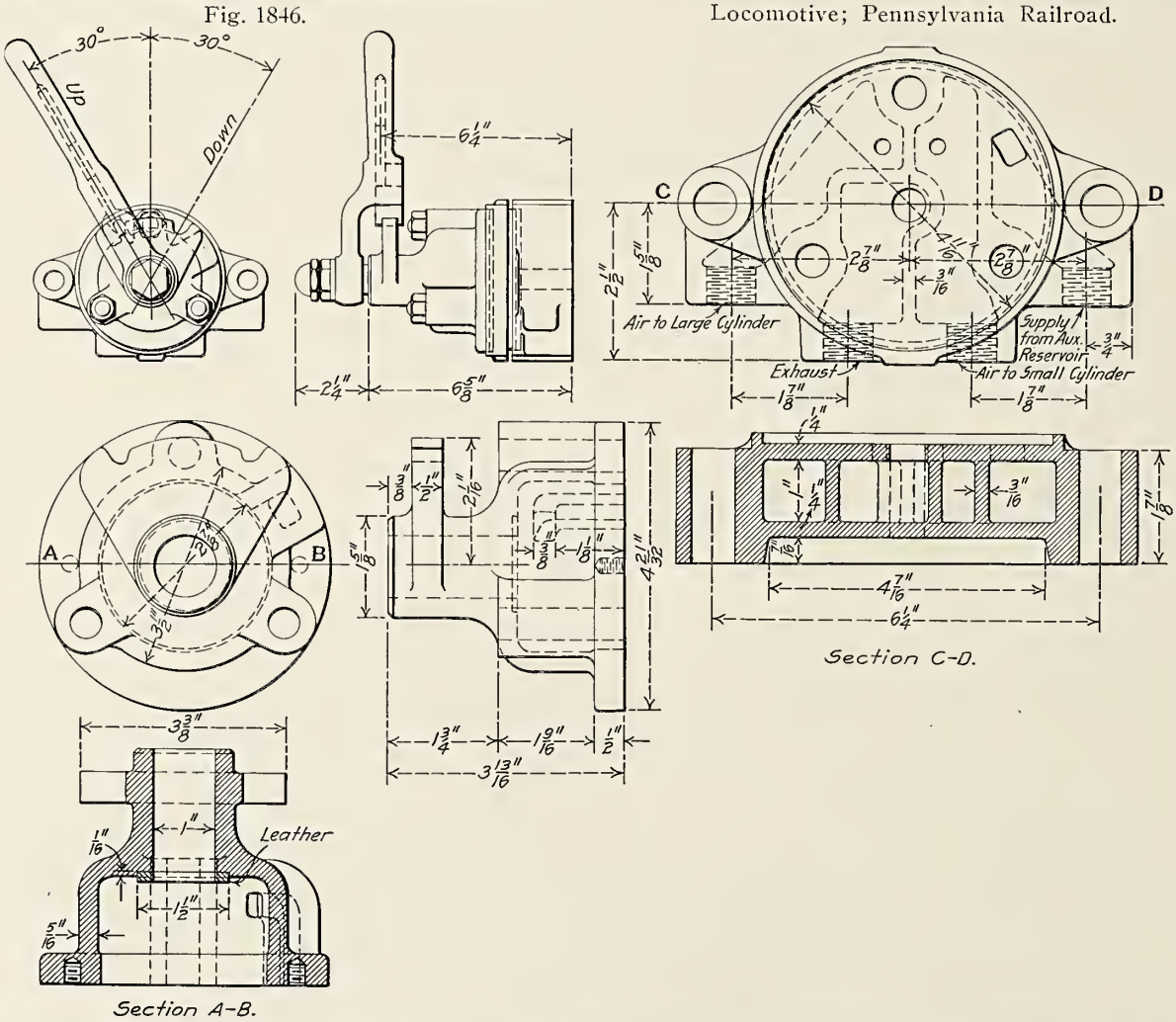

Fig. 1849—Water Scoop Operating Valve on Tender of Atlantic Type (4-4-2) Locomotive; Pennsylvania Railroad.

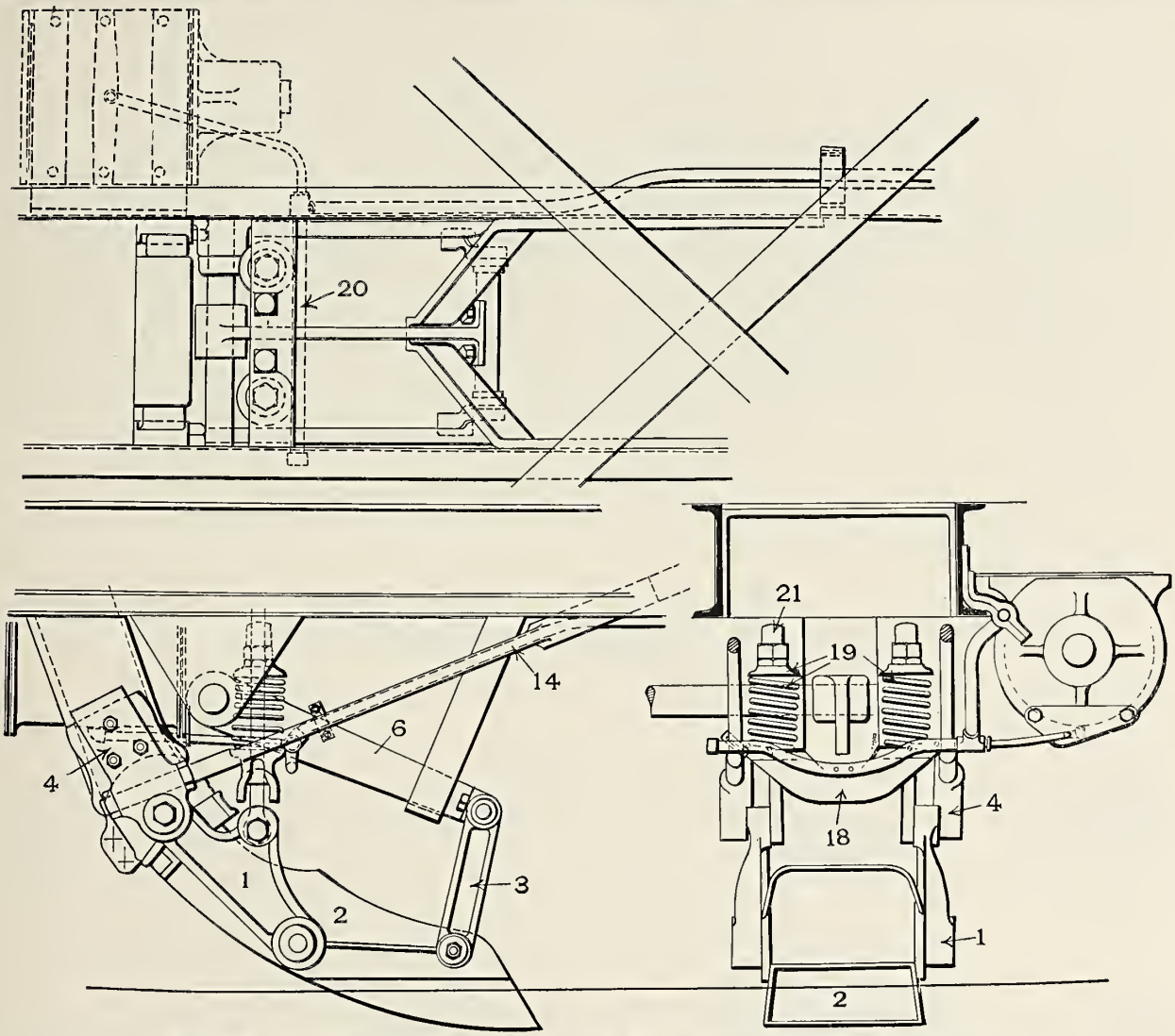

Fig. 1850—Application of Heater Pipes to Water Scoop; Pennsylvania Railroad.

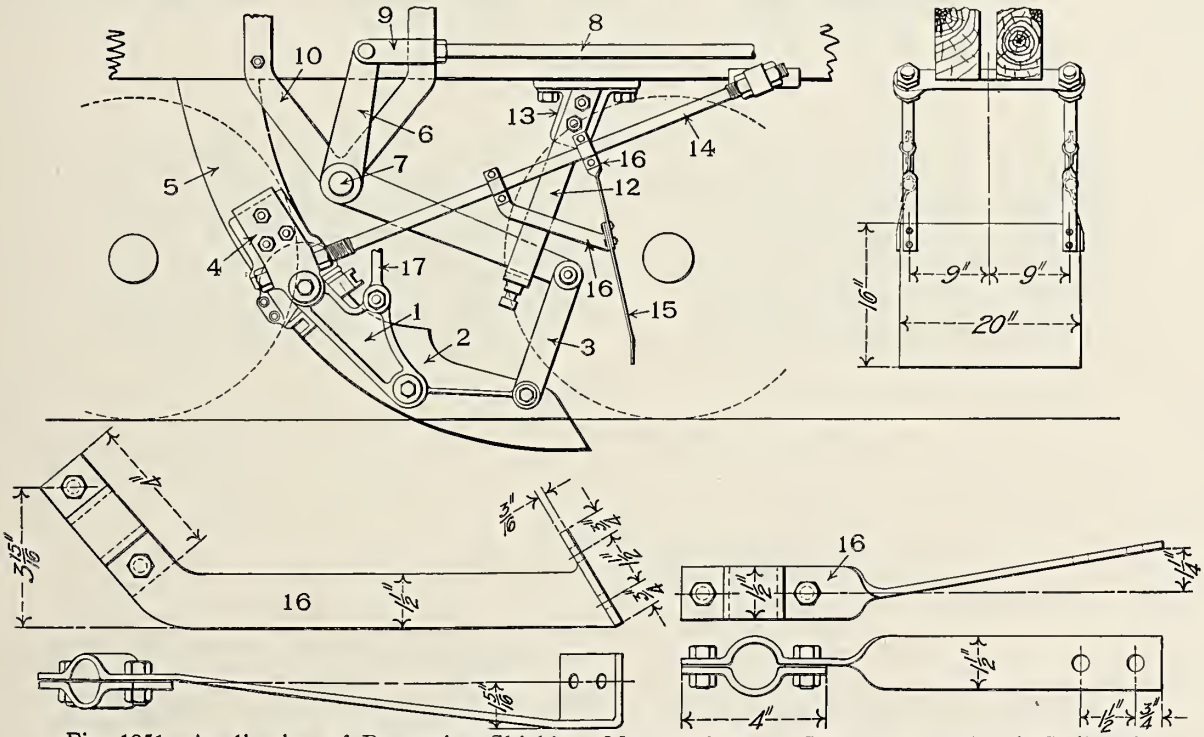

Fig. 1851—Application of Protection Shield to Mouth of Water Scoop; Pennsylvania Railroad.
Numbers Refer to Names of Parts on Page 677.

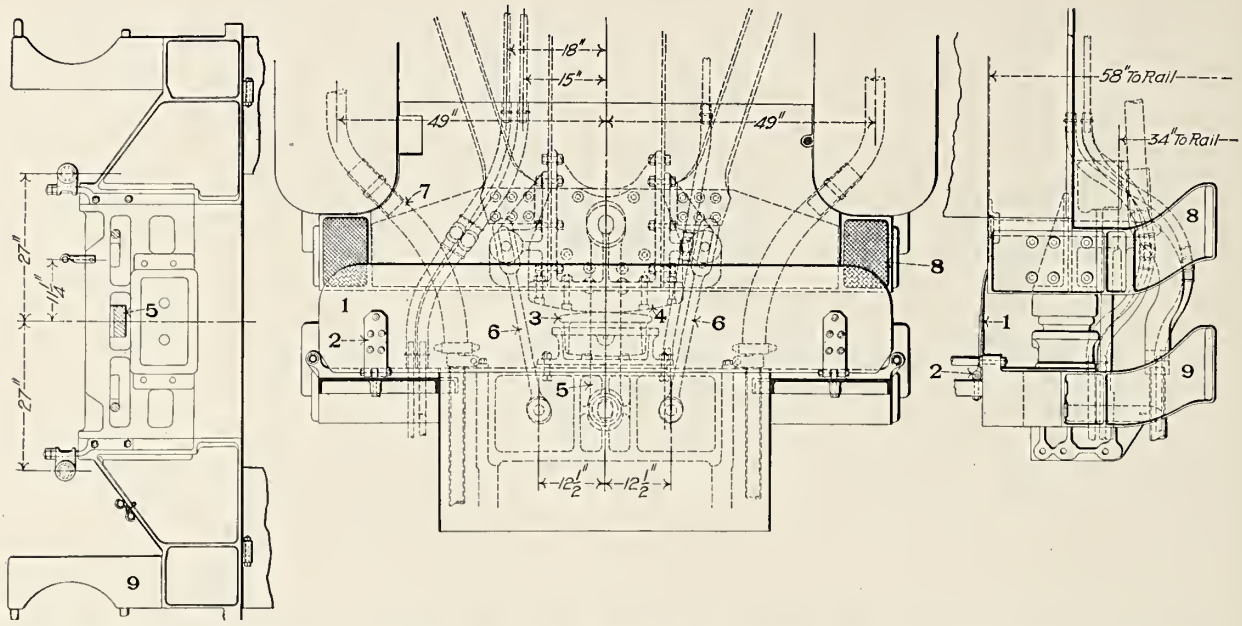

Fig. 1852—Draft Connections Between Engine and Tender on Atlantic Type (4-4-2) Locomotive; Pennsylvania Railroad.

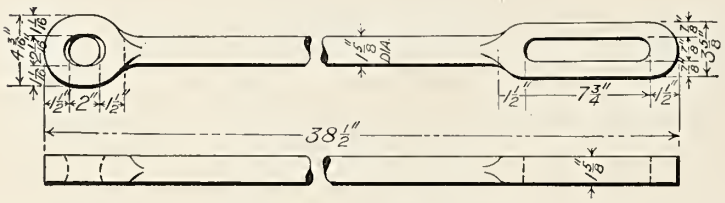

Fig. 1853—Safety Bar.

Names of Parts of Fig. 1852.

1 *Apron*
2 *Apron Hinge*
3 *Engine Chafing Block*
4 *Tender Chafing Block*
5 *Drawbar*
6 *Safety Bar*
7 *Injector Suction Pipe*
8 *Tender Step*
9 *Engine Step*

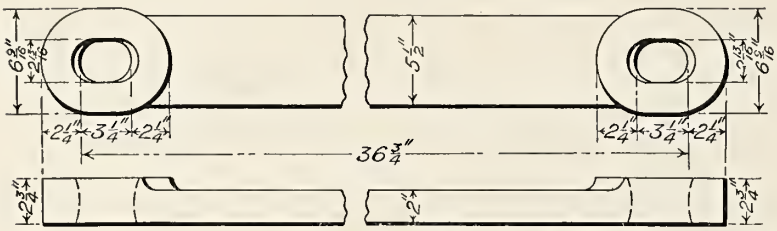

Fig. 1854—Drawbar or Draft Iron and Drawbar Pin.

Figs. 1853-1854 are Details of Draft Connections Between Engine and Tender on Atlantic Type (4-4-2) Locomotive; Pennsylvania Railroad.

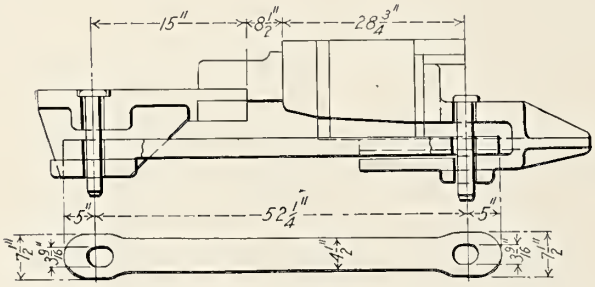

Fig. 1855—Drawbar; Baldwin Locomotive Works.

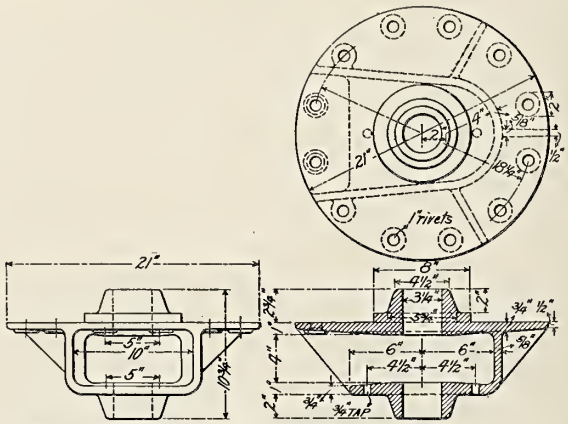

Fig. 1856—Drawbar Pocket Under Tender.

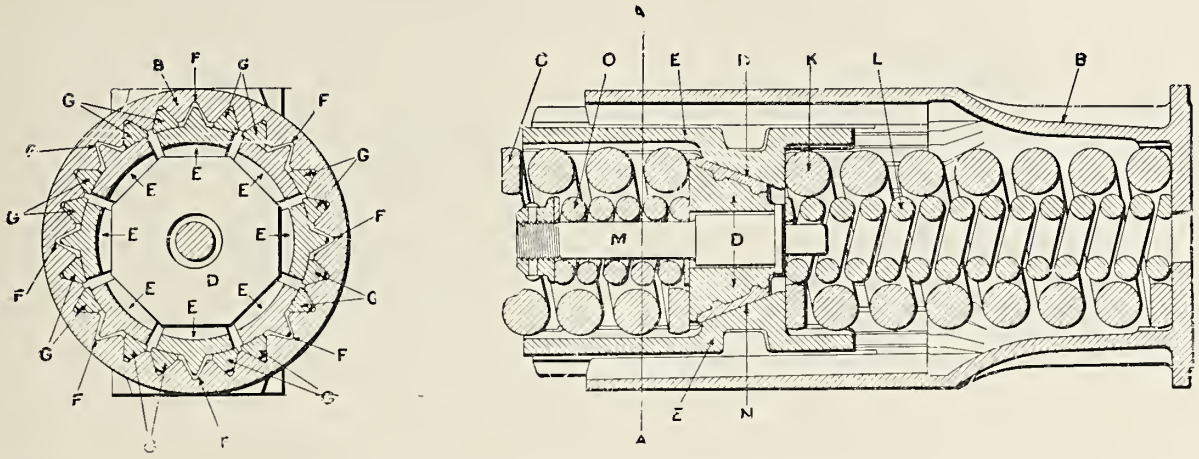

Fig. 1857—Sectional View of Westinghouse Friction Draft Gear; Westinghouse Air Brake Company.

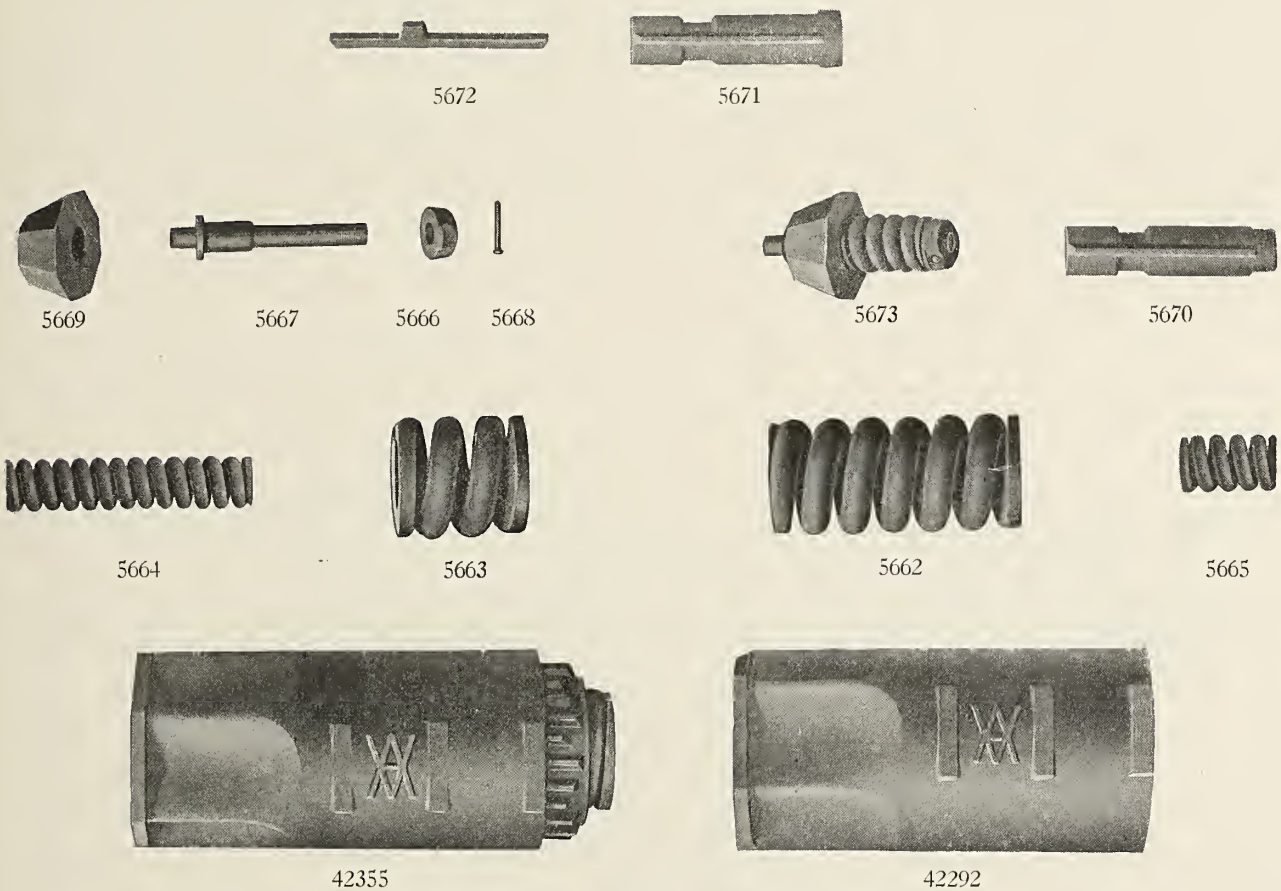

Fig. 1858—Parts of Westinghouse Friction Draft Gear; Westinghouse Air Brake Company.

Names of Parts of Fig. 1858.

42355 *Type D3 Friction Draft Gear, Complete*
42292 *Cylinder Body*
5662 *Release Spring*
5663 *Preliminary Spring*
5664 *Auxiliary Release Spring*
5665 *Auxiliary Preliminary Spring*
5666 *Nut for Release Pin*
5667 *Release Pin*
5668 *Rivet for Securing Release Pin Nut*
5669 *Wedge*
5670 *Female Segment*
5671 *Male Segment*
5672 *Friction Strip*
5673 *Wedge and Release Pin with Auxiliary Preliminary Spring, Complete*

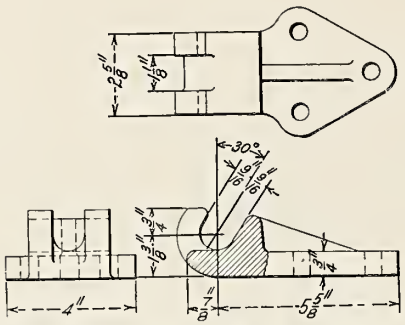

Fig. 1859—Uncoupling Rod Center Bearing.

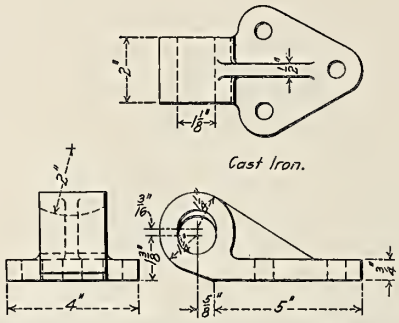

Fig. 1860—Uncoupling Rod End Bearing.

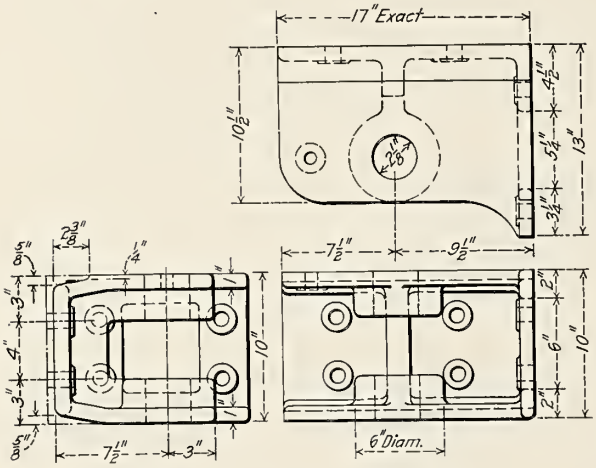

Fig. 1861—Bracket for Safety Bar.

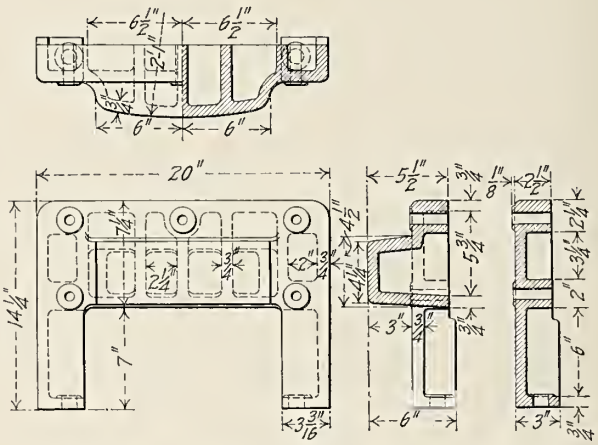

Fig. 1862—Buffer Casting or Striking Plate.

Figs. 1859-1862 are Details of Draft Gear on Tender of Atlantic Type (4-4-2) Locomotive; Pennsylvania Railroad.

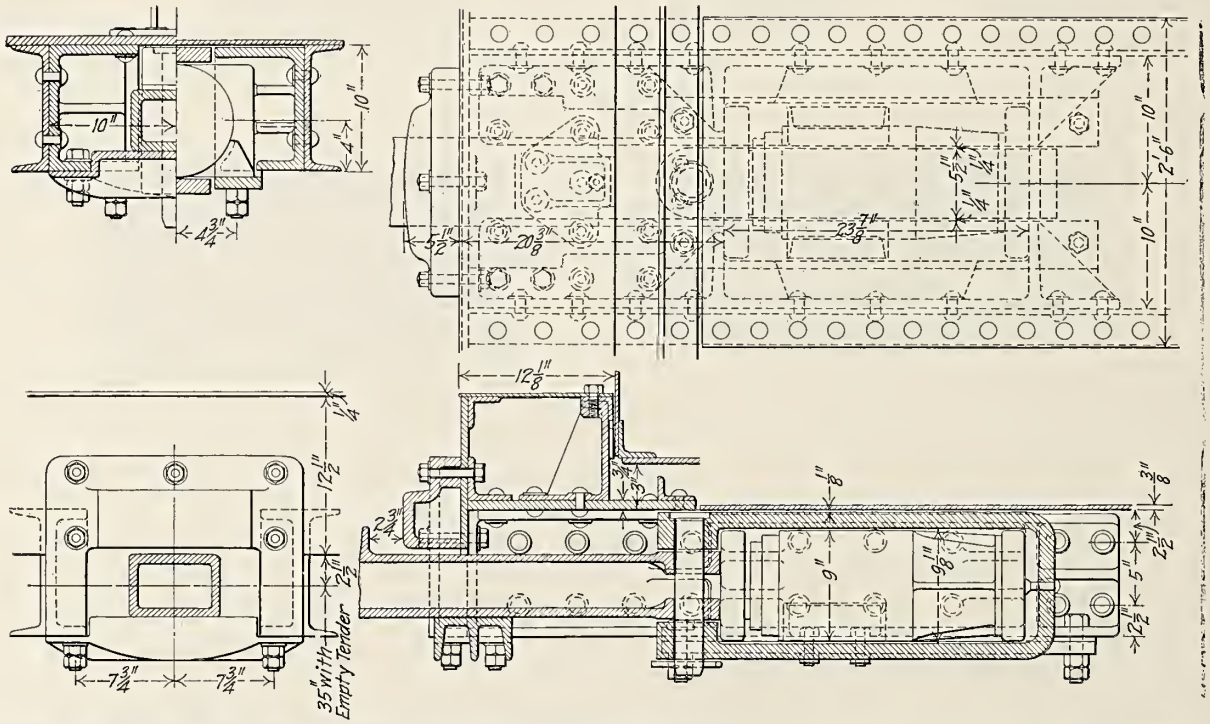

Fig. 1863—Westinghouse Friction Draft Gear as Applied to Tender of Atlantic Type (4-4-2) Locomotive; Pennsylvania Railroad.

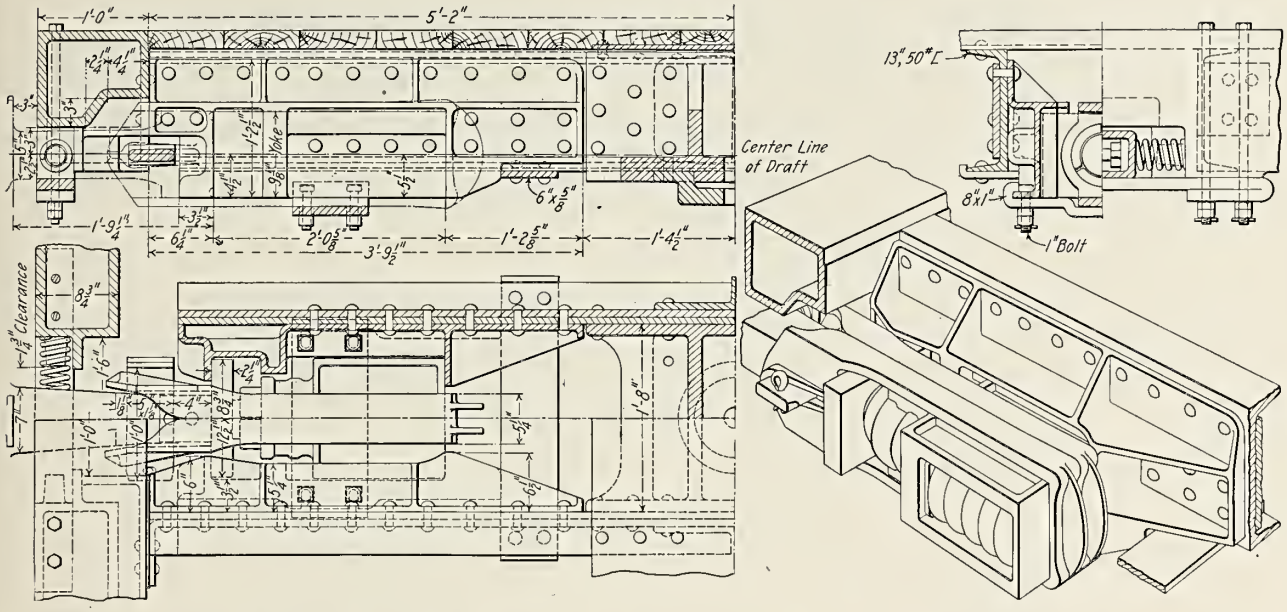

Fig. 1864—Miner Friction Draft Gear, Class A-18, and Two-Part Cast Steel Yoke with Key Connection to Coupler as Applied to Tenders; W. H. Miner.

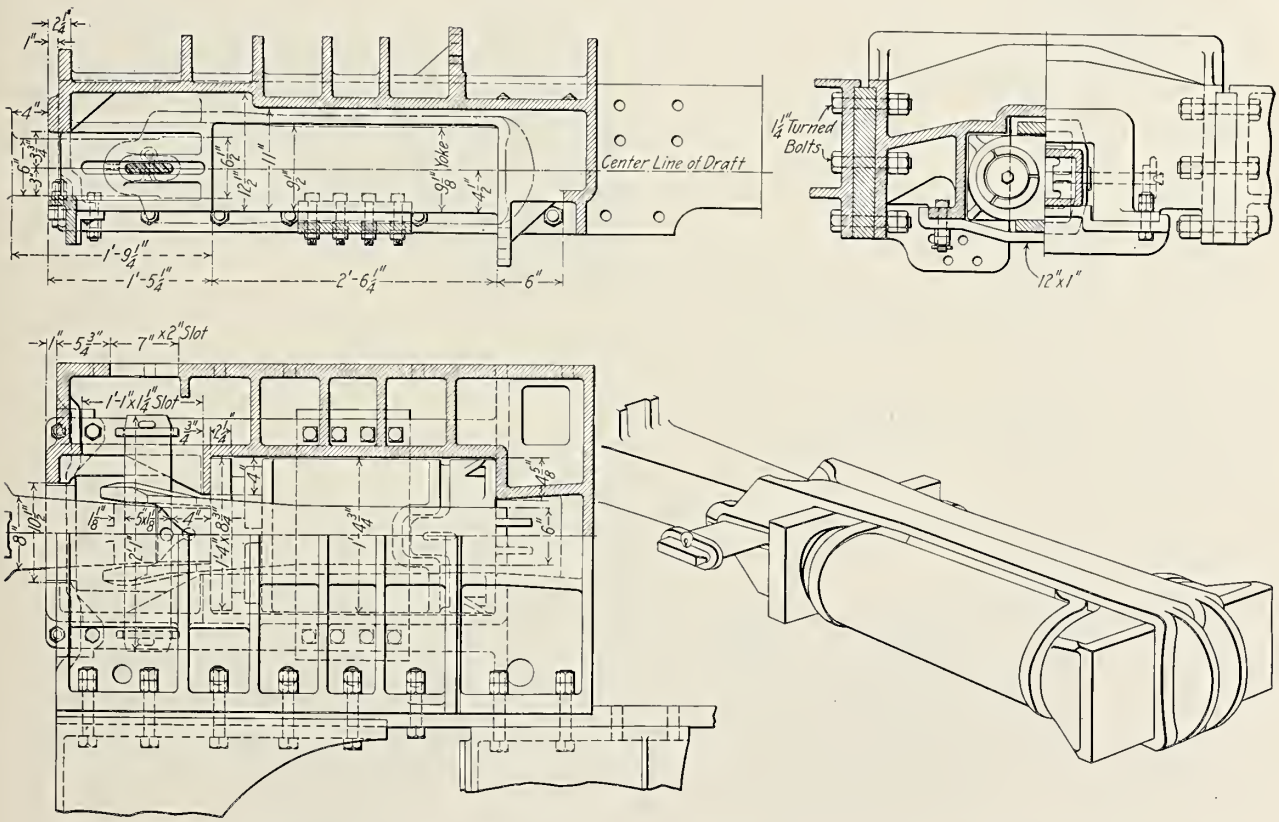

Fig. 1865—Miner Friction Draft Gear, Class A-46, and Two-Part Cast Steel Yoke with Key Connection to Coupler as Applied to Locomotives; W. H. Miner.

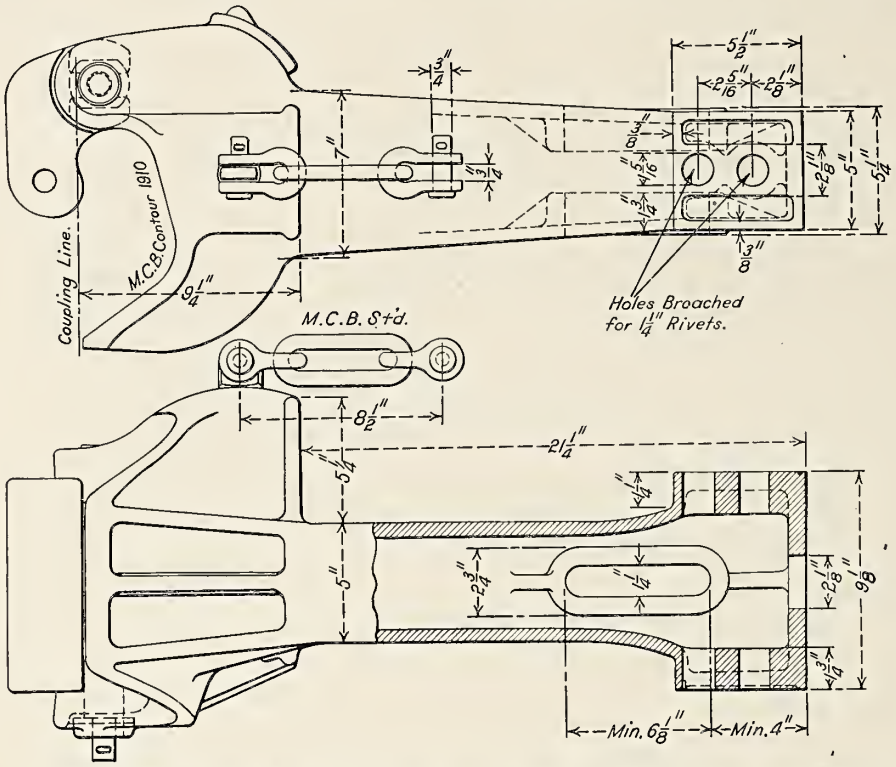

Fig. 1866—Gould Tender Coupler No. Z334; Gould Coupler Company.

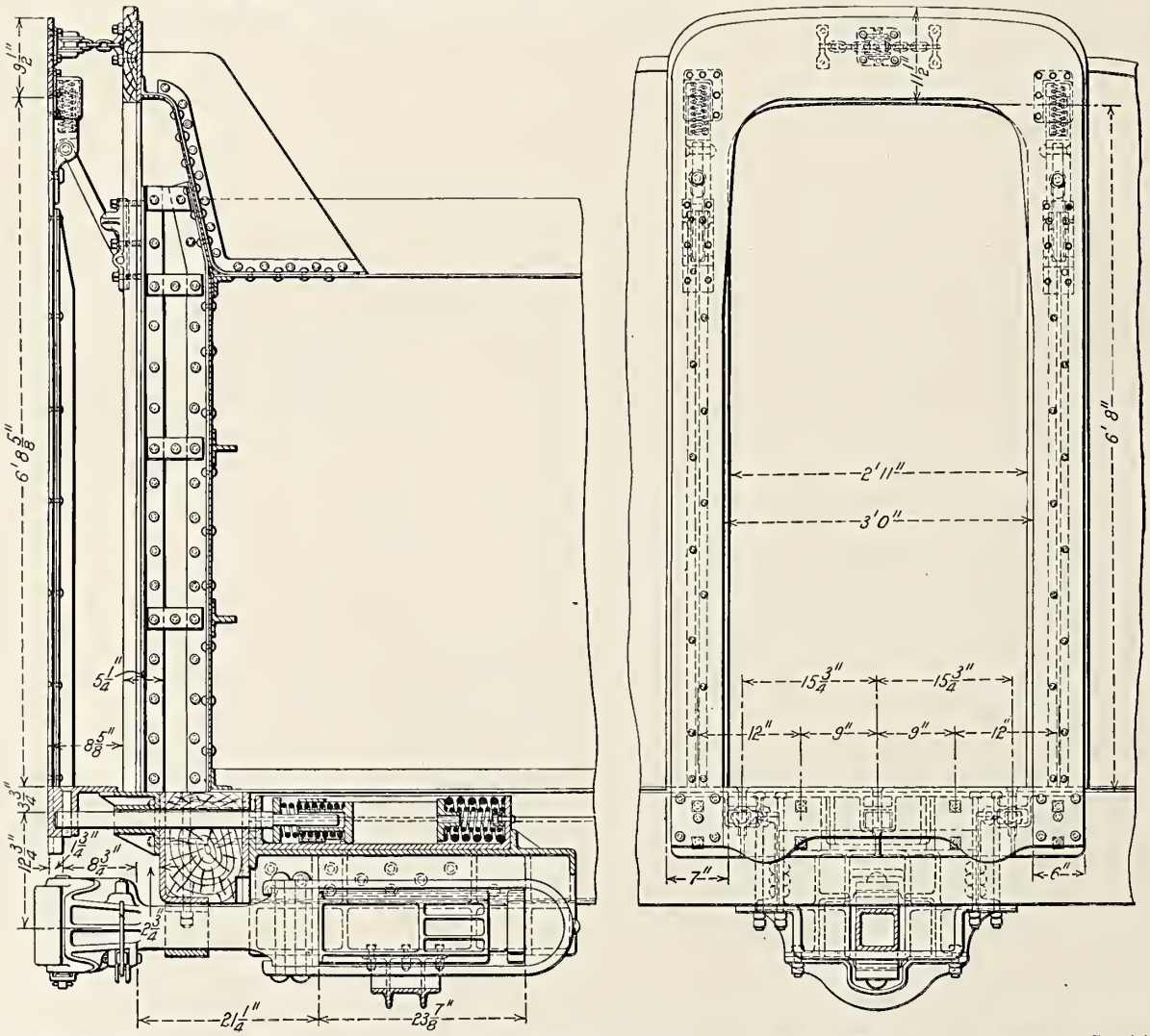

Fig. 1867—Application of Gould Vestibule, Coupler, Friction Buffer and Draft Gear to Tenders; Gould Coupler Company.

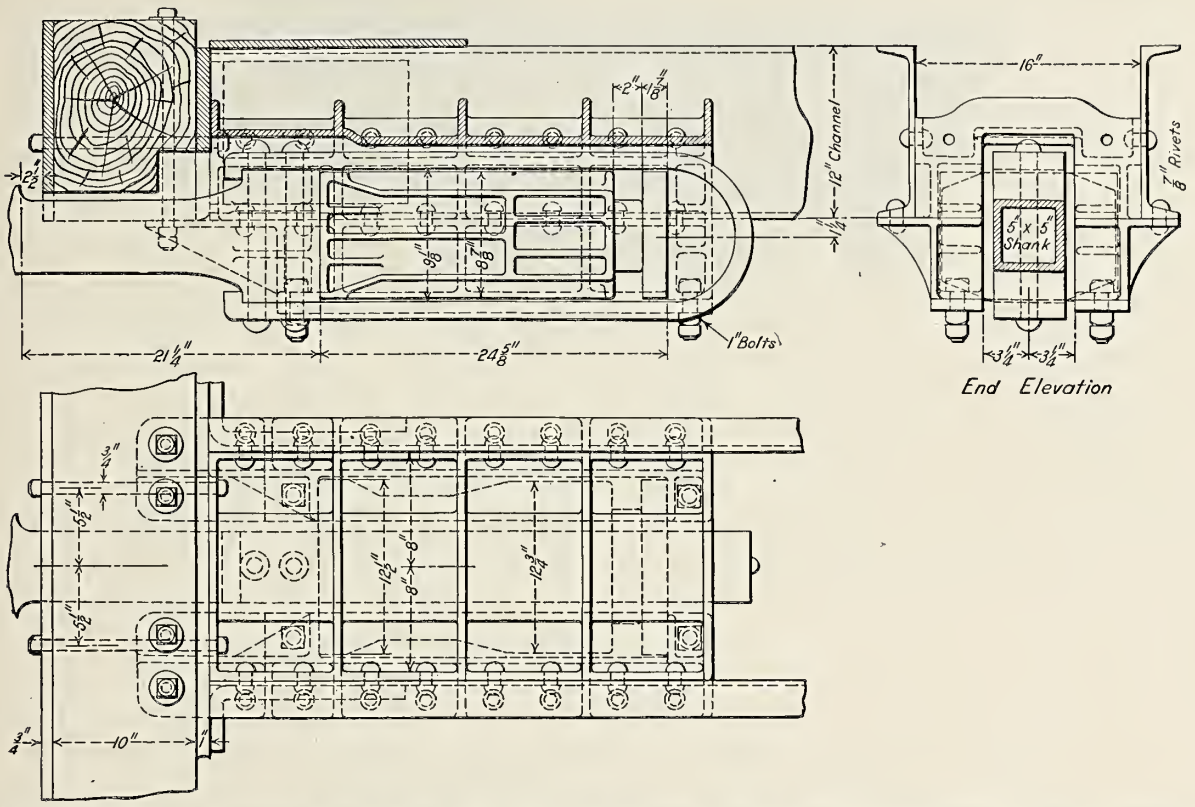

Fig. 1868—Gould Friction Draft Gear, No. 110, for Tenders with Steel Underframes; Gould Coupler Company.

Fig. 1869—Gould Spring Buffer Plate; Gould Coupler Company.

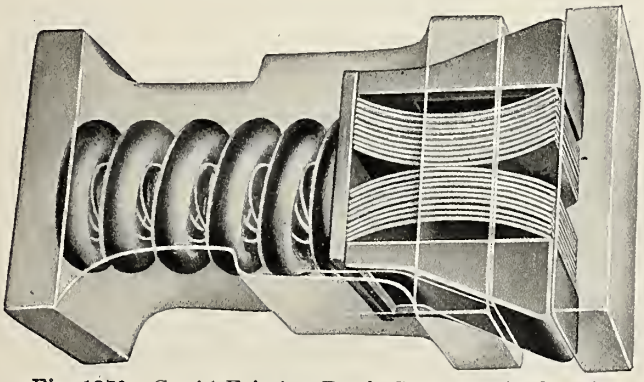

Fig. 1870—Gould Friction Draft Gear; Gould Coupler Company.

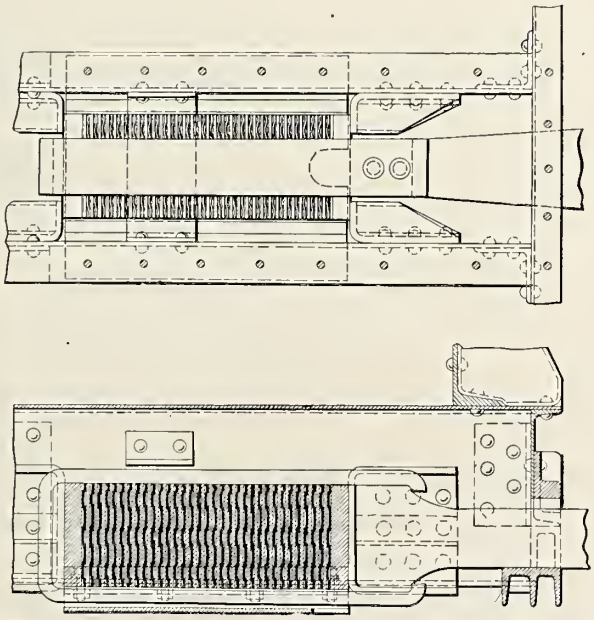

Fig. 1871—Slick Friction Draft Gear; Cambria Steel Company.

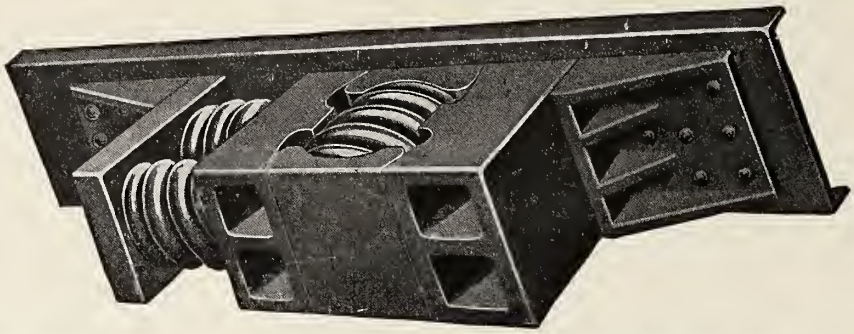

Fig. 1872—Butler Friction Draft Gear; Butler Drawbar Attachment Company.

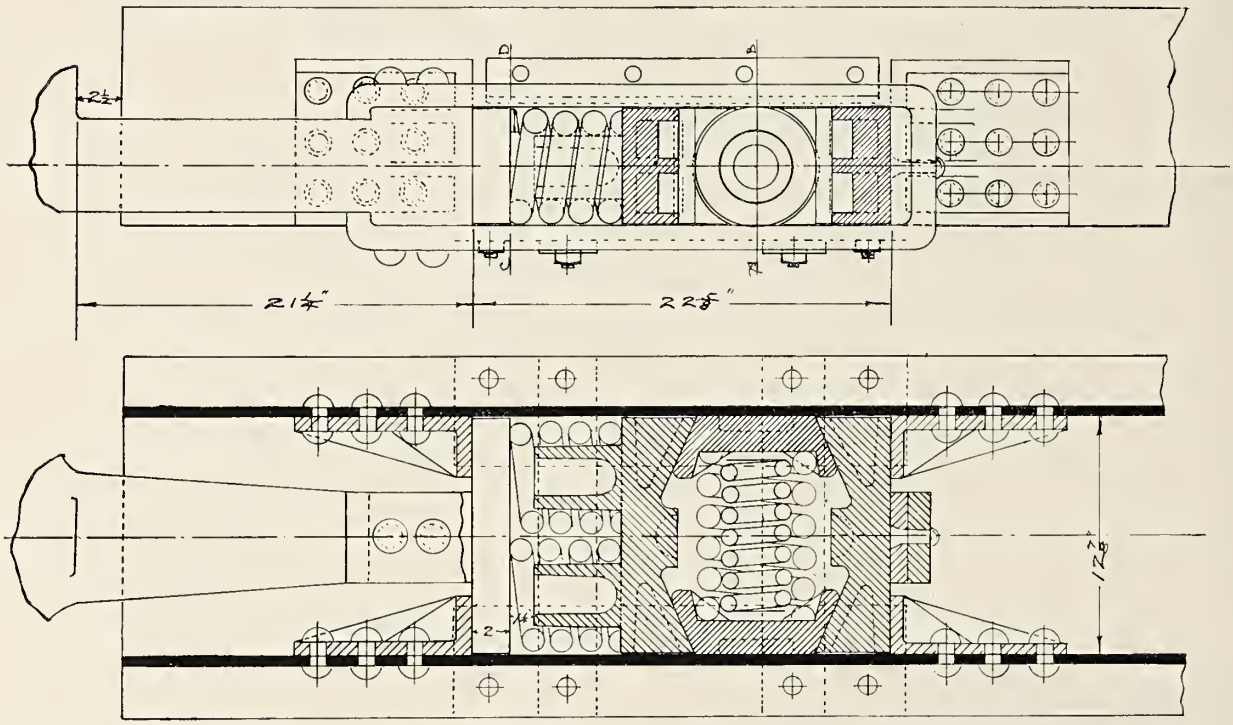

Fig. 1873—Butler Friction Draft Gear No. 370; Butler Drawbar Attachment Company.

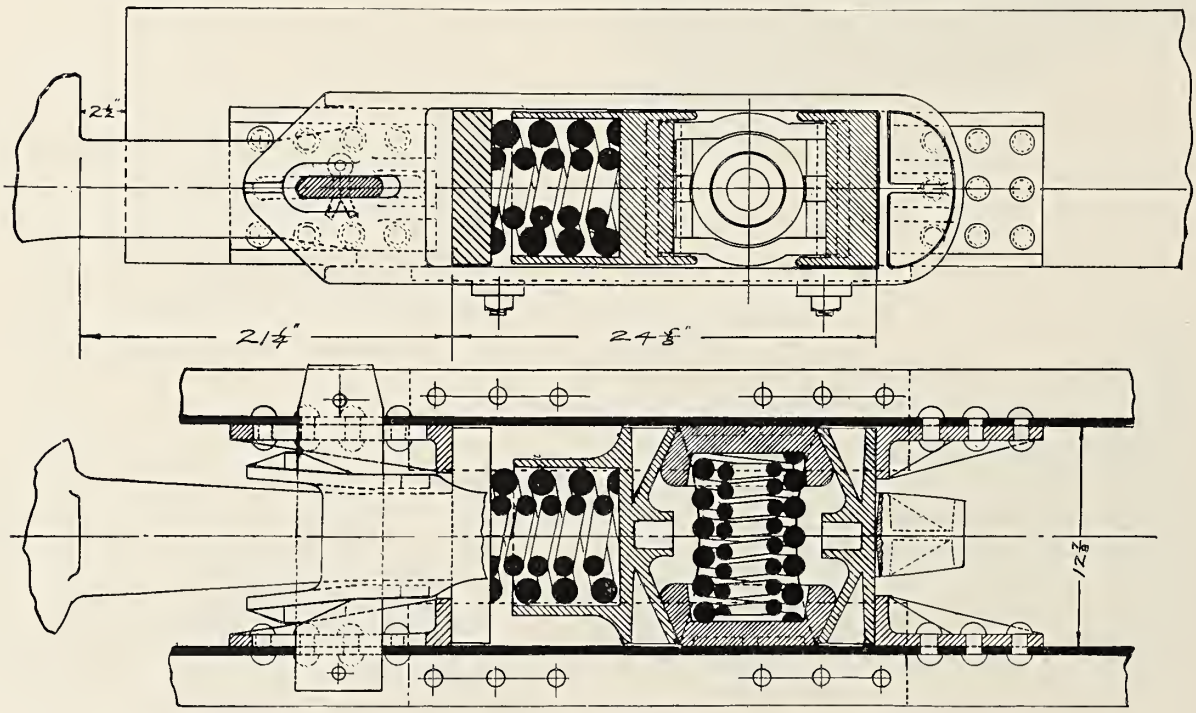

Fig. 1874—Butler Friction Draft Gear No. 350; Butler Drawbar Attachment Company.

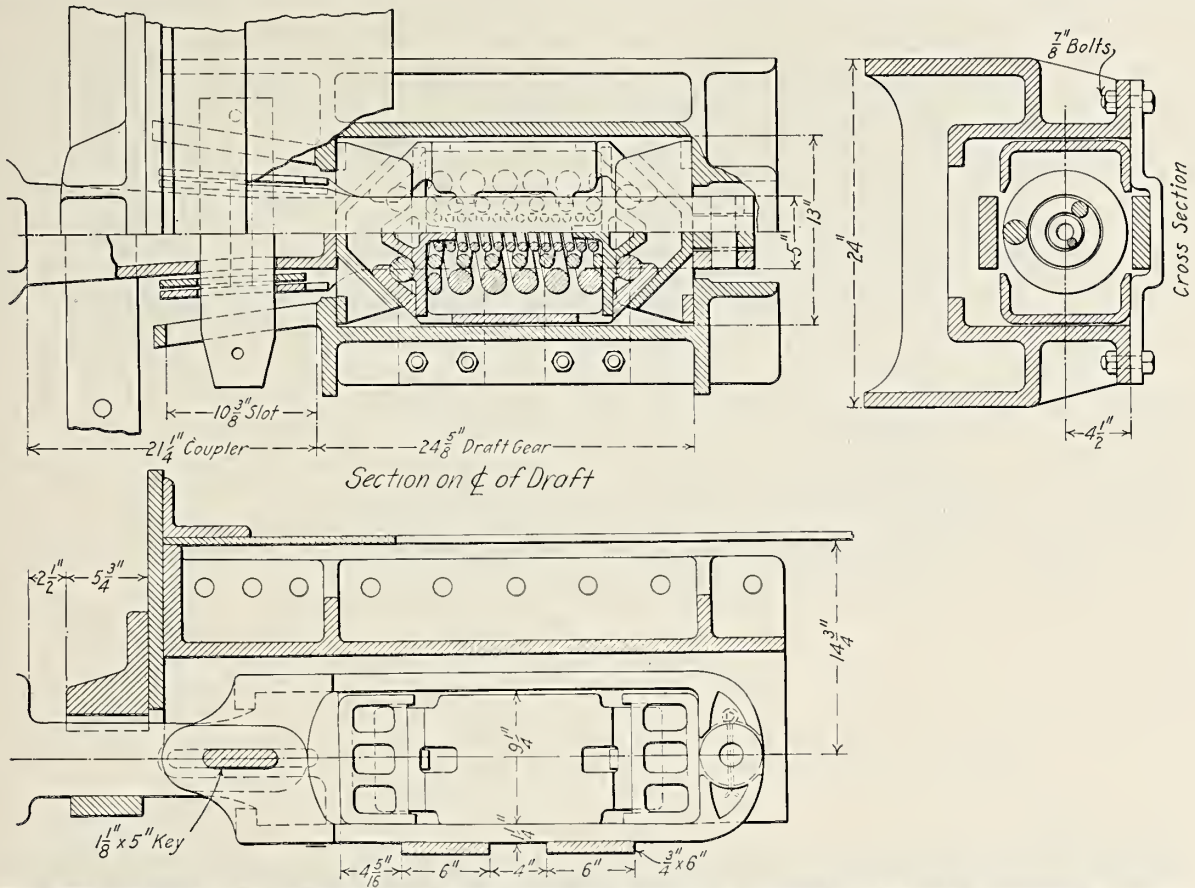

Fig. 1875—Murray Cast Steel Friction Draft Gear as Applied to Georgia Railroad Tenders; Keyoke Railway Equipment Company.

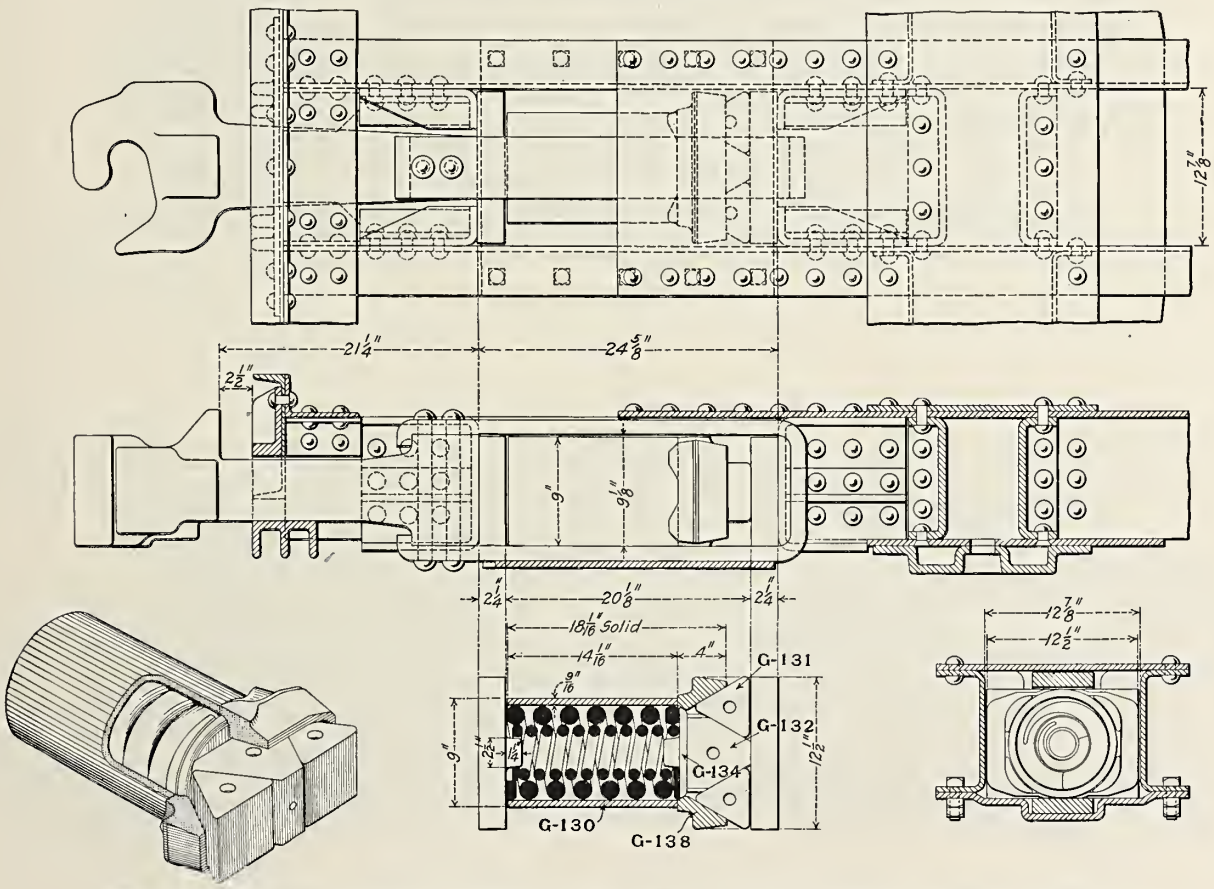

Fig. 1876—Sessions Standard Friction Draft Gear, Type K; Standard Coupler Company.

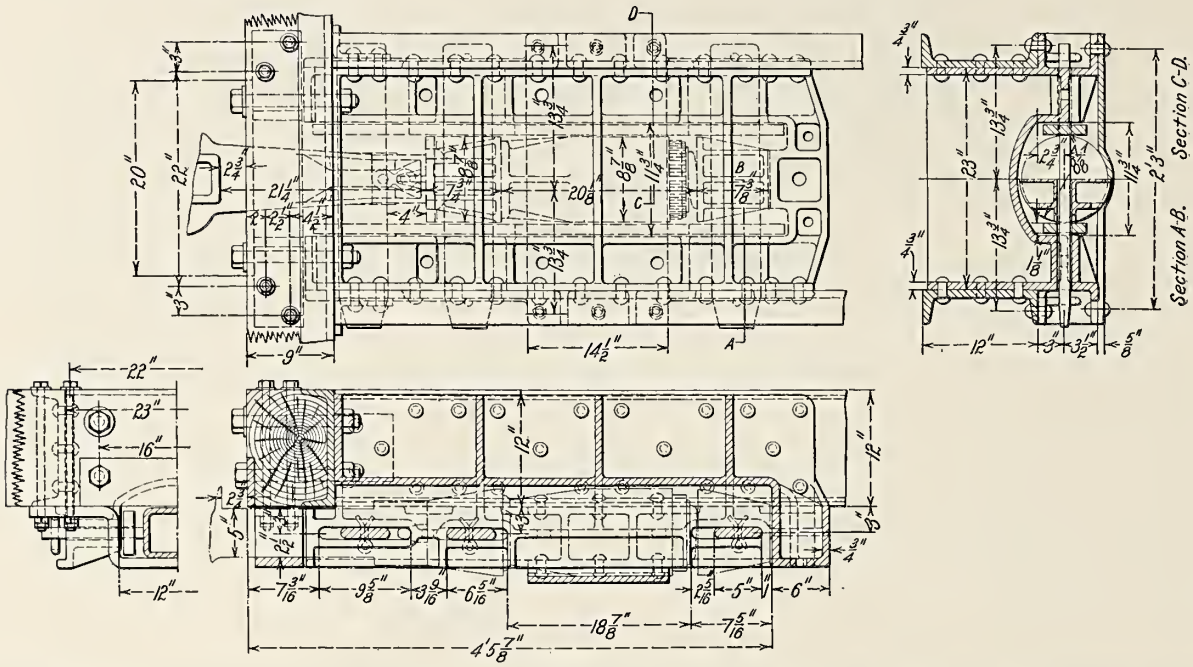

Fig. 1877—Farlow Attachments in Combination with a Friction Draft Gear as Applied to Tenders with Steel Underframes; T. H. Symington Company.

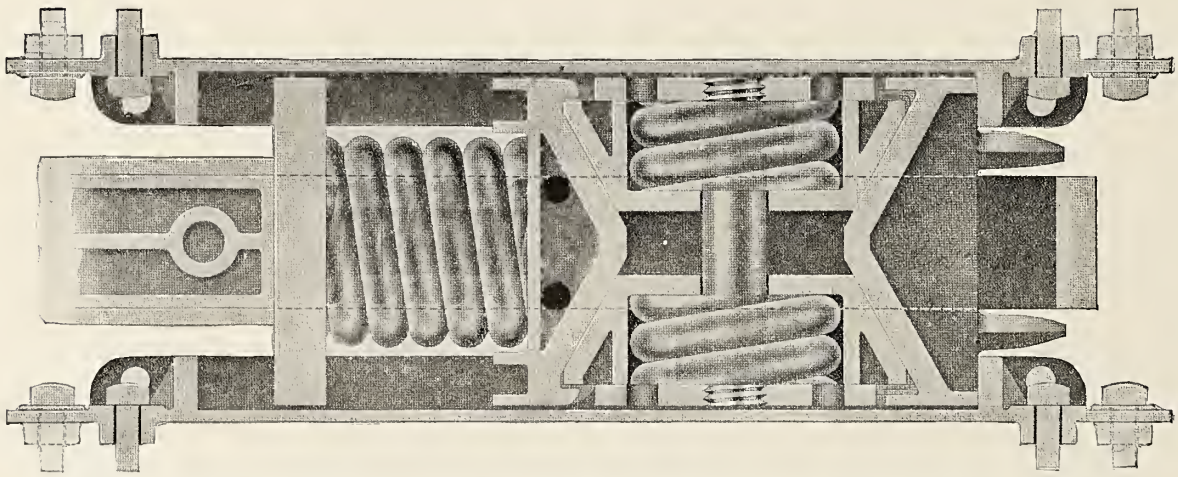

Fig. 1878—Republic Friction Draft Gear, Compressed; Western Railway Equipment Company.

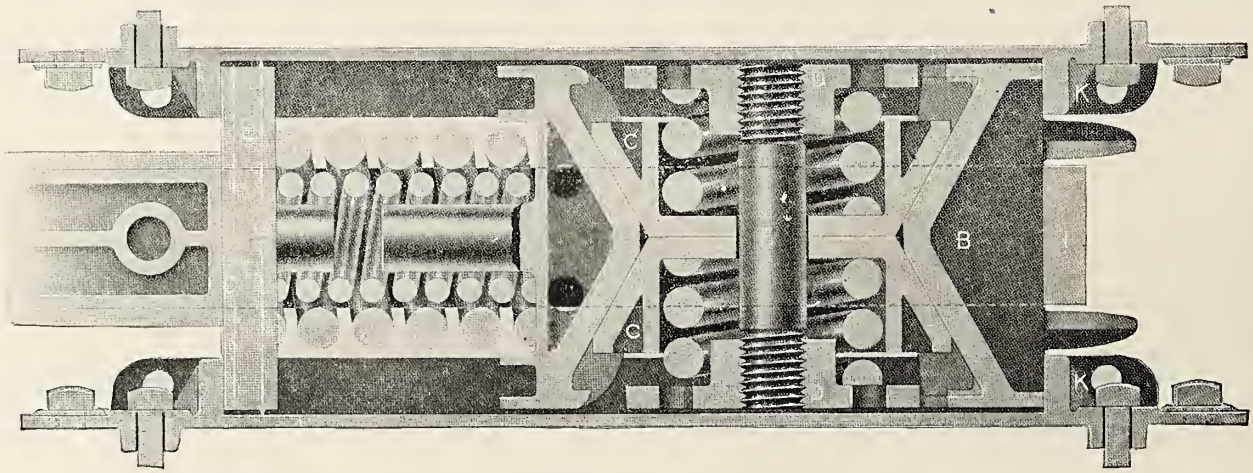

Fig. 1879—Republic Friction Draft Gear, Free; Western Railway Equipment Company.

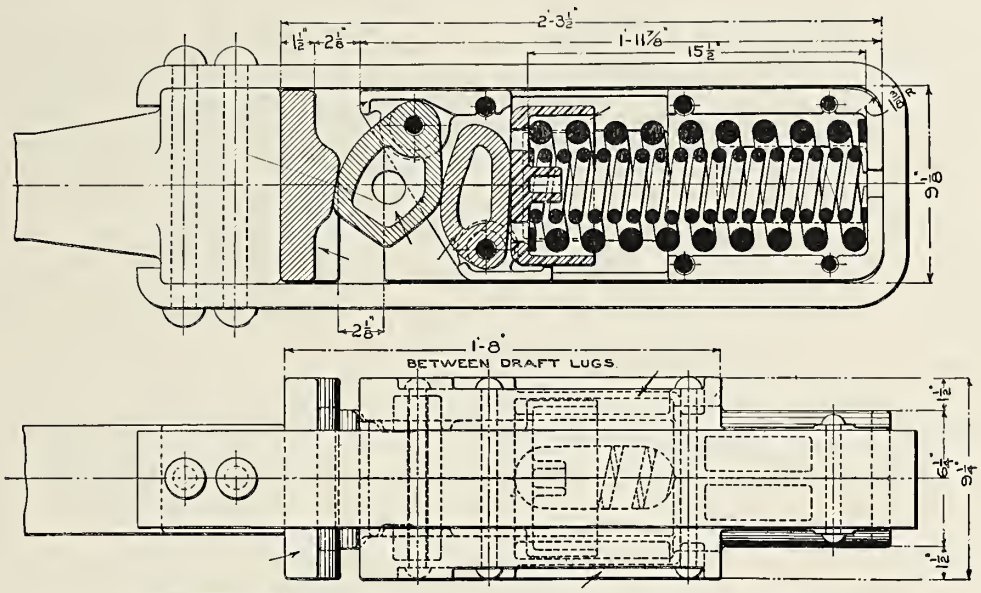

Fig. 1880—McCord Draft Gear, Type D; McCord & Company

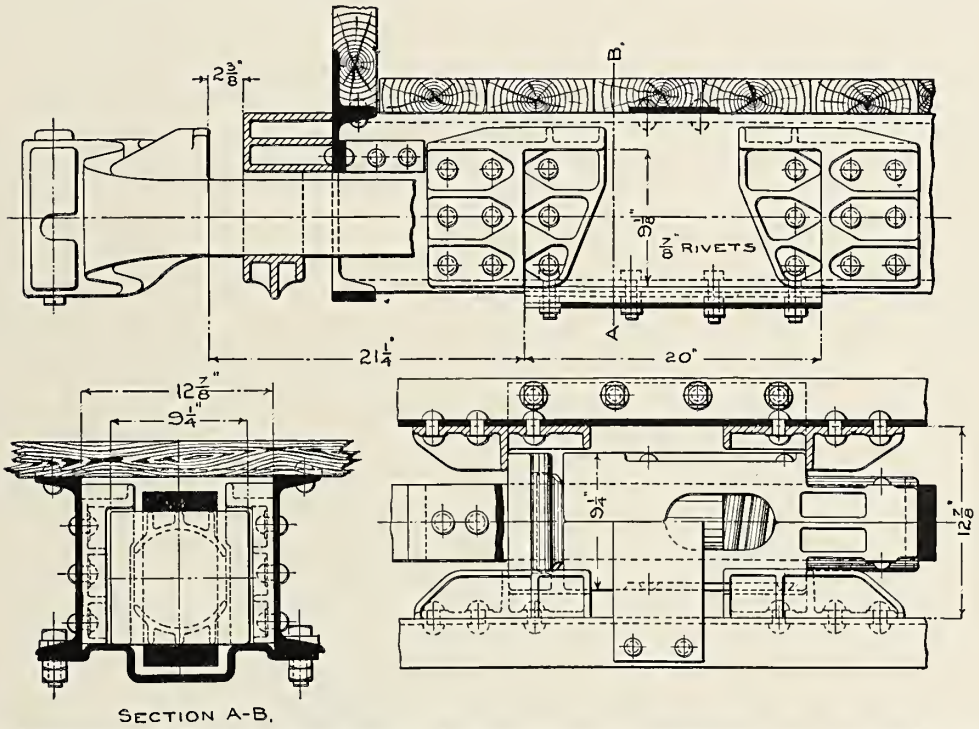

Fig. 1881—Application of Type D Draft Gear to 100,000-lb. Steel Underframe Car. McCord & Company.

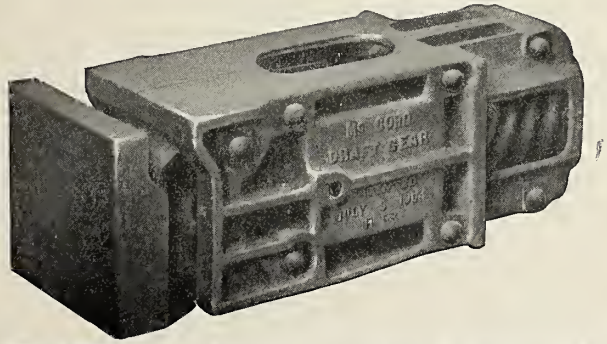

Fig. 1882—McCord Draft Gear, Type D; McCord & Company.

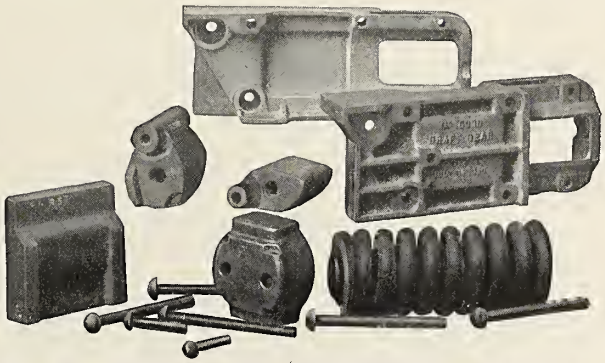

Fig. 1883—Parts of McCord Draft Gear; Type D; McCord & Company.

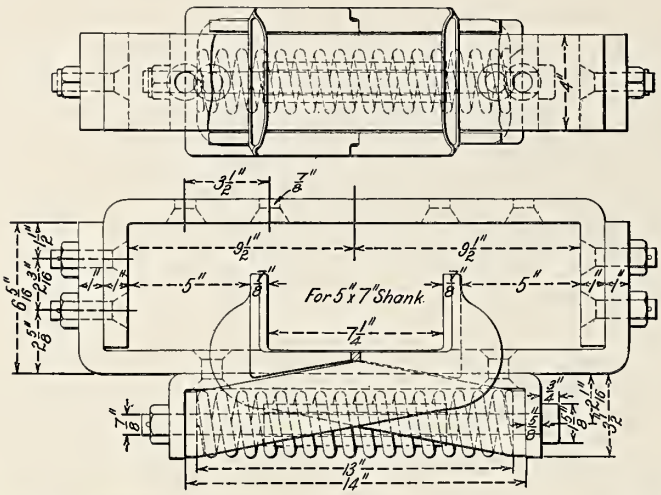

Fig. 1884—National Centering Yoke for 5 in. x 7 in. Shank M. C. B. Couplers; National Car Coupler Company.

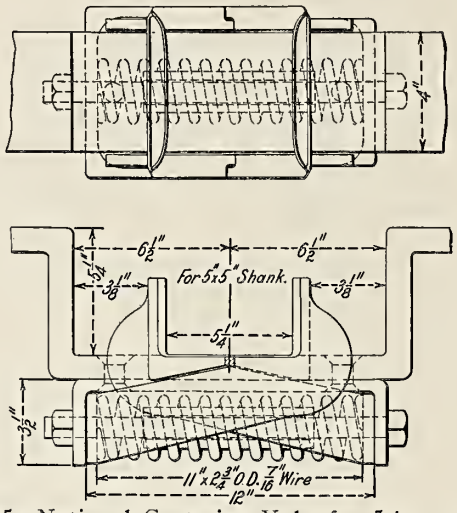

Fig. 1885—National Centering Yoke for 5 in. x 5 in. M. C. B. Couplers; National Car Coupler Company.

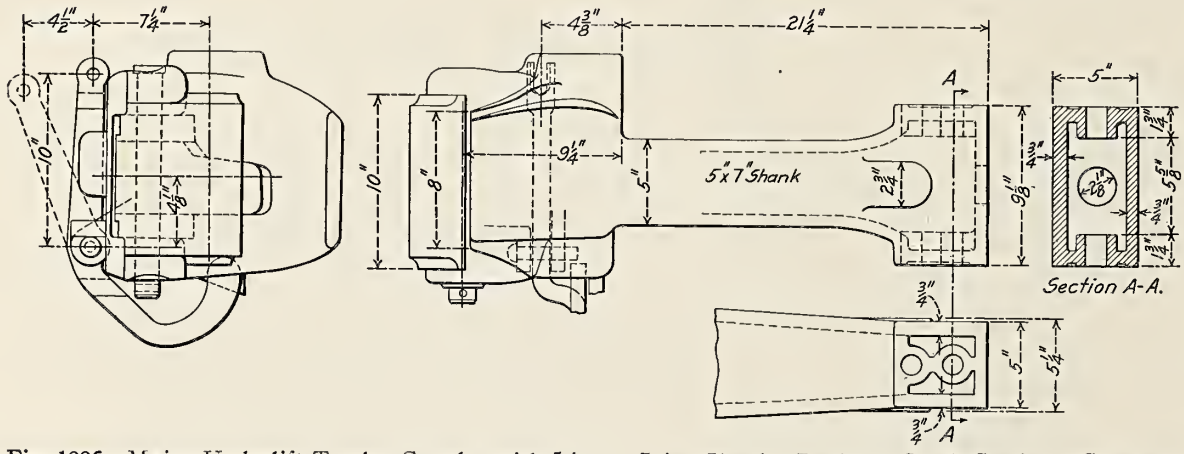

Fig. 1886—Major Underlift Tender Coupler with 5 in. x 7 in. Shank; Buckeye Steel Castings Company.

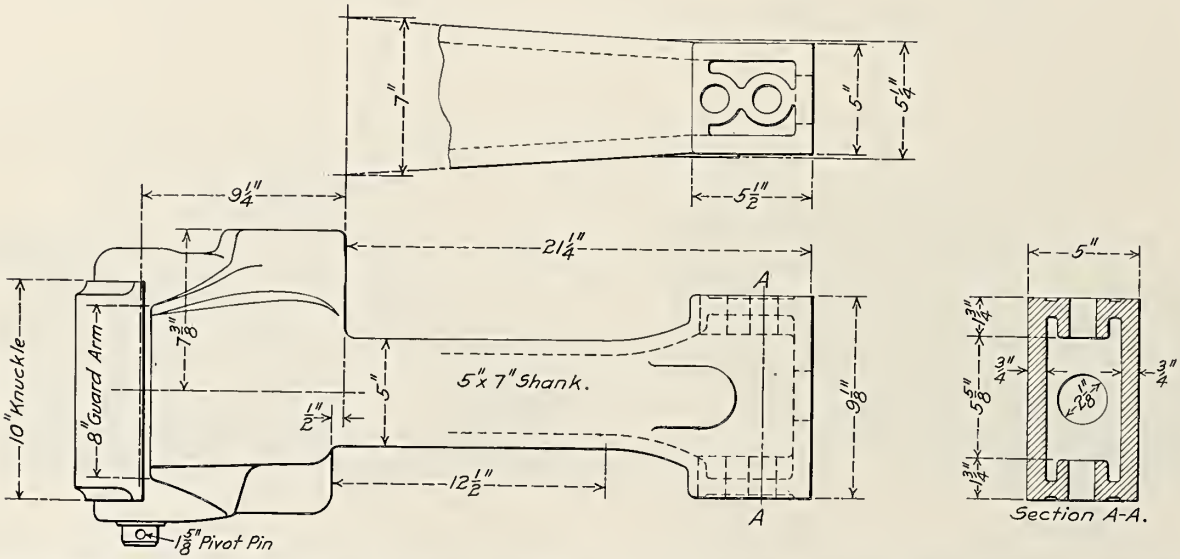

Fig. 1887—Major Toplift Tender Coupler with 5 in. x 7 in. Shank; Buckeye Steel Castings Company.

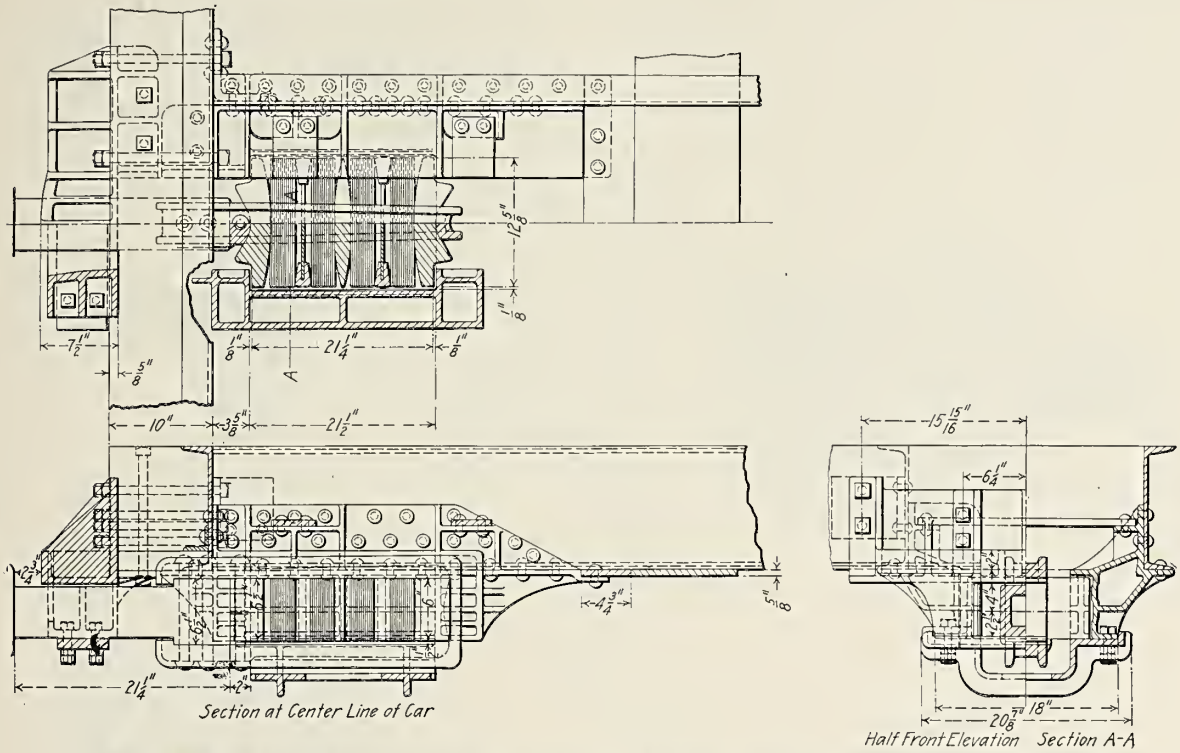

Fig. 1888—Waugh Draft Gear as Applied to Tenders; Waugh Draft Gear Company.

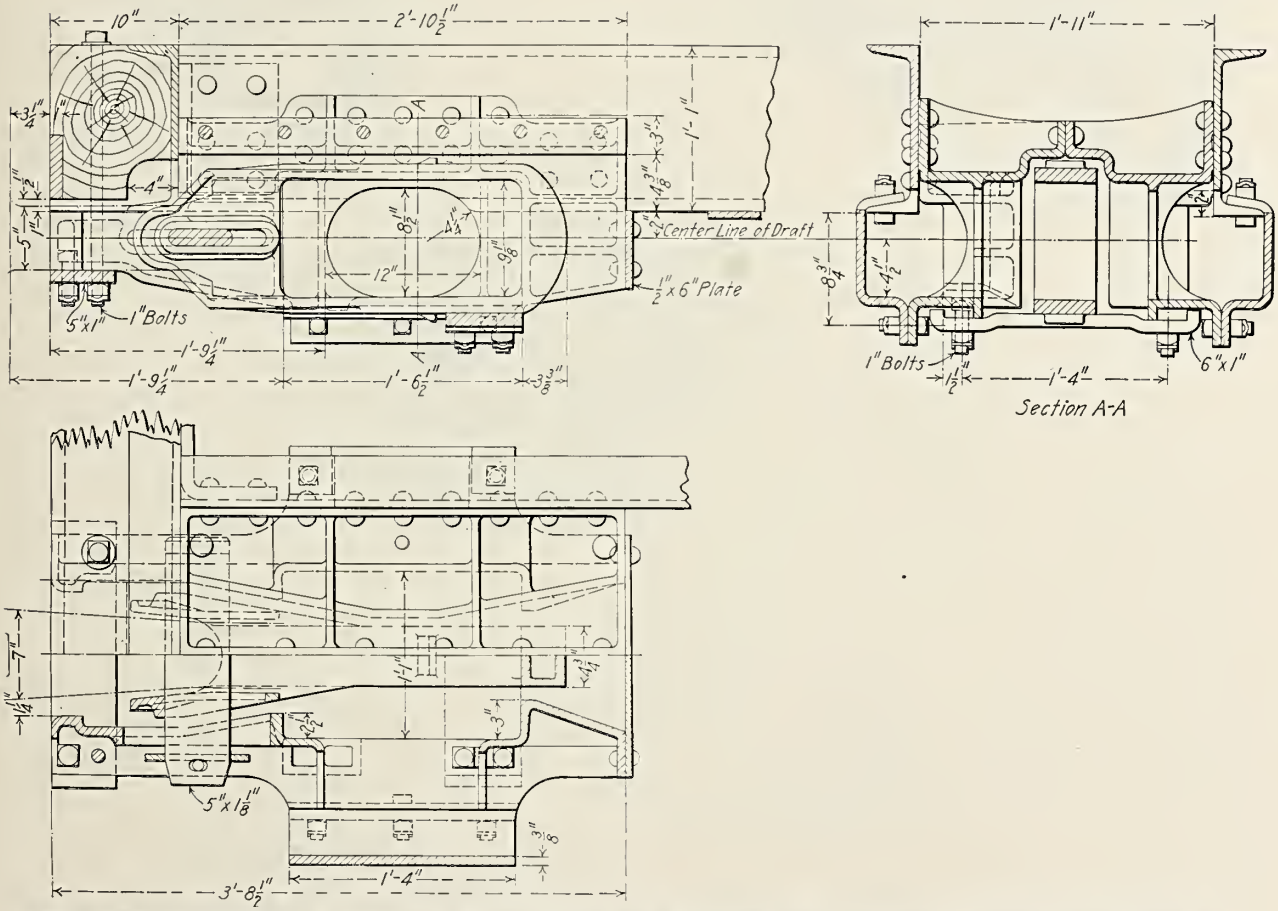

Fig. 1889—Application of Universal Keyed Yoke and Housing with Cardwell Friction Draft Gear to Duluth, Missabe & Northern Tenders; Universal Draft Gear Attachment Company.

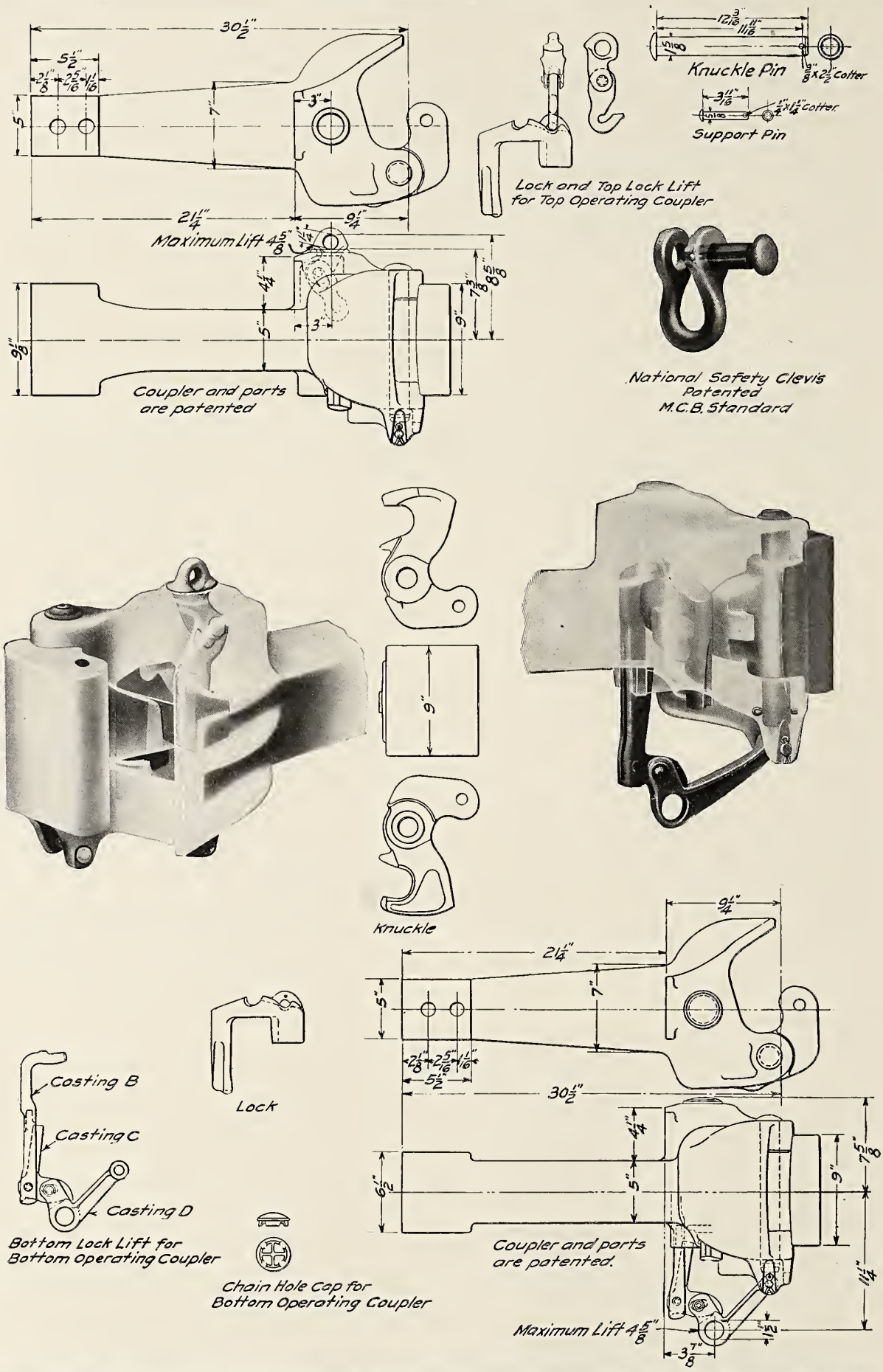

Fig. 1890—The Sharon Top and Bottom Operating Tender Coupler; The National Malleable Castings Company.

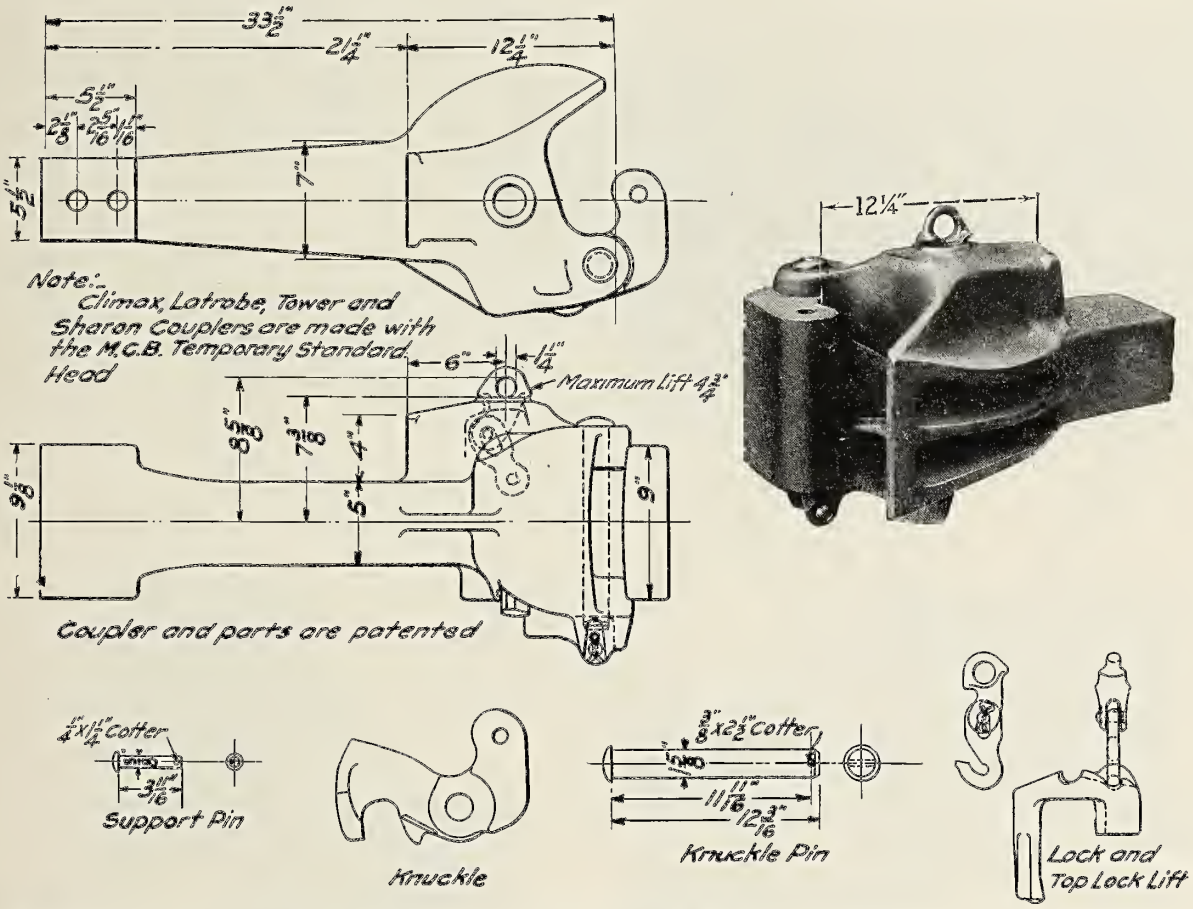

Fig. 1891—The Sharon M. C. B. Head, Temporary Standard; The National Malleable Castings Company.

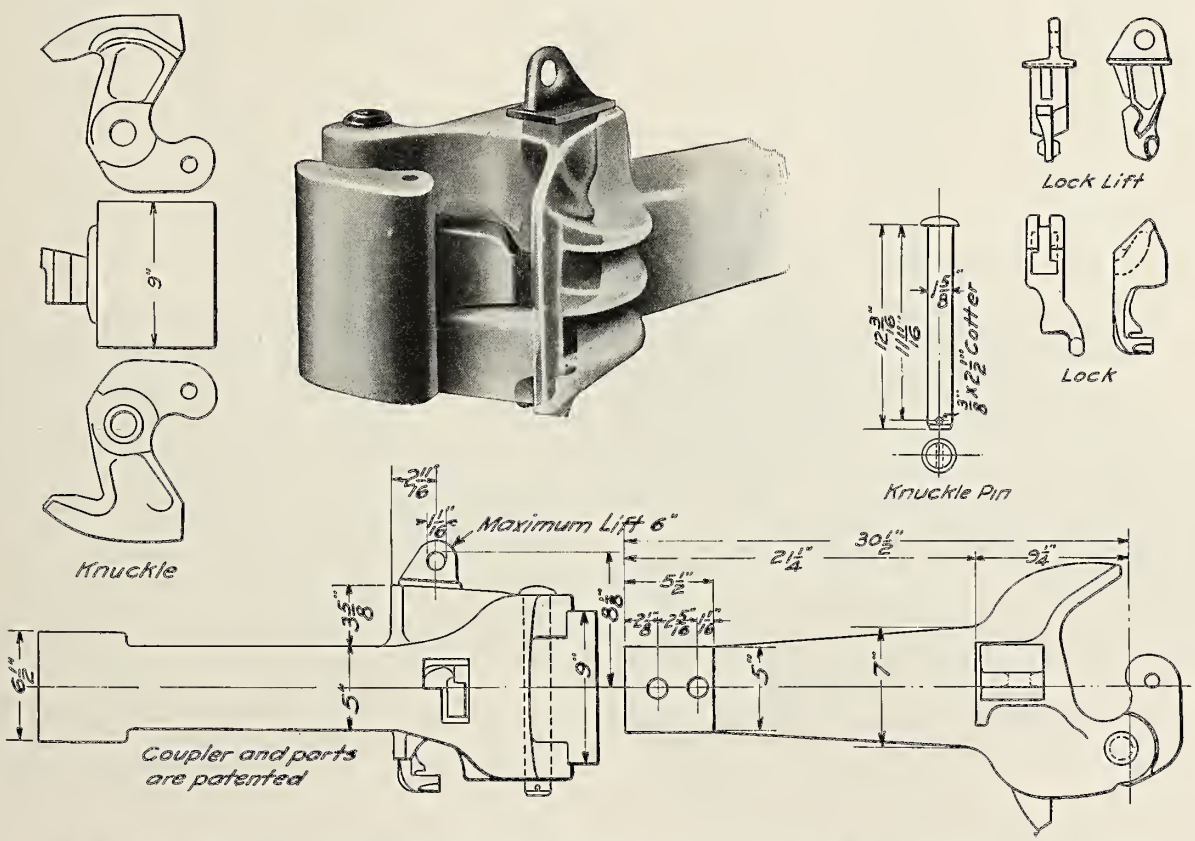

Fig. 1892—The Latrobe Tender Coupler and Parts; The National Malleable Castings Company.

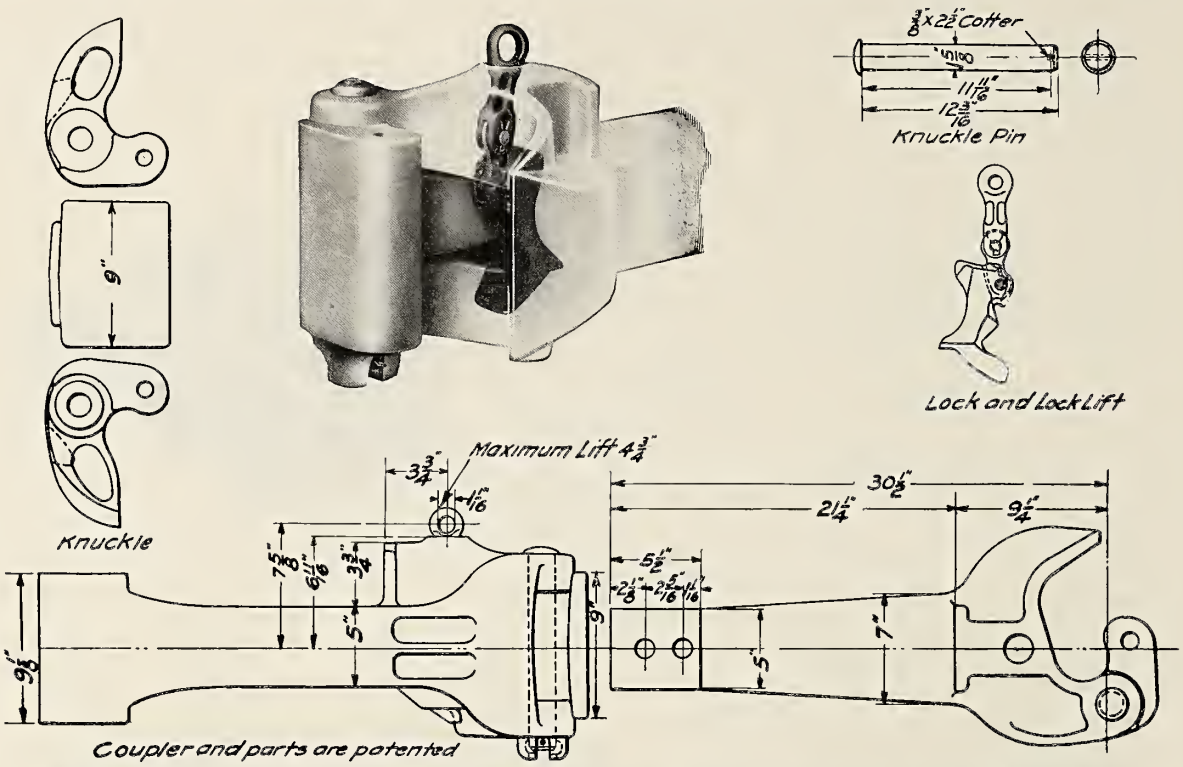

Fig. 1893—The Climax Tender Coupler and Parts; The National Malleable Castings Company.

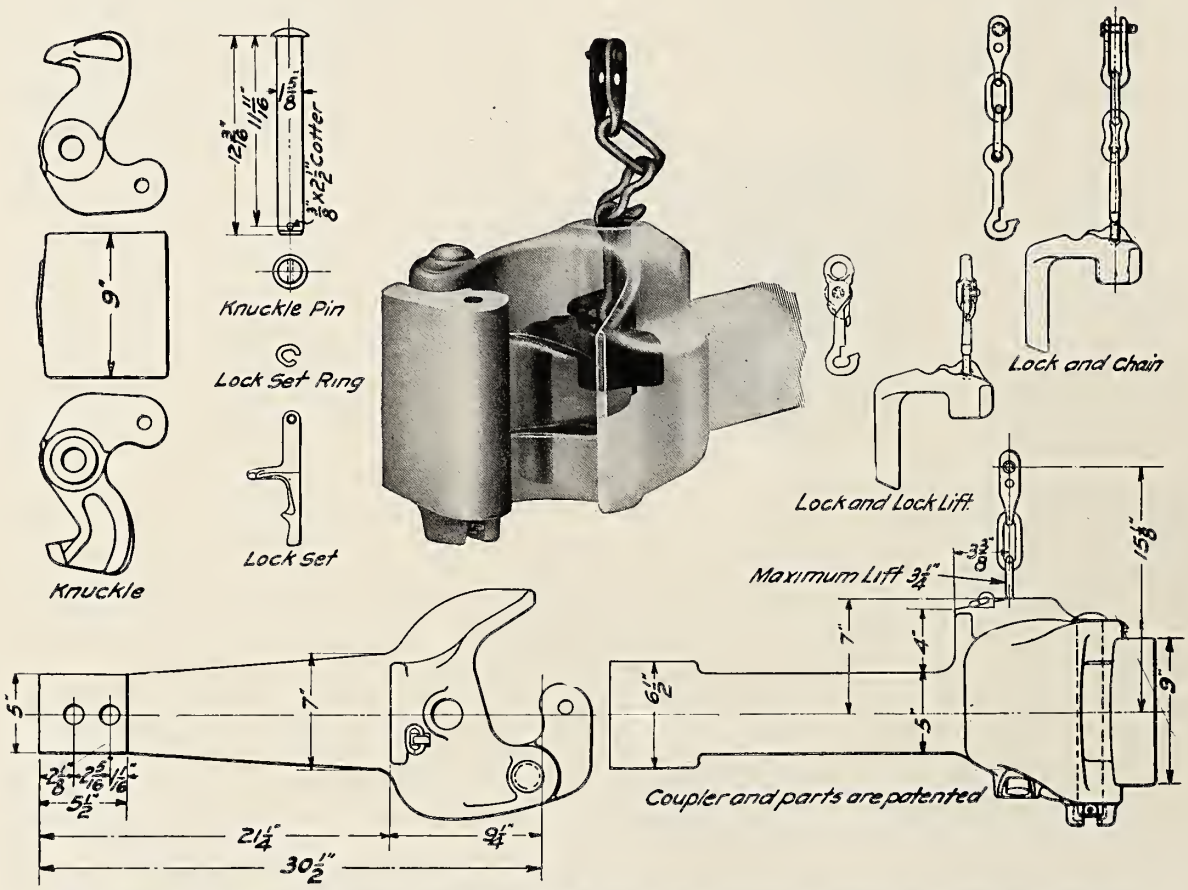

Fig. 1894—The Tower Tender Coupler and Parts; The National Malleable Castings Company.

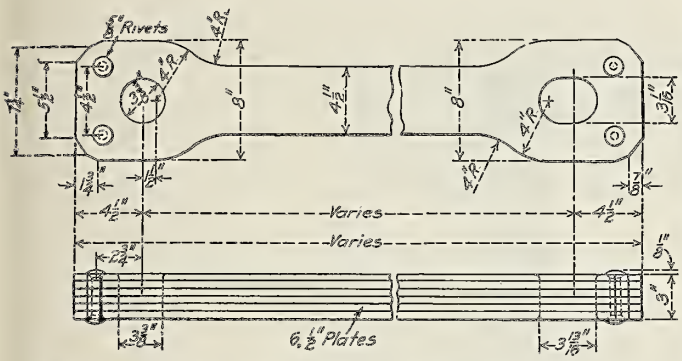

Fig. 1895—Drawbar Made of Steel Plates; Canadian Pacific.

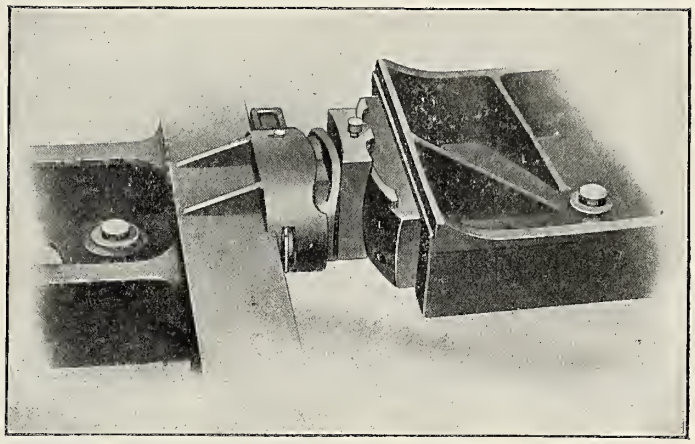

Fig. 1896—Radial Buffer Having Universal Movement; Economy Devices Corporation.

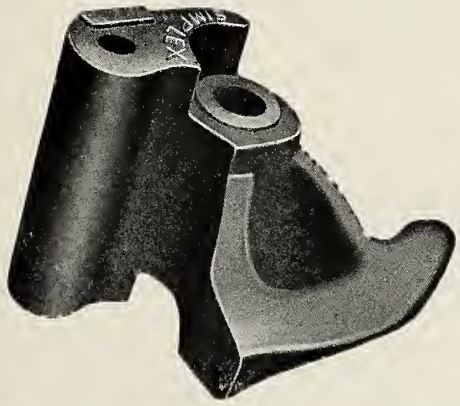

Fig. 1897—Knuckle of Simplex Coupler; American Steel Foundries.

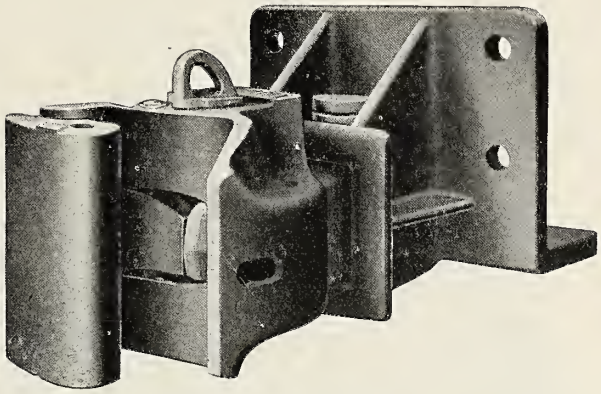

Fig. 1898—Simplex Tender Coupler; American Steel Foundries.

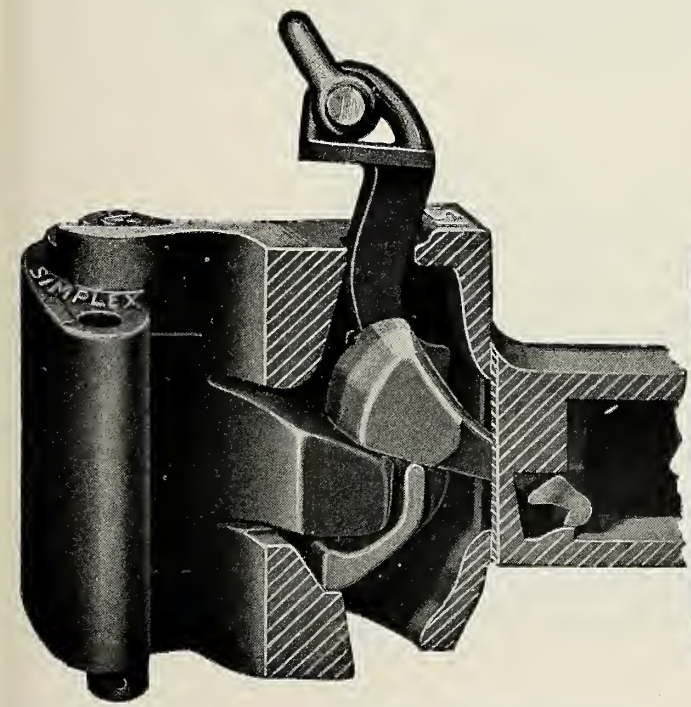

Fig. 1899—Simplex Coupler in Lock Set Position; American Steel Foundries.

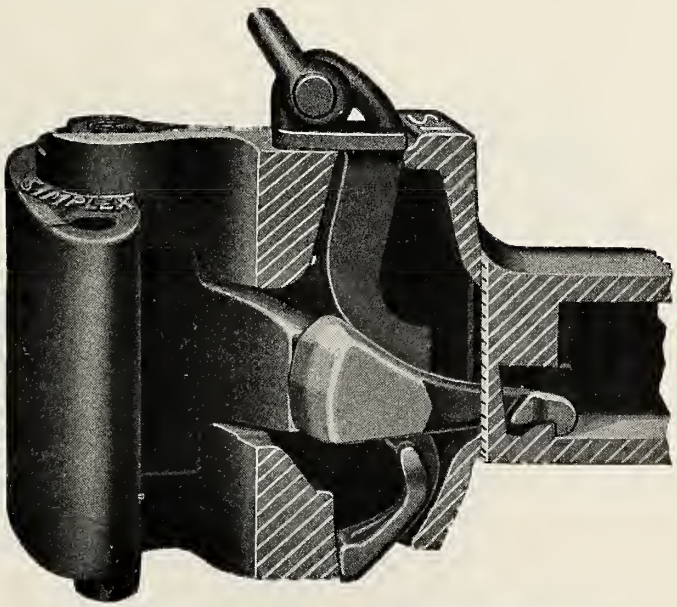

Fig. 1900—Simplex Coupler in Closed Position; American Steel Foundries.

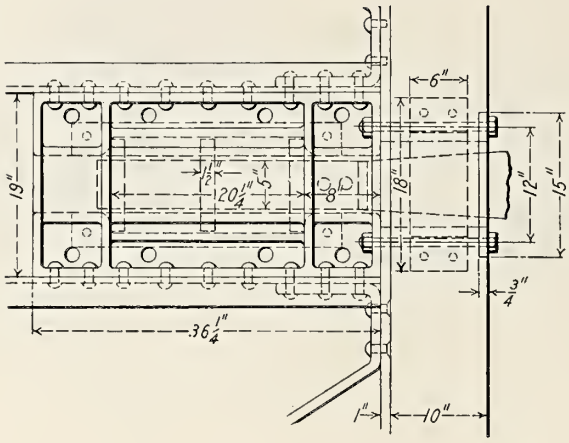

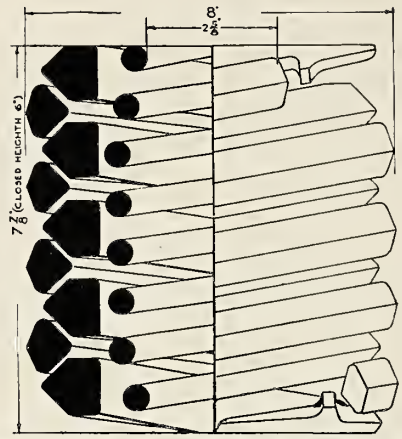

Fig. 1902—Harvey Friction Draft Spring, Size 8 in. x 8 in., with Centering Coil; Frost Railway Supply Company.

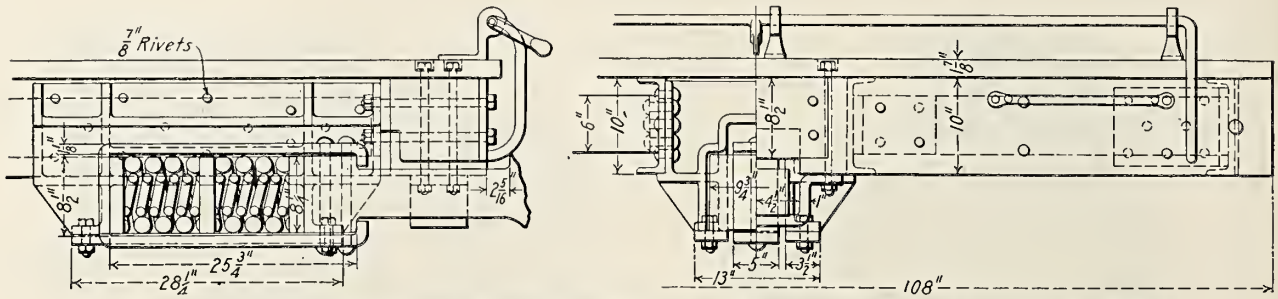

Fig. 1901—Application of Twin Spring Draft Gear to Tenders; Baldwin Locomotive Works.

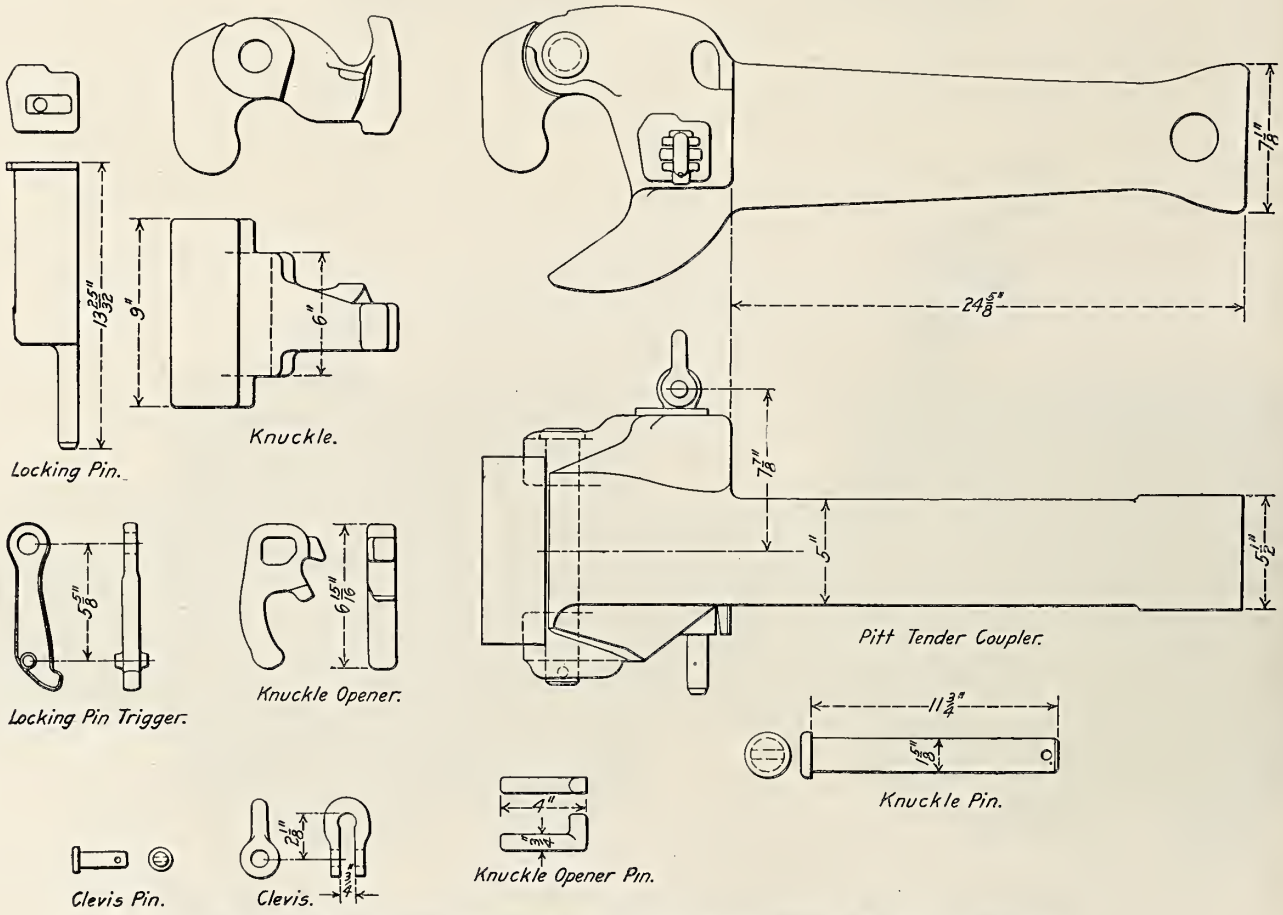

Fig. 1903—Pitt Tender Coupler, No. 5616; McConway & Torley Company.

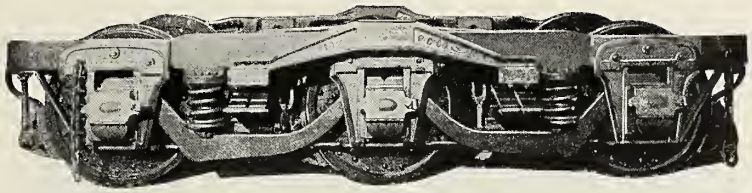

Fig. 1904—Commonwealth Six-Wheel Tender Truck. Truck Frame is in One Cast Steel Piece; Commonwealth Steel Company.

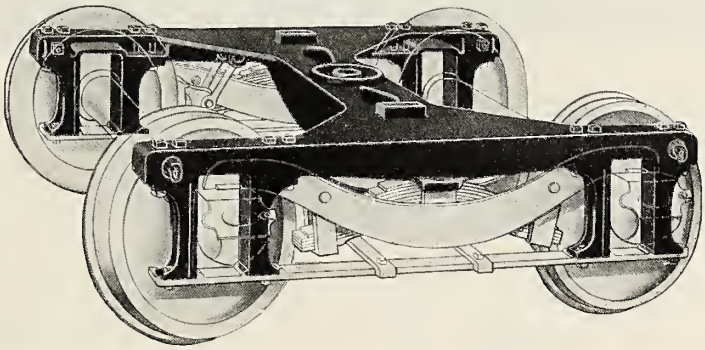

Fig. 1905—Adams Non-Derailing Tender Truck; Commonwealth Steel Company.

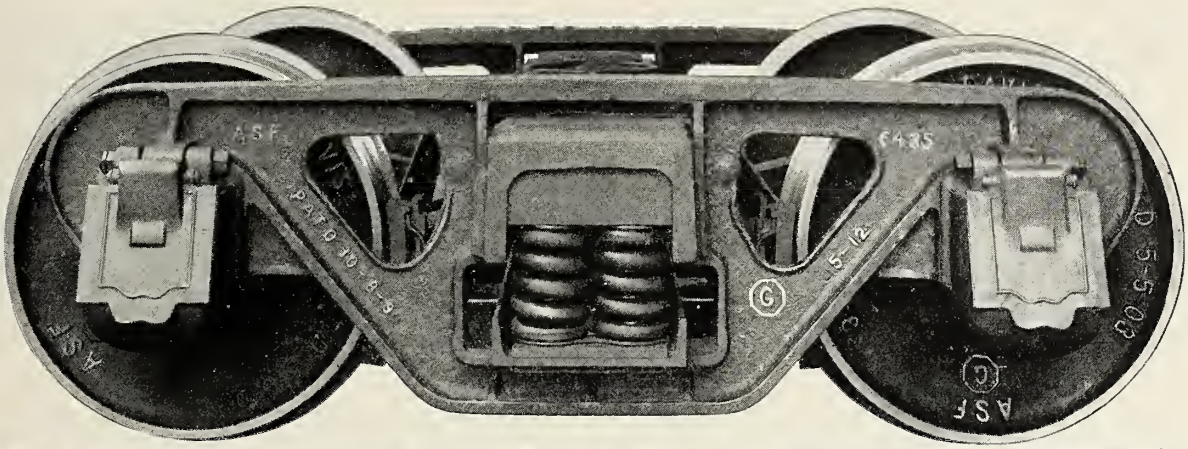

Fig. 1906—Tender Truck with Cast Steel Side Frames and Integral Pedestal Jaws; American Steel Foundries.

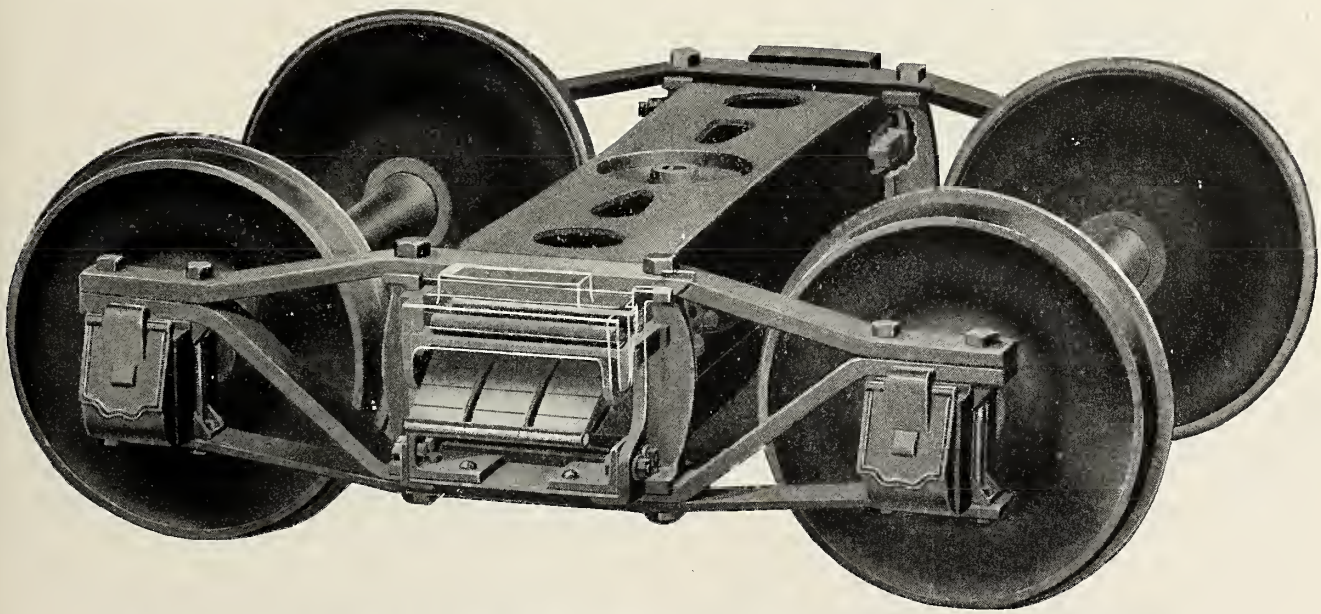

Fig. 1907—Barber Lateral Motion Roller Bearing Tender Truck; Standard Car Truck Company.

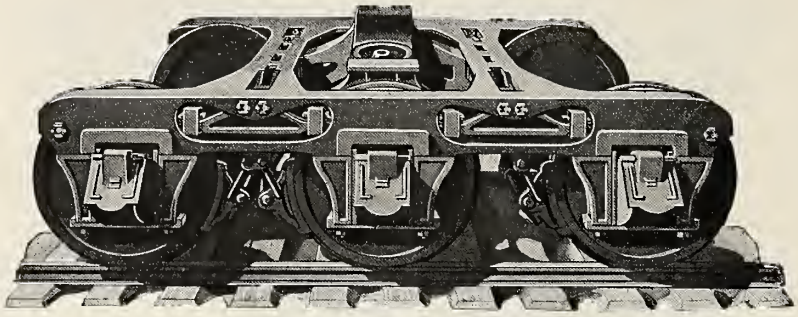

Fig. 1908—Short Wheel Base Six-Wheel Tender Truck; Commonwealth Steel Company.

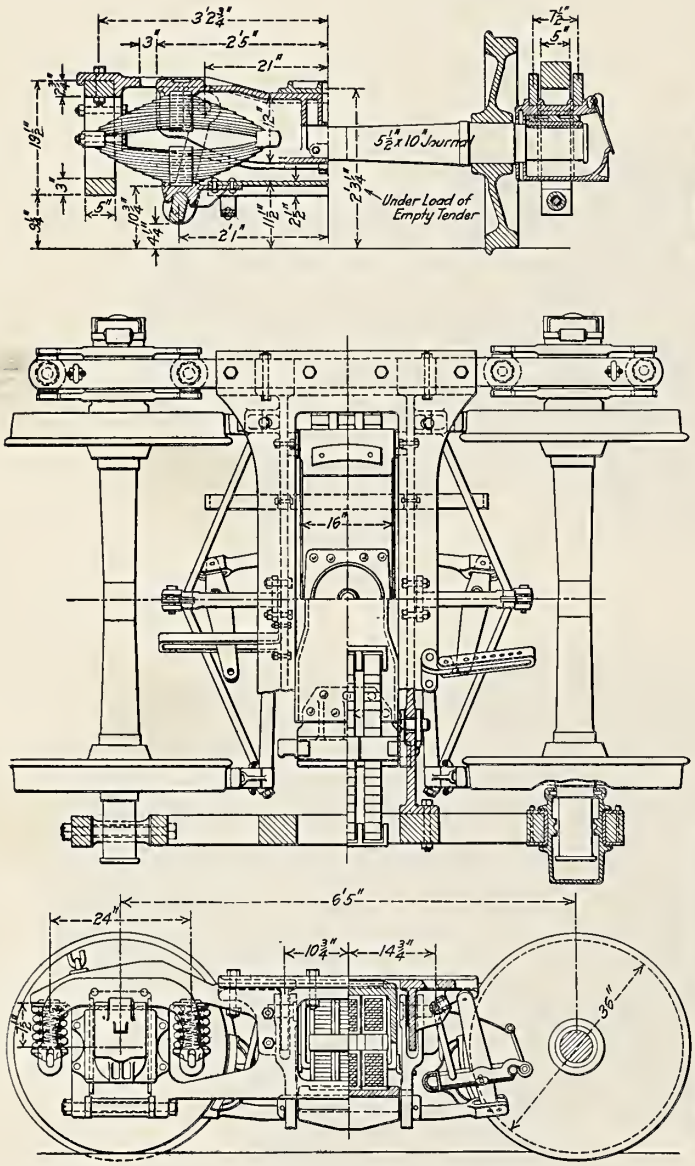

Fig. 1909—Tender Truck for Class E-6-S, Atlantic Type (4-4-2) Locomotive; Pennsylvania Railroad.

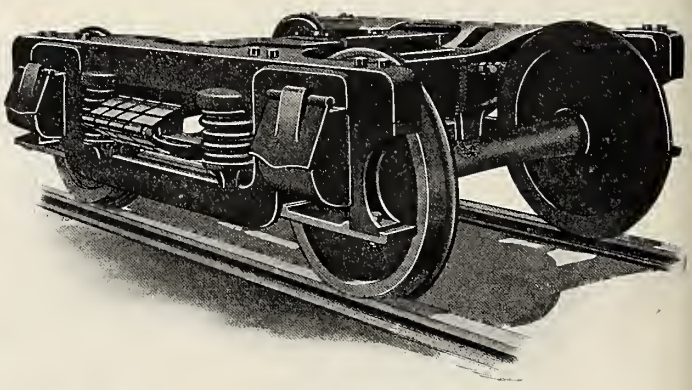

Fig. 1910—Equalizing Swing Motion Tender Truck; Commonwealth Steel Company.

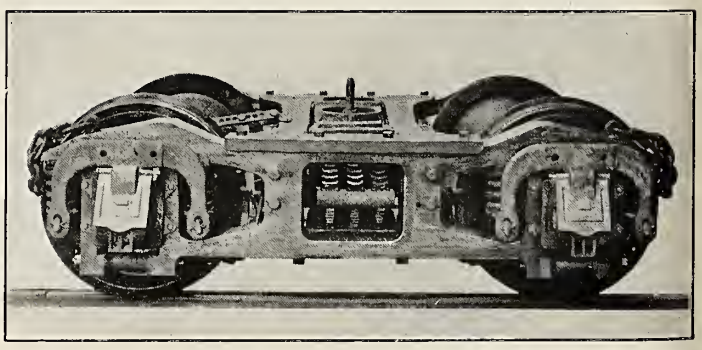

Fig. 1911—Tender Truck for Class E-6-S, Atlantic Type (4-4-2) Locomotive; Pennsylvania Railroad.

Names of Parts of Tender Trucks, Figs. 1913-1920.

1 *Upper Arch Bar*
2 *Lower Arch Bar*
2a *Pedestal*
2b *Pedestal Cross Tie*
3 *Pedestal Tie Bar*
4 *Bolster*
4a *Bolster Spring*
4c *Bolster Spring Cap*
4d *Bolster Spring Seat*
4f *Roller Seat*
5 *Column*
6 *Column Bolt*
7 *Journal Box*
8 *Journal Box Bolt*
9 *Brake Shoe*
10 *Brake Head*
11 *Brake Hanger*
11a *Brake Hanger Pin*
12 *Brake Hanger Bracket*
13 *Live Brake Lever*
13a *Dead Brake Lever*
13b *Brake Lever Fulcrum Pin*
14 *Brake Lever Connecting Rod*
15 *Brake Lever Guide*
15b *Brake Lever Guide Bracket Pin*
16 *Brake Beam*
17 *Brake Beam Adjusting Hanger*
18 *Brake Beam Adjusting Hanger Carrier*
18a *Brake Beam Safety Chain*
18b *Brake Beam Safety Chain Eye*
19 *Center Plate*
20 *Spring Plank*
20a *Spring Hanger*
21 *Check Chain Eye*
21a *Check Chain*
22 *Side Bearing*
23 *Equalizer*
27 *Frame*
29 *Transom*
29a *Spring*
31 *Column Guide*
32 *Column Guide Bolt*

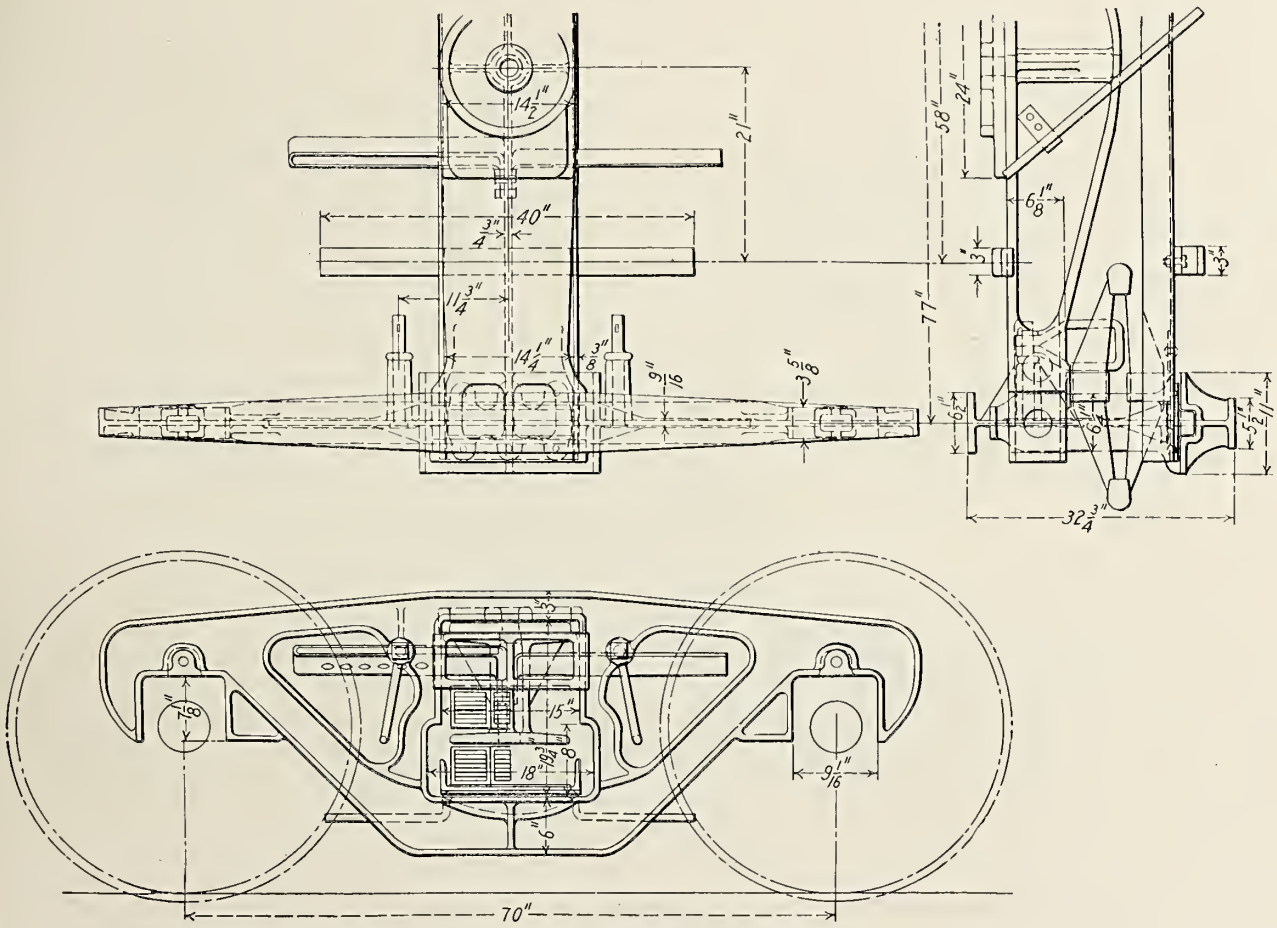

Fig. 1912—Tender Truck for 8,500 Gal. Tenders; Baldwin Locomotive Works.

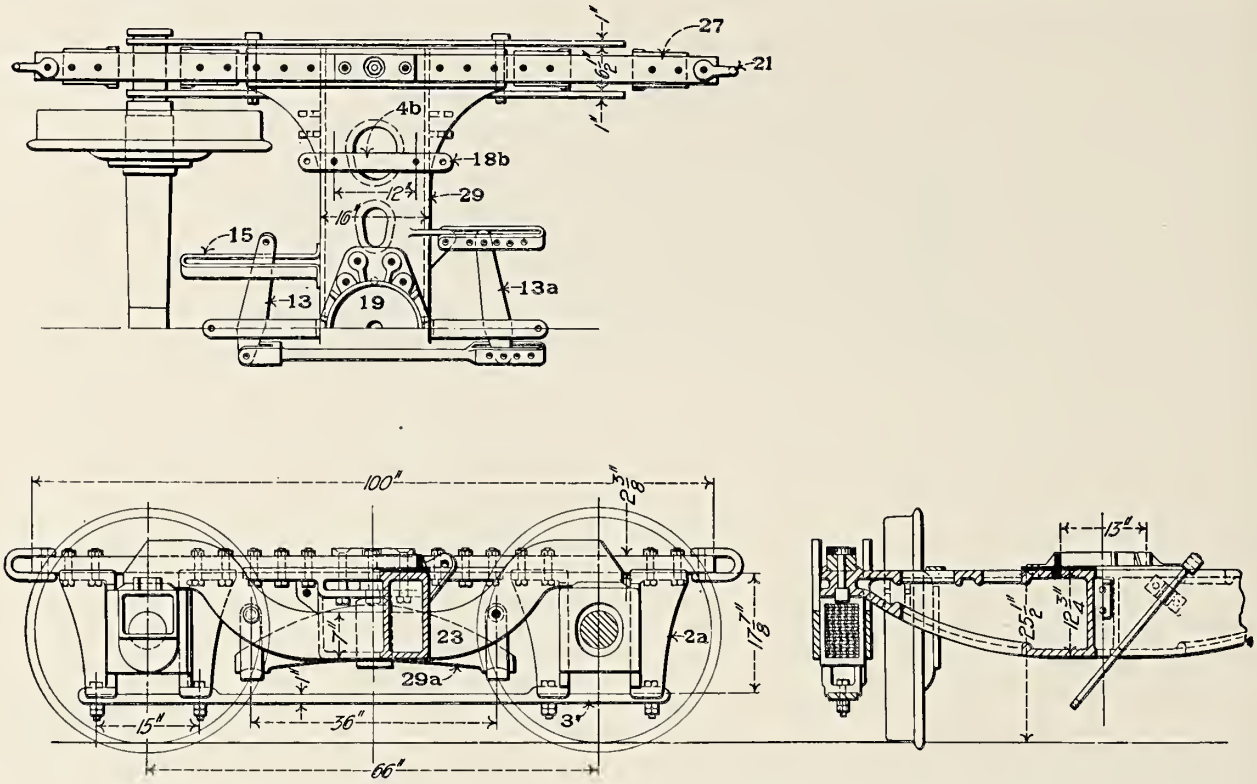

Fig. 1913—Equalized Pedestal Tender Truck; American Locomotive Company.

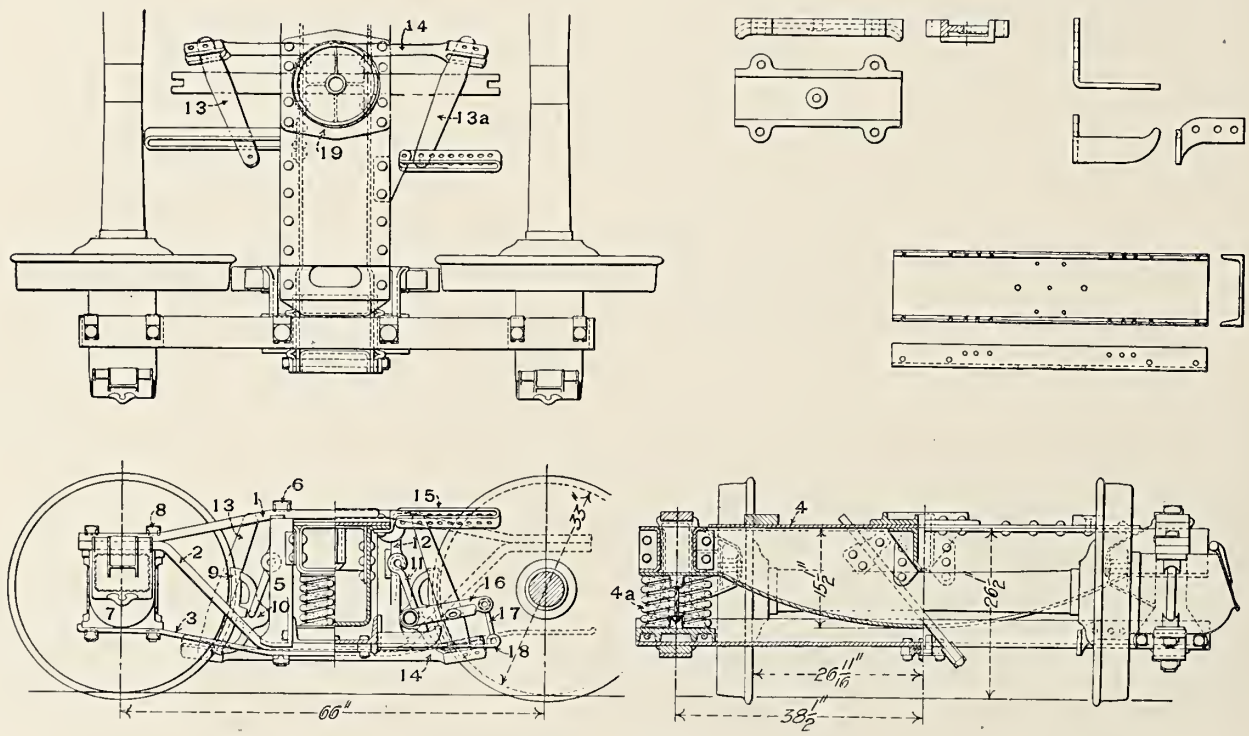

Fig. 1914—Diamond Arch Bar Tender Truck with Pressed Steel Bolster.

Numbers Refer to Names of Parts on Page 699.

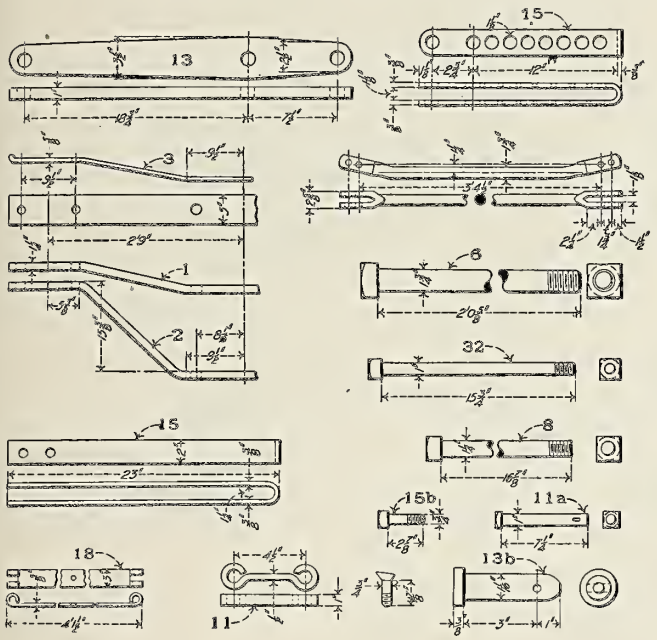

Fig. 1915—Wrought Iron Details of Diamond Arch Bar Tender Truck, Shown in Fig. 1914.

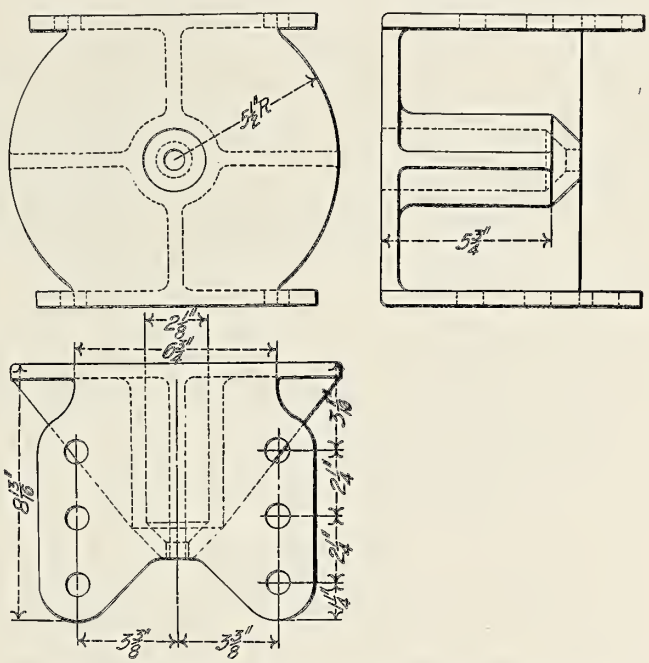

Fig. 1916—Cast Steel Center Plate Support for Pressed Steel Bolster Shown in Fig. 1914.

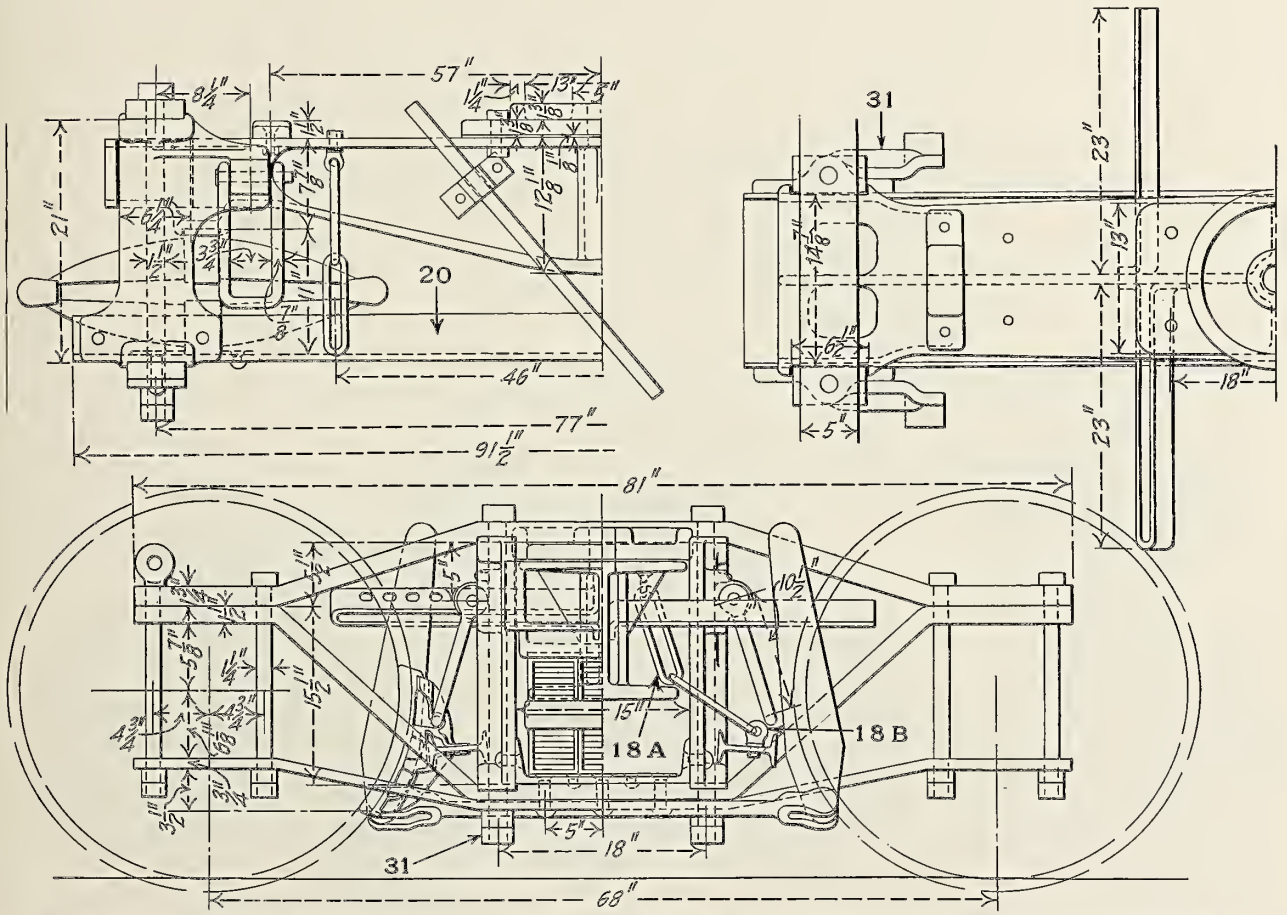

Fig. 1917—Diamond Arch Bar Tender Truck. Built for the Ray Consolidated Copper Company by the Baldwin Locomotive Works.

Numbers Refer to Names of Parts on Page 699.

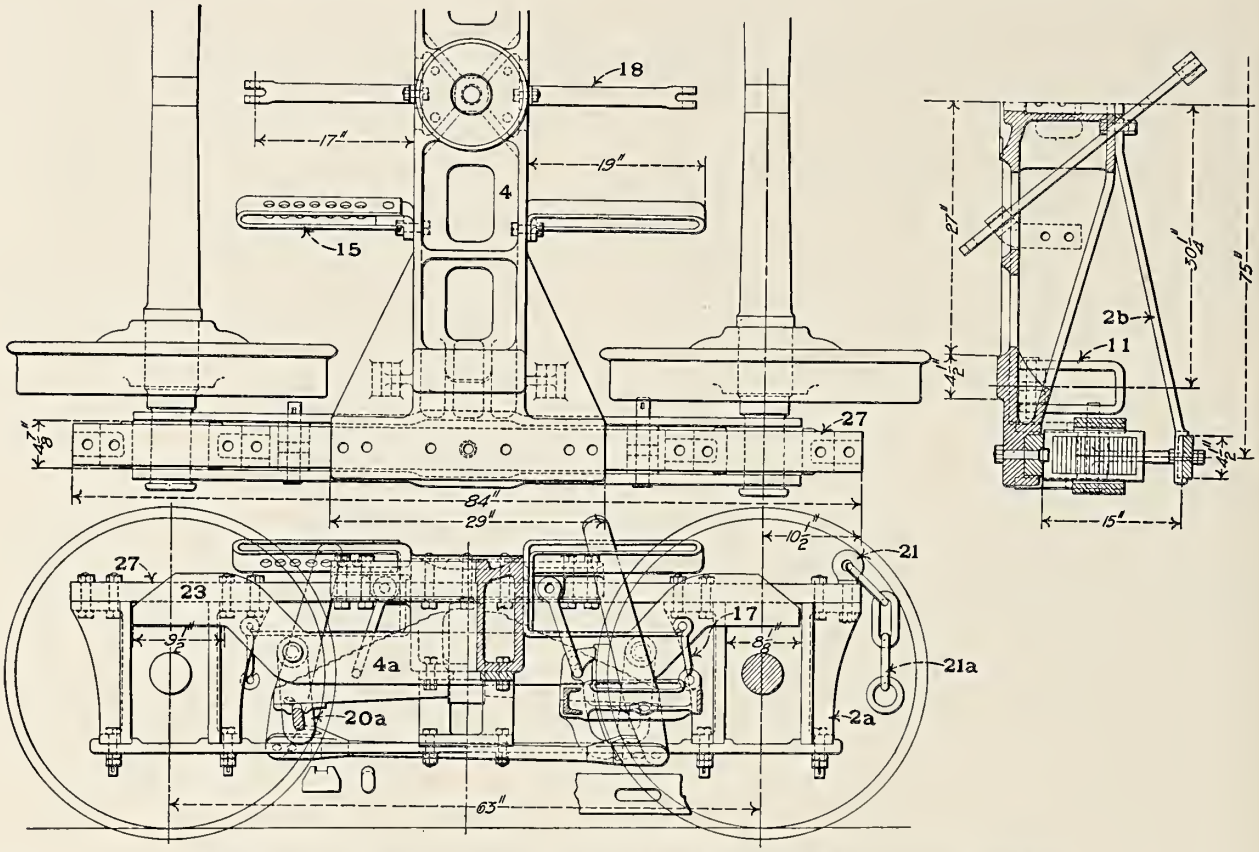

Fig. 1918—Equalized Pedestal Tender Truck; Baldwin Locomotive Works.

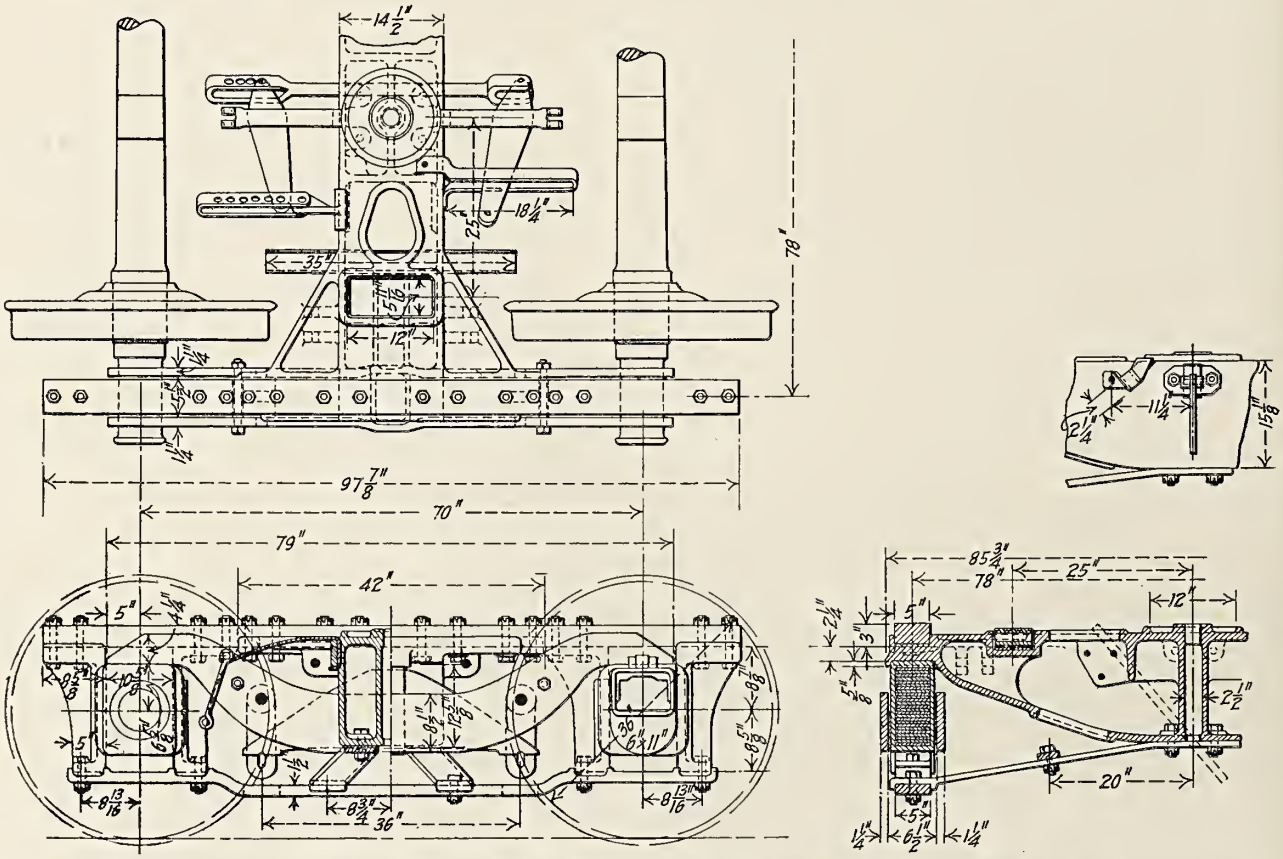

Fig. 1919—Equalized Pedestal Tender Truck. Built for the Kansas City Southern by the American Locomotive Company.

Numbers Refer to Names of Parts on Page 699.

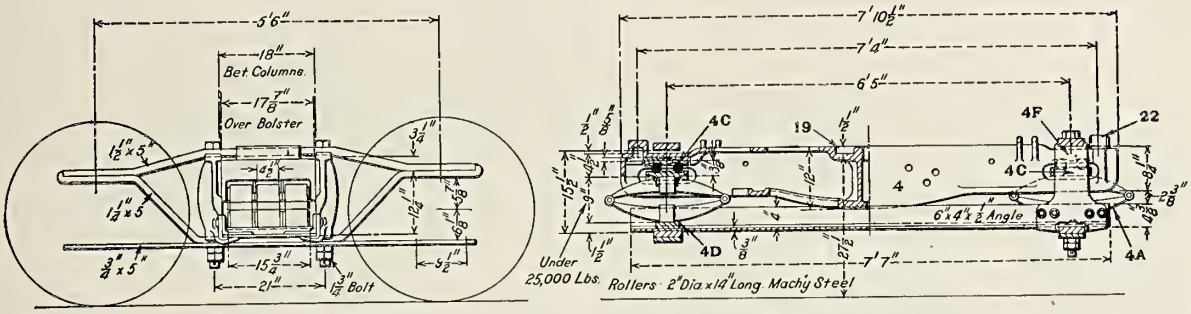

Fig. 1920—Barber Type Tender Truck; Standard Car Truck Company.

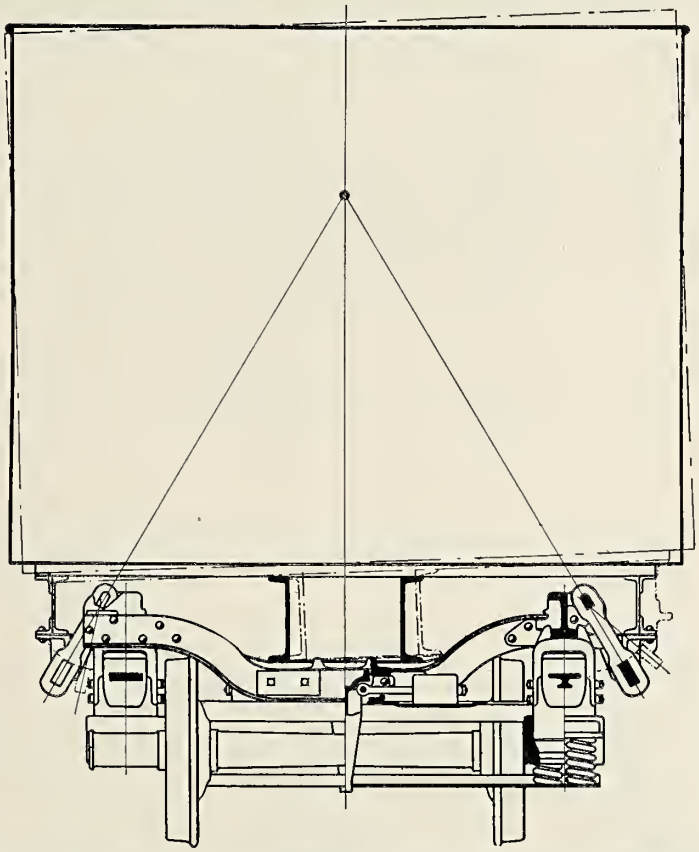

Fig. 1921—Summers Balanced Side Bearing Truck Applied to a Tender; Summers Steel Car Company.

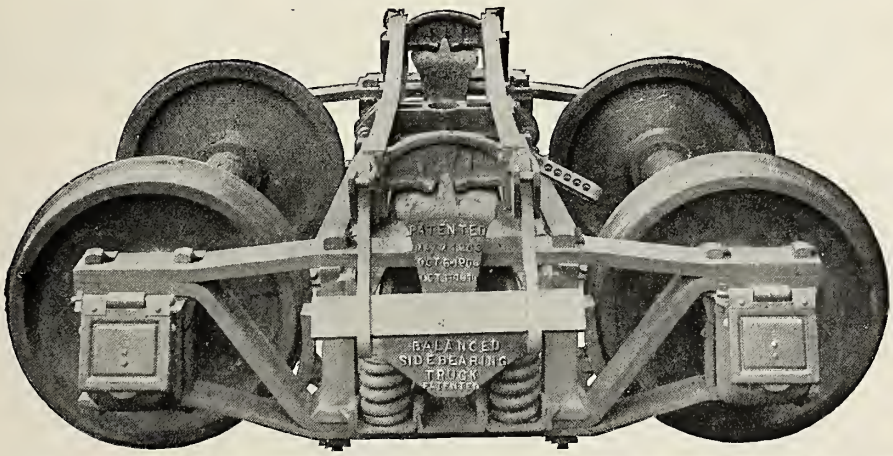

Fig. 1922—Summers Balanced Side Bearing Truck; Summers Steel Car Company.

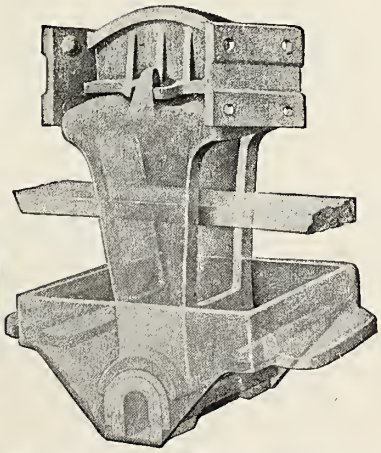

Fig. 1923—Rocker Side Bearing for Summers Truck; Summers Steel Car Company.

Numbers Refer to Names of Parts on Page 699.

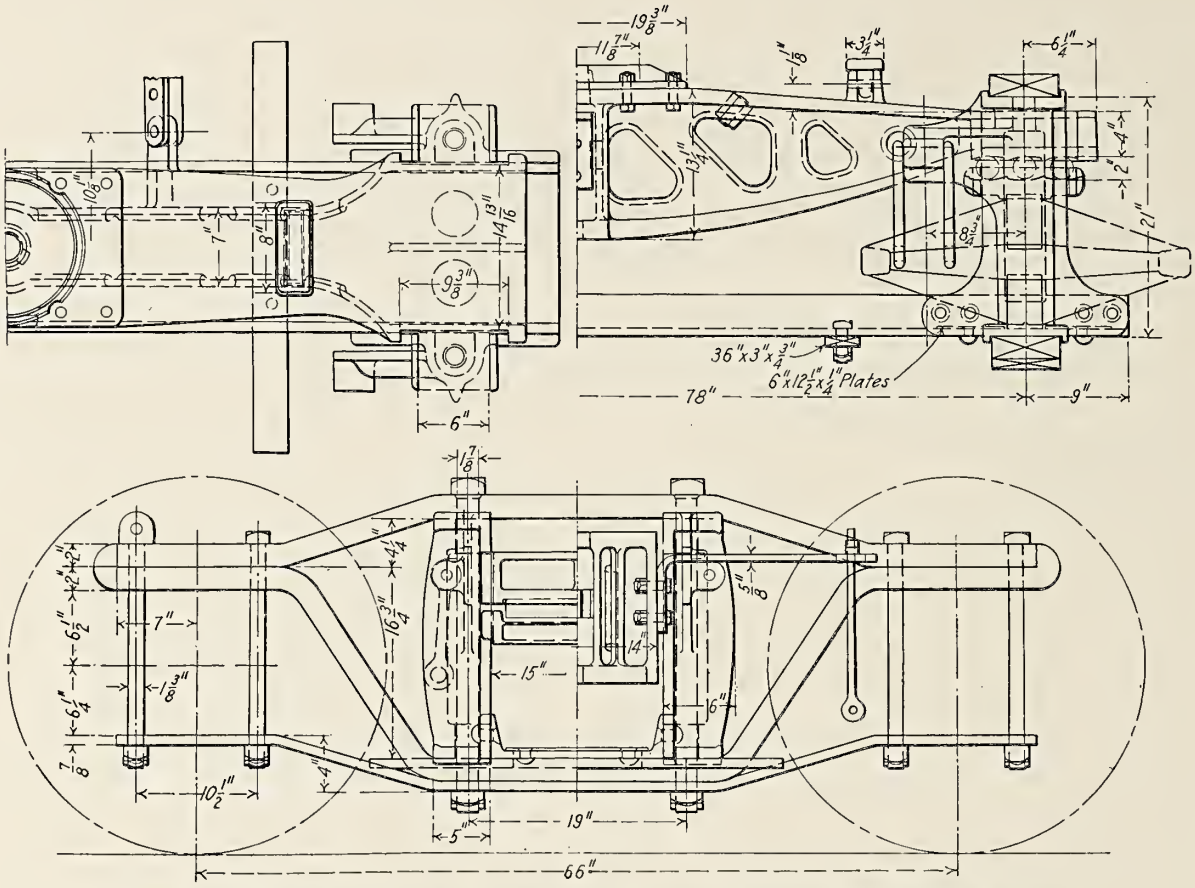

Fig. 1924—Tender Truck for 8,000 Gallon Tenders; Baldwin Locomotive Works.

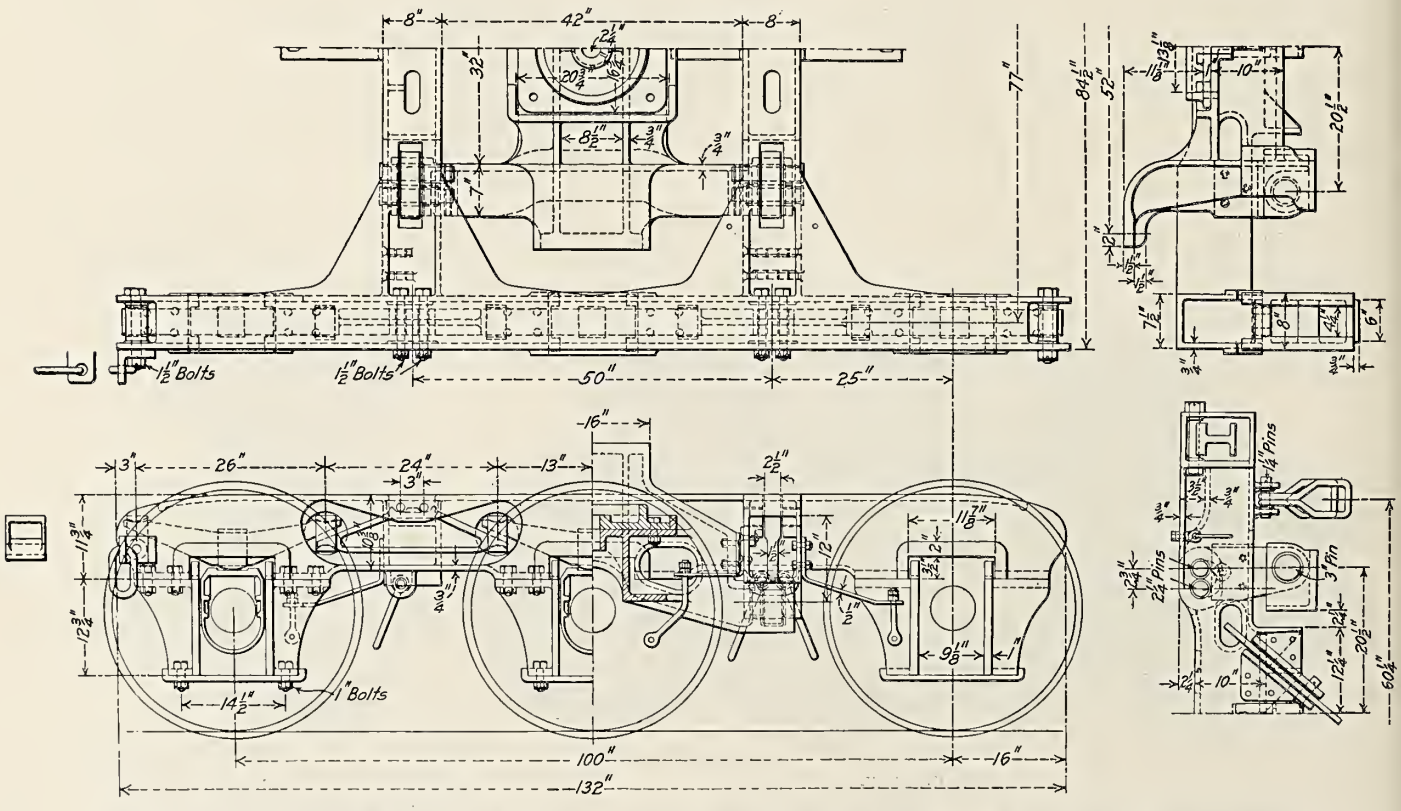

Fig. 1925—Six-wheel Equalized Tender Truck of 9,000 Gallon Tender for Pacific Type Locomotive; Atchison, Topeka & Santa Fe.

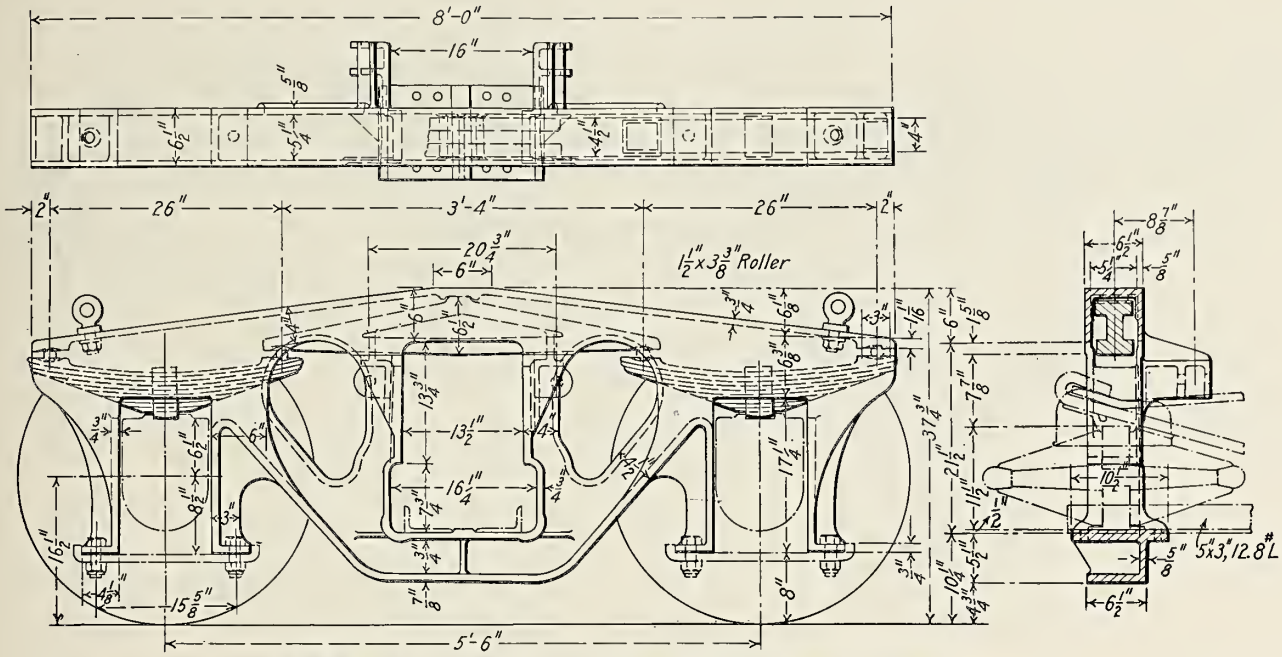

Fig. 1926—Equalized Tender Truck; Scullin Steel Company.

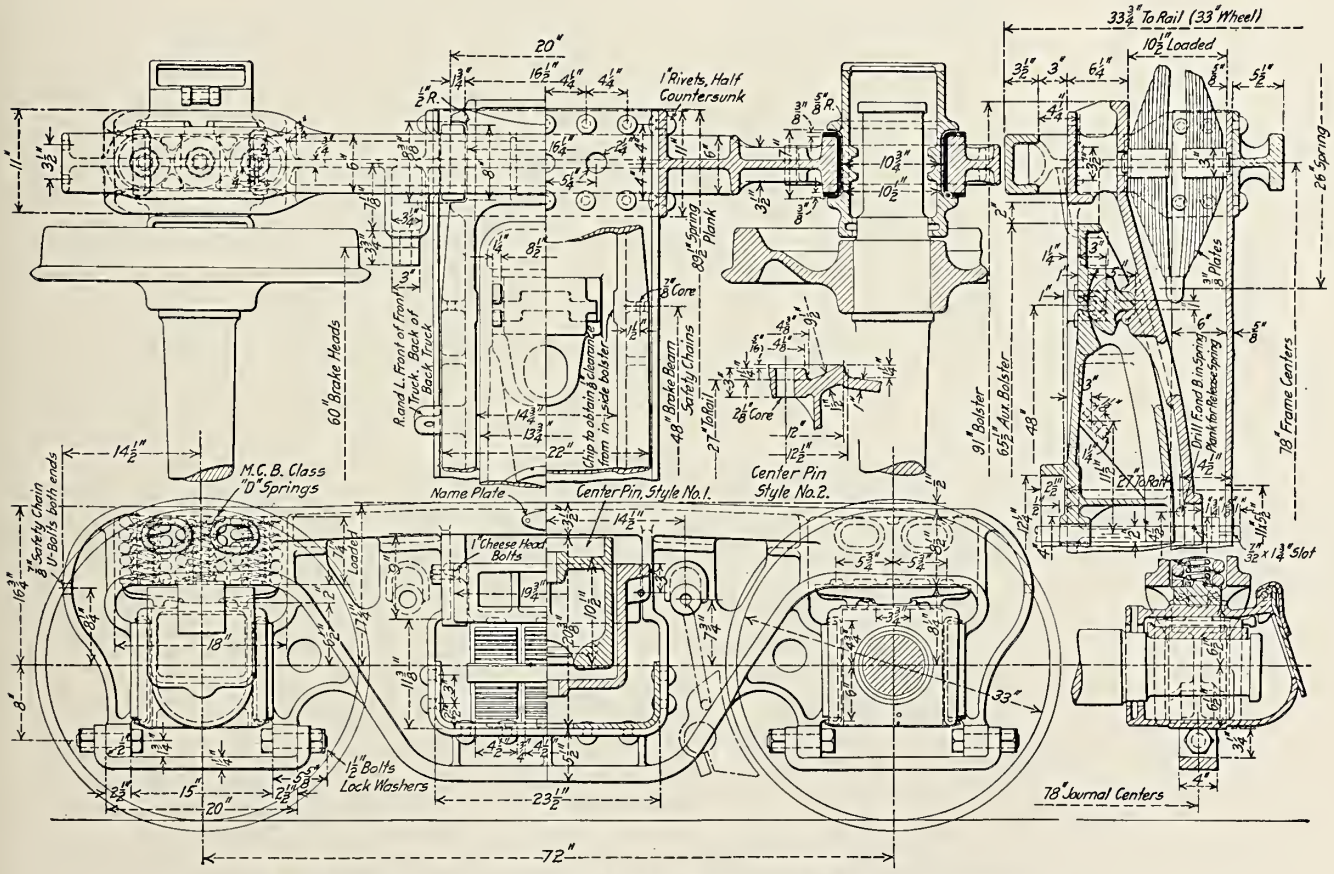

Fig. 1927—Economy Tender Truck; Economy Devices Corporation.

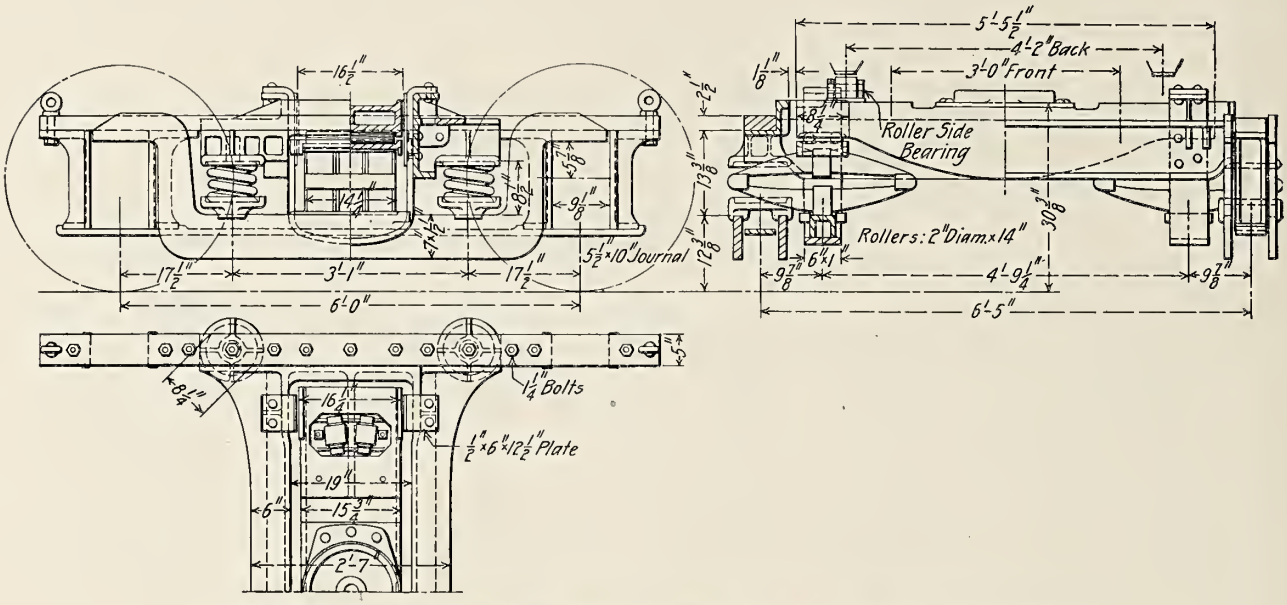

Fig. 1928—Barber Equalized Tender Truck; Standard Car Truck Company.

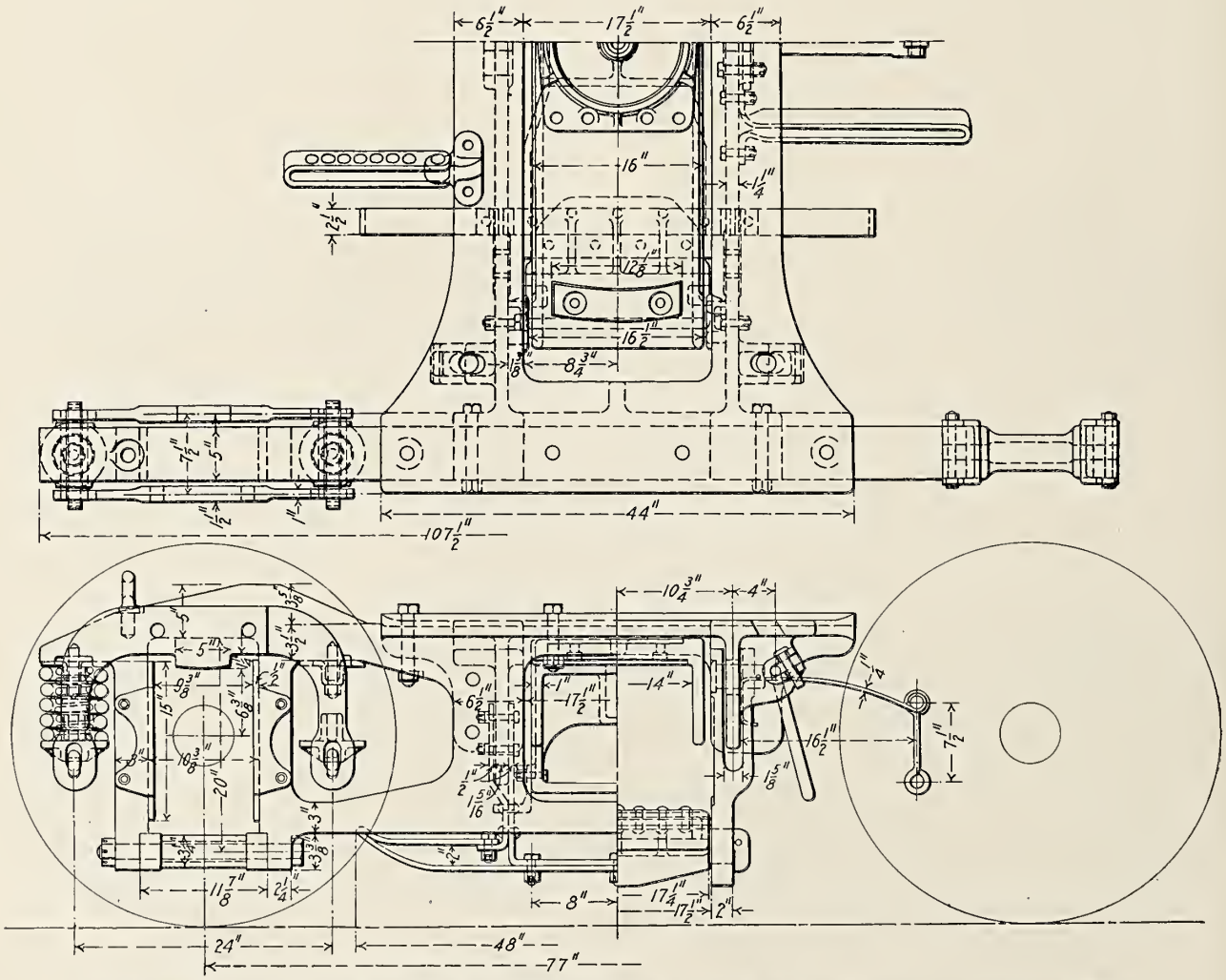

Fig. 1929—Tender Truck Built for the Pennsylvania Railroad by the Baldwin Locomotive Works.

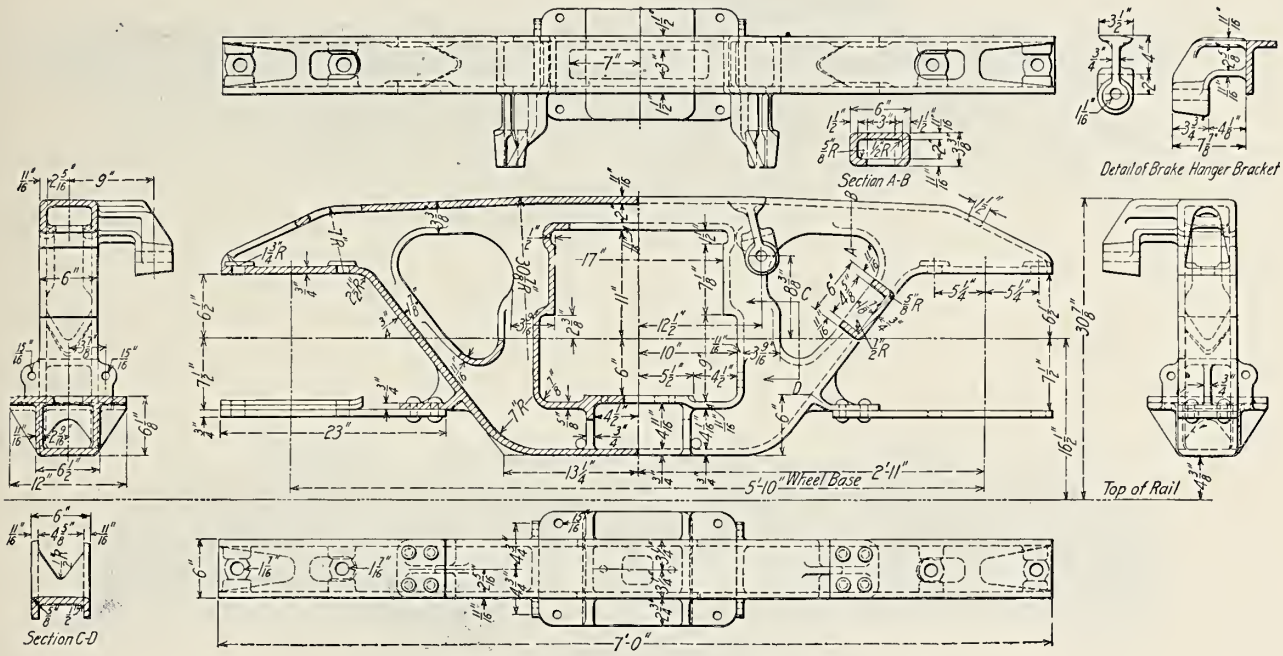

Fig. 1930—Truck Side Frame; Pennsylvania Railroad.

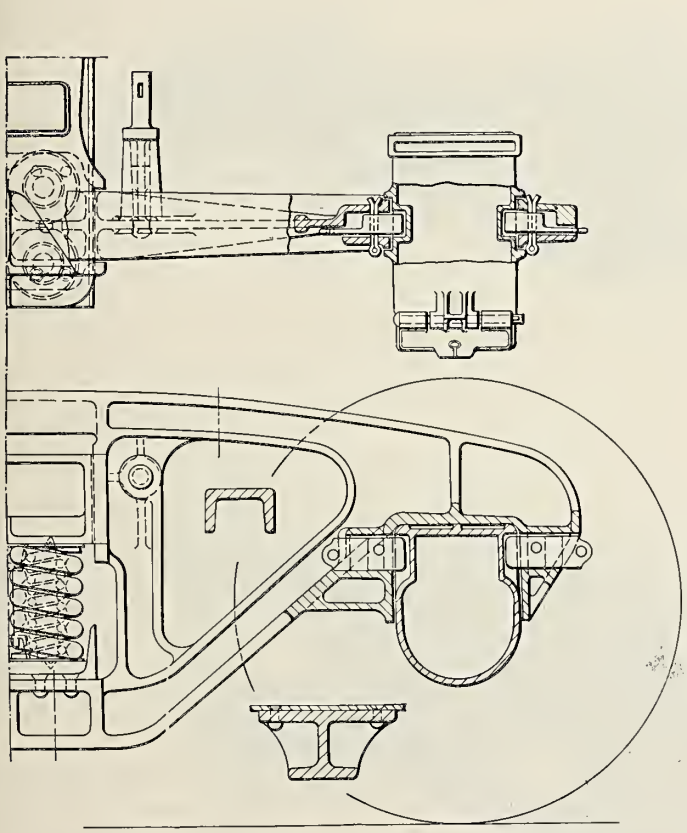

Fig. 1931—Pedestal Type Truck Frame; Gould Coupler Company.

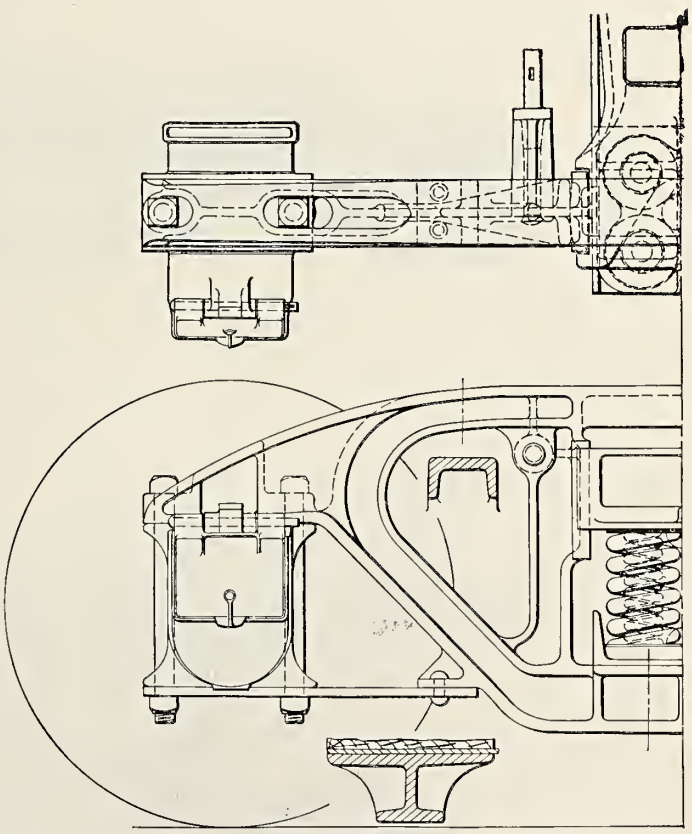

Fig. 1932—Gould Type Truck Frame; Gould Coupler Company.

Fig. 1933—Simplex Body Bolster with Plate Web; American Steel Foundries.

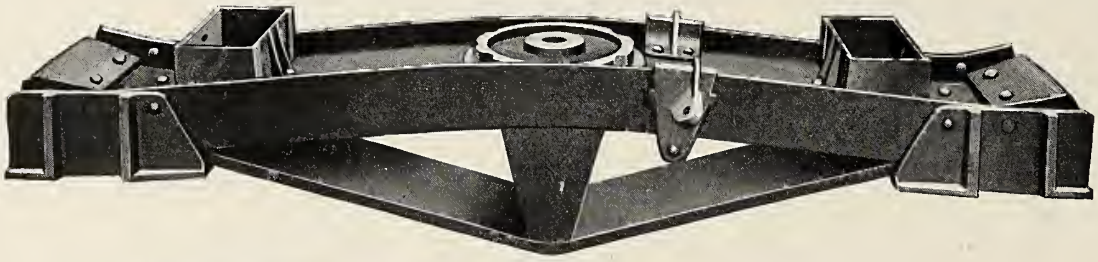

Fig. 1934—Sampson Tender Truck Bolster; American Steel Foundries.

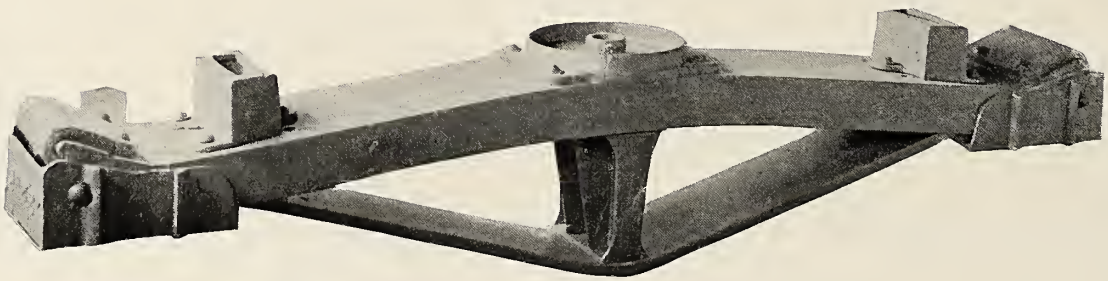

Fig. 1935—Simplex Tender Truck Bolster; American Steel Foundries.

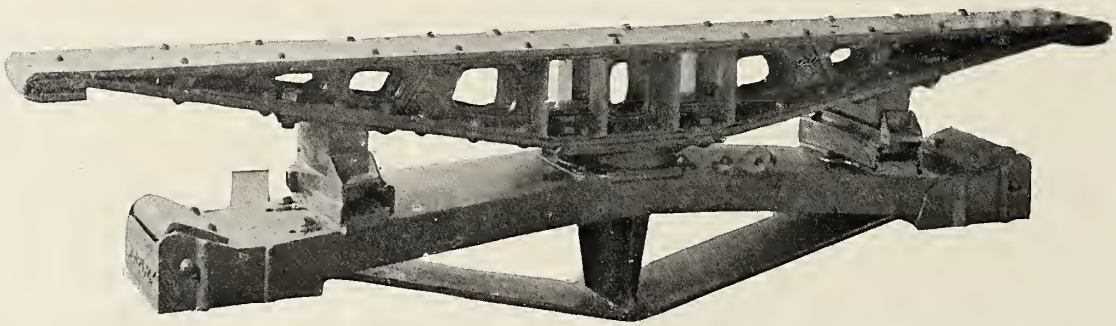

Fig. 1936—Simplex Body and Truck Bolsters with Susemihl Side Bearings; American Steel Foundries.

Fig. 1937—I Shape Bolster; American Steel Foundries.

Fig. 1938—T Shape Bolster; American Steel Foundries.

Fig. 1939—Box Shape Bolster; American Steel Foundries.

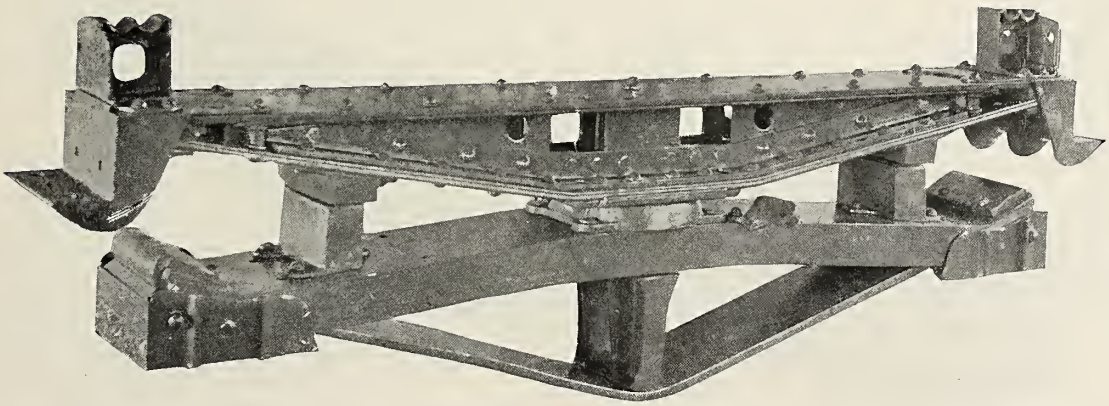

Fig. 1940—Simplex Body and Truck Bolster with Solid Side Bearings; American Steel Foundries.

Fig. 1941—U Shape Bolster; American Steel Foundries.

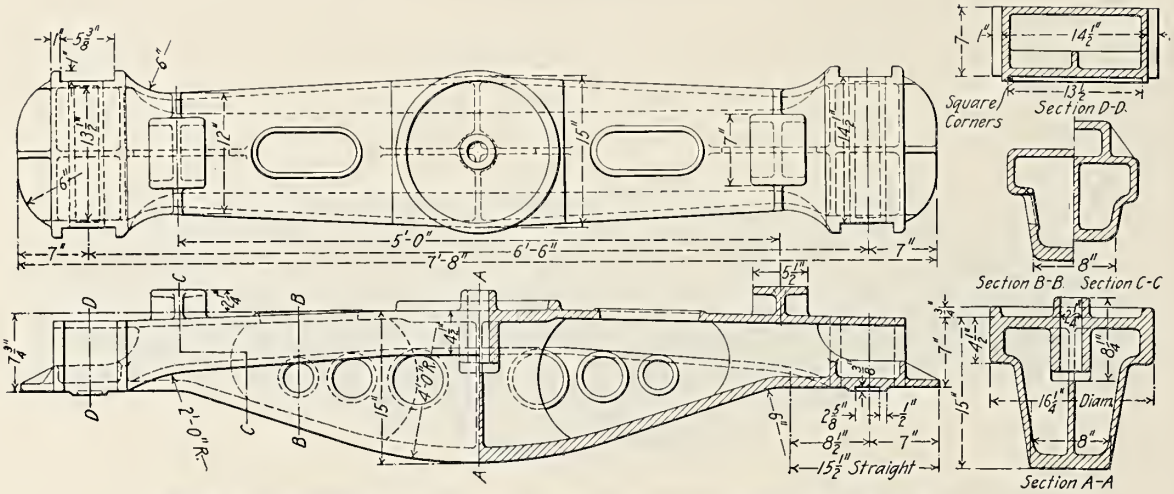

Fig. 1942—Gould Z Type Tender Truck Bolster; Gould Coupler Company.

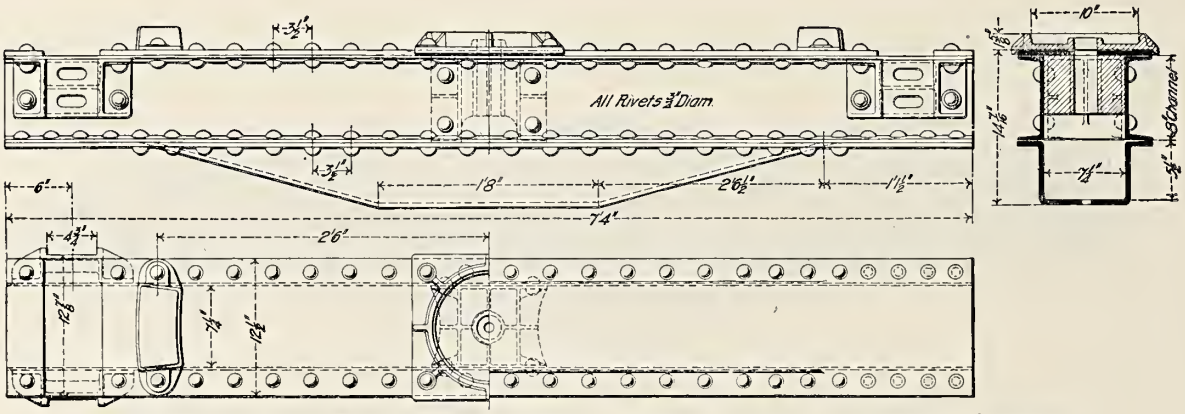

Fig. 1943—Monitor Tender Truck Bolster; Chicago Railway Equipment Company.

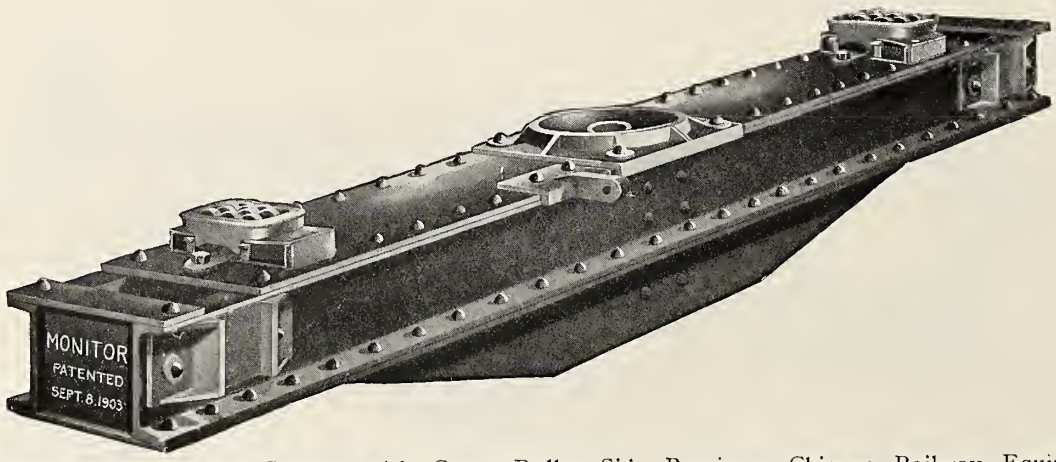

Fig. 1944—Monitor Truck Bolster with Creco Roller Side Bearings; Chicago Railway Equipment Company.

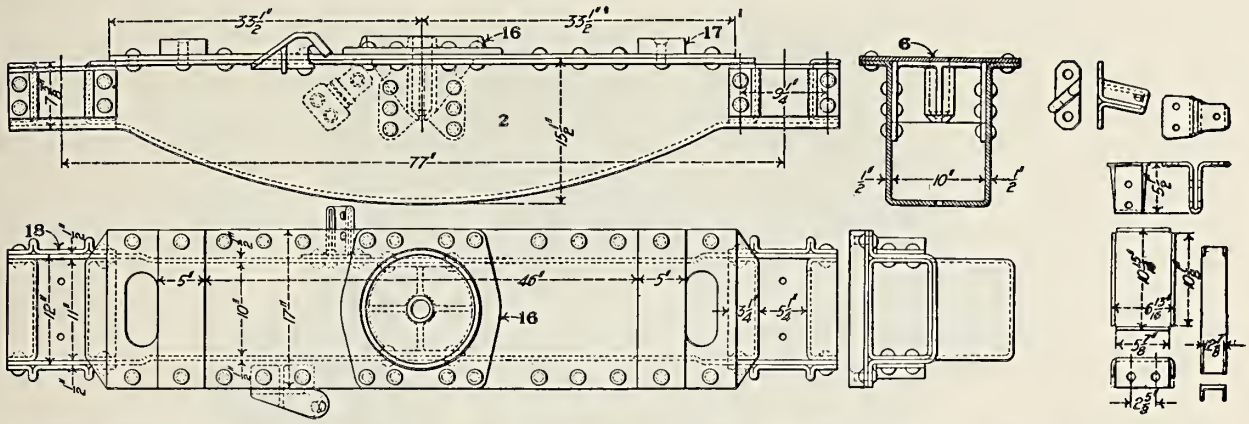

Fig. 1945—Pressed Steel Truck Bolster for Tender Truck of Atlantic Type (4-4-2) Locomotive.

Names of Parts of Bolster, Fig. 1945.

2 *Truck Bolster*
6 *Top Cover Plate*
16 *Center Plate*
17 *Side Bearing*
18 *Column Guide*

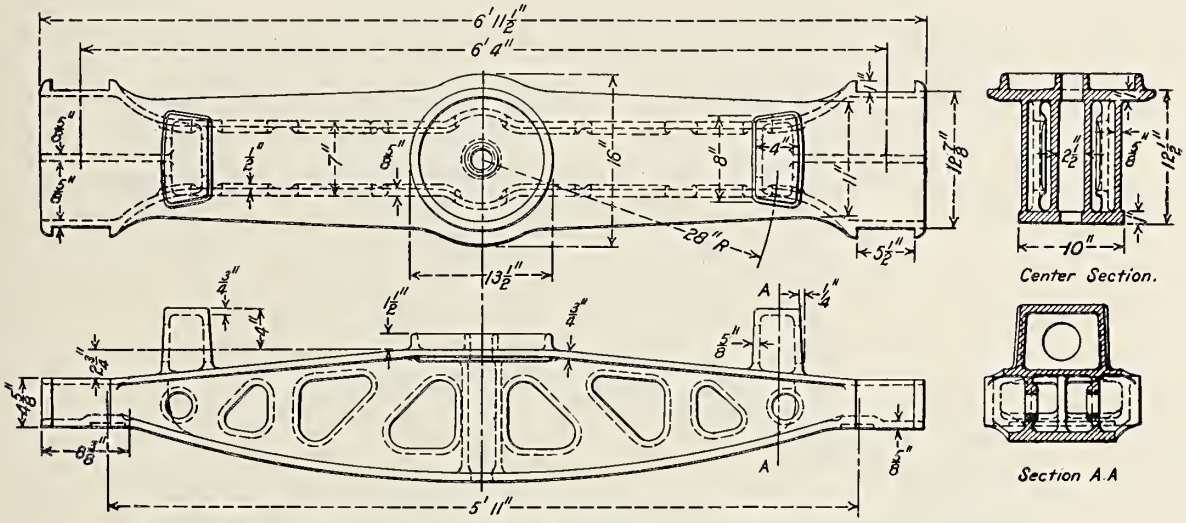

Fig. 1946—Cast Steel Tender Truck Bolster; Pittsburgh Equipment Company.

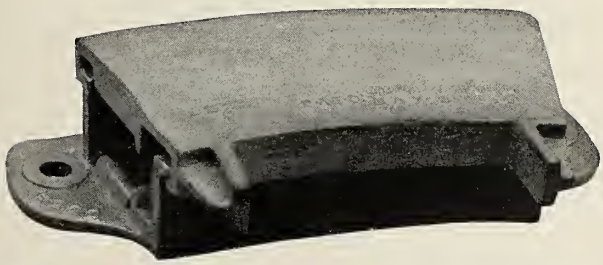

Fig. 1947—Susemihl Side Bearing; American Steel Foundries.

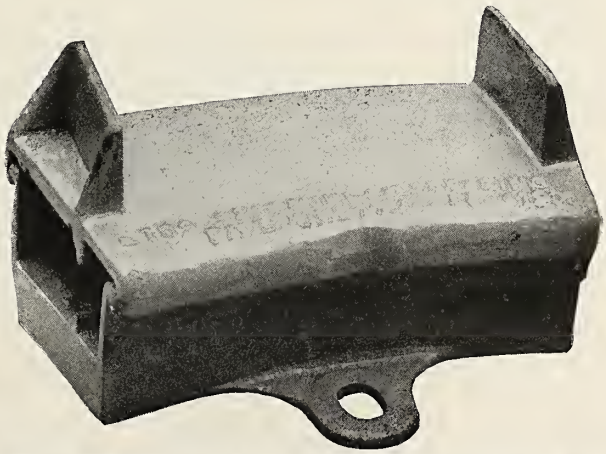

Fig. 1948—Susemihl Side Bearing; American Steel Foundries.

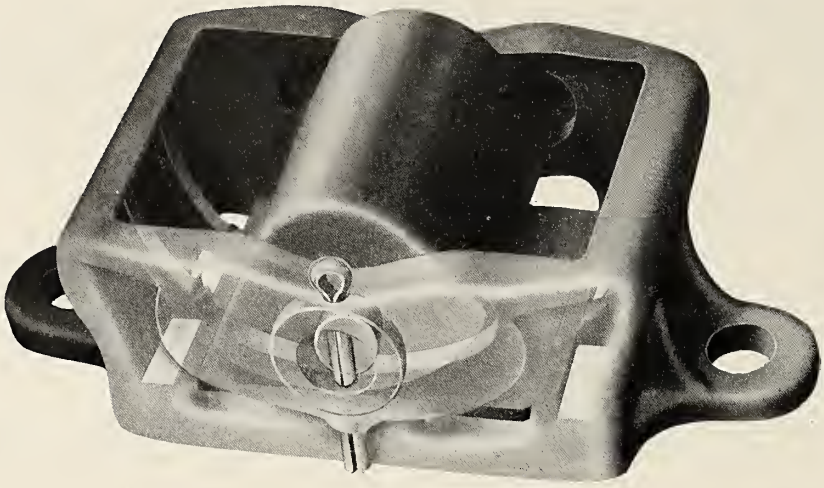

Fig. 1949—Wine Self-Centering Roller Side Bearing; Equipment Improvement Company.

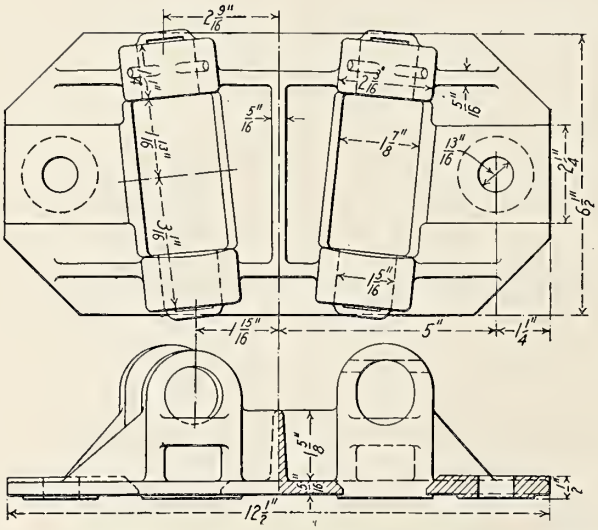

Fig. 1950—Barber Roller Side Bearing; Standard Car Truck Company.

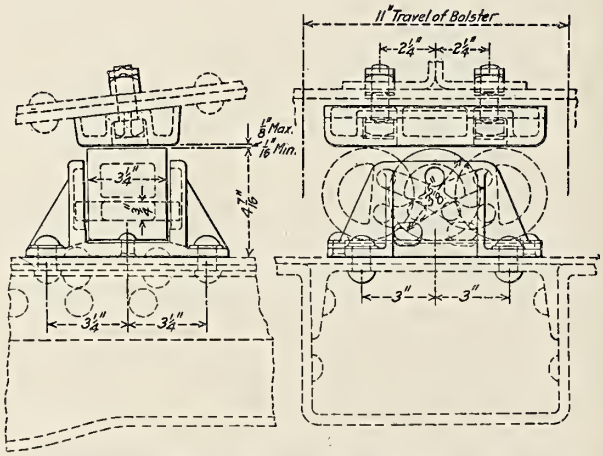

Fig. 1951—Single Roller, Self-Centering Side Bearing; Atlantic Coast Line.

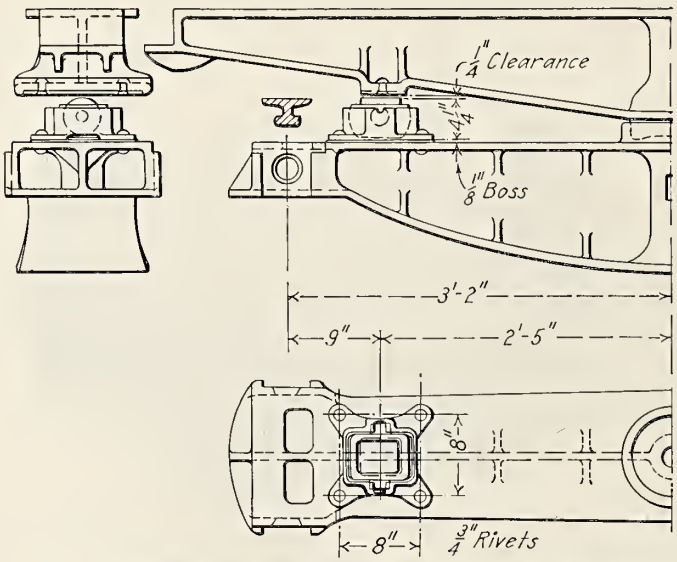

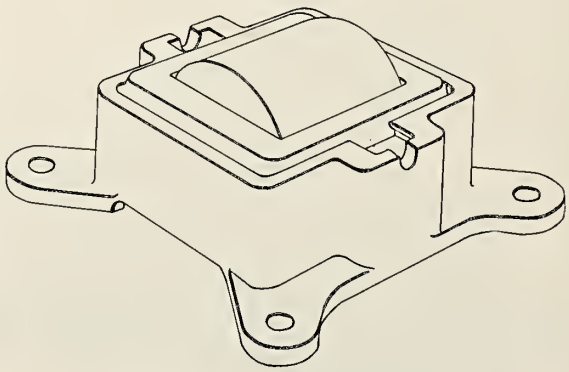

Fig. 1952—Application of Single Roller Side Bearing to Truck Bolster; W. H. Miner.

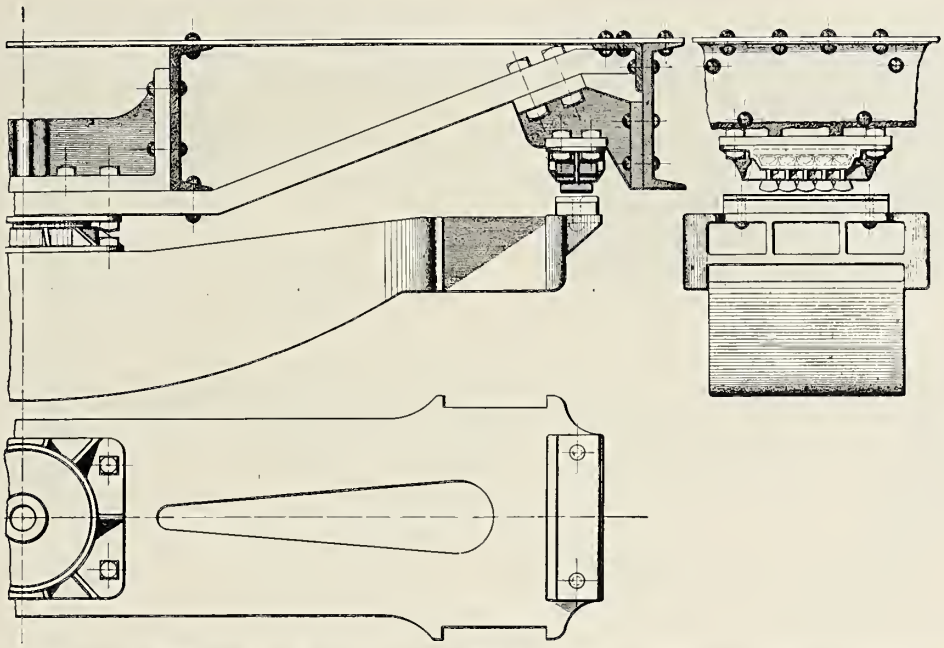

Fig. 1953—Application of Woods Tip Roller Side Bearing to 9,000 Gal. Tenders; Edwin S. Woods & Company.

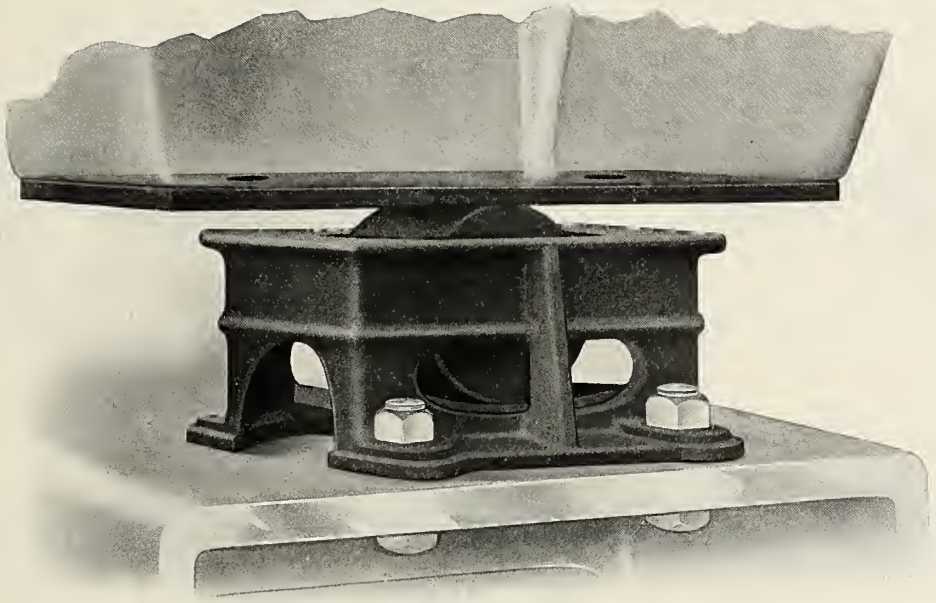

Fig. 1954—Type C Side Bearing; A. Stucki Company.

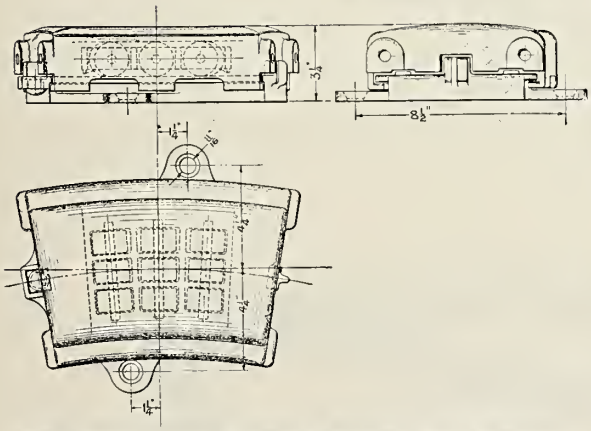

Fig. 1955—Creco Covered Roller Side Bearing; Chicago Railway Equipment Company.

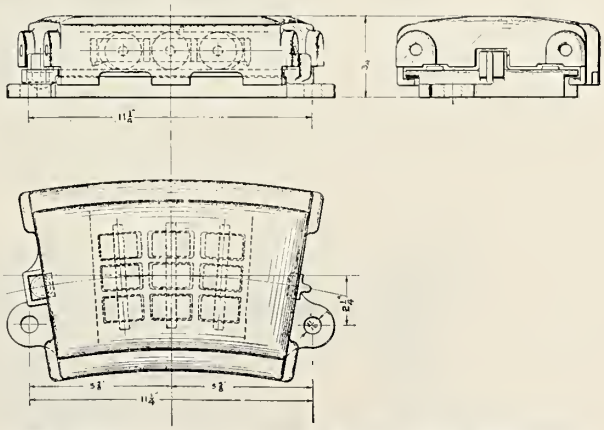

Fig. 1956—Creco Covered Roller Side Bearing; Chicago Railway Equipment Company.

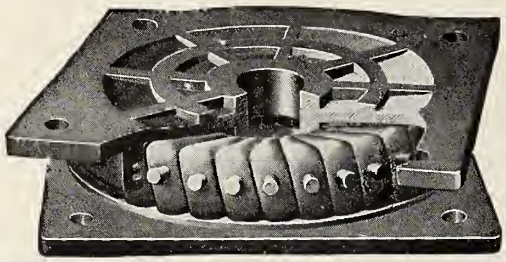

Fig. 1957—Roller Type Center Bearing with 38 Rollers; Edwin S. Woods & Company.

Fig. 1958—Center Plate Roller for Woods Center Bearing. Shows the Relation of the Flat Sided Roller to the Fully Coned Roller; Edwin S. Woods & Company.

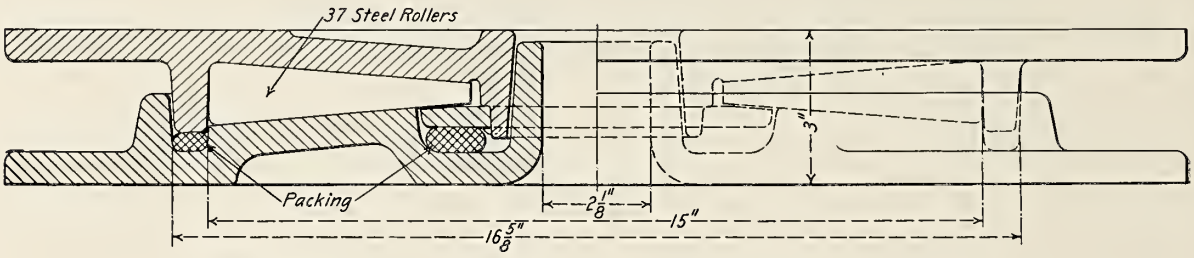

Fig. 1959—Roller Center Bearing; Standard Car Truck Company.

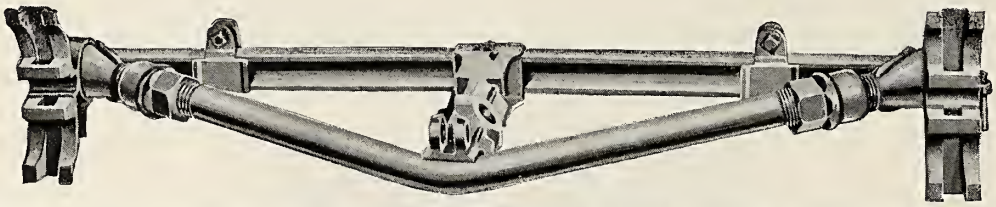

Fig. 1960—P. C. Creco Double Brake Beam for Heaviest Modern Tender Service; Chicago Railway Equipment Company.

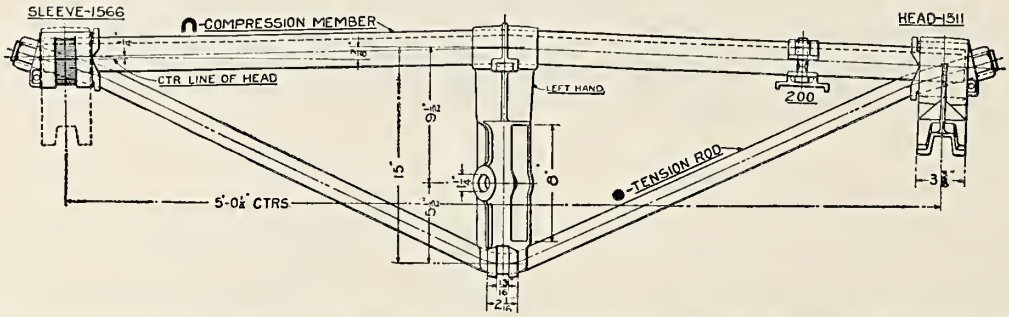

Fig. 1961—Creco Double Brake Beam for High Speed Tender Service; Chicago Railway Equipment Company.

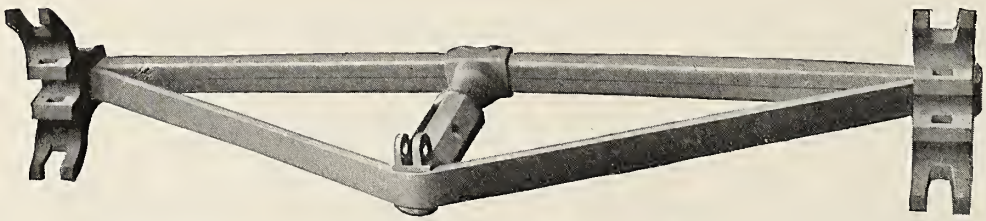

Fig. 1962—Kewanee Brake Beam; Chicago Railway Equipment Company.

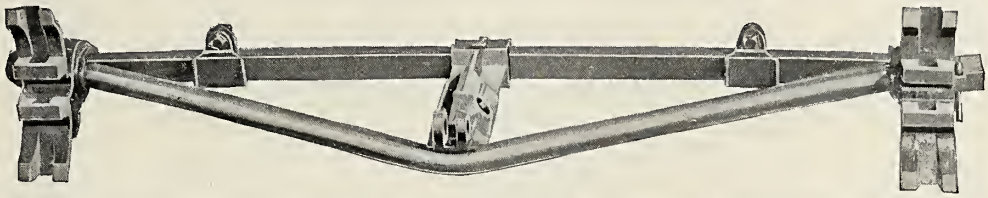

Fig. 1963—Diamond Special Double Brake Beam for High Speed Passenger Tender Service.

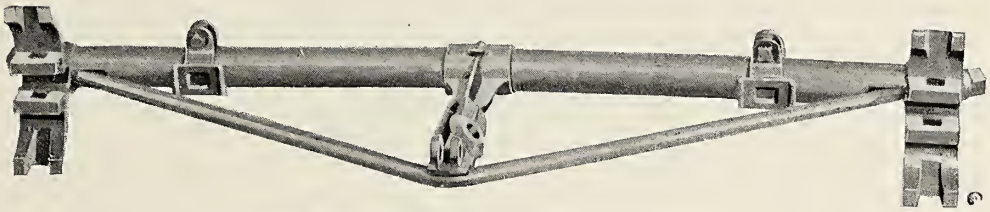

Fig. 1964—National Hollow Brake Beam.

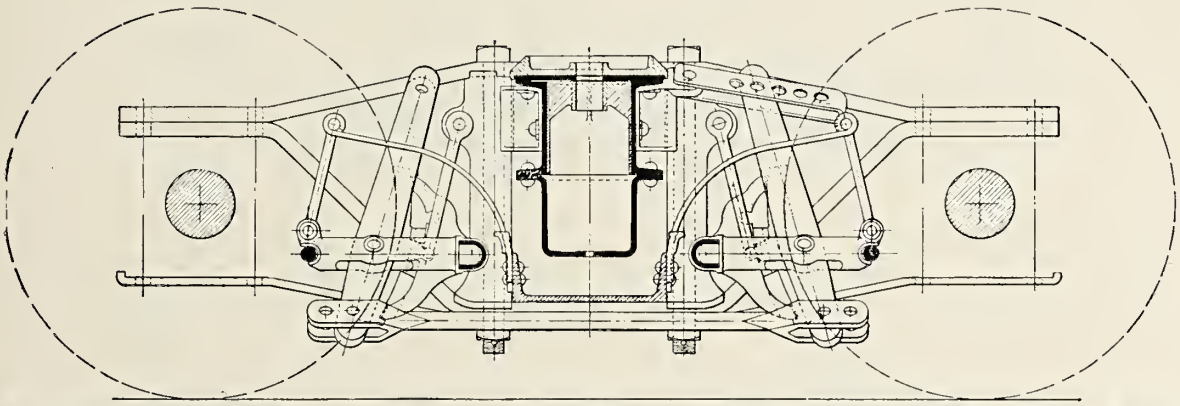

Fig. 1965—Application of Inside Hung Creco Brake Beams to Rigid Diamond Arch Bar Tender Truck.

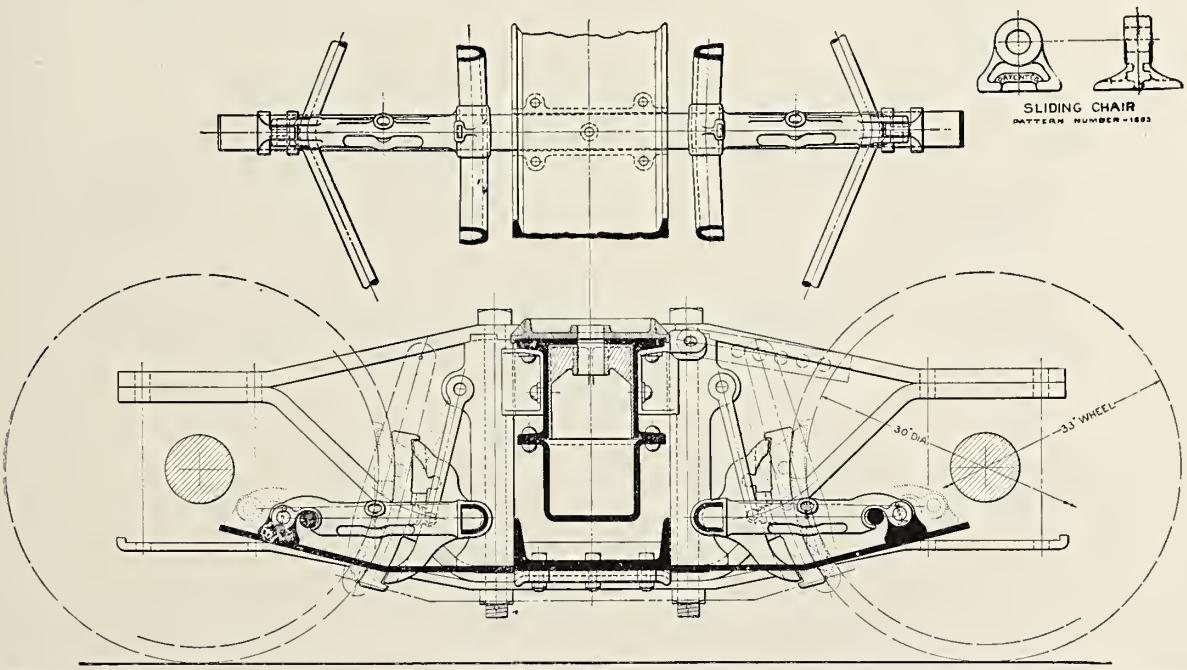

Fig. 1966—Application of Creco Sliding Third Point Support and Safety Device to Rigid Diamond Arch Bar Tender Truck.

Chicago Railway Equipment Company.

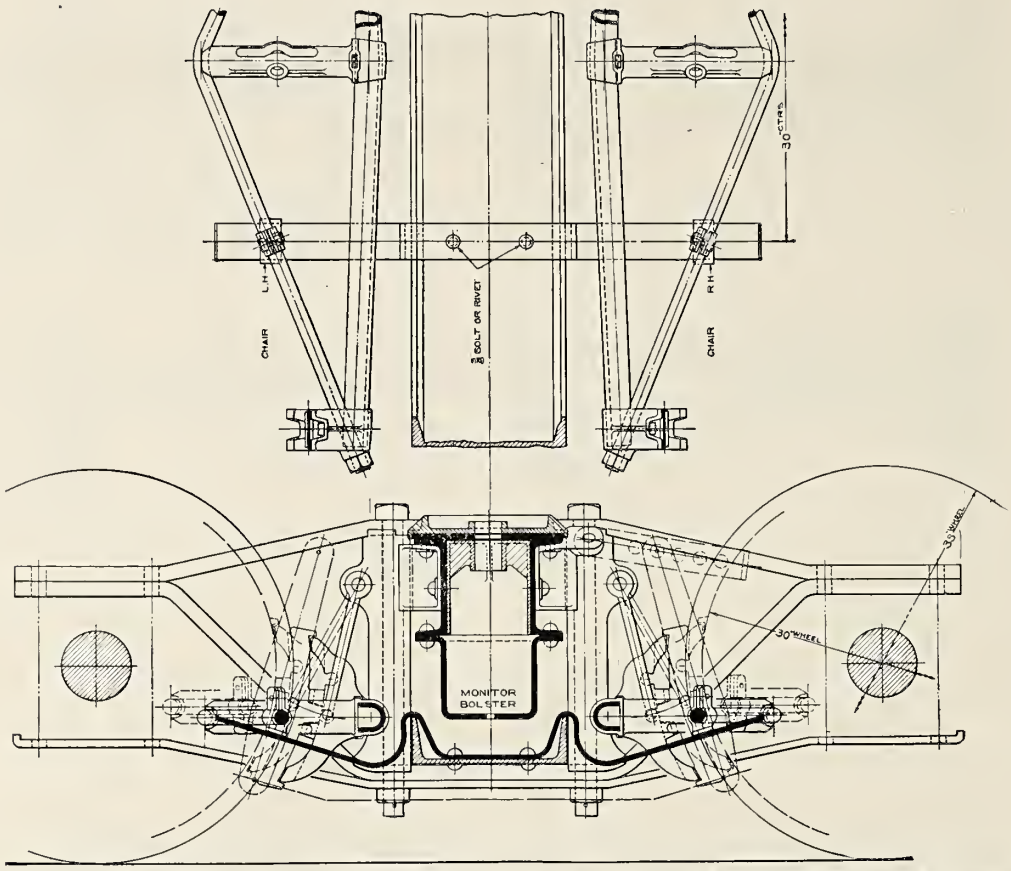

Fig. 1967—Creco Four Point Support and Safety Device as Applied to Rigid Diamond Tender Truck.

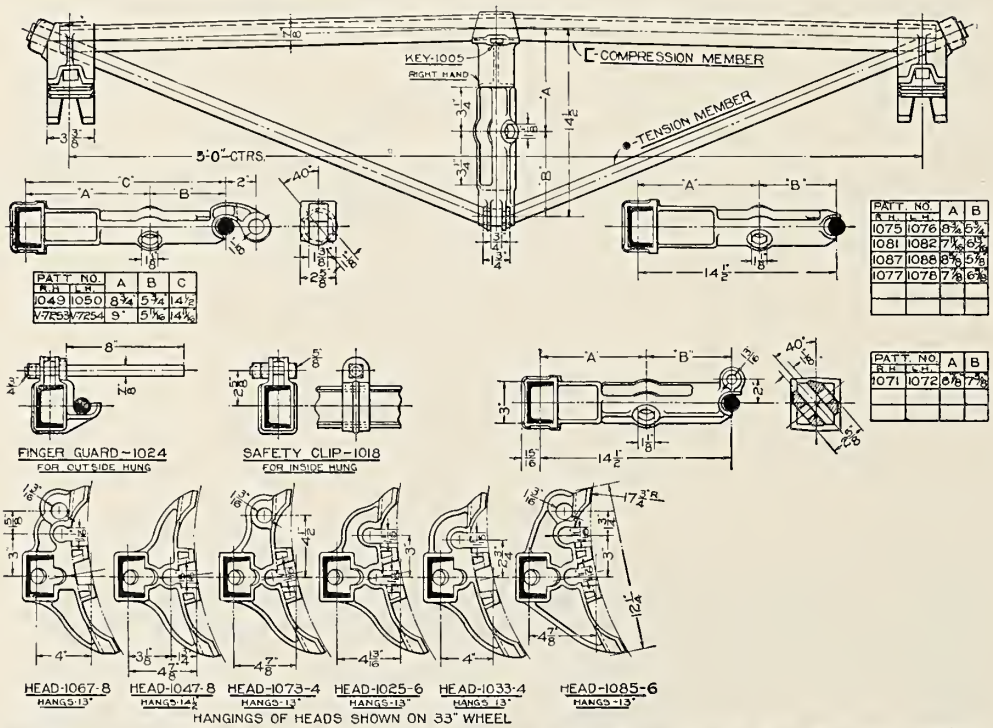

Fig. 1968—No. 2 M. C. B. Drexel Brake Beam with Keyed Strut for Tender Service.

Chicago Railway Equipment Company.

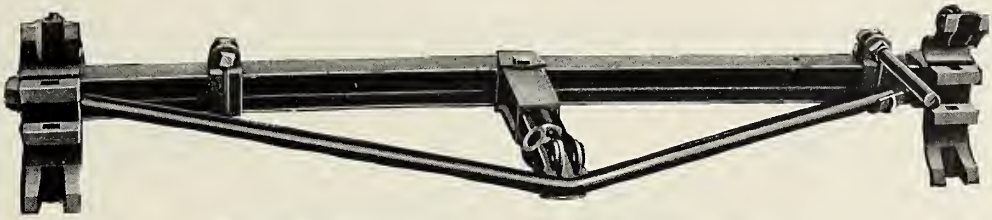

Fig. 1969—Drexel Brake Beam with Keyed Strut.

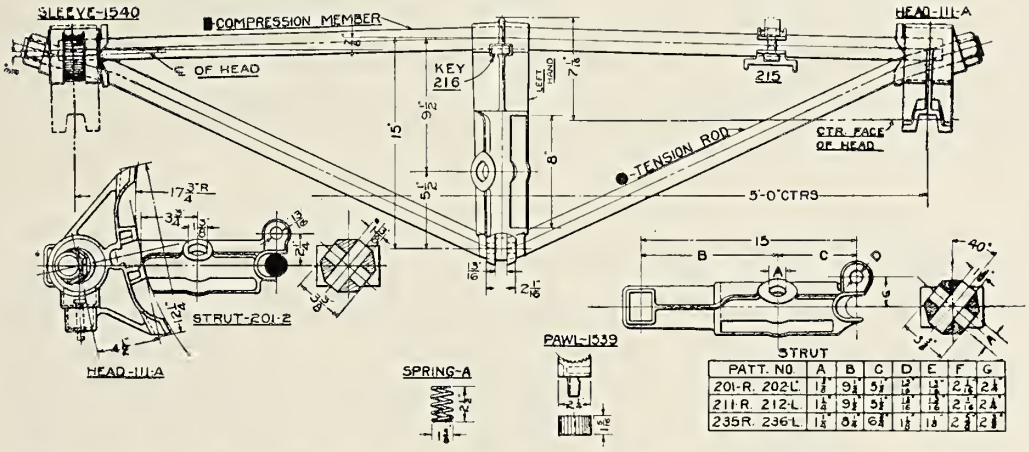

Fig. 1970—No. 1 M. C. B. Drexel Brake Beam with Keyed Strut for Tender Service.

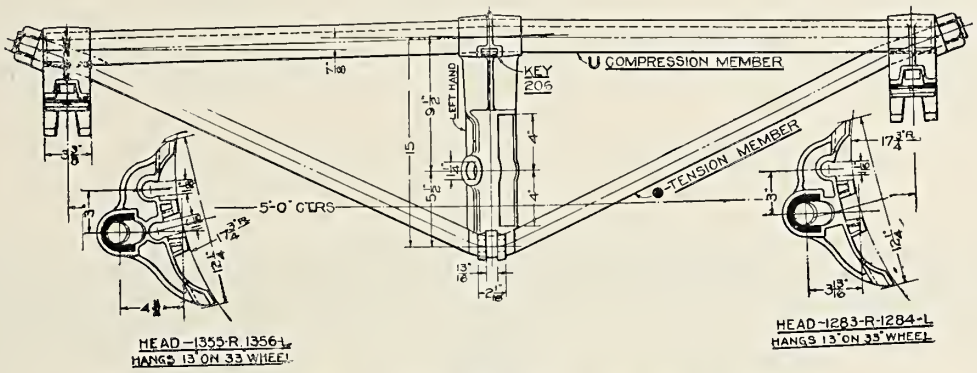

Fig. 1971—E. L. Creco Brake Beam for High Speed Tender Service.

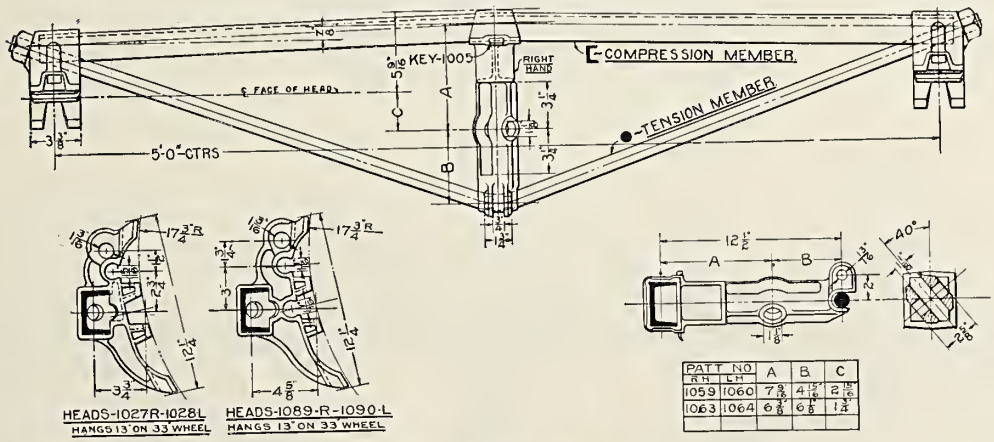

Fig. 1972—Diamond Special Double Brake Beam for High Speed Tender Service.

Chicago Railway Equipment Company.

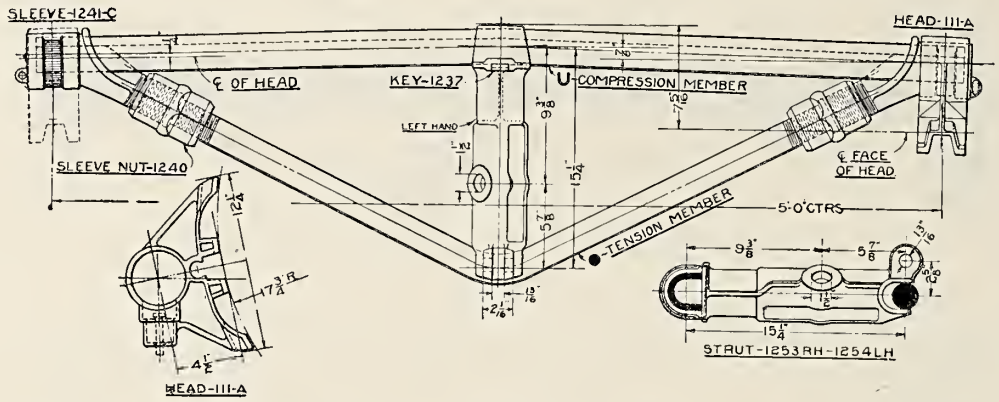

Fig. 1973—P. C. Creco Double Brake Beam for Heaviest Modern Tender Service.

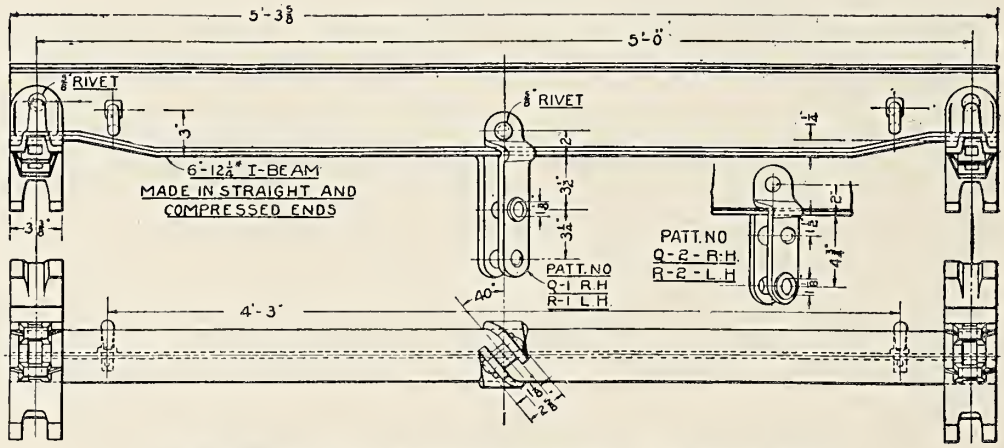

Fig. 1974—Monarch Solid Compressed End Brake Beam.

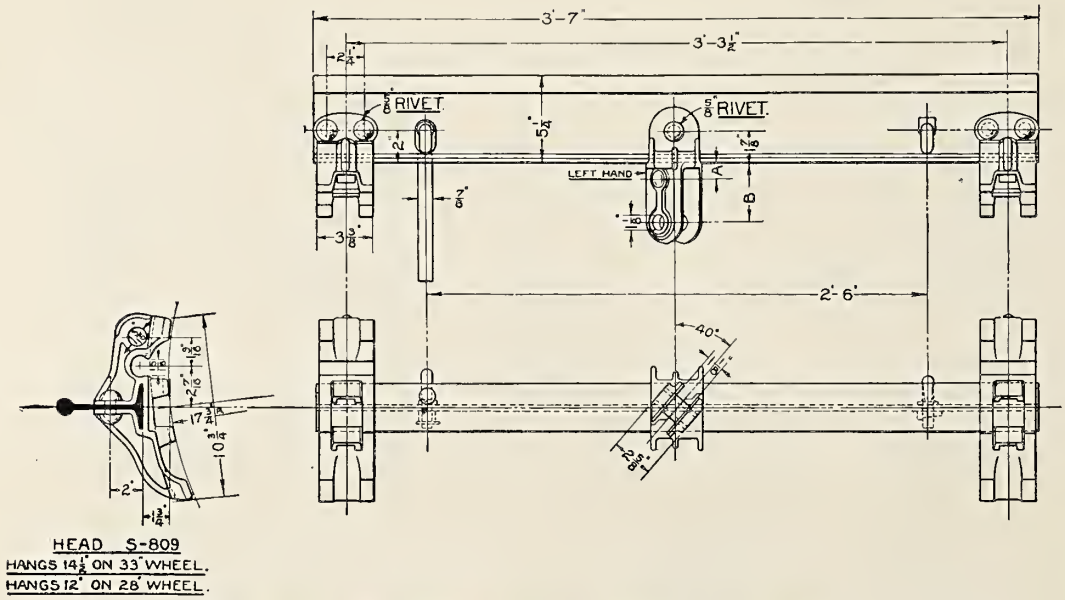

Fig. 1975—Sterlingworth Narrow Gauge Brake Beam.

Chicago Railway Equipment Company.

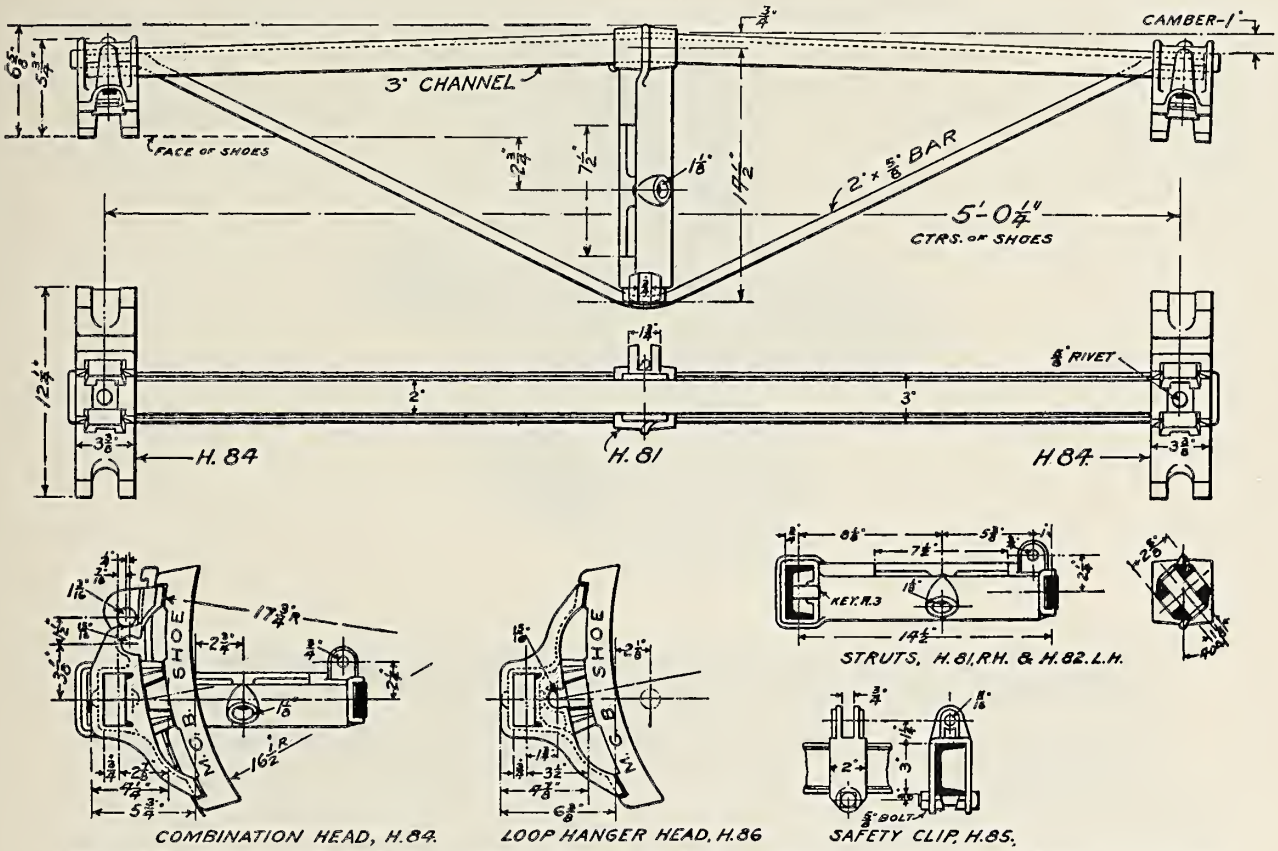

Fig. 1976—Huntoon Special No. 2 Brake Beam for Heavy Tender Service; Joliet Railway Supply Company.

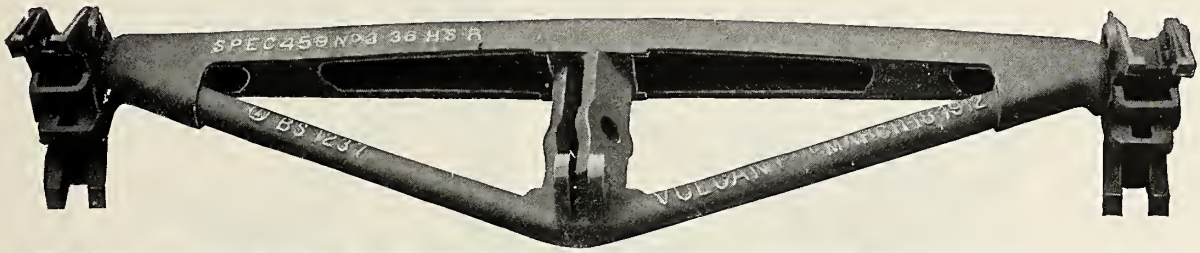

Fig. 1977—Vulcan No. 121 Cast Steel Adjustable Head Brake Beam for Heavy Tenders; American Steel Foundries.

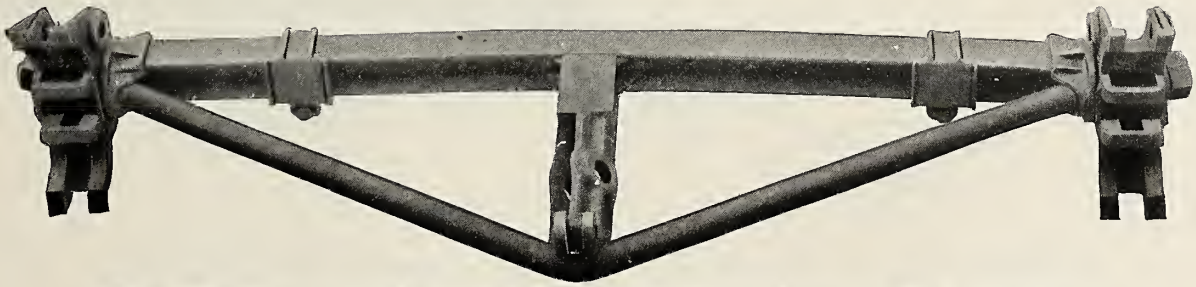

Fig. 1978—Hercules High Speed Tender Brake Beam; American Steel Foundries.

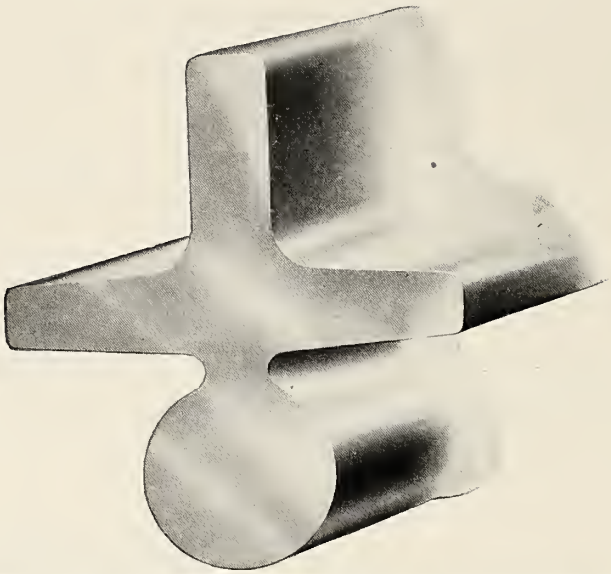

Fig. 1979—Section of Davis Solid Truss; Davis Brake Beam Company.

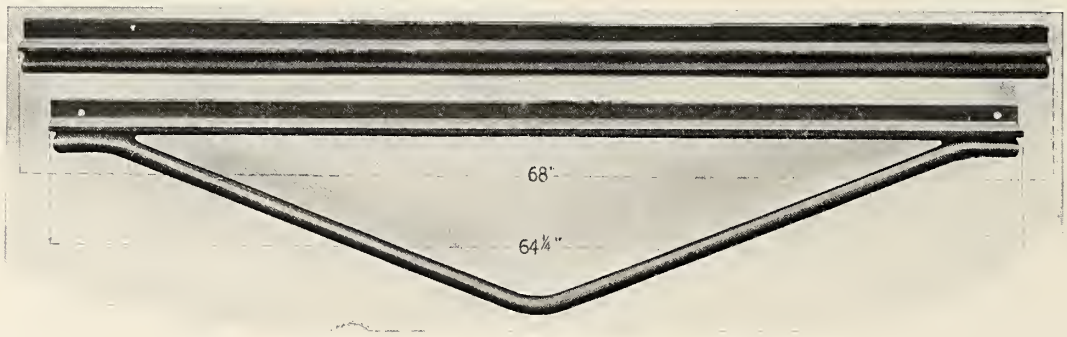

Fig. 1980—Davis Solid Truss; Davis Brake Beam Company.

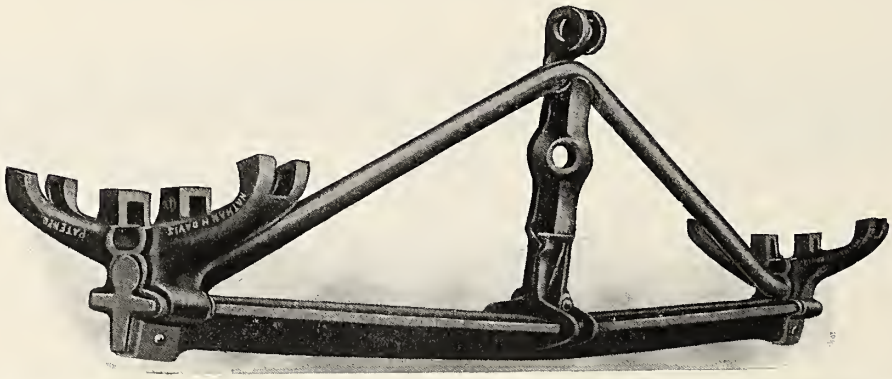

Fig. 1981—Davis Solid Truss Brake Beam No. 3 for Tender Service; Davis Brake Beam Company.

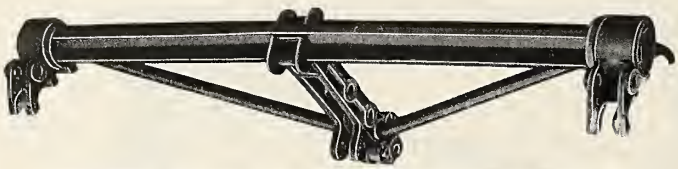

Fig. 1982—Davis Solid Truss Brake Beam with "D" Adjustable Head, Single Link Hanger; Davis Beam Company.

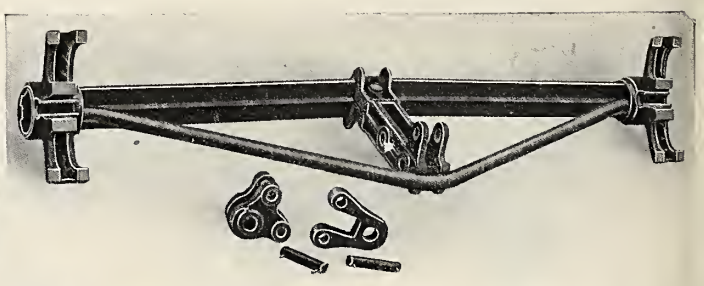

Fig. 1983—Davis Solid Truss Brake Beam with "F" Adjustable Head, Loop Hanger; Davis Brake Beam Company.

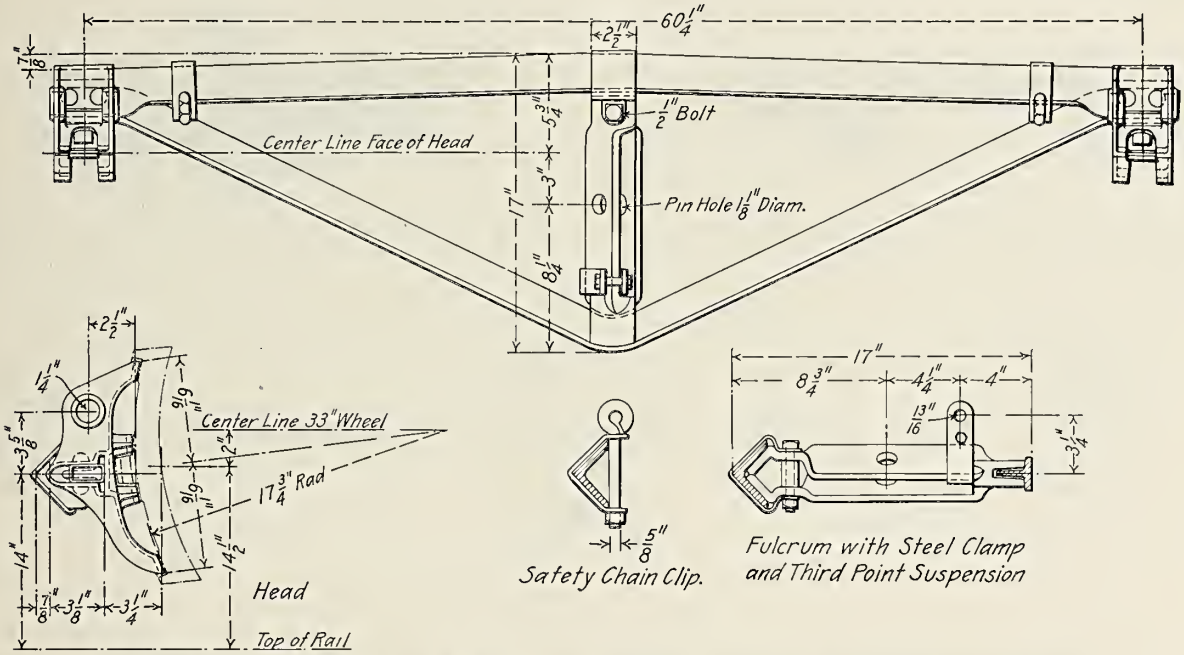

Fig. 1984—No. 2 Waycott Brake Beam for Tenders; Damascus Brake Beam Company.

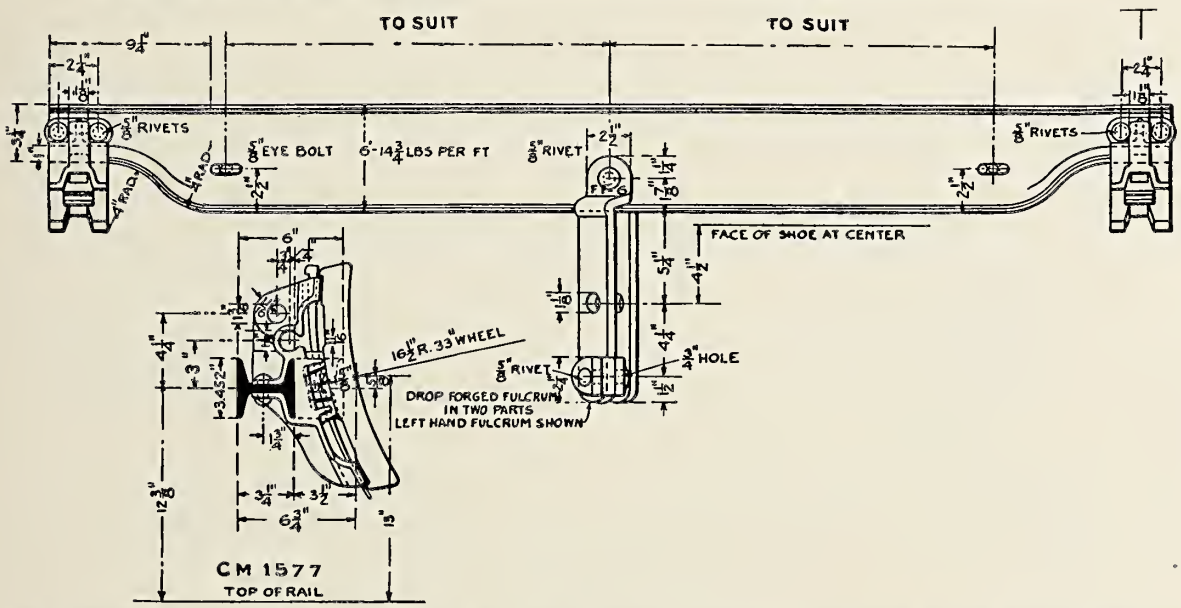

Fig. 1985—Damascus 6 in. Brake Beam for Close Inside Hanging; Damascus Brake Beam Company.

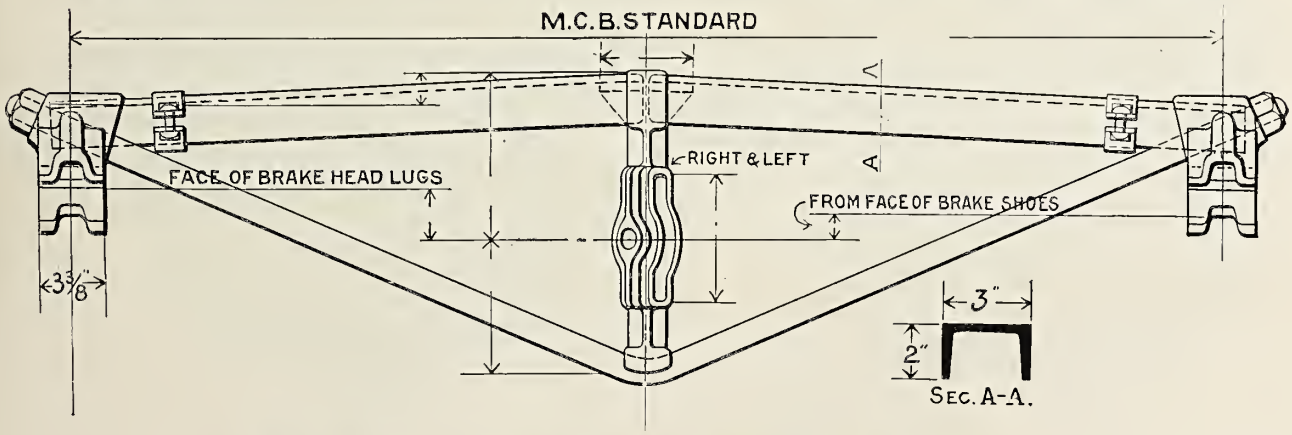

Fig. 1986—Brake Beam; Pennsylvania Brake Beam Company.

Fig. 1987—Finger Guard; The National Malleable Castings Company.

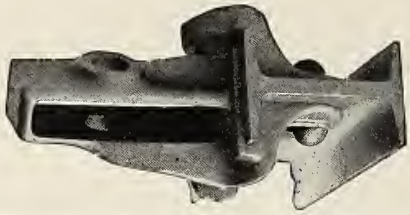

Fig. 1988—Two Piece Adjustable Brake Beam Fulcrum; The National Malleable Castings Company.

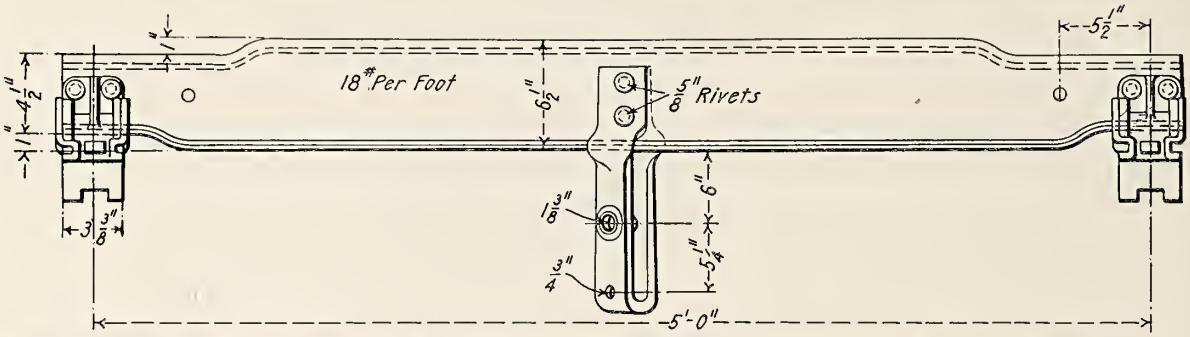

Fig. 1989—Special Section Tender Brake Beam with Ends Depressed; Buffalo Brake Beam Company.

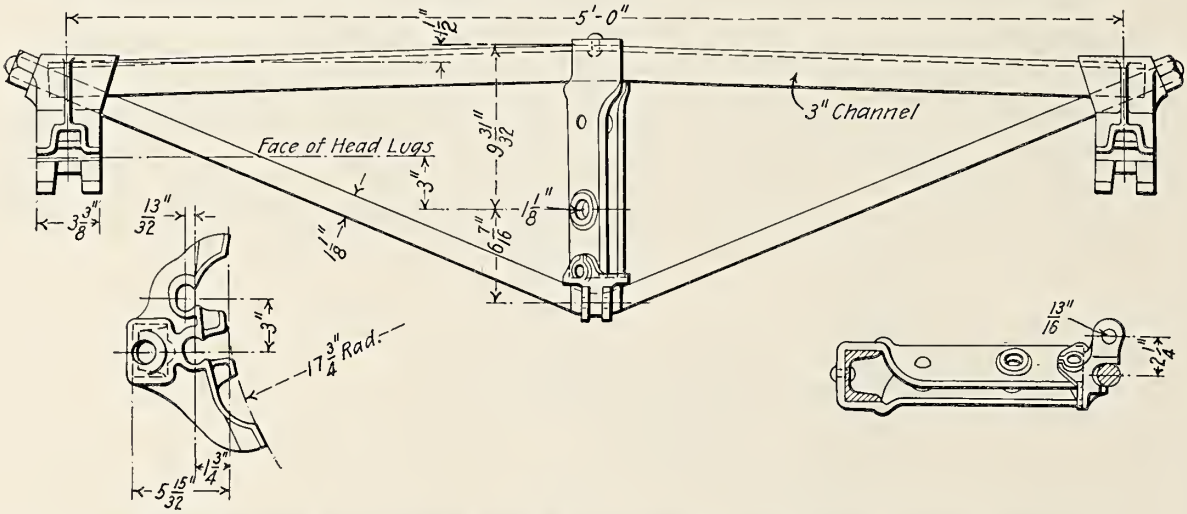

Fig. 1990—Tender Brake Beam with Forged Strut; Buffalo Brake Beam Company.

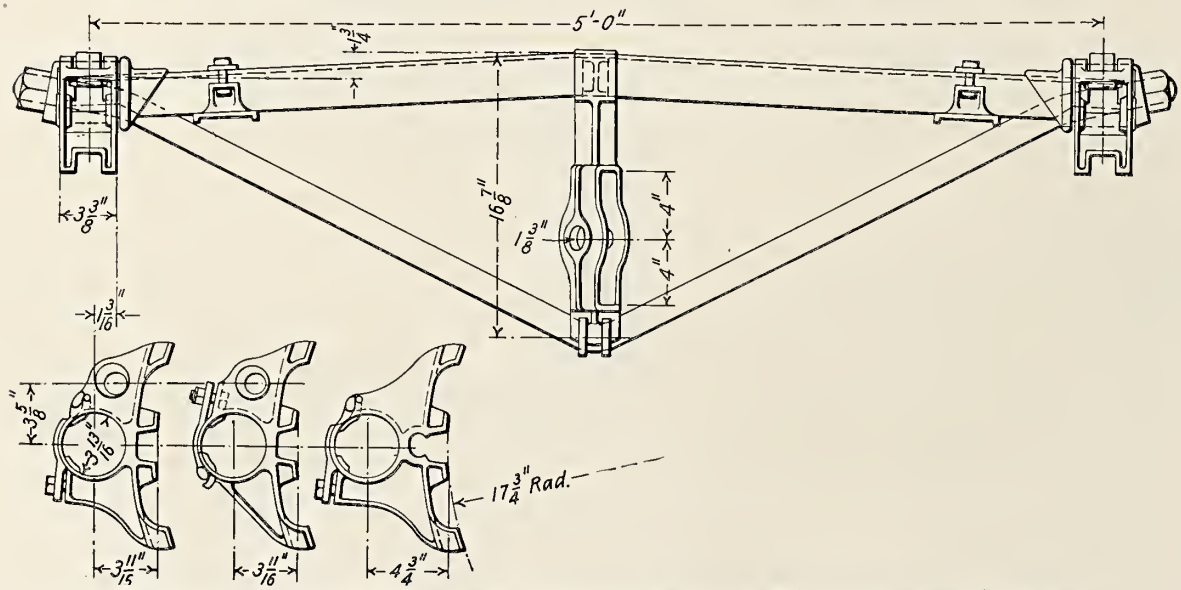

Fig. 1991—Tender Brake Beam with Adjustable Heads; Buffalo Brake Beam Company.

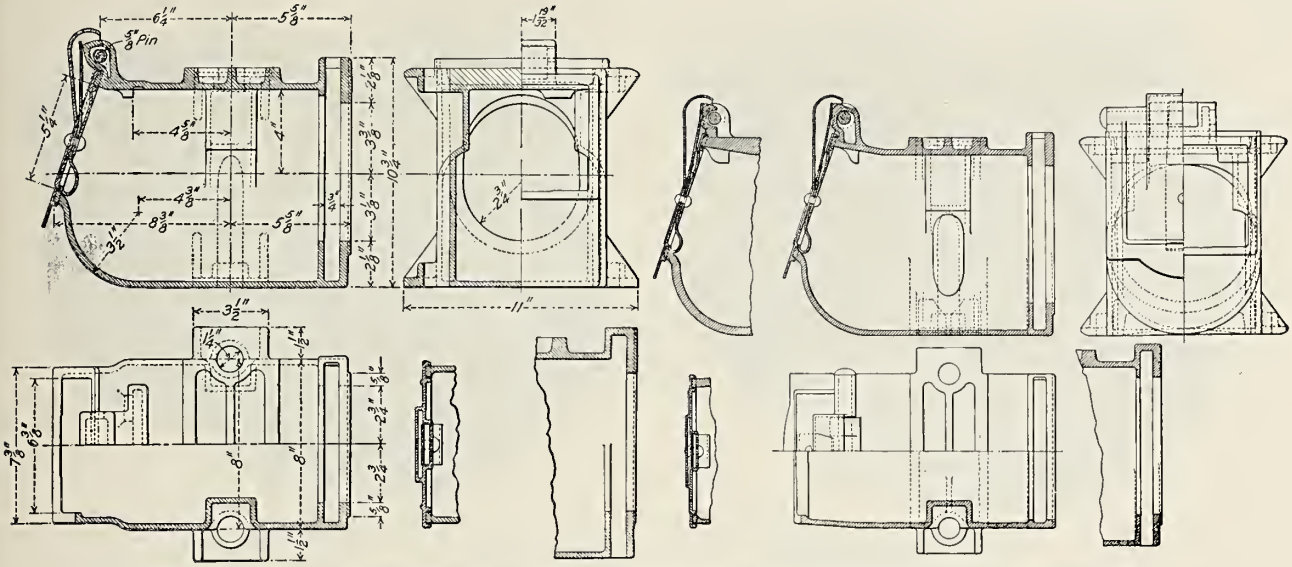

Fig. 1992—Creco Journal Box and Patent Lid; Chicago Railway Equipment Company.

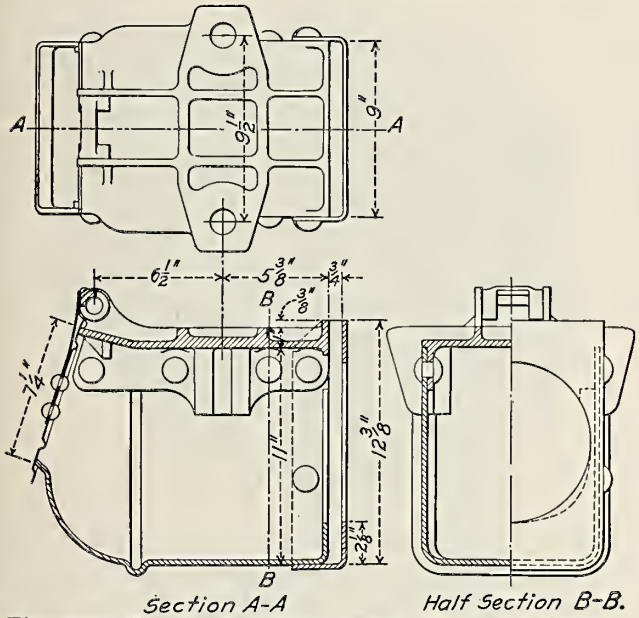

Fig. 1993—Kensington Steel Journal Box with Outside Lid Spring.

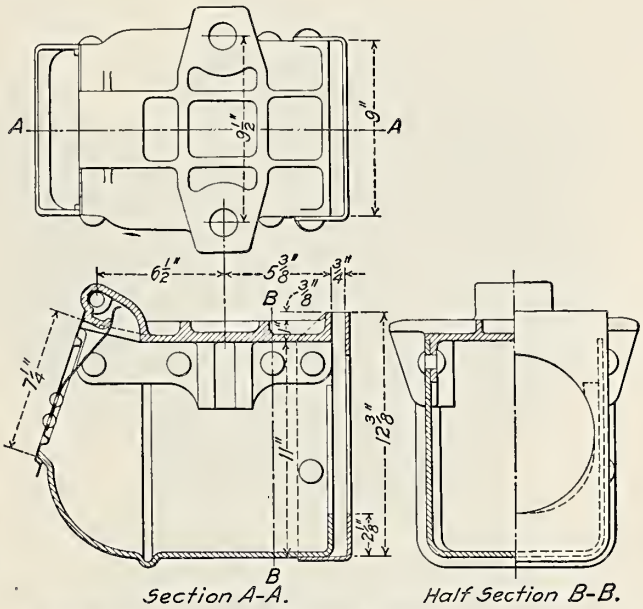

Fig. 1994—Kensington Steel Journal Box with Inside Lid Spring.

Union Spring & Manufacturing Company.

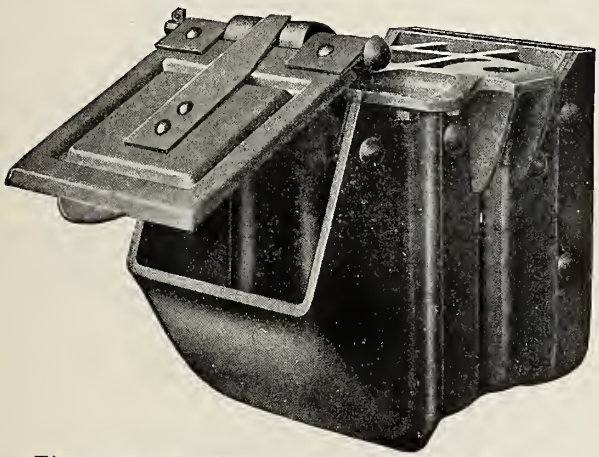

Fig. 1995—Kensington Steel Journal Box with Outside Lid Spring.

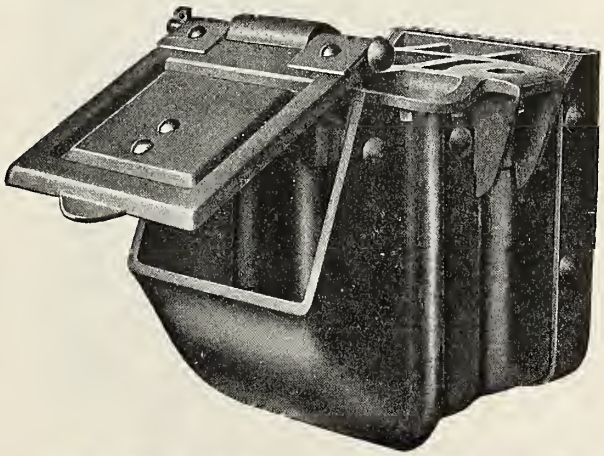

Fig. 1996—Kensington Steel Journal Box with Inside Lid Spring.

Union Spring & Manufacturing Company.

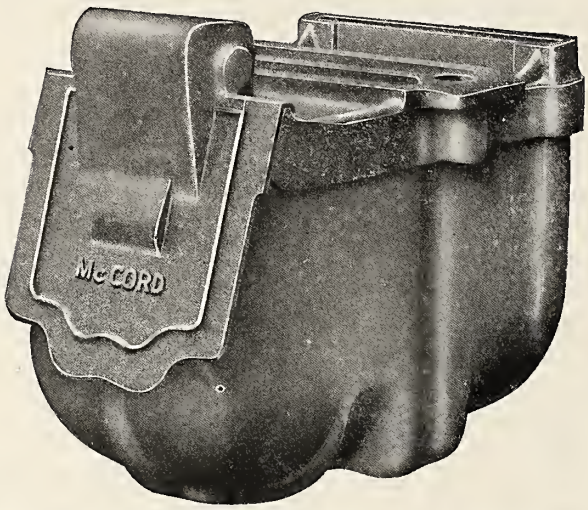

Fig. 1997—McCord Steel Journal Box with Coil Spring Pinless Lid for Arch Bar Trucks; McCord & Company.

Fig. 1998—McCord Steel Journal Box with Coil Spring Pinless Lid for Pedestal Trucks; McCord & Company.

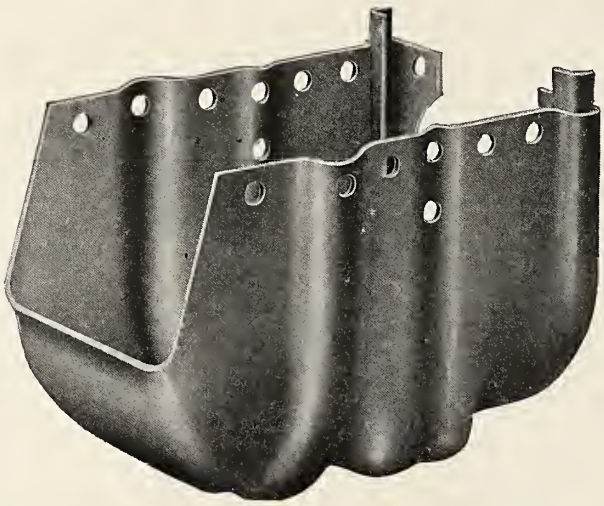

Fig. 1999—Perforated Steel Cellar Ready for Mould; McCord & Company.

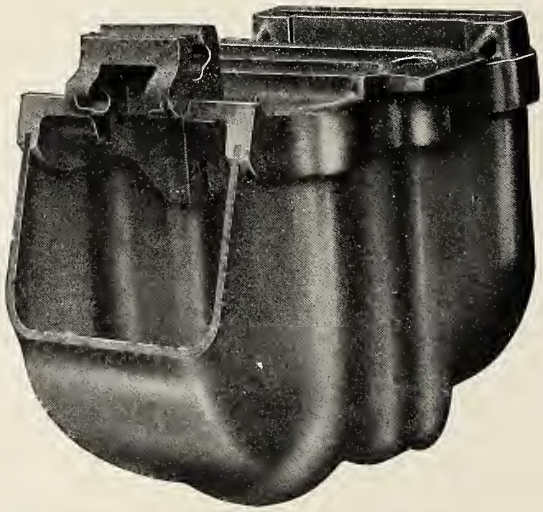

Fig. 2000—Finished Box After Pouring Showing Complete Union of Top and Cellar; McCord & Company.

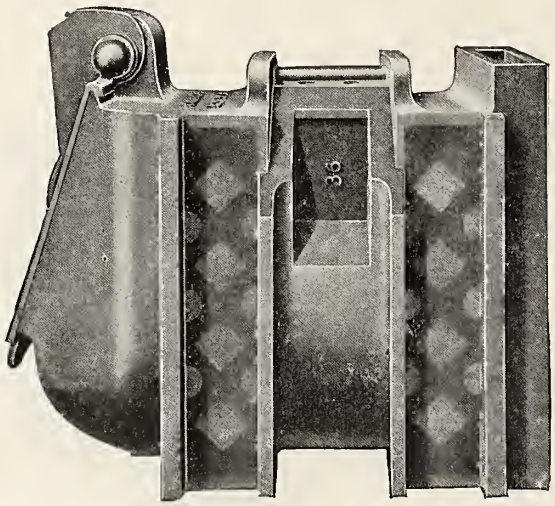

Fig. 2001—McCord Malleable Iron Pedestal Truck Journal Box with Continuous Steel Inserts for Protection of Pedestal Channels; McCord & Company.

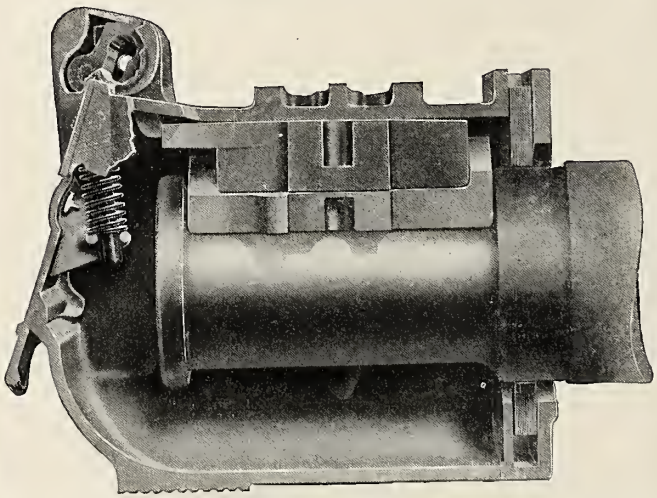

Fig. 2002—McCord Malleable Iron Journal Box for Arch Bar Trucks with Coil Spring Lid; McCord & Company.

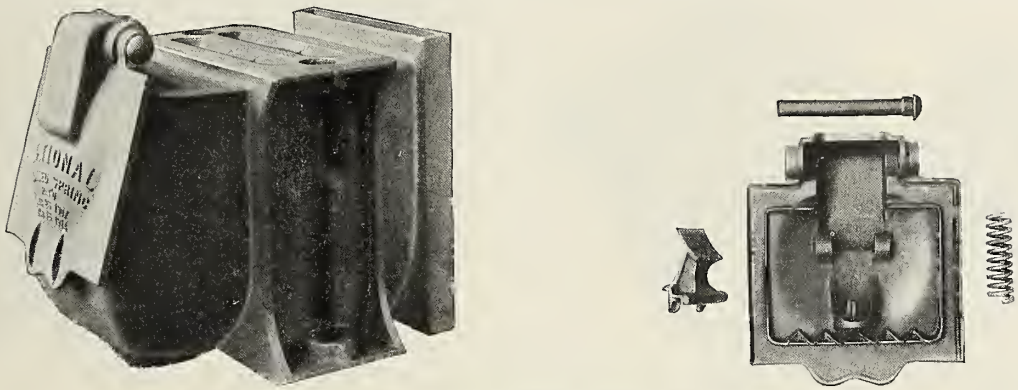

Fig. 2003—National Coiled Spring Journal Box and Parts.

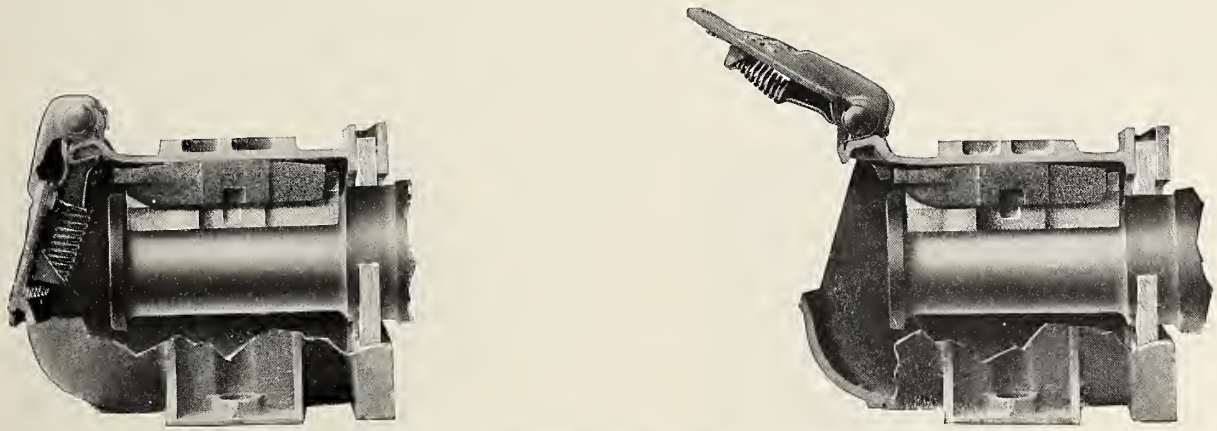

Fig. 2004—National Coiled Spring Journal Box, Open and Closed.

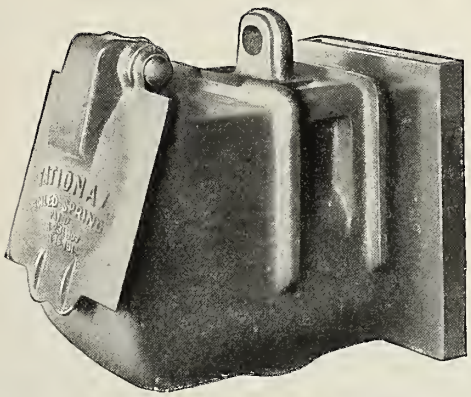

Fig. 2005—National Coiled Spring Journal Box for Scullin Truck

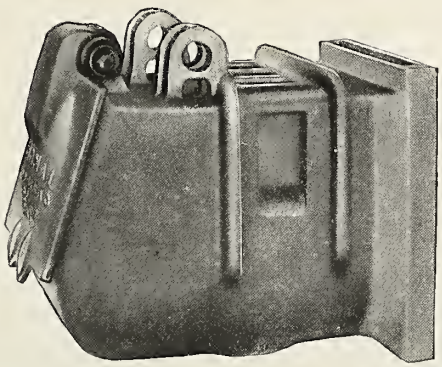

Fig. 2006—National Coiled Spring Journal Box for Vulcan Truck.

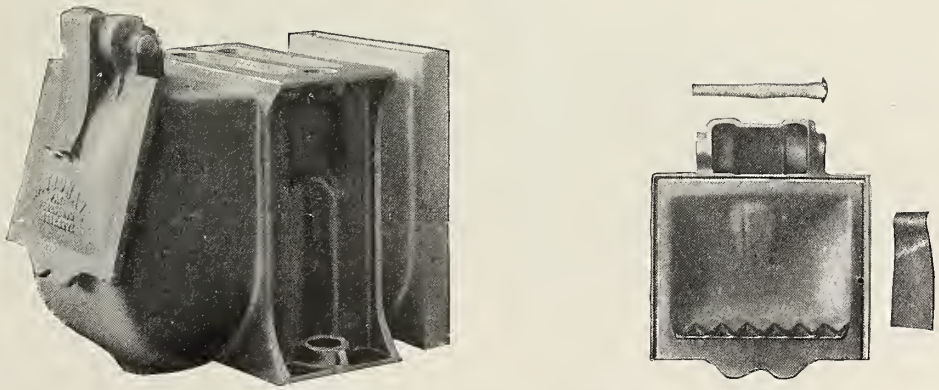

Fig. 2007—National Flat Spring Journal Box and Parts.

The National Malleable Castings Company.

Fig. 2008—National Equalizing Wedge and Coiled Spring Journal Box and Wedge; The National Malleable Castings Company.

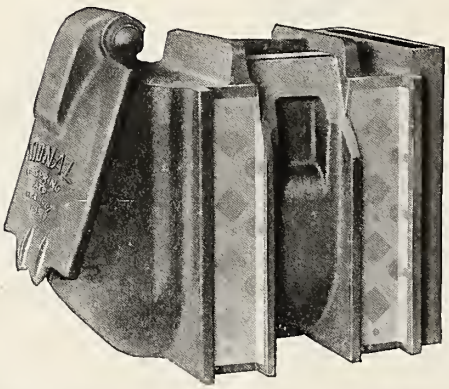

Fig. 2009—National Coiled Spring Journal Box with Steel Inserts; The National Malleable Castings Company.

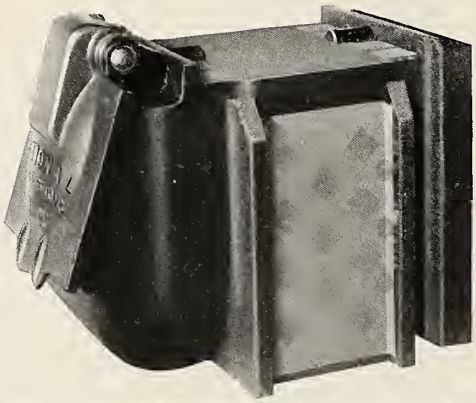

Fig. 2010—National Coiled Spring Journal Box for Commonwealth Tender Trucks; The National Malleable Castings Company.

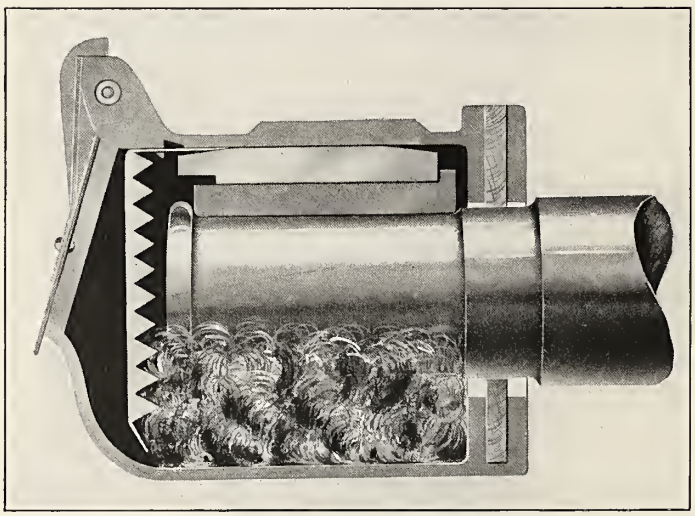

Fig. 2011—Nuway Packing Guard in Position in Journal Box; Nuway Packing Guard Co.

Fig. 2012—Lateral Motion Journal Box; Standard Car Truck Company.

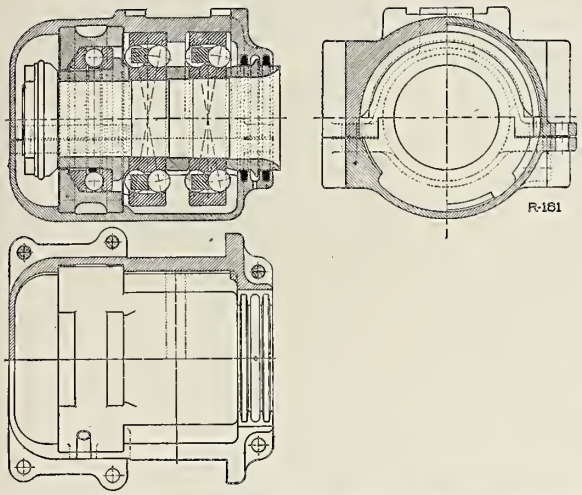

Fig. 2013—Arrangement of Ball Bearing Journal Boxes on Tender and Trucks of Pacific Type (4-6-2) Locomotive on the Swedish State Railways; S. K. F. Ball Bearing Company.

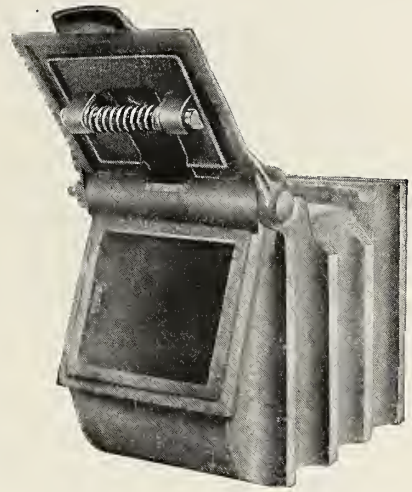

Fig. 2014—Taylor M. C. B. Journal Box with Improved Self-Locking Dust Proof Cover; W. P. Taylor Company.

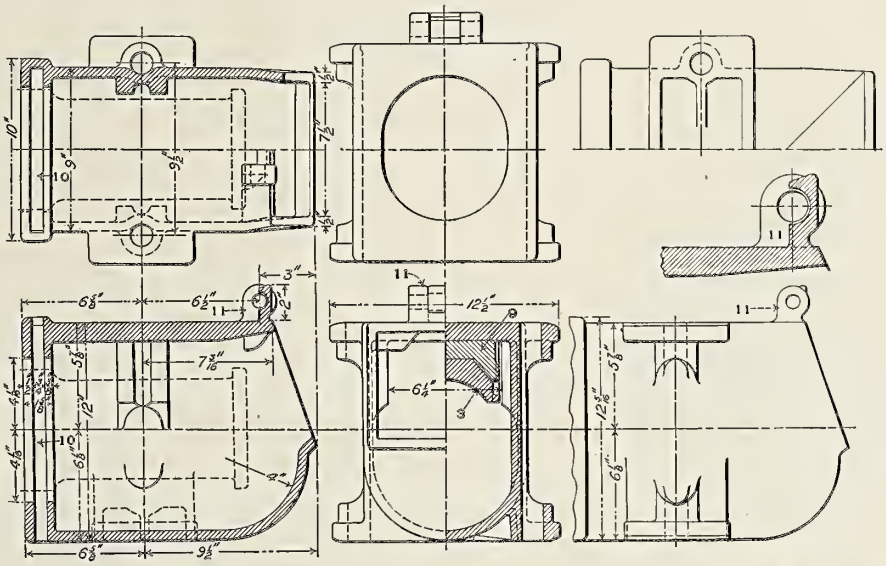

Fig. 2015—Journal Box for 5½-in. x 10-in. Journals; Pennsylvania Railroad.

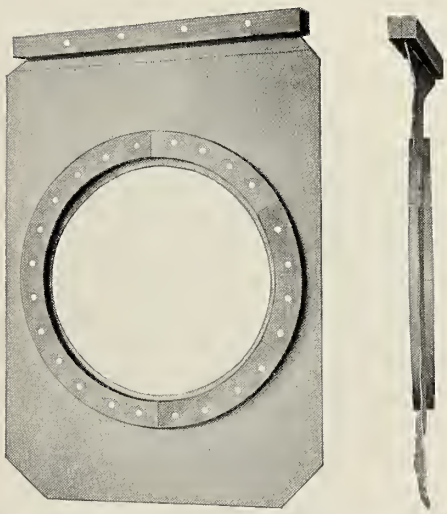

Fig. 2016—Symington Journal Box Dust Guard; T. H. Symington Company.

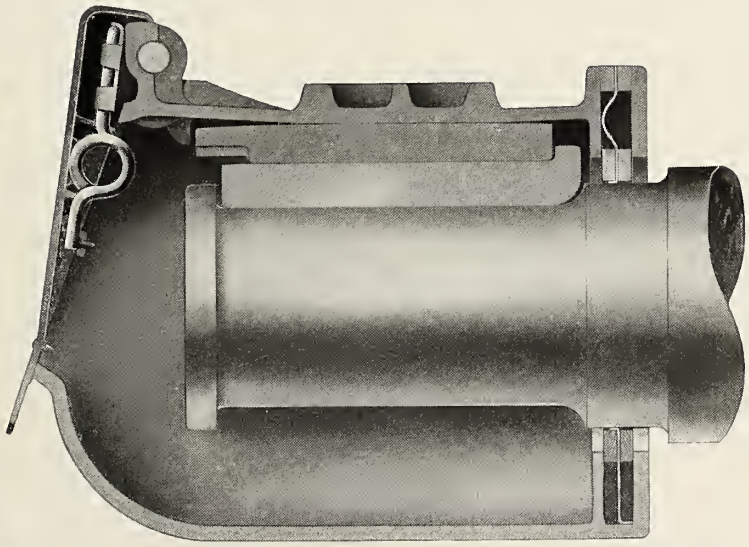

Fig. 2017—Symington M. C. B. Journal Box, Sectional View; T. H. Symington Company.

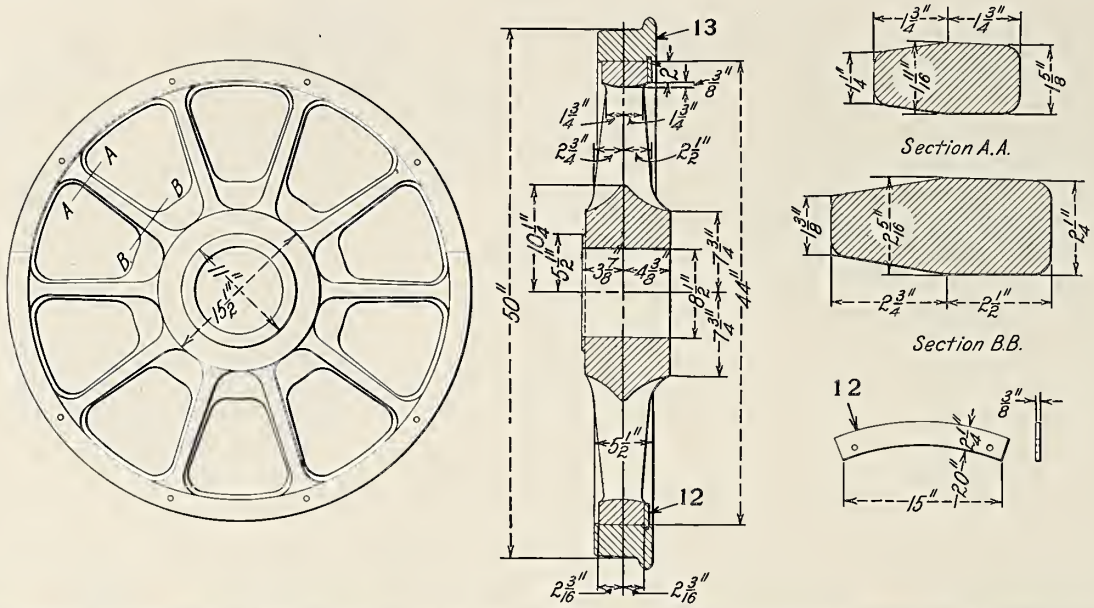

Fig. 2018—Trailing Truck Wheel Center for Class E6 Atlantic Type (4-4-2) Locomotive; Pennsylvania Railroad.

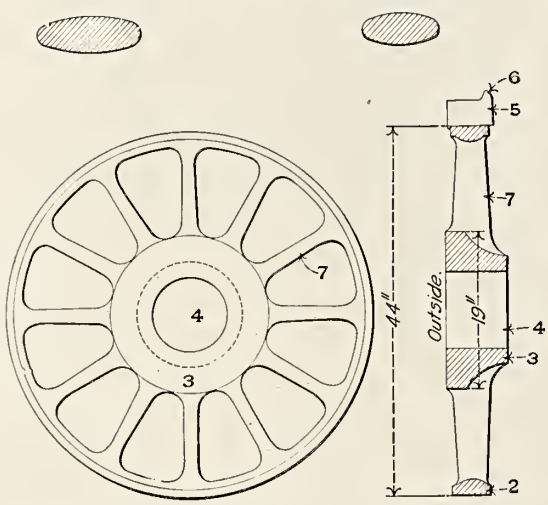

Fig. 2019—Trailing Truck Wheel Center; American Locomotive Company.

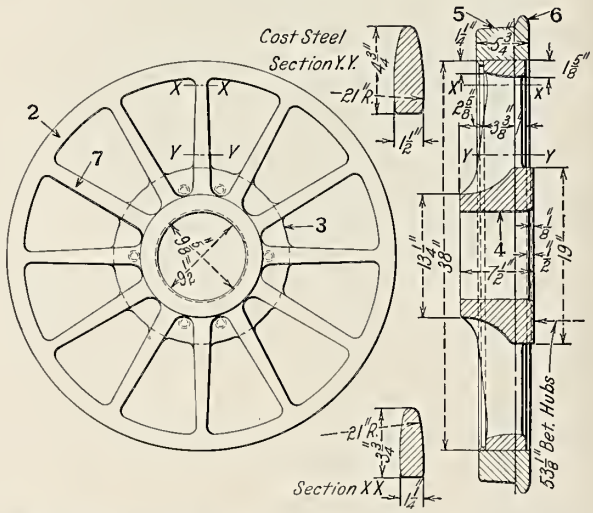

Fig. 2020—Trailing Truck Wheel Center for Mountain Type (4-8-2) Locomotive. Built for the Chesapeake & Ohio by the American Locomotive Company.

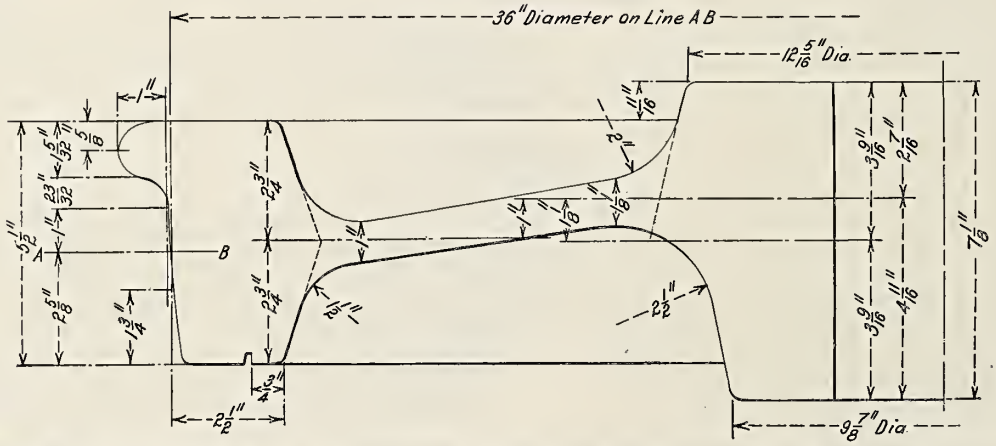

Fig. 2021—Schoen Steel M. C. B. Standard 36 in. Engine Truck Wheel; Carnegie Steel Company.

Numbers Refer to Names of Parts on Page 729.

Names of Parts of Engine Truck Wheels, Figs. 2018-2021.

2 *Rim*
3 *Hub*
4 *Axle Seat*
5 *Tire*
6 *Flange*
7 *Spoke*
12 *Retaining Ring*
13 *Retaining Ring Lip*

Fig. 2022—Davis Cast Steel Engine Truck Wheel; American Steel Foundries.

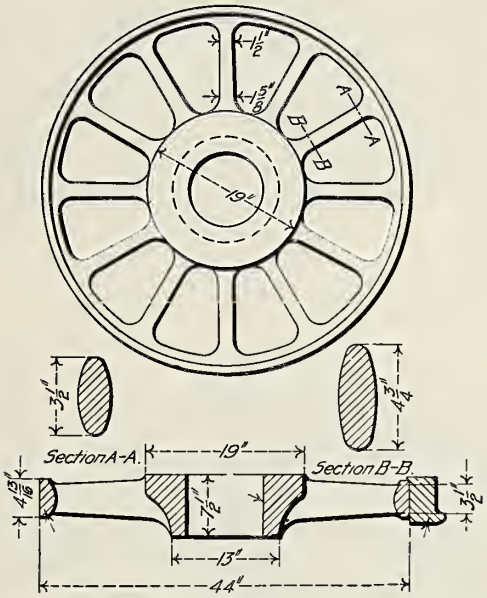

Fig. 2023—Trailing Truck Wheel Center; American Locomotive Company.

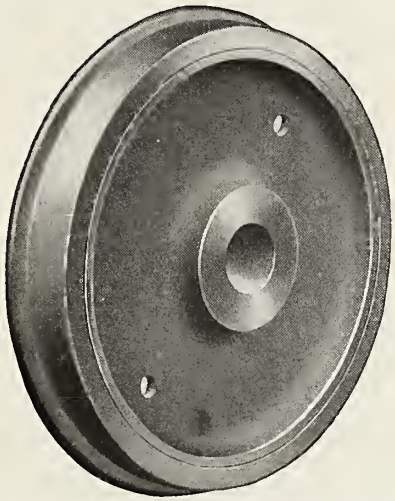

Fig. 2024—Forged Steel Engine Truck Wheel.

Fig. 2025—Davis 33 in. Cast Steel Wheel, Weight 600 lbs.; American Steel Foundries.

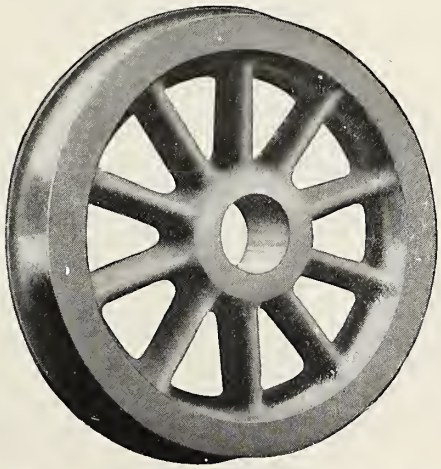

Fig. 2026—Steel Spoke Wheel Made in 33 in. to 36 in. Diameters and 1¾ in. to 2½ in. Rim Thickness; Lobdell Car Wheel Company.

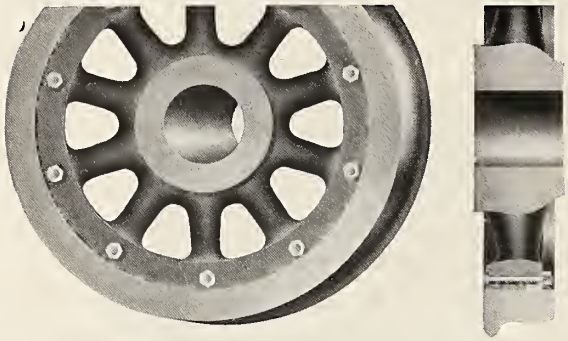

Fig. 2027—Engine Truck Wheel with Cast Iron or Cast Steel Spoke Center Held by Shrinkage and Bolts.

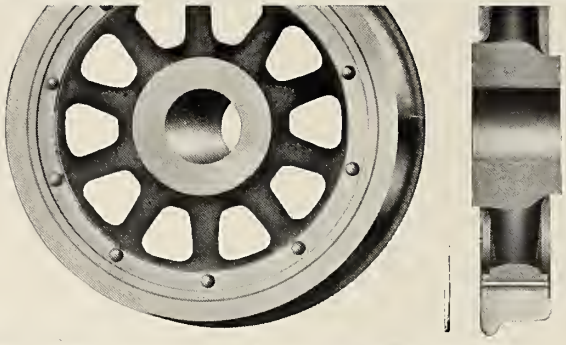

Fig. 2028—Engine Truck Wheel with Cast Iron or Cast Steel Spoke Center Held by Shrinkage, Double Lip Retaining Rings and Rivets.

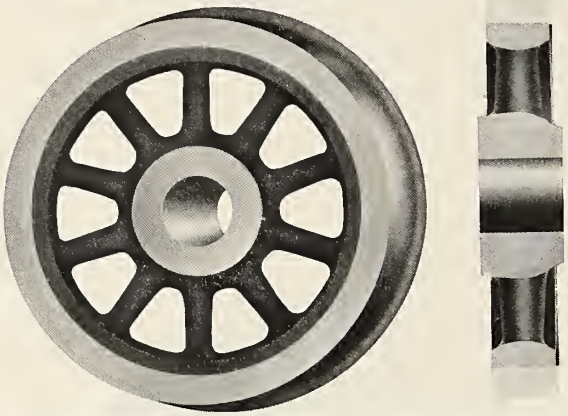

Fig. 2029—Engine Truck Wheel with Cast Iron or Cast Steel Spoke Center Held by Shrinkage and Shoulder.

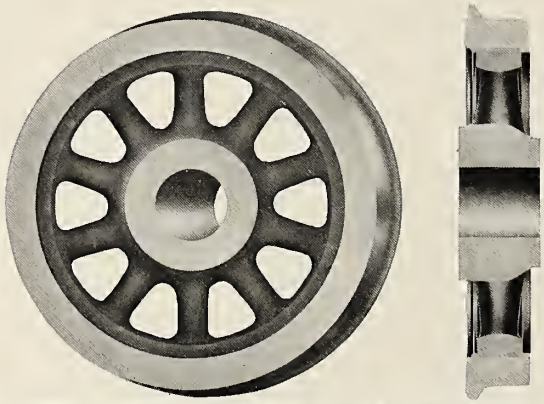

Fig. 2030—Engine Truck Wheel with Cast Iron or Cast Steel Spoke Center Held by Shrinkage and Gibson Retaining Ring.

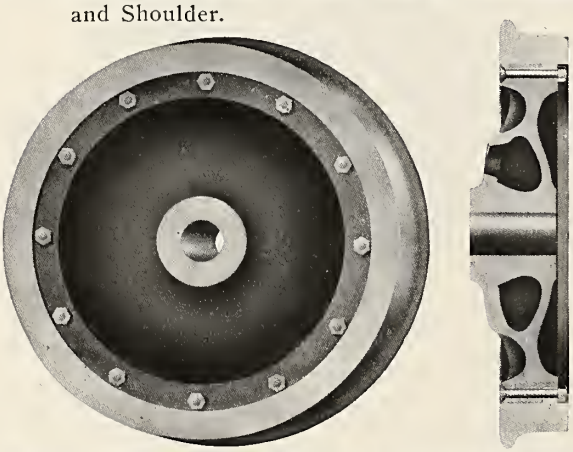

Fig. 2031—Tender Truck Wheel with Cast Iron Plate Center Held by Shrinkage and Bolts.

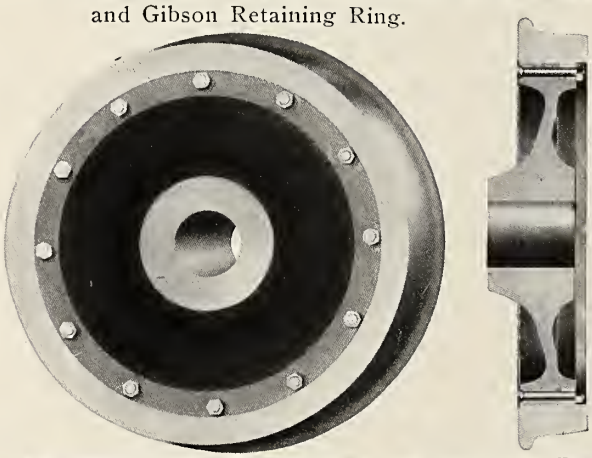

Fig. 2032—Tender Truck Wheel with Cast Steel Plate Center Held by Shrinkage and Bolts.

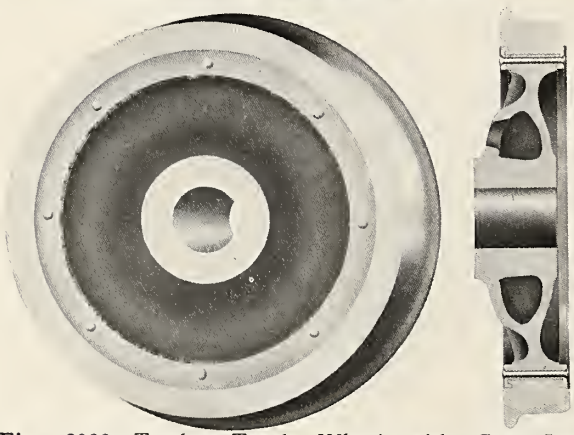

Fig. 2033—Tender Truck Wheel with Cast Iron Plate Center Held by Shrinkage, Double Lip Retaining Rings and Rivets.

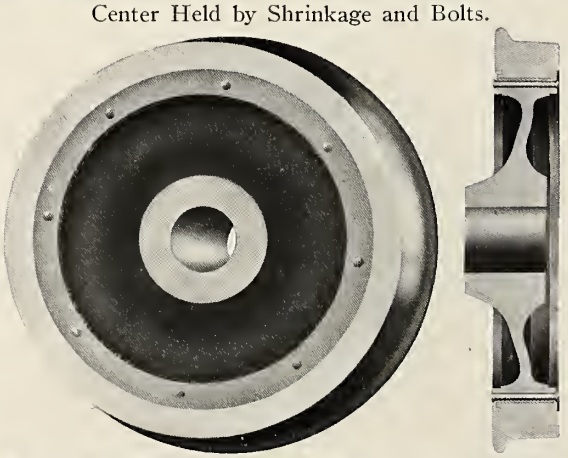

Fig. 2034—Tender Truck Wheel with Cast Steel Plate Center Held by Shrinkage, Double Lip Retaining Rings and Rivets.

Standard Steel Works Company.

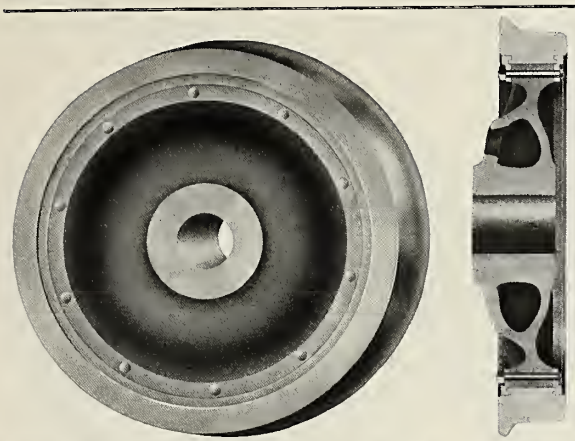

Fig. 2035—Tender Truck Wheel with Cast Iron Plate Center Held by Shrinkage Mansell Retaining Rings and Bolts.

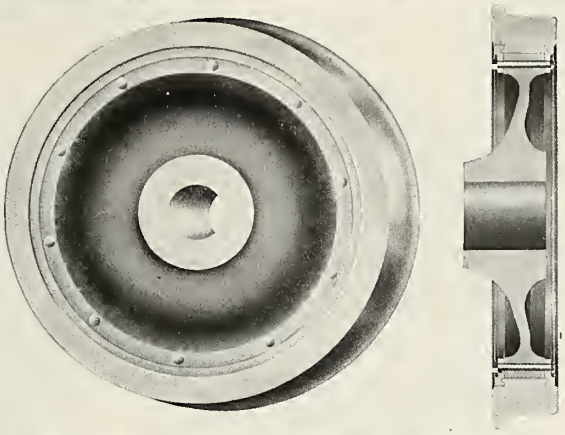

Fig. 2036—Tender Truck Wheel with Cast Steel Plate Center Held by Shrinkage Mansell Retaining Rings and Bolts.

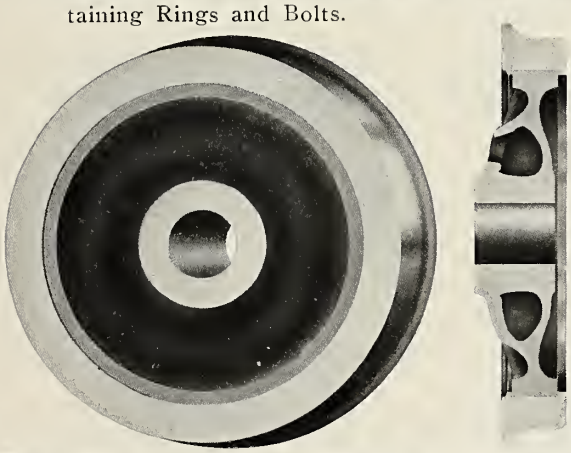

Fig. 2037—Tender Truck Wheel with Cast Iron Plate Center Held by Shrinkage and Gibson Retaining Ring.

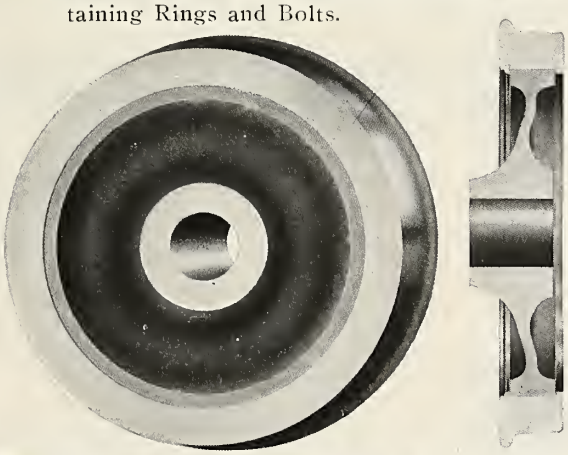

Fig. 2038—Tender Truck Wheel with Cast Steel Plate Center Held by Shrinkage and Gibson Retaining Ring.

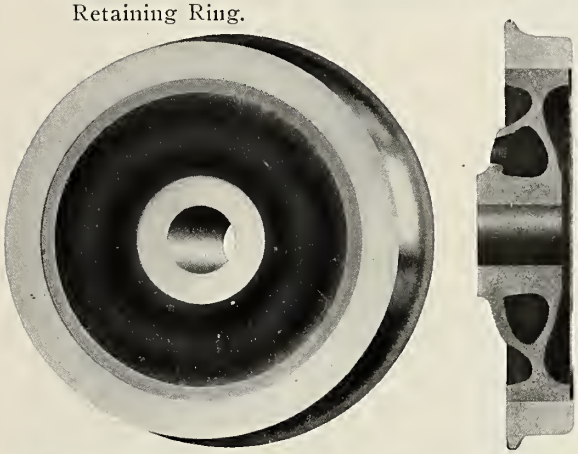

Fig. 2039—Tender Wheel with Iron or Steel Cast Plate Center Held by Shrinkage and Shoulder.

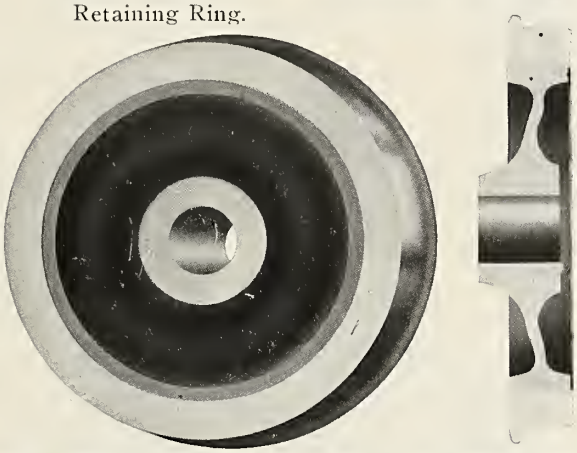

Fig. 2040—Tender Wheel with Cast Steel Plate Center Held by Shrinkage and Shoulder.

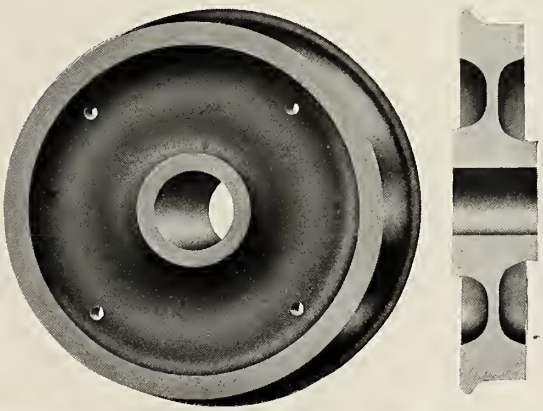

Fig. 2041—Solid Rolled Steel Wheel for Engine Trucks.

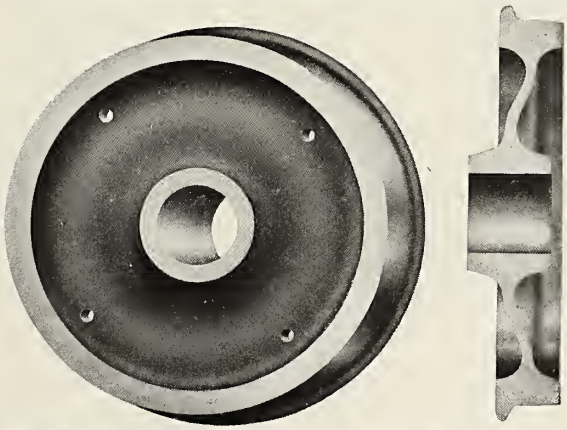

Fig. 2042—Solid Rolled Steel Wheel for Tender Trucks.

Standard Steel Works Company.

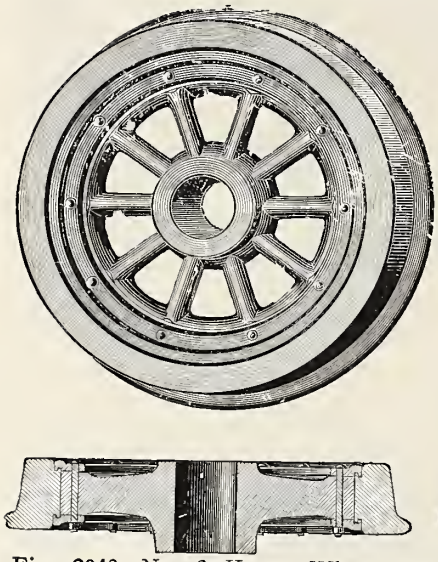

Fig. 2043—No. 3 Krupp Wheel with Cast Iron Spoke Center and Tire Secured by Wrought Iron Retaining Rings.

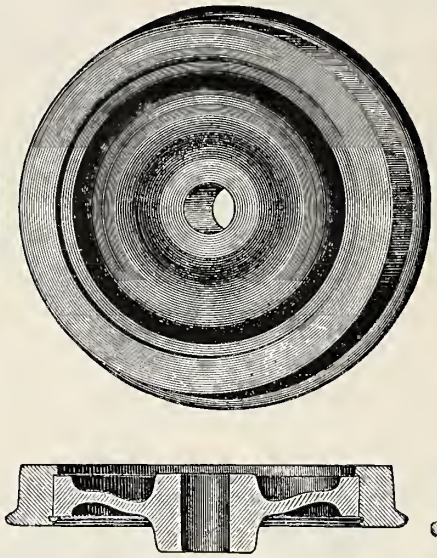

Fig. 2044—No. 14 Krupp Wheel with Disc Center and Steel Tire Secured with Bute Fastening.

Thomas Prosser & Son.

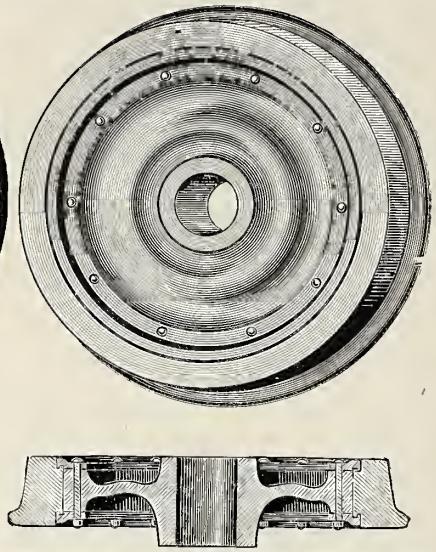

Fig. 2045—No. 1 Krupp Wheel with Forged Steel Disc Center and Tire Secured by Wrought Iron Retaining Rings.

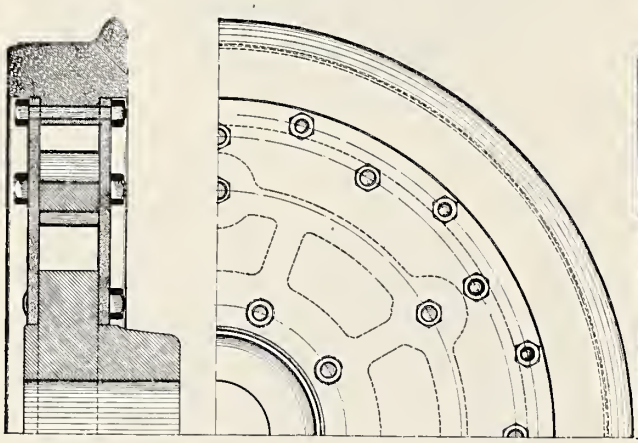

Fig. 2046—Paige Plate Tender Truck Wheel.

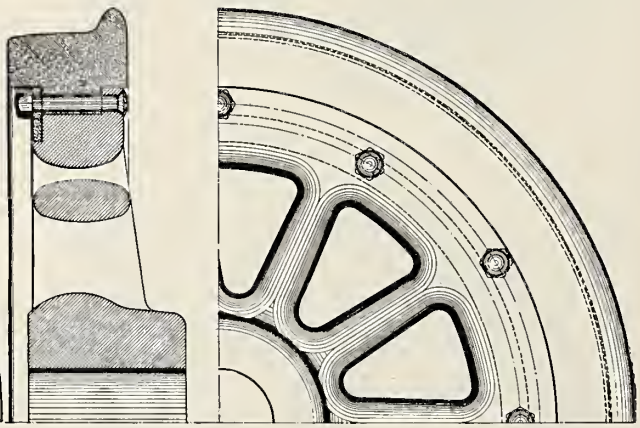

Fig. 2047—Paige Spoke Tender Truck Wheel.

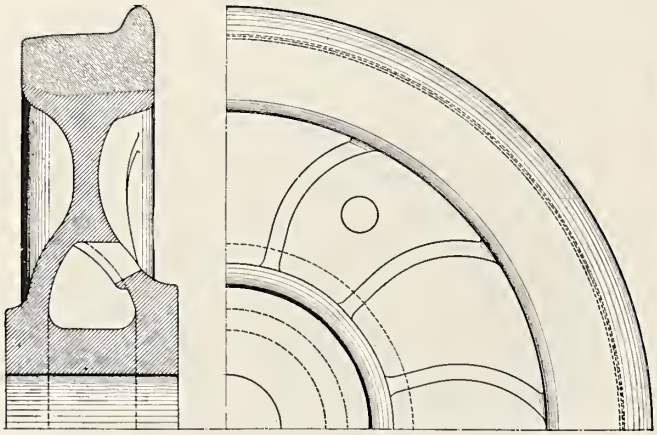

Fig. 2048—McKee & Fuller Double Plate Engine Truck Wheel.

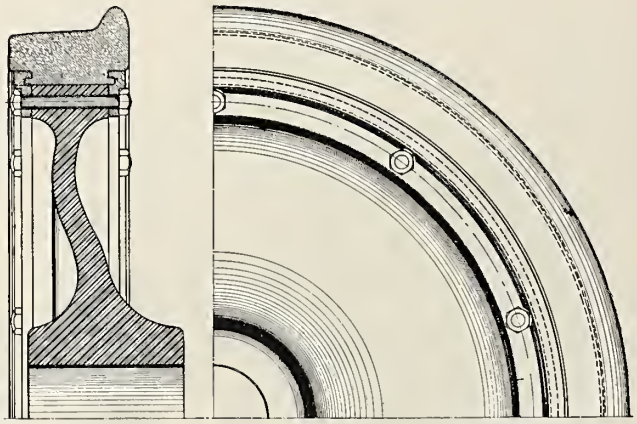

Fig. 2049—National No. 6 Tender Truck Wheel.

The Railway Steel Spring Company.

Fig. 2050—Griffin F. C. S. Tender Truck Wheel, Back; Griffin Wheel Company.

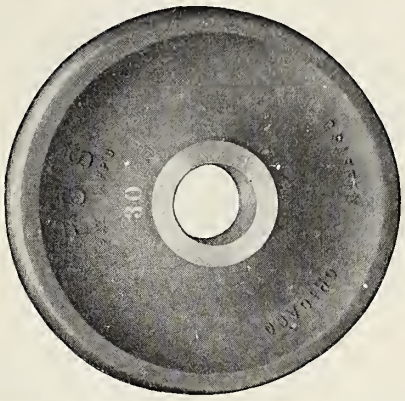

Fig. 2051—Griffin F. C. S. Tender Truck Wheel, Front; Griffin Wheel Company.

Recommended Weights of F. C. S. Wheels For Engine Truck and Tender Service:—Griffin Wheel Company.

WEIGHT OF ENGINE TENDER WHEELS

Tank Capacity Gal.	Weight of Tender Lb.	Total Load Lb.	F. C. S. Wheels Recommended Weights 33 in.	36 in.	Size of Journal
5,000	35,000	100,000	690 lb.	800 lb.	4¼ in. x 8 in.
6,000	42,000	120,000	740 lb.	840 lb.	5 in. x 9 in.
7,000	49,000	140,000	740 lb.	840 lb.	5 in. x 9 in.
8,000	56,000	160,000	840 lb.	940 lb.	5½ in. x 10 in.
9,000	63,000	180,000	840 lb.	940 lb.	5½ in. x 10 in.
10,000	70,000	200,000	940 lb.	1,040 lb.	6 in. x 11 in.
12,000	75,000	220,000	940 lb.	1,040 lb.	6½ in. x 11 in.
14,000	80,000	240,000	940 lb.	1,040 lb.	6½ in. x 11 in.

WEIGHT OF ENGINE TRUCK WHEELS.

Diameter of Wheel	For less than 6,000 lb. Flange Pressure	For 6,000 lb. to 12,000 lb. Flange Pressure	For 12,000 lb. to 15,000 lb. Flange Pressure
24 in.	410 lb.	450 lb.	480 lb.
26 in.	460 lb.	500 lb.	535 lb.
28 in.	525 lb.	560 lb.	610 lb.
30 in.	600 lb.	660 lb.	725 lb.
33 in.	675 lb.	760 lb.	840 lb.

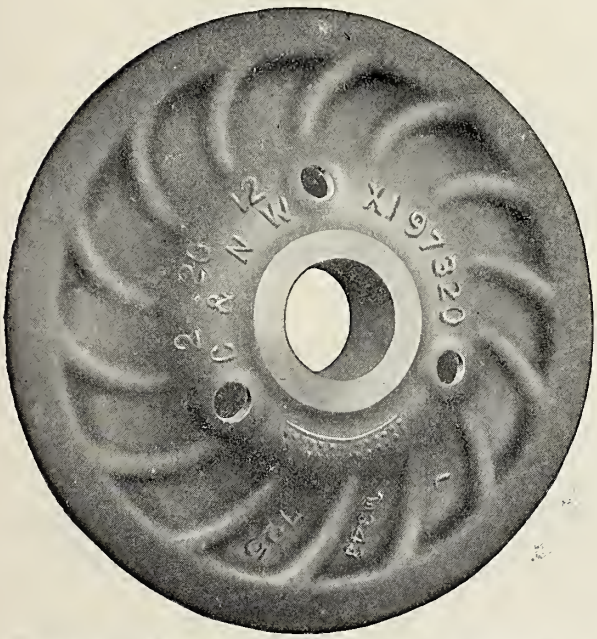

Fig. 2052—Chilled Iron Wheel, Back; Association of Manufacturers of Chilled Car Wheels.

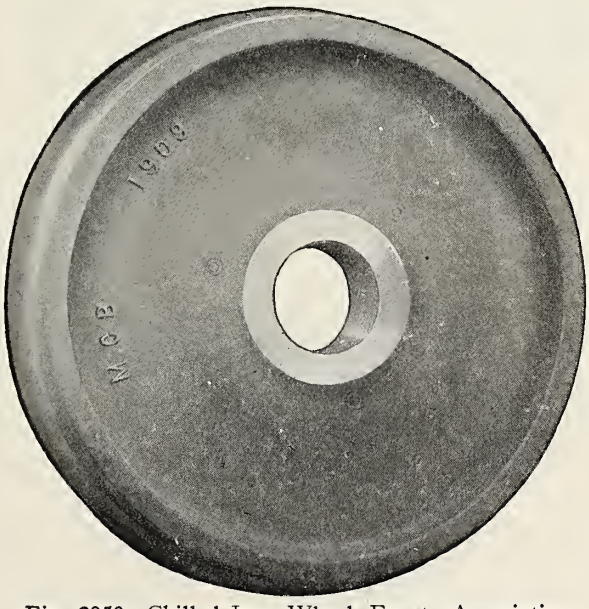

Fig. 2053—Chilled Iron Wheel, Front; Association of Manufacturers of Chilled Car Wheels.

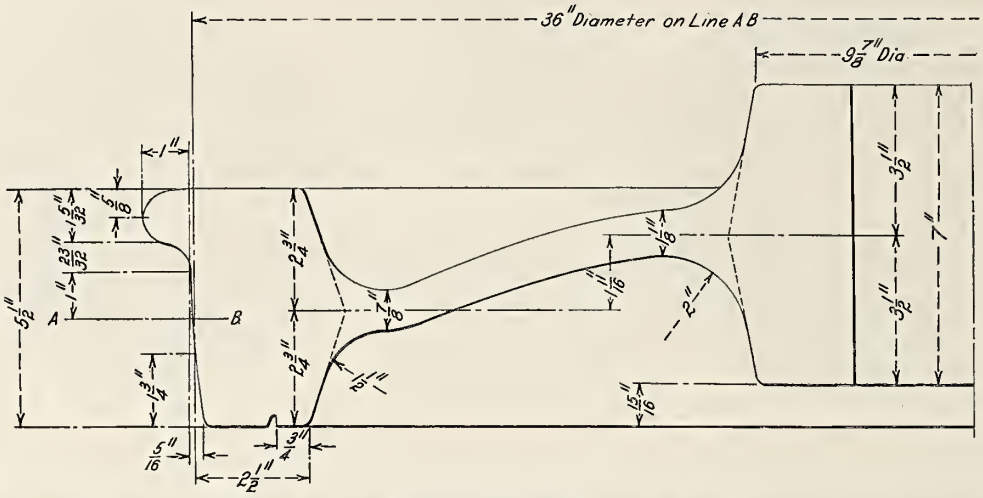

Fig. 2054—Schoen Steel 36 in. M. C. B. Standard Tender Truck Wheel; Carnegie Steel Company.

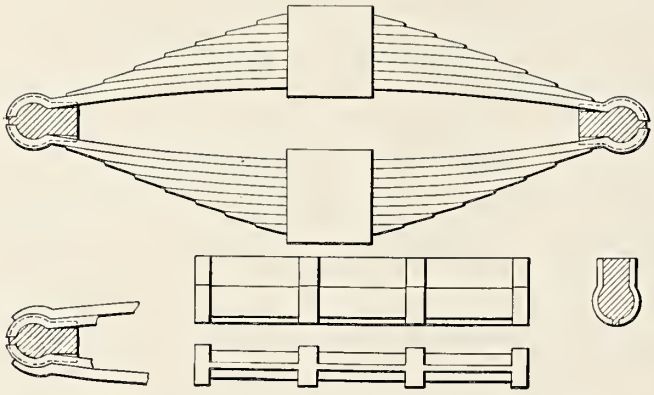

Fig. 2055—Elliptic Truck Spring; Union Spring & Manufacturing Company.

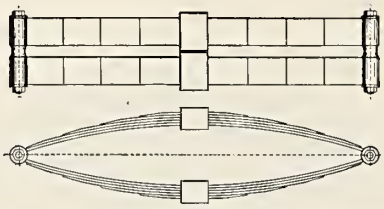

Fig. 2056—Double Elliptic Truck Spring.

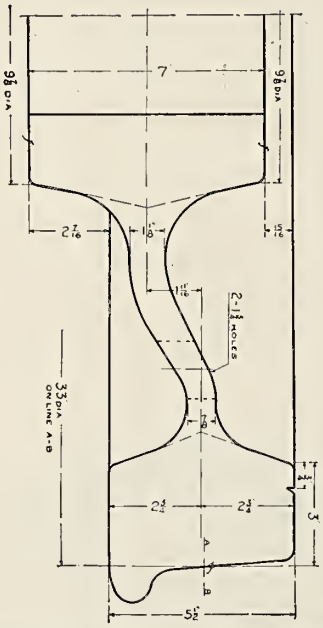

Fig. 2057—Rolled Steel Tender Truck Wheel, 33 in. Diameter; Midvale Steel Company.

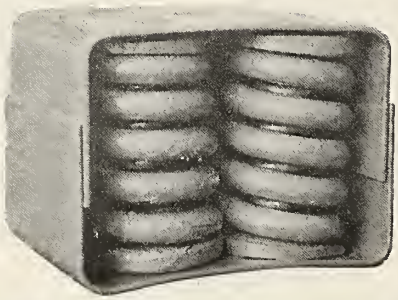

Fig. 2058—American Controller Spring; American Steel Foundries.

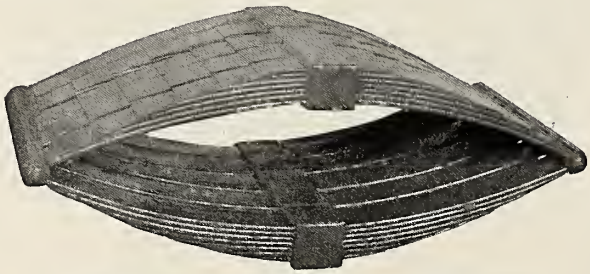

Fig. 2059—Quintuple Elliptic Truck Spring; American Steel Foundries.

Fig. 2060—Four Coil Bolster Spring.

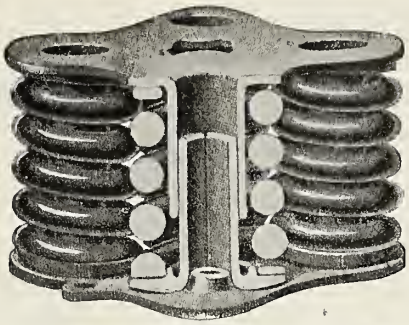

Fig. 2061—McCord Spring Dampener; McCord & Company.

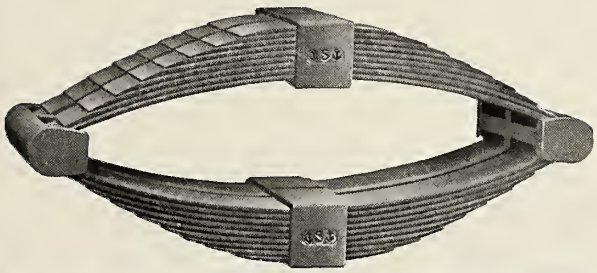

Fig. 2062—Double Full Elliptic Tender Truck Spring; Standard Steel Works Company.

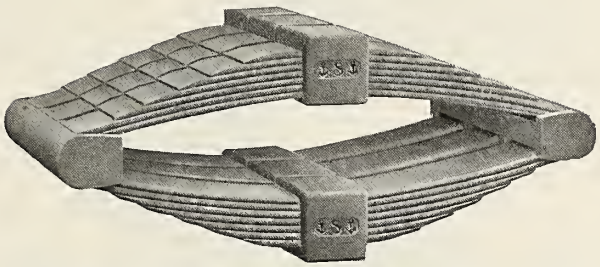

Fig. 2063—Triple Full Elliptic Tender Truck Spring; Standard Steel Works Company.

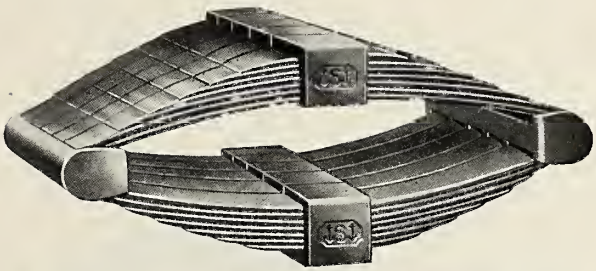

Fig. 2064—Quintuple Full Elliptic Tender Truck Spring; Standard Steel Works Company.

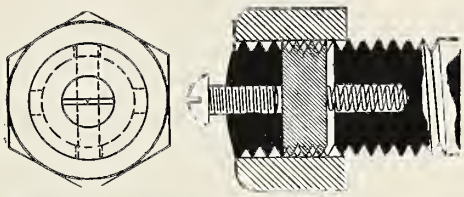

Fig. 2065—Positive Nut Lock; Schum Brothers.

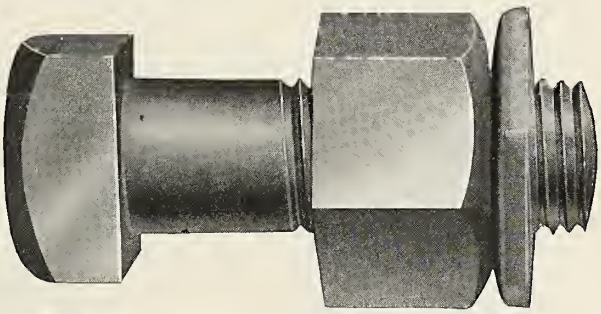

Fig. 2067—K-P Nut Lock; Waugh Draft Gear Company.

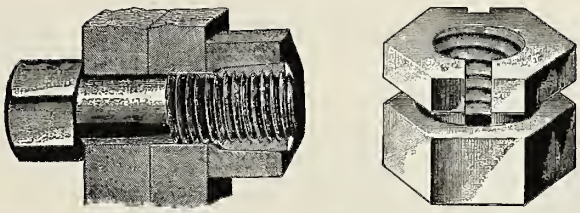

Fig. 2066—Columbia Lock Nut; Columbia Nut & Bolt Company.

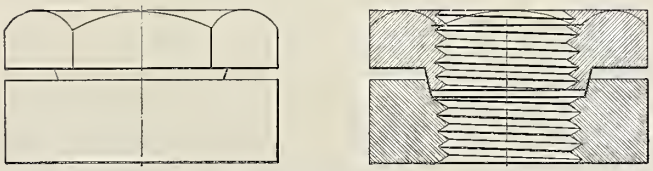

Fig. 2068—McLaughlin Lock Nut; Franklin Railway Supply Company.

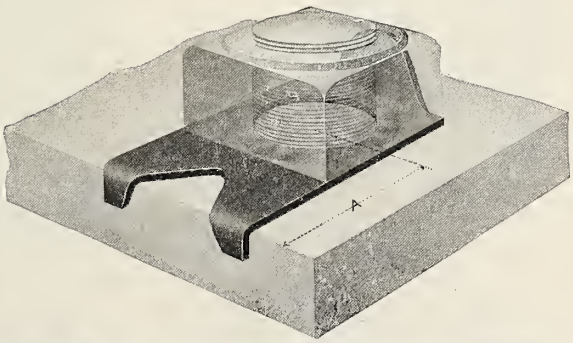

Fig. 2069—F. B. C. Arch Bar Nut Lock: Keystone Nut Lock Manufacturing Company.

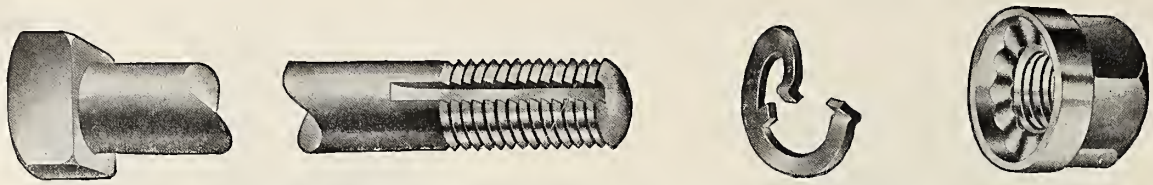

Fig. 2070—O. K. Nut Lock; The O. K. Nut Lock Company.

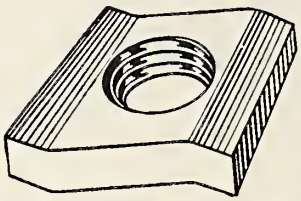

Fig. 2071—Gib Nut; Columbia Nut & Bolt Company.

Fig. 2072—Lock Nuts; Boss Nut Company.

Fig. 2073—Absolute Lock Nut; American Lock-Nut Company.

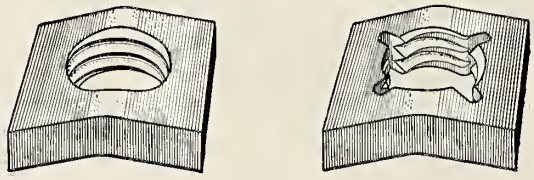

Fig. 2074—Toggle Lock Nuts; Jones Positive Nut Lock Company.

Fig. 2075—Bartley Multiple Fastener; American Nut & Bolt Fastener Company.

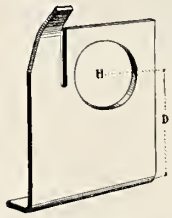

Fig. 2076 — Bartley Flange Fastener; American Nut & Bolt Fastener Company.

Fig. 2077—Nut Lock Washer; National Lock Washer Company.

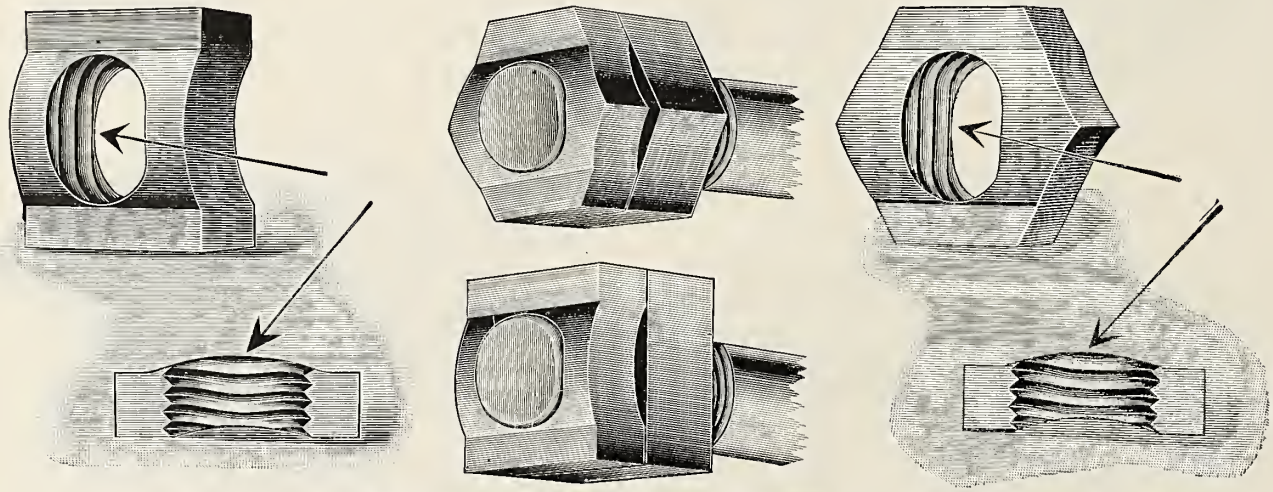

Fig. 2078—Grip Nuts; Grip Nut Company.

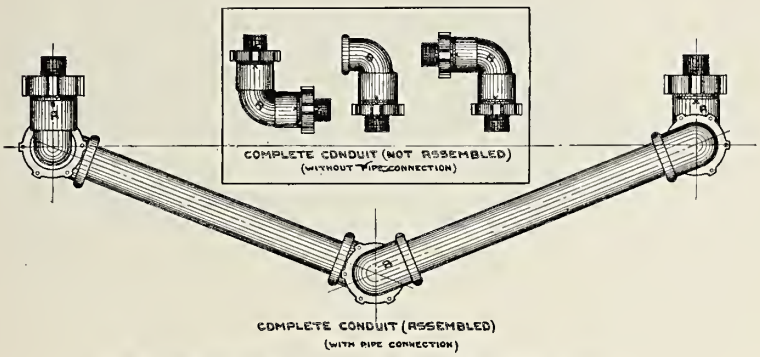

Fig. 2079—McLaughlin Flexible Metallic Joint; Franklin Railway Supply Company.

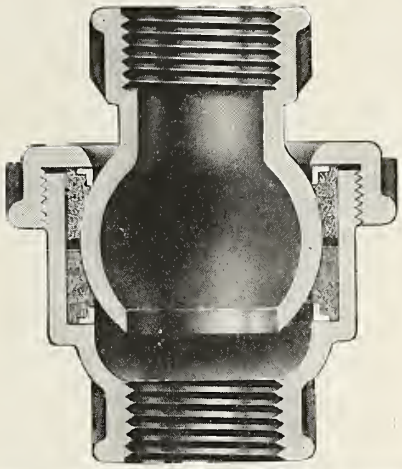

Fig. 2080—Barco Flexible Metallic Joint; Barco Brass & Joint Company.

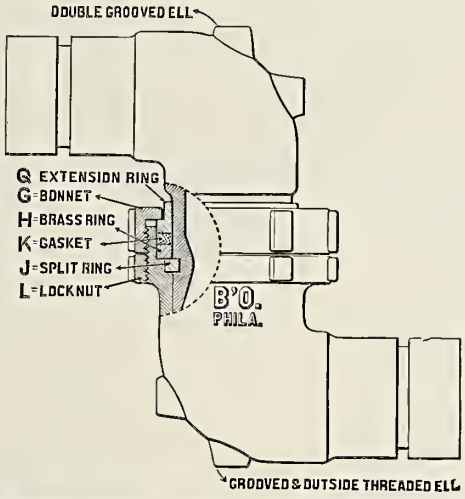

Fig. 2081—Bordo Swing Joint and Parts; L. J. Bordo Company.

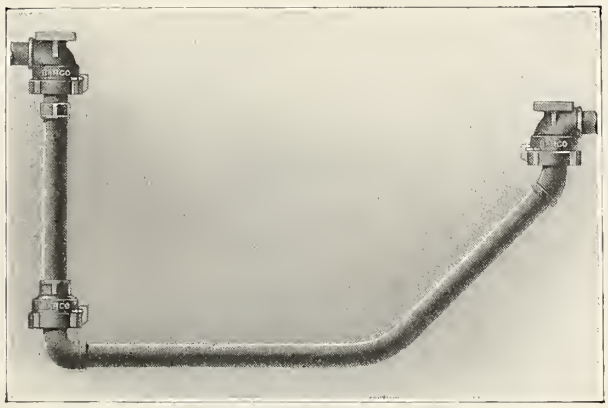

Fig. 2082—Barco Engine-Tender Connection; Barco Brass & Joint Company.

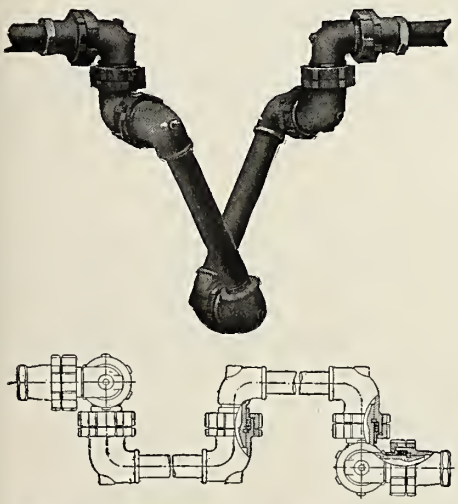

Fig. 2083—Bordo Air and Oil Connection Between Engine and Tender; L. J. Bordo Company.

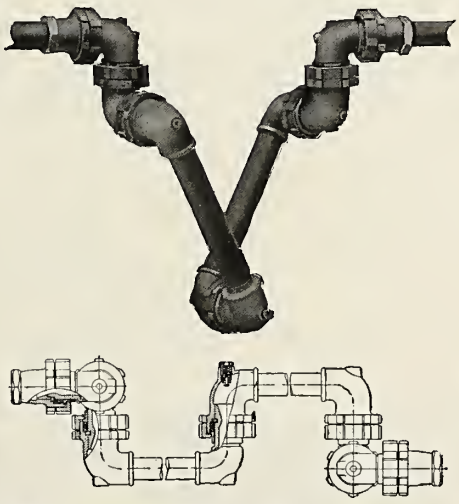

Fig. 2084—Bordo Steam Heat Connection Between Engine and Tender with Automatic Drain Valve; L. J. Bordo Company.

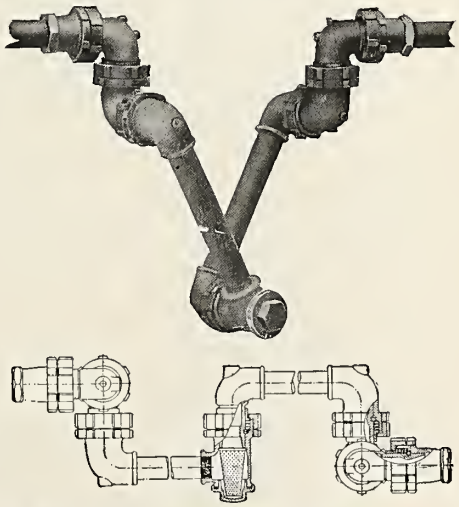

Fig. 2085—Water Connection Between Engine and Tender with Strainer Dispensing with Rubber Tank Hose; L. J. Bordo Company.

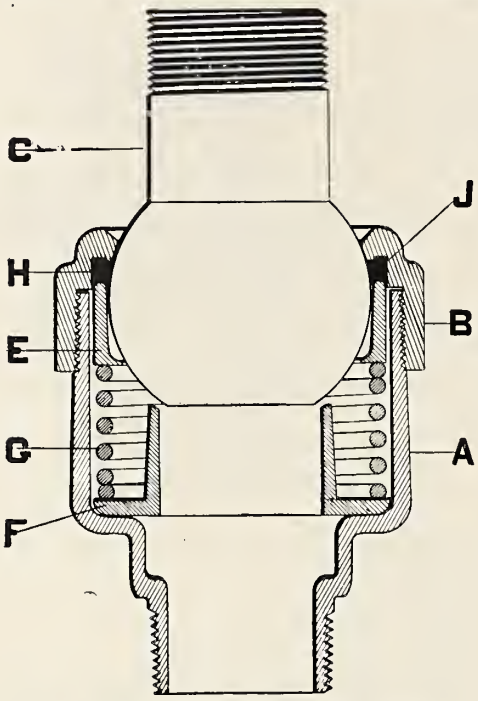

Fig. 2086—Greenlaw Flexible Metallic Joint; Greenlaw Manufacturing Company.

Names of Parts of Fig. 2086.

A *Cylinder Nipple*
B *Nut*
C *Ball*
E *Follower*
F *Ball Stop*
G *Spring*
H *Packing*
J *Packing Recess*

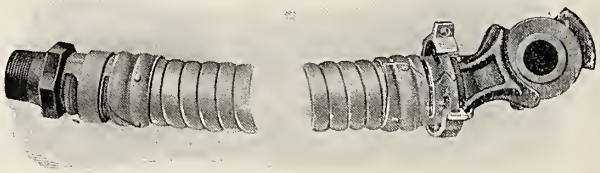

Fig. 2087—Sprague Flexible Armored Hose; Sprague Electric Company.

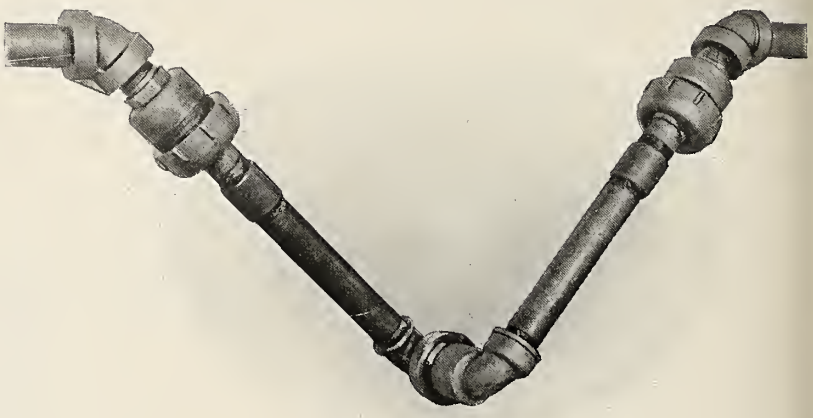

Fig. 2088—Three Joint Engine-Tender Steam Connection; Greenlaw Manufacturing Company.

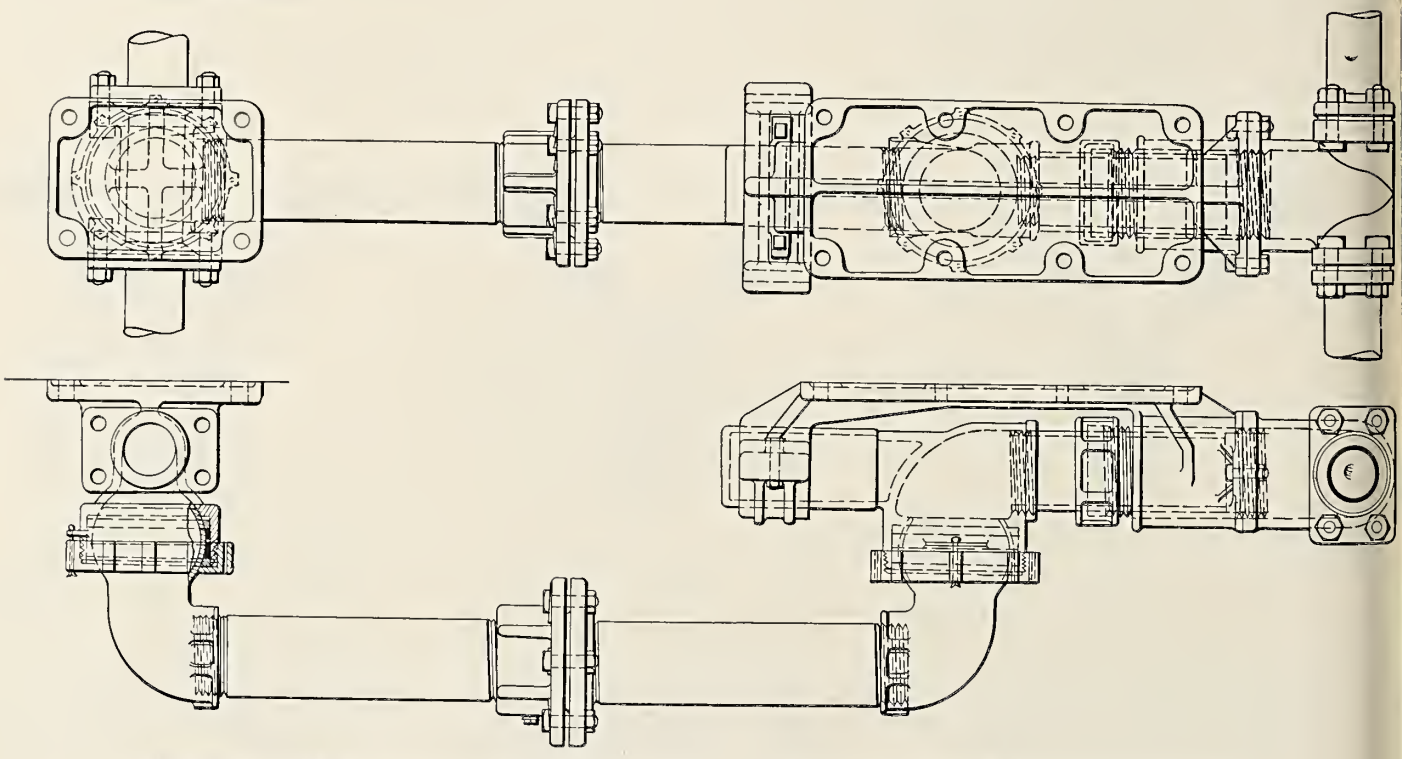

Fig. 2089—Single Water Joint for Use Between Engine and Tender; Franklin Railway Supply Company.

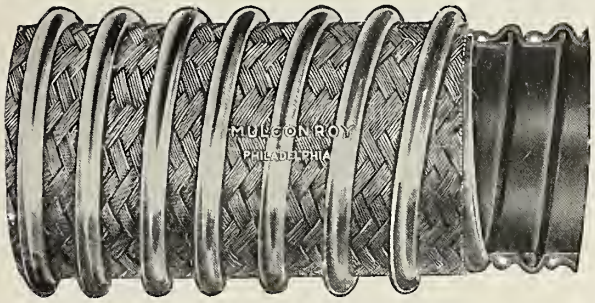

Fig. 2090—Flexible All-Metal Hose; Mulconroy Company.

Fig. 2091—American Metal Hose; American Metal Hose Company.

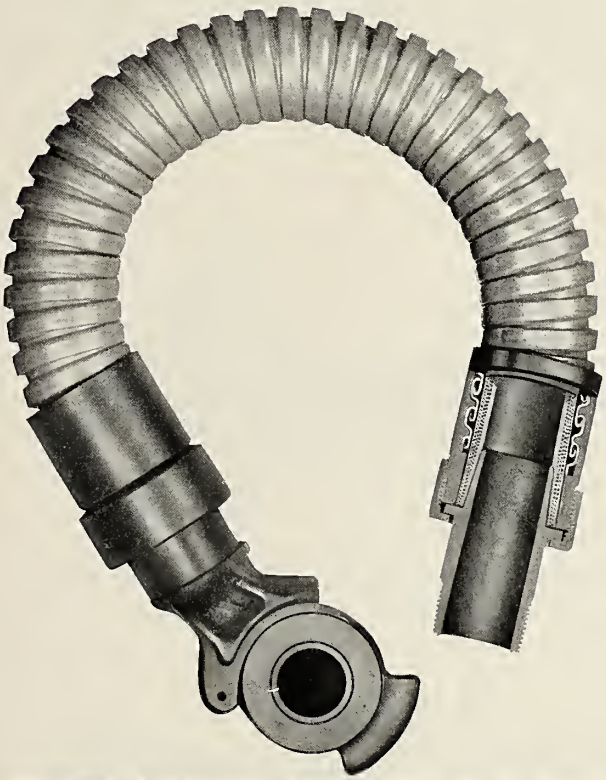

Fig. 2092—J-M Flexible Armored Hose; H. W. Johns-Manville Company.

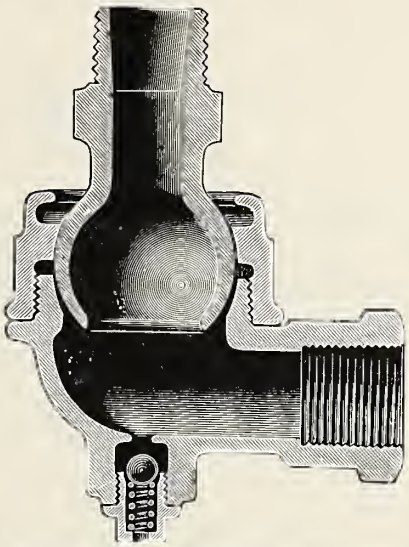

Fig. 2093—Moran Flexible Metallic Joint; Moran Flexible Steam Joint Company.

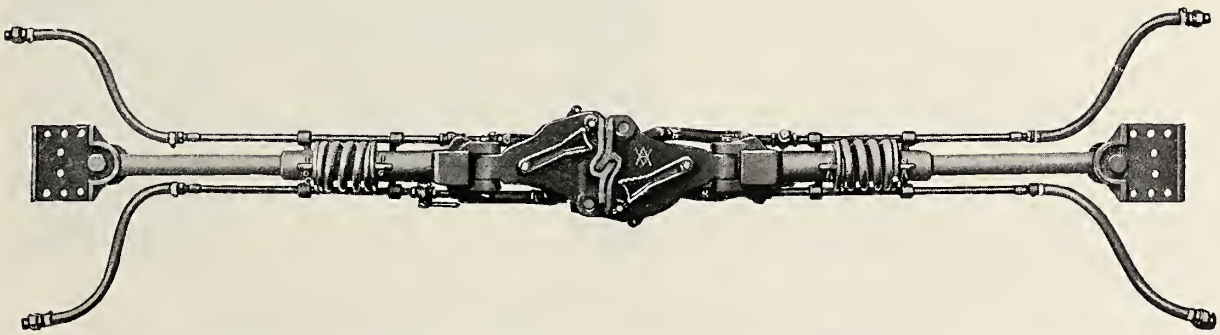

Fig. 2094—Westinghouse Automatic Car and Air Coupler, Type C-3-A; Westinghouse Air Brake Company.

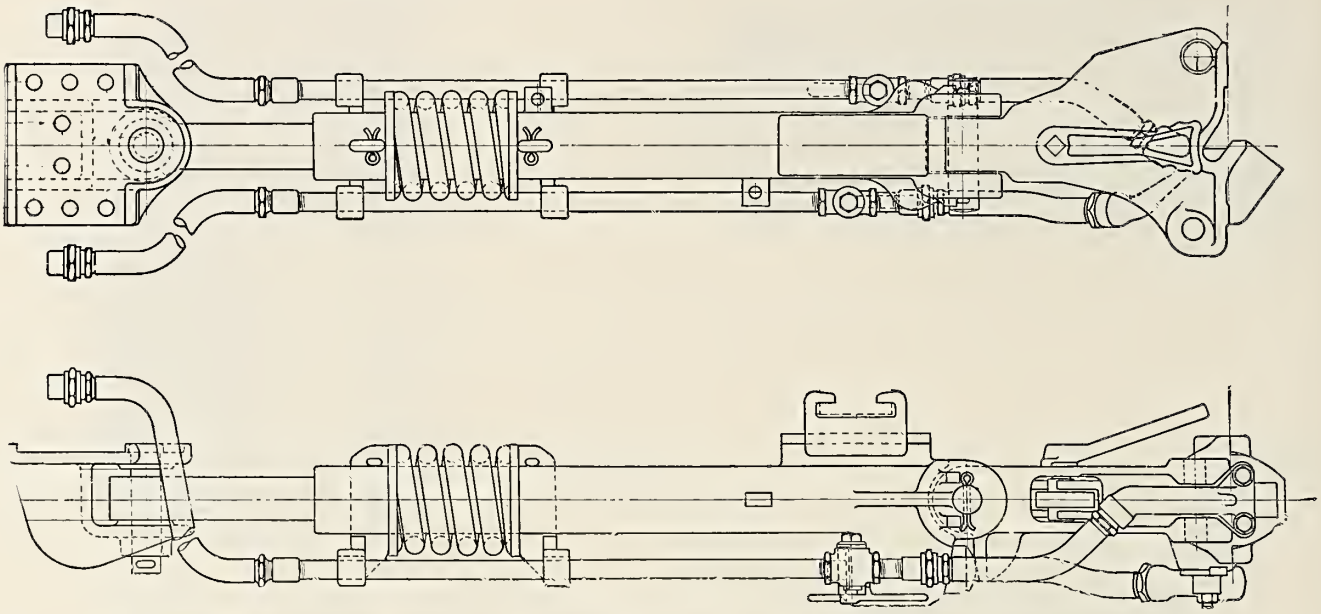

Fig. 2095—Westinghouse Automatic Connector, Type C-3-A; Westinghouse Air Brake Company.

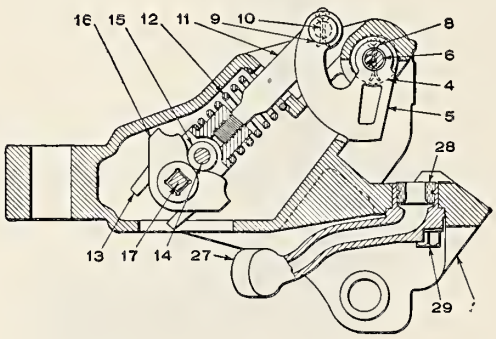

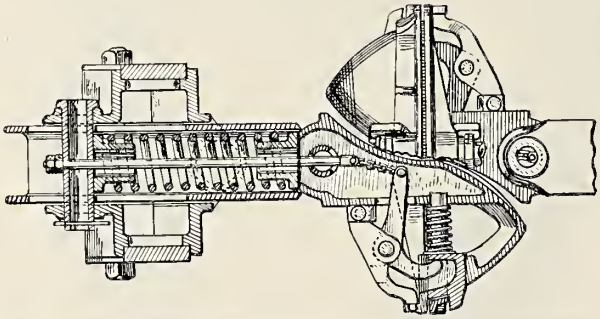

Fig. 2097—Durbin Automatic Connector; Durbin Automatic Train Pipe Connector Company.

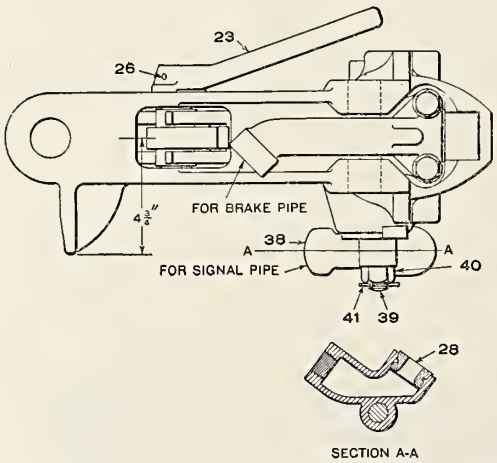

Fig. 2096—Westinghouse Automatic Car and Air Coupler; Westinghouse Air Brake Company.

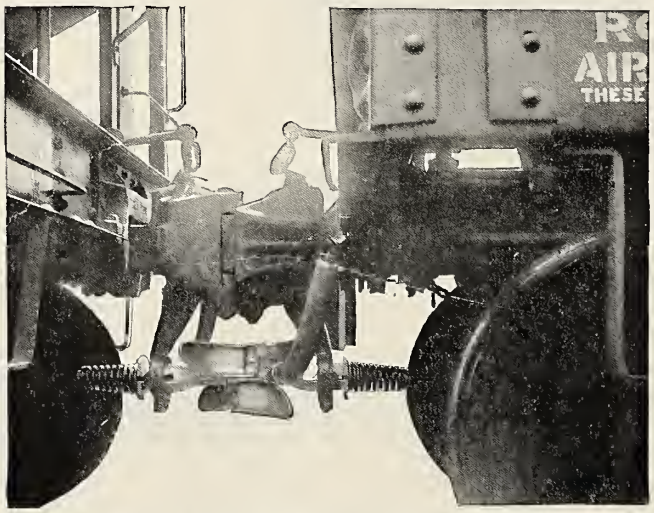

Fig. 2098—Robinson Automatic Connector; Robinson Connector Company.

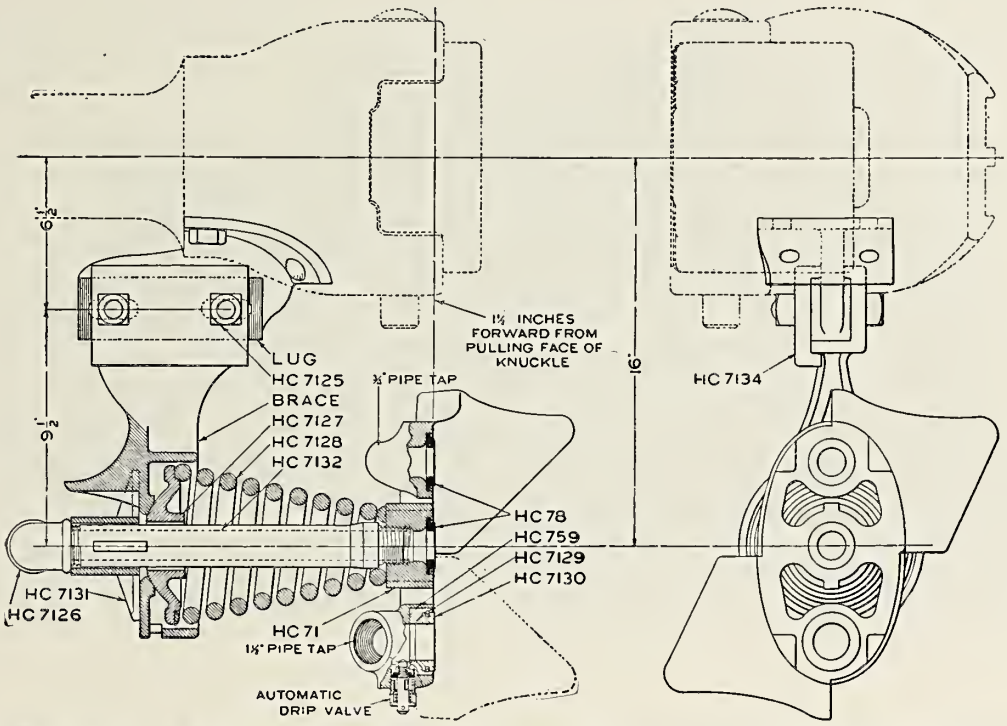

Fig. 2099—New York Passenger Connector with Lug and Brace; New York Air Brake Company.

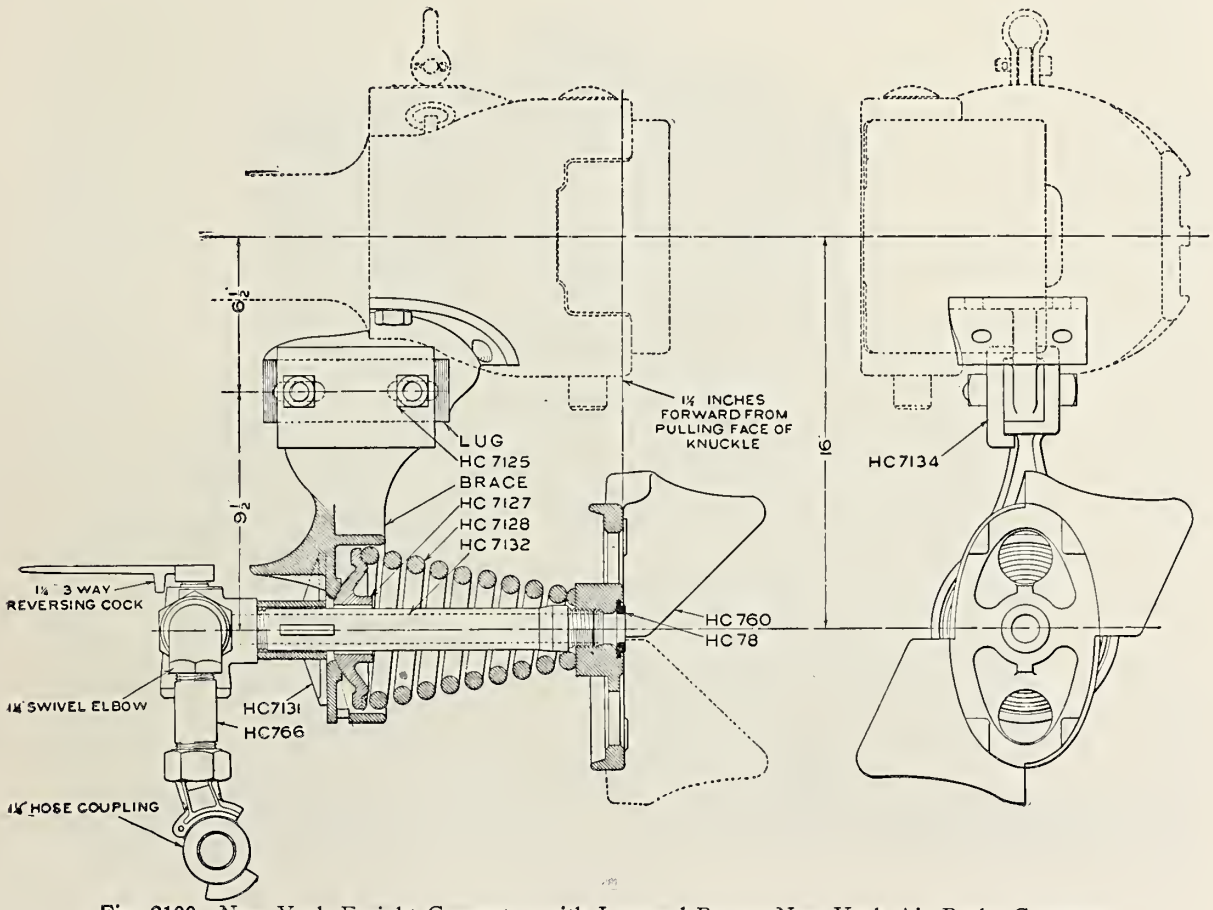

Fig. 2100—New York Freight Connector with Lug and Brace; New York Air Brake Company.

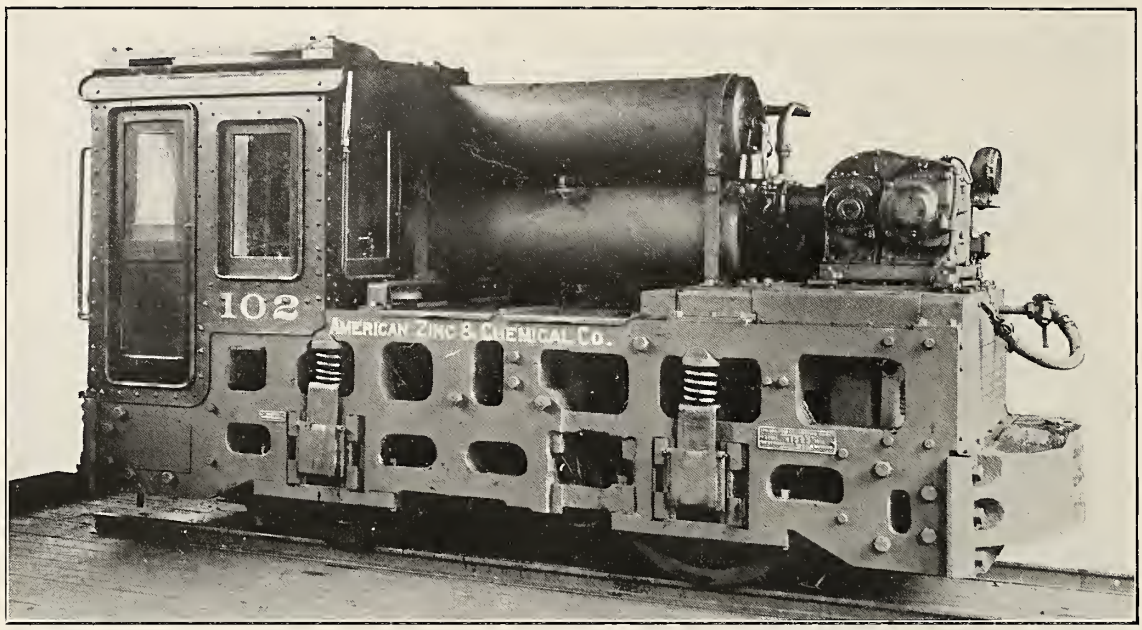

Fig. 2101—Baldwin-Westinghouse Electric Industrial Locomotive Built for the American Zinc & Chemical Company. Two Motors; Voltage, 250. Weight, 24,000 lbs.

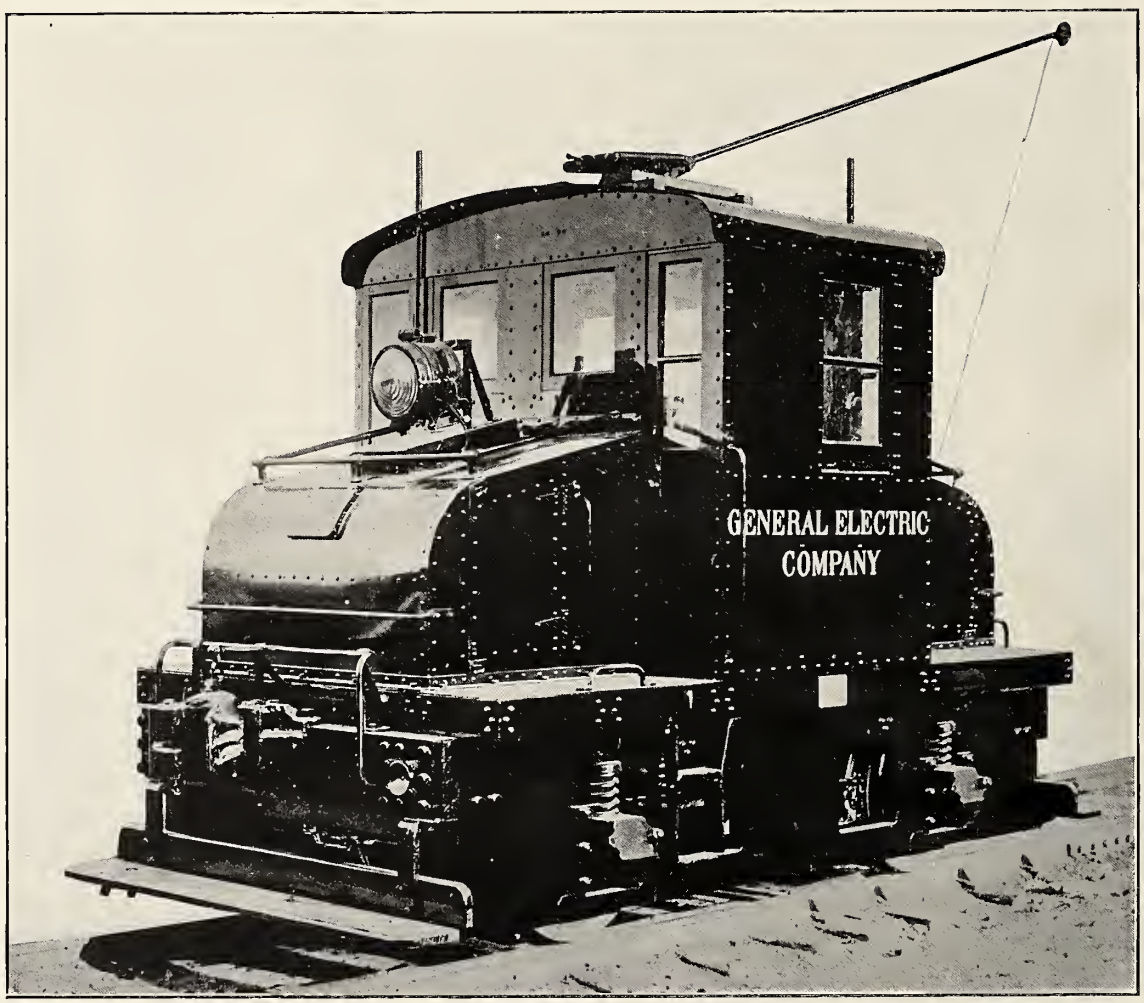

Fig. 2102—Electric Industrial Locomotive. Type LS-2E16-A. Built by the General Electric Company.

Fig. 2103—Baldwin-Westinghouse 11,000 Volt Alternating Current Switching Locomotive Built for the New York, Westchester & Boston. Four Motors, Type 410; Voltage, 190; H. P., 110; Cycles, 25; Single Phase. Unit Switch Control. Diameter of Drivers, 63 in. Gear Ratio, 17 to 101. Tractive Effort, 39,500 lbs. Drawbar Pull at 7 M. P. H., 34,415 lbs. Weight, 80 Tons.

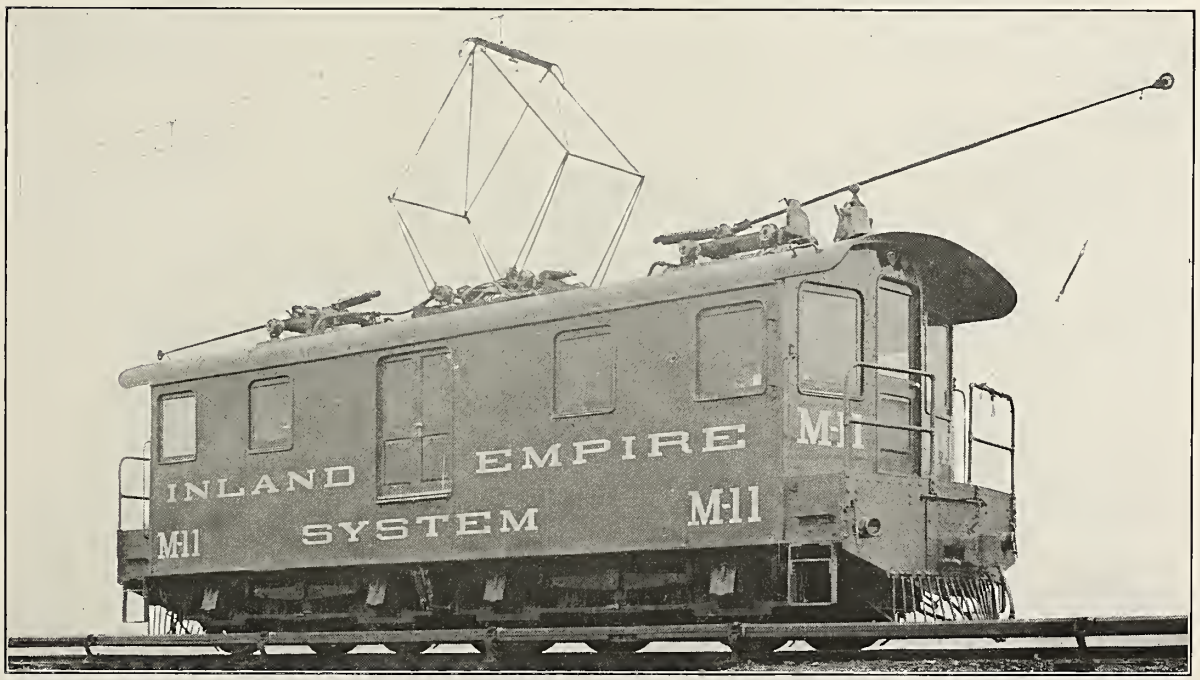

Fig. 2104—Baldwin-Westinghouse 6,600 Volt A. C.—550 Volt D. C. Locomotive Built for the Spokane & Inland. Four Motors, Type 151; Voltage, 220; H. P., 180; Cycles, 25; Single Phase. Unit Switch Control. Diameter of Wheels, 50 in. Gear Ratio, 17 to 79. Tractive Effort, 36,125 lbs. Drawbar Pull at 10½ M. P. H., 24,500 lbs. Weight, 72¼ Tons.

Fig. 2105—Electric Locomotive Type 404-E-70-4GE5 7-250V. Built for the Harlan & Hollingsworth Corporation by the General Electric and American Locomotive Companies.

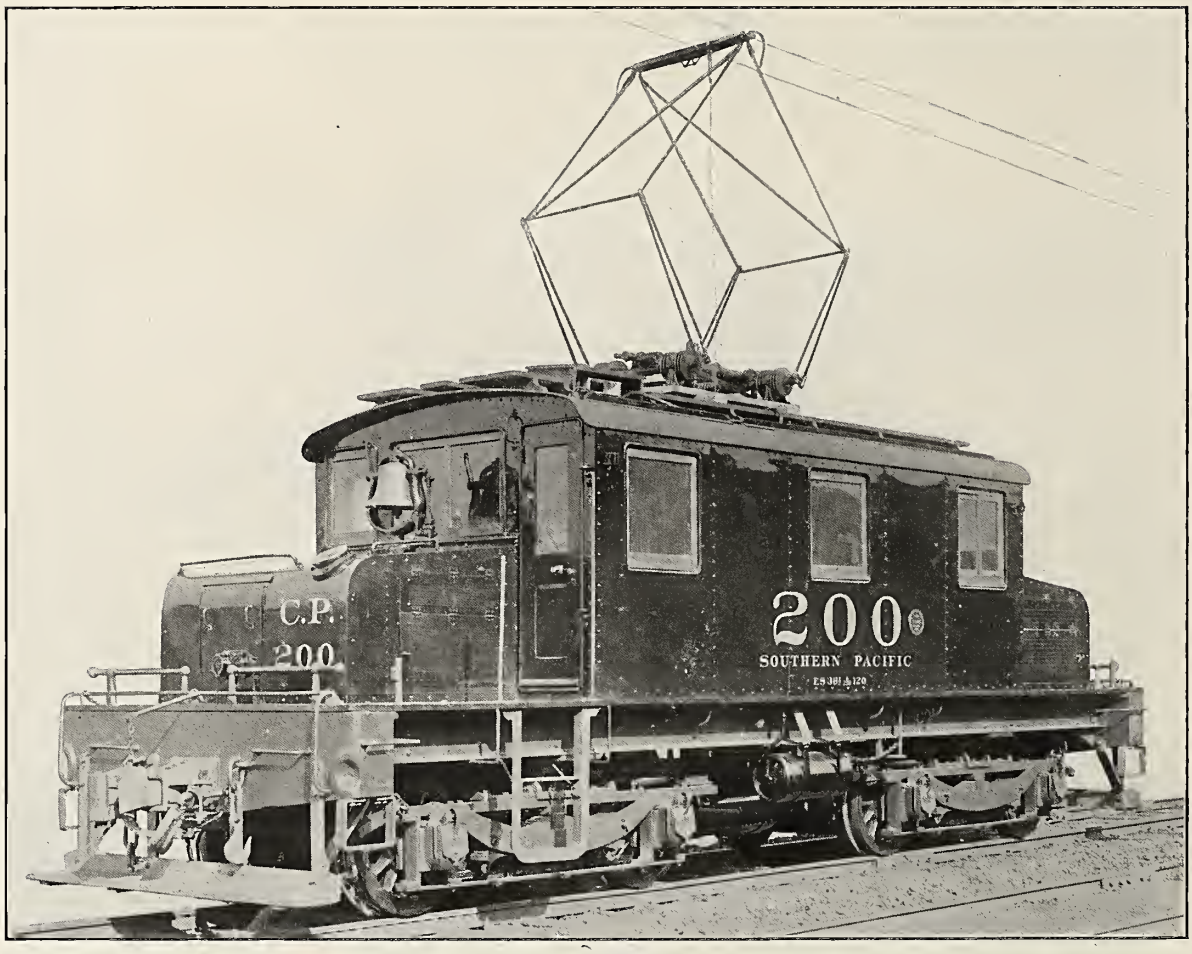

Fig. 2106—Baldwin-Westinghouse Electric Locomotive Built for the Southern Pacific. Voltage, 600-1,200. Weight, 120,000 lb.

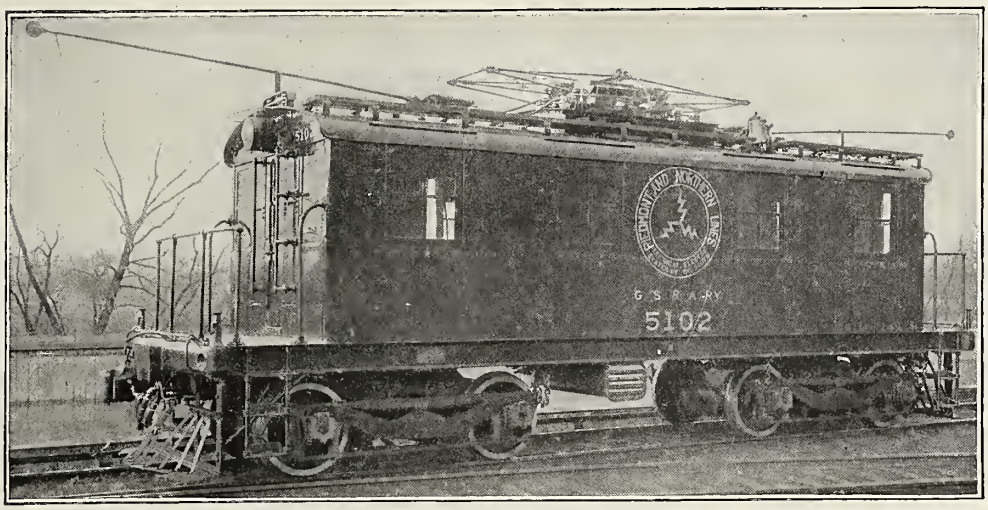

Fig. 2107—Electric Locomotive Type 404-E-120-4GE212-1500V. Built for the Piedmont & Northern by the General Electric and Wason Manufacturing Companies.

Fig. 2108—Gas-Electric Locomotive Built for the Minnesota Northwestern Electric Railroad by the General Electric Company.

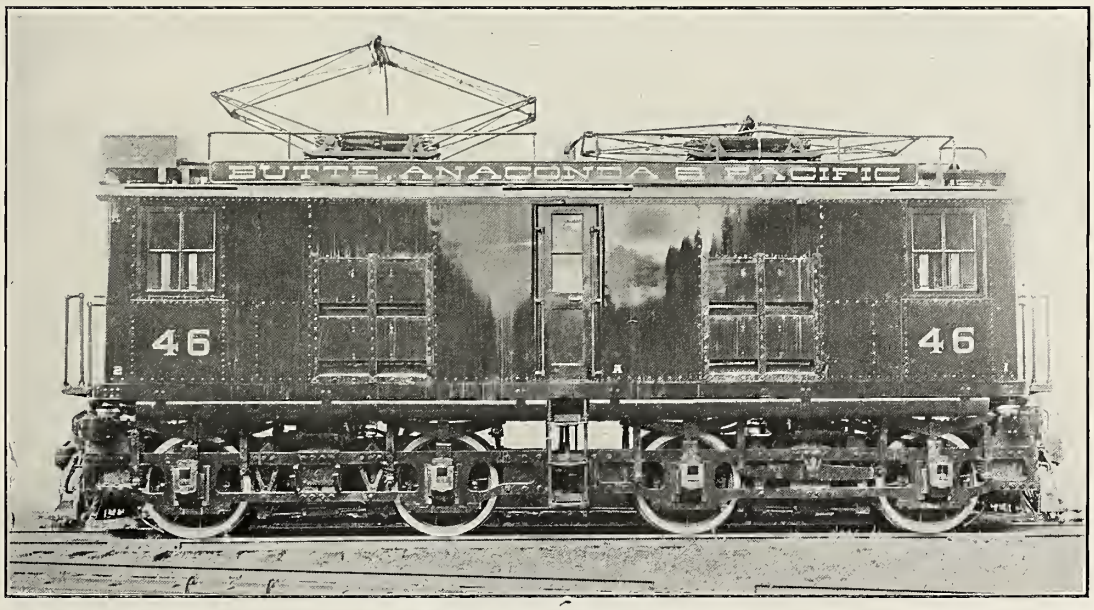

Fig. 2109—Electric Locomotive Type 0440-E-162-4GE229-2400V. Built for the Butte, Anaconda & Pacific by the General Electric and American Locomotive Companies.

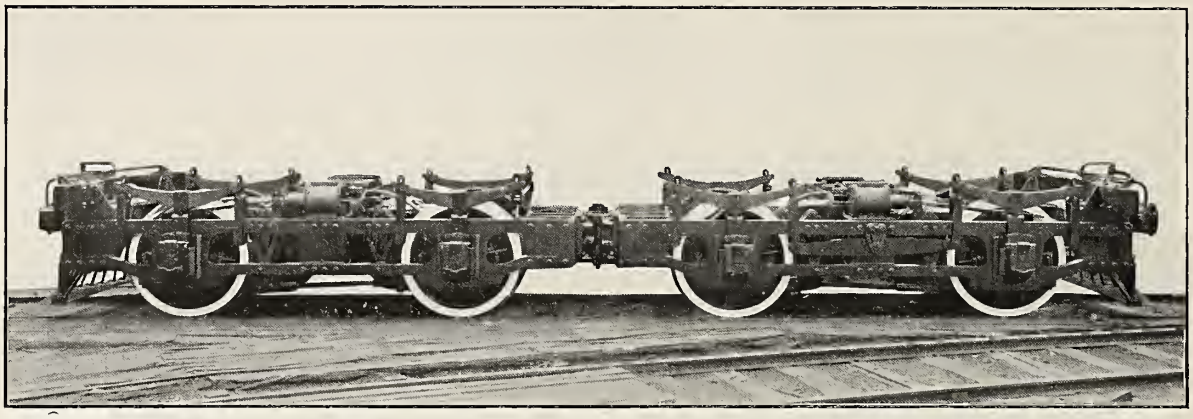

Fig. 2110—Trucks for Electric Locomotive Type 0440-E-162-4GE229-2400V. Built for the Butte, Anaconda & Pacific by the General Electric and American Locomotive Companies.

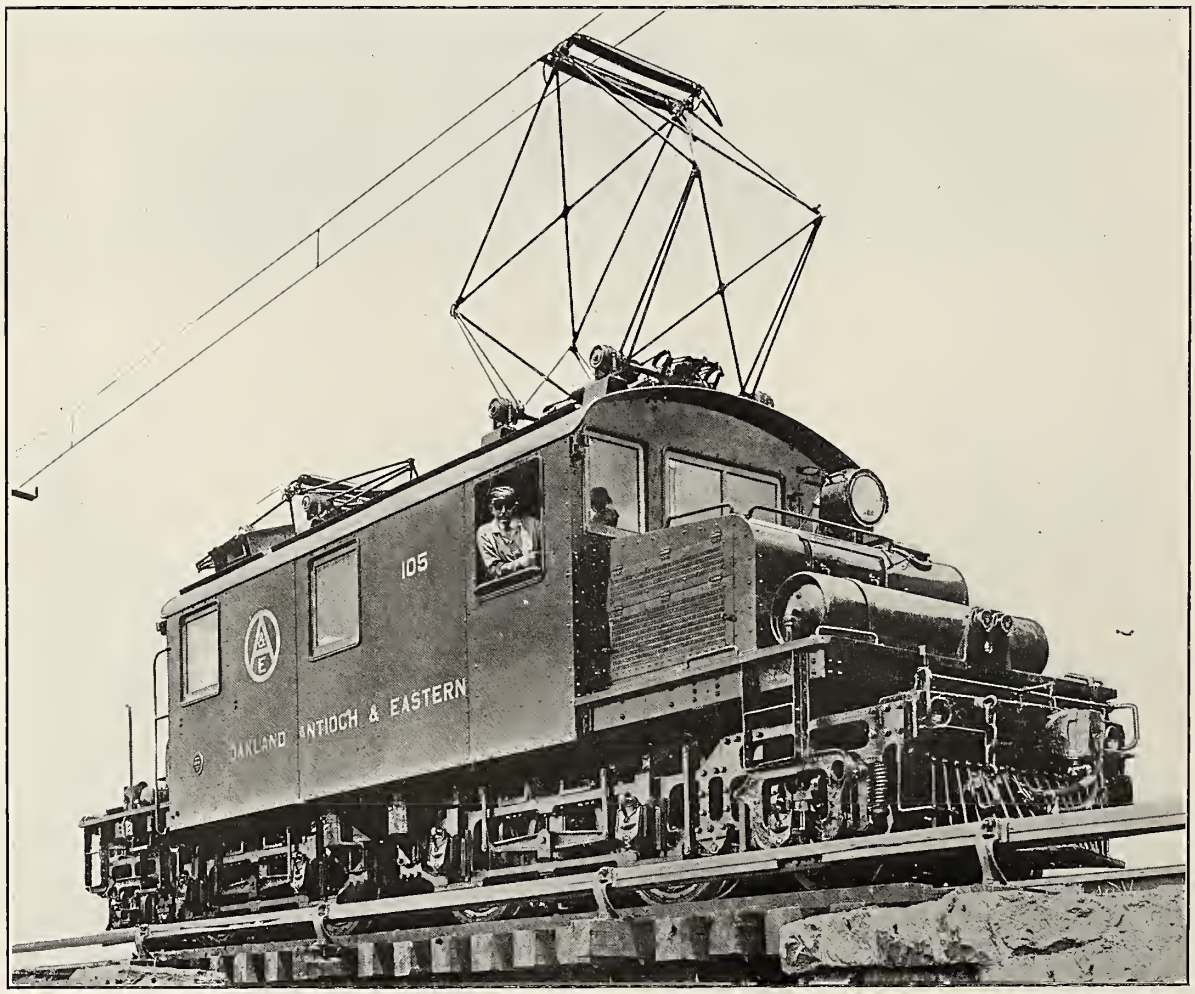

Fig. 2111—Baldwin-Westinghouse High Speed Electric Locomotive for Passenger Service. Built for the Oakland, Antioch & Eastern. Voltage, 600-1,200. Four 250 H.P. Motors. Weight, 124,000 lbs.

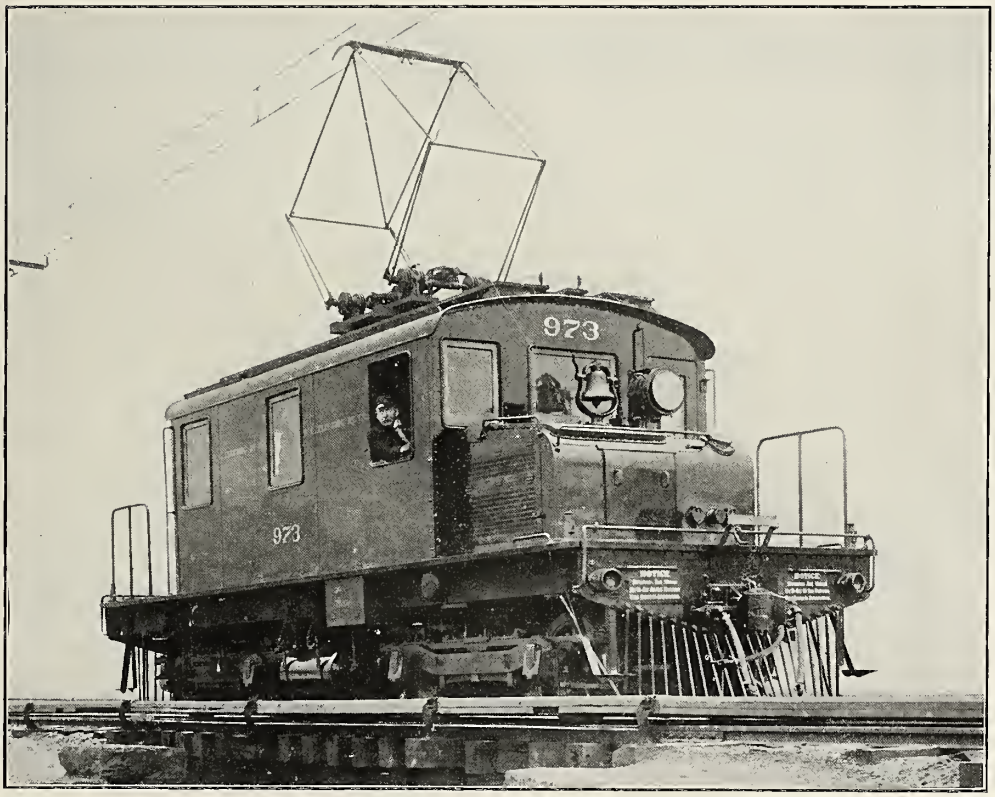

Fig. 2112—Baldwin-Westinghouse Electric Locomotive Built for the British Columbia Electric Railway. Voltage, 600-1,200. Weight, 100,000 lb.

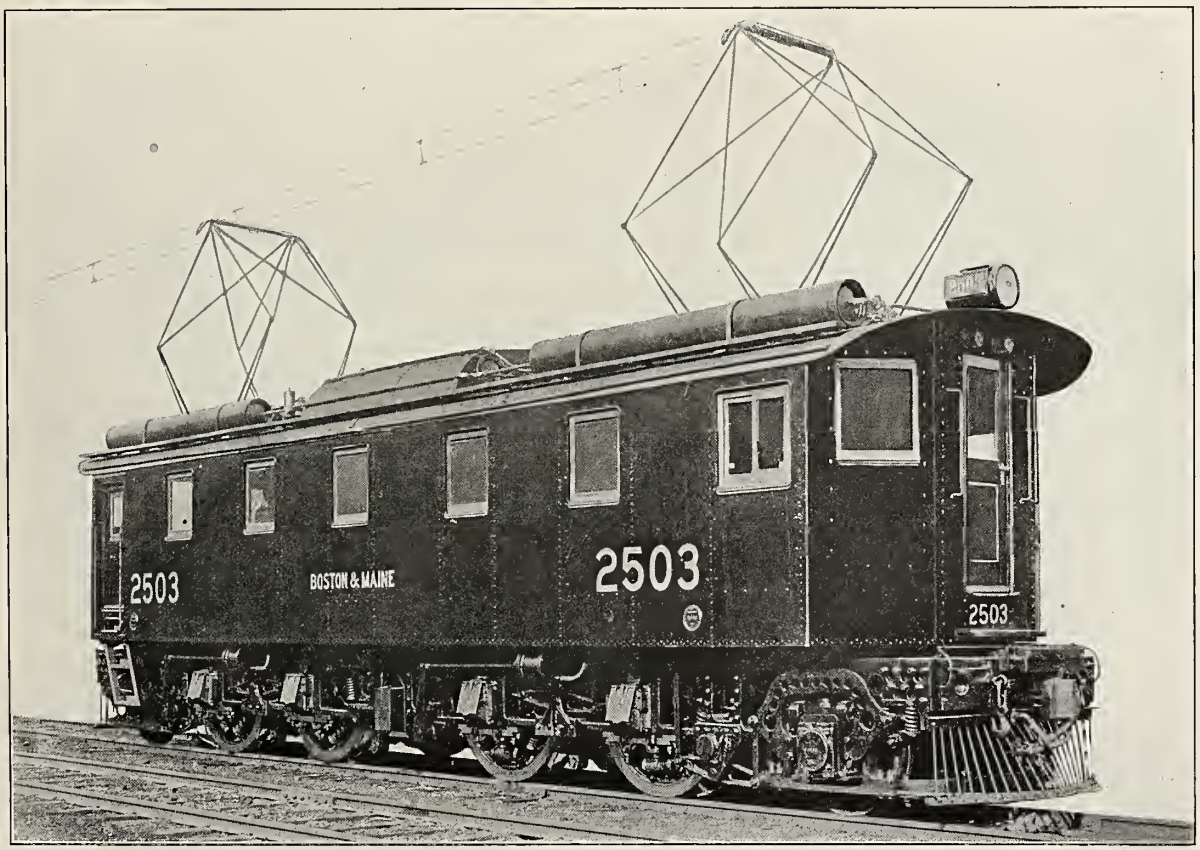

Fig. 2113—Baldwin-Westinghouse 11,000 Volt Alternating Current Locomotive Built for the Boston & Maine. Four Motors, Type 403; Voltage, 300; H. P., 315; Cycles, 25; Single Phase. Unit Switch Control. Diameter of Drivers, 63 in. Gear Ratio, 34 to 79. Tractive Effort, 30,000 lbs. Drawbar Pull at 35½ M. P. H., 12,900 lbs. Weight, 130 Tons.

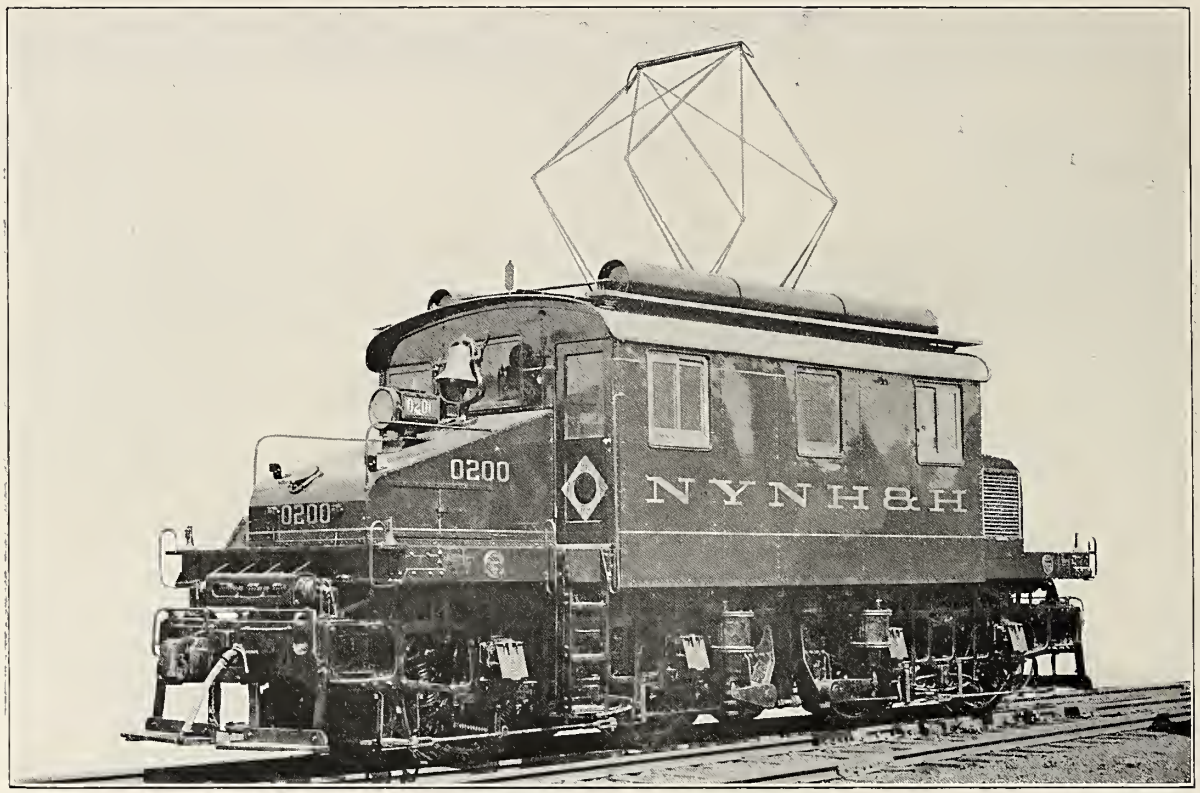

Fig. 2114—Baldwin-Westinghouse 11,000 Volt Alternating Current Switching Locomotive Built for the New York, New Haven & Hartford. Four Motors, Type 410; Voltage, 190; H. P., 110; Cycles, 25; Single Phase. Unit Switch Control. Diameter of Drivers, 63 in. Gear Ratio, 17 to 101. Tractive Effort, 39,500 lbs. Drawbar Pull at 7 M. P. H., 34,415 lbs. Weight, 80 Tons.

(*See Fig.* 2195 *for general drawing.*)

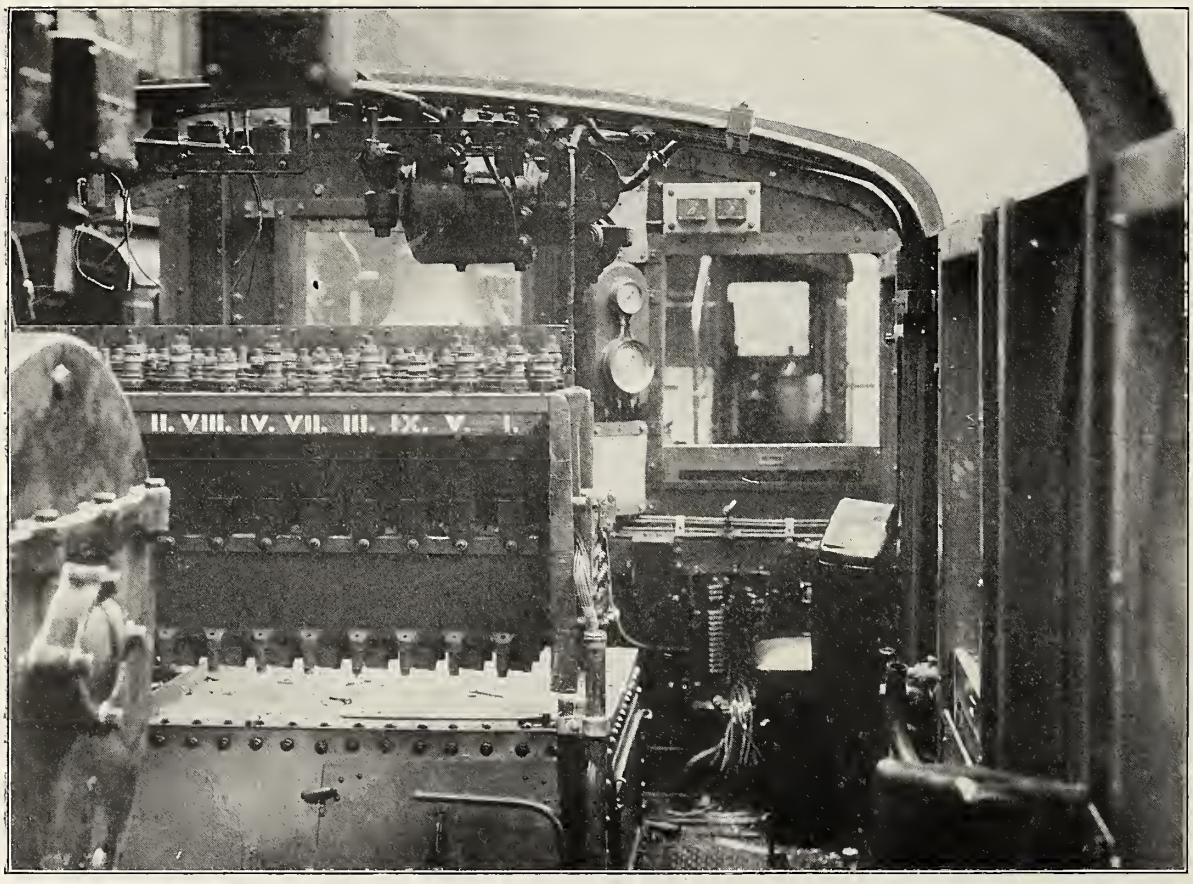

Fig. 2115—Interior of Switching Locomotive Illustrated in Fig. 2114 Showing Switch Group in Place.

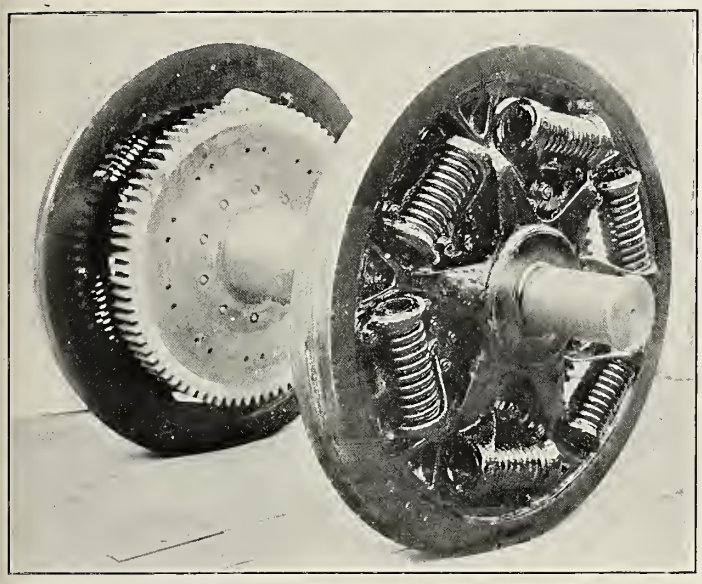

Fig. 2116—Driving Wheels of Electric Switching Locomotive Shown in Fig. 2114.

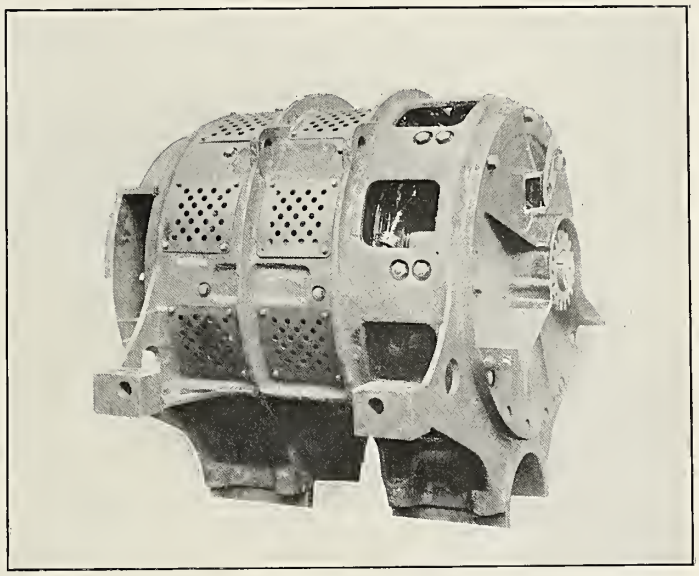

Fig. 2117—Motor for Electric Switching Locomotive Shown in Fig. 2114.

Fig. 2118—Baldwin-Westinghouse Single Phase Alternating Current Passenger and Freight Locomotive Built for the New York, New Haven & Hartford. Voltage, 11,000. Weight, 220,000 lb.

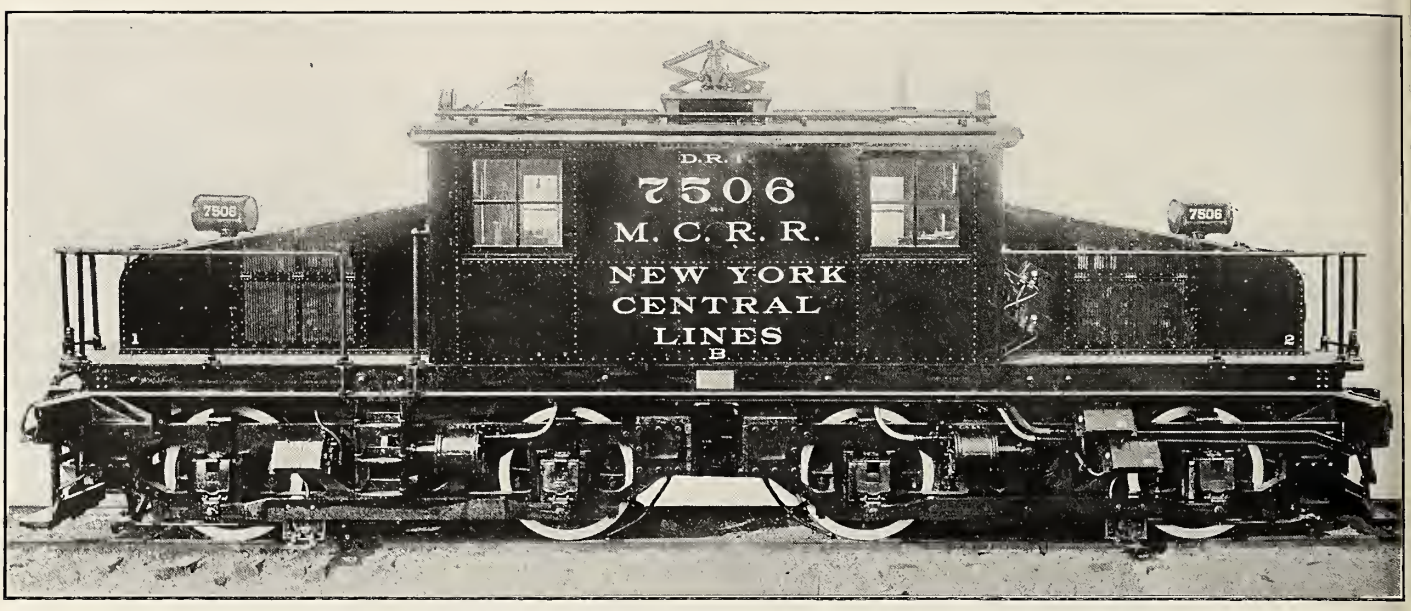

Fig. 2119—Electric Locomotive, Type 0440-E-240-4GE209-600V. Built for the New York Central by the General Electric Company.

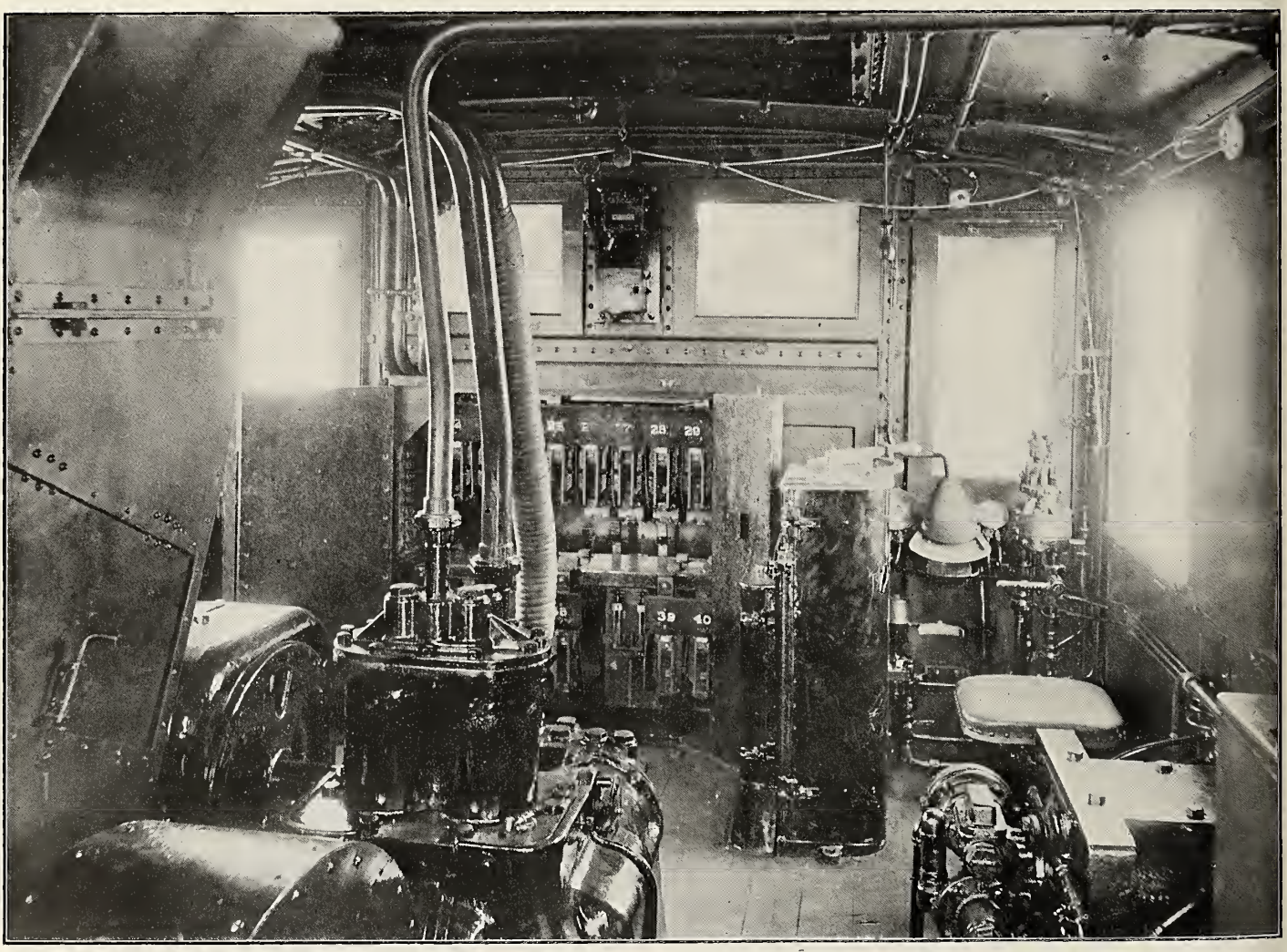

Fig. 2120—Inside of Cab of New York Central Locomotive shown in Fig. 2119.

Fig. 2121—Direct Current Locomotive Built by the Pennsylvania Railroad and the Westinghouse Electric & Manufacturing Company. Two Motors, Type 315-A; Voltage, 650; H. P., 2,000. Non-Automatic Unit Switch Control. Diameter of Drivers, 72 in. Tractive Effort, 60,000 lbs. Drawbar Pull at 52½ M. P. H., 14,400 lbs. Weight, 156 Tons.

(*See Figs.* 2124-2144 *for details.*)

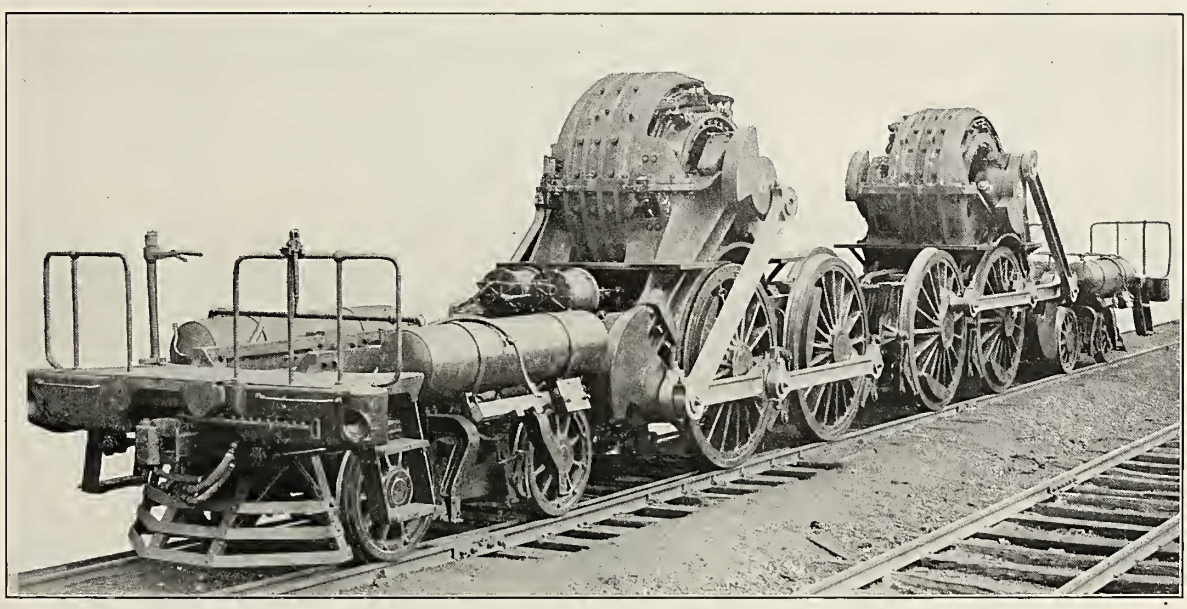

Fig. 2122—Motors and Running Gear of Pennsylvania Locomotive Shown in Fig. 2121.

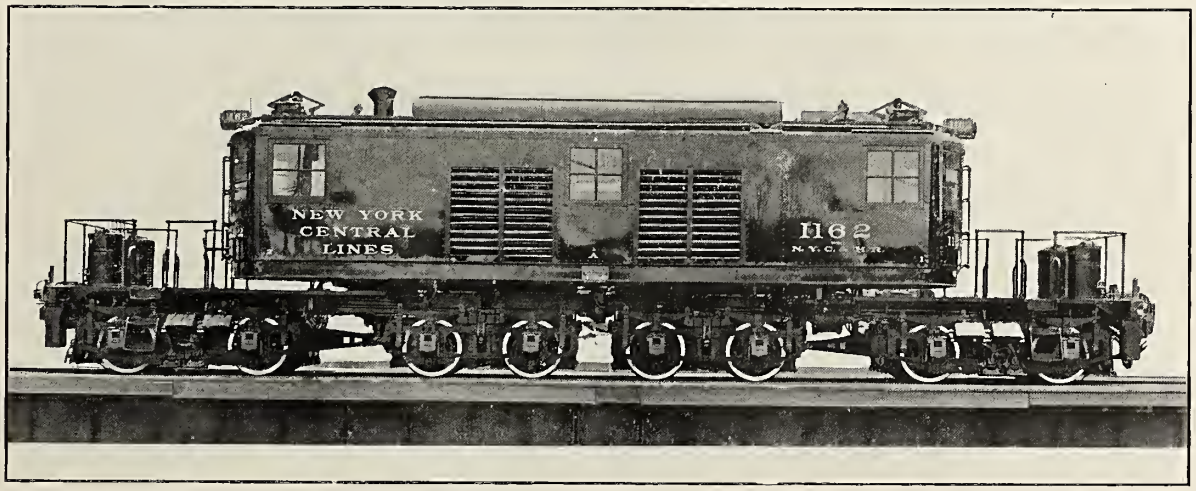

Fig. 2123—Electric Locomotive, Type 4444-E-250-8GE91-600V. Built for the New York Central by the General Electric and American Locomotive Companies.

(*See Figs.* 2168-2170 *for details.*)

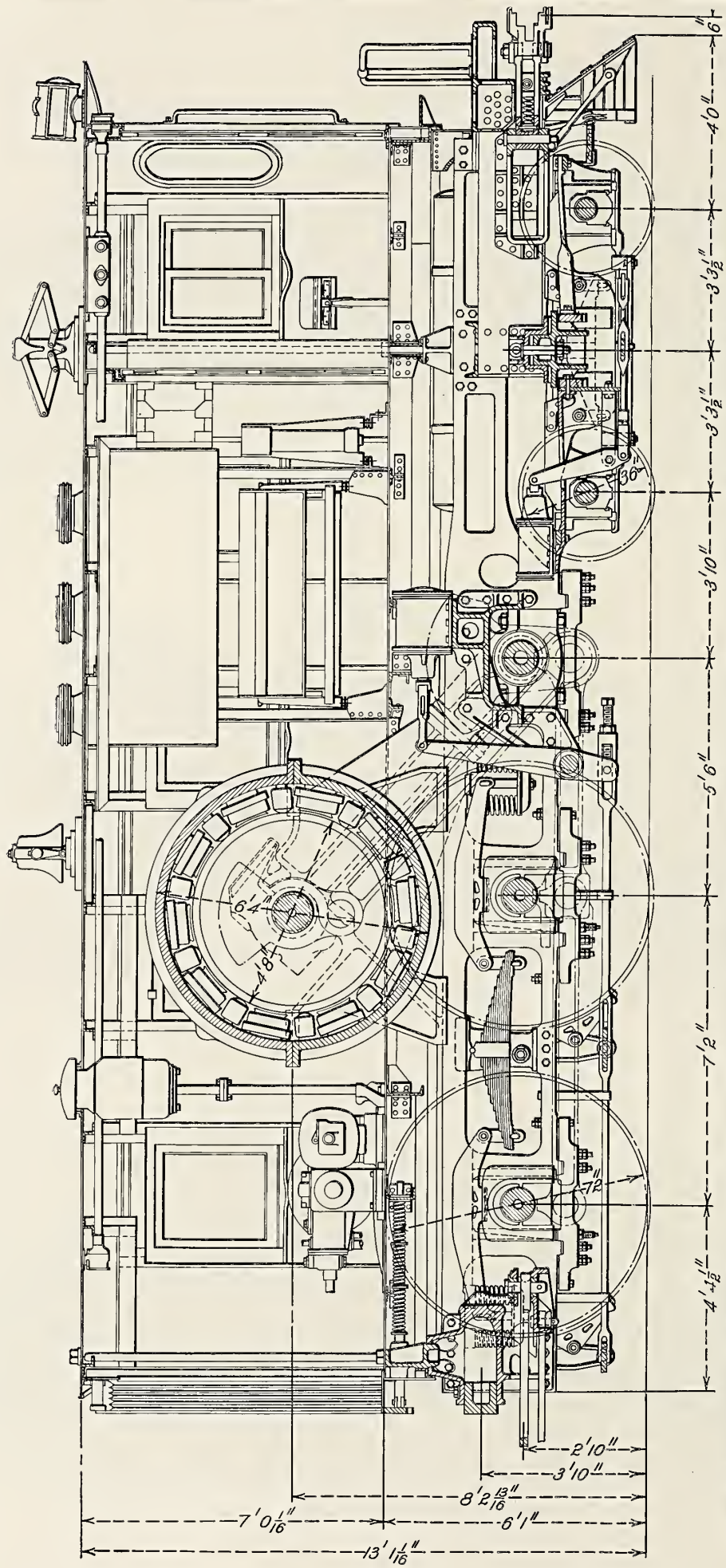

Fig. 2124—General Elevation of Direct Current Locomotive Built by the Pennsylvania Railroad and the Westinghouse Electric & Manufacturing Company. Two Motors, Type 315-A; H. P., 2,000; Voltage, 650. Diameter of Drivers, 72 in. Tractive Effort, 60,000 lbs. Drawbar Pull at 32 M. P. H., 33,500 lbs.; Drawbar Pull at 52½ M. P. H., 14,400 lbs. Weight, 156 Tons.

(*See Fig. 2121 for general view.*)

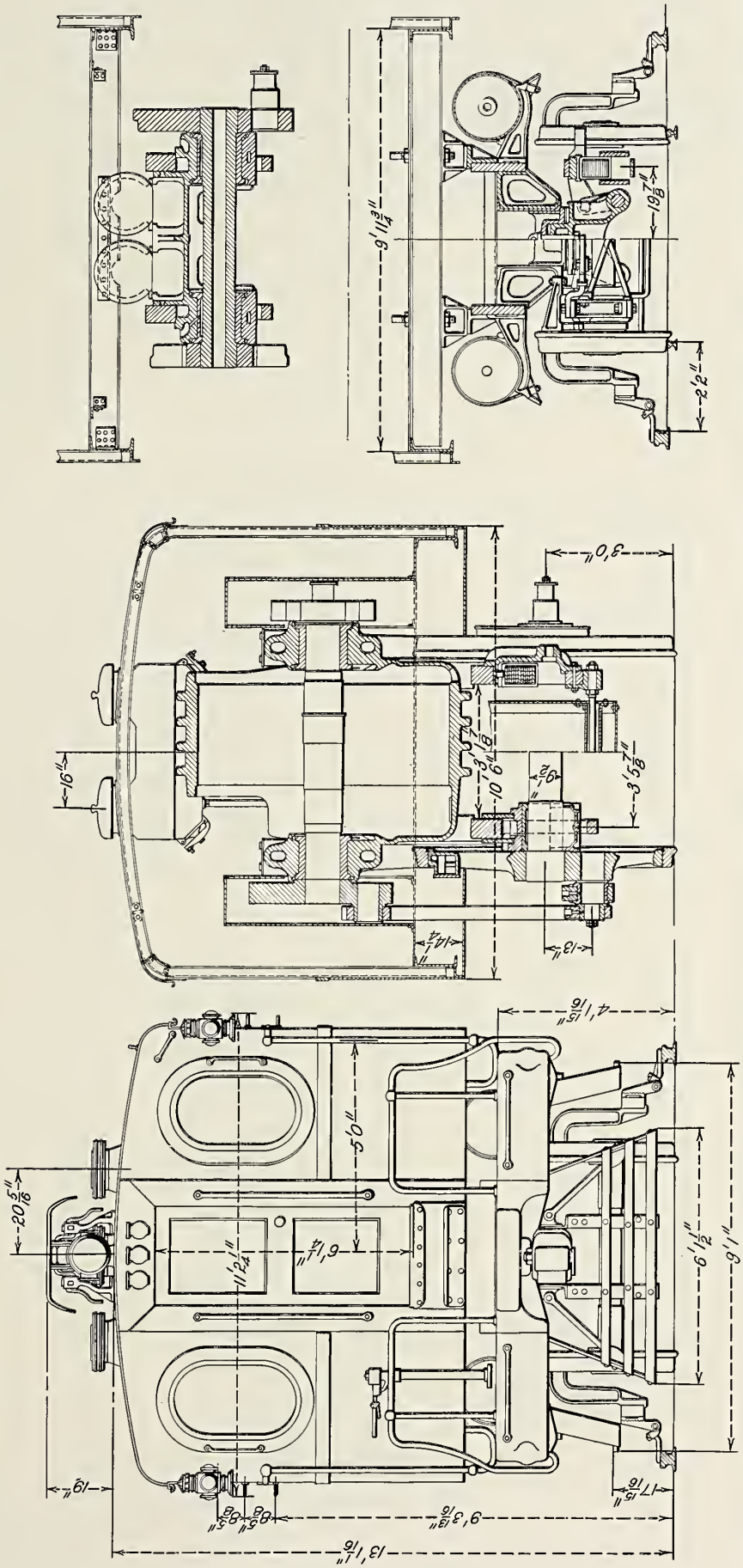

Fig. 2125—Cross Sections of Direct Current Locomotive Shown in Fig. 2124. Built by the Pennsylvania Railroad and the Westinghouse Electric & Manufacturing Company.

(*See Fig.* 2121 *for general view.*)

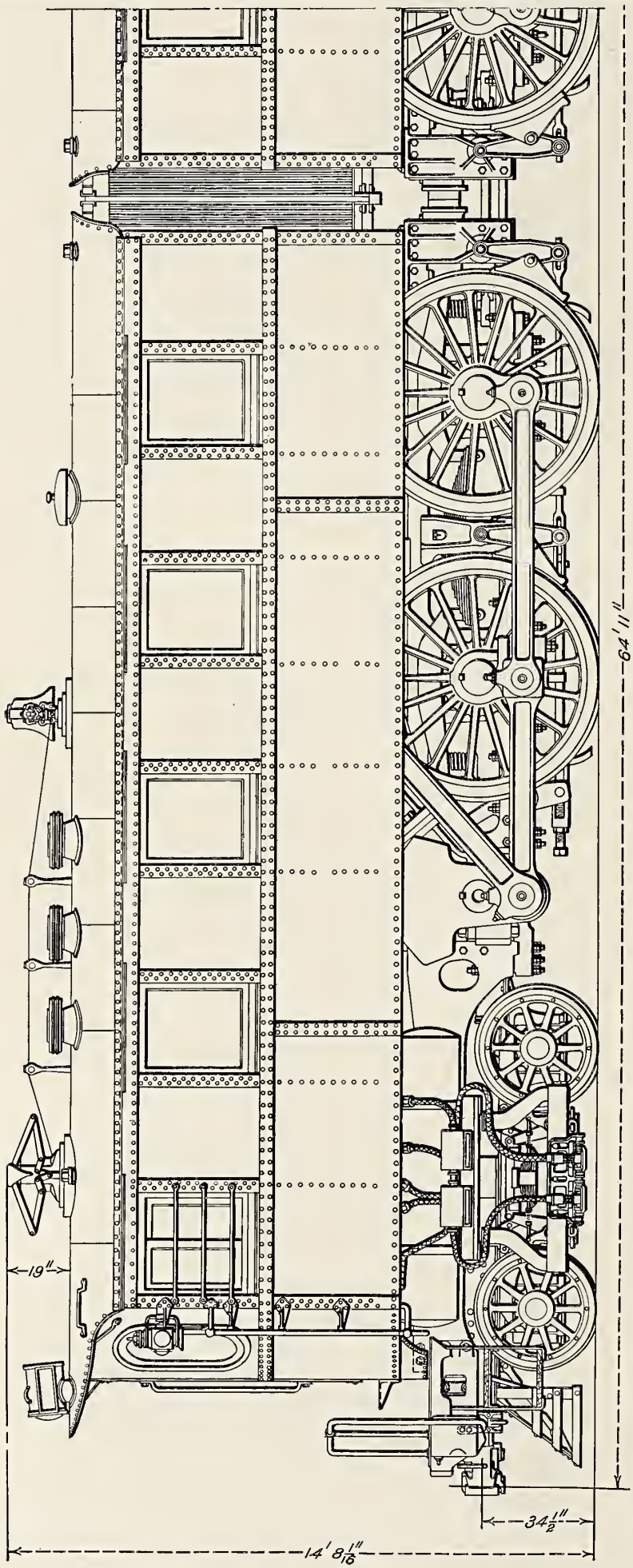

Fig. 2126—General Elevation of Direct Current Locomotive Built by the Pennsylvania Railroad and the Westinghouse Electric & Manufacturing Company. Two Motors, Type 315-A; H. P., 2,000; Voltage, 650. Non-Automatic Unit Switch Control. Diameter of Drivers, 72 in. Tractive Effort, 60,000 lbs. Drawbar Pull at 32 M. P. H., 23,500 lbs.; Drawbar Pull at 52½ M. P. H., 14,400 lbs. Weight, 156 Tons.

(*See Fig.* 2121 *for general view.*)

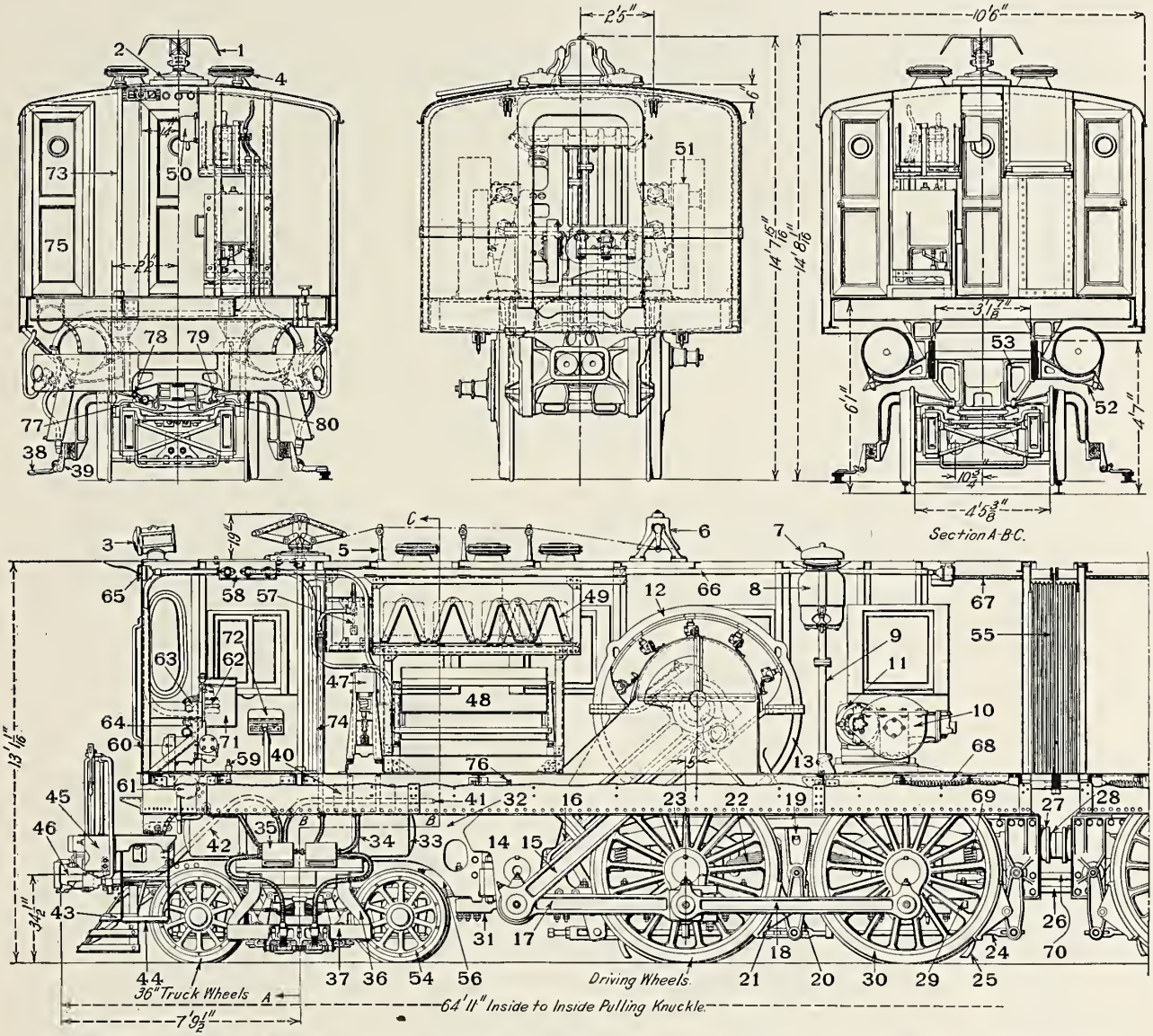

Fig. 2127—General Arrangement of Control Apparatus in the Cab of Electric Locomotive. Built by the Pennsylvania Railroad and the Westinghouse Electric & Manufacturing Company.

Names of Parts of Electric Locomotive, Fig. 2127.

1 *Overhead Contact Shoe*
2 *Contact Shoe Pantagraph Base*
3 *Headlight Lens*
4 *Grid Resistance Ventilator*
5 *Bell Rope Stand*
6 *Bell*
7 *Sand Box Opening Cover*
8 *Sand Box Body*
9 *Combined Inter-cooler Pipes and Sand Box Support*
10 *Air Compressor Gear Case*
11 *Air Compressor Motor Case*
12 *Upper Half of Motor Field Frame*
13 *Lower Half of Motor Field Frame*
14 *Jack Shaft Counter-weight*
15 *Motor Rod*
16 *Jack Shaft Cross Tie*
17 *Main Rod*
18 *Side Rod*
19 *Semi-Elliptical Driving Spring Fulcrum and Brake Hanger Support*
20 *Brake Lever*
21 *Brake Clog*
22 *Semi-Elliptical Driving Spring*
23 *Spring Rigging Equalizer Beam*
24 *Driver Brake Rod*
25 *Delivery End of Sand Pipe*
26 *Safety Bar between Semi-Units*
27 *Draft Gear Casting between Semi-Units*
28 *Draft Gear Chafing Block*
29 *Pedestal Jaw Cap or Binder*
30 *Driving Wheel Tire*
31 *Jack Shaft Pedestal Cap*
32 *Main Frame of Engine*
33 *Main Air Reservoir*
34 *Cable*
35 *Bus Line Fuse Box*
36 *Third Rail Shoe Beam Bracket*
37 *Third Rail Shoe Beam*
38 *Third Rail Shoe*
39 *Third Rail Shoe Adjusting Bracket*
40 *Control Reservoir*
41 *Bus Line Cable between Semi-Units*
42 *Bus Line Cable between Locomotives*
43 *Pilot*
44 *Engine Step*
45 *Bumper Beam*
46 *Coupler Head*
47 *Main Circuit Breaker*
48 *Control Groups*
49 *Grid Resistance Frame*
50 *Auxiliary Circuit Breaker*
51 *Motor Crank*
52 *Combined Fuse Box Support and Main Air Reservoir Bracket*
53 *Bolster Bracket*
54 *Engine Truck Wheel*
55 *Diaphragm between Semi-Units*
56 *Truck Brake Cylinder*
57 *Main Switch*
58 *Junction Box*
59 *Grounding Switch*
60 *Distributing Valve and Double Chamber Reservoir*
61 *Equalizing Reservoir*
62 *Brake Valve*
63 *Reducing Valve*
64 *Feed Valve*
65 *Bus Line Socket*
66 *Train Cable*
67 *Train Cable Jumper*
68 *Diaphragm Spring*
69 *Helical Driving Spring*
70 *Draw Bar between Semi-Units*
71 *Master Controller*
72 *Motorman's Seat*
73 *Cab Lifting Rod*
74 *Bulkhead*
75 *Bulkhead Door*
76 *Driver Brake Cylinder*
77 *Steam Heat Pipe*
78 *Reservoir Pipe*
79 *Brake Pipe*
80 *Signal Pipe*

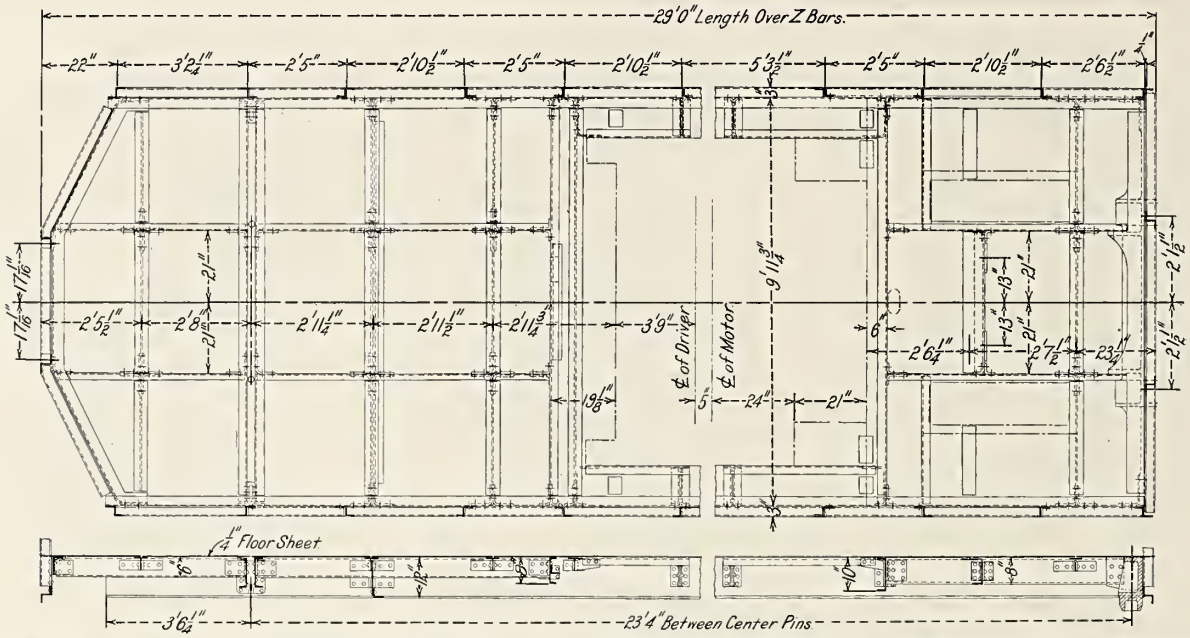

Fig. 2128—General Arrangement of Cab Underframe for Electric Locomotive. Built by the Pennsylvania Railroad and the Westinghouse Electric & Manufacturing Company.

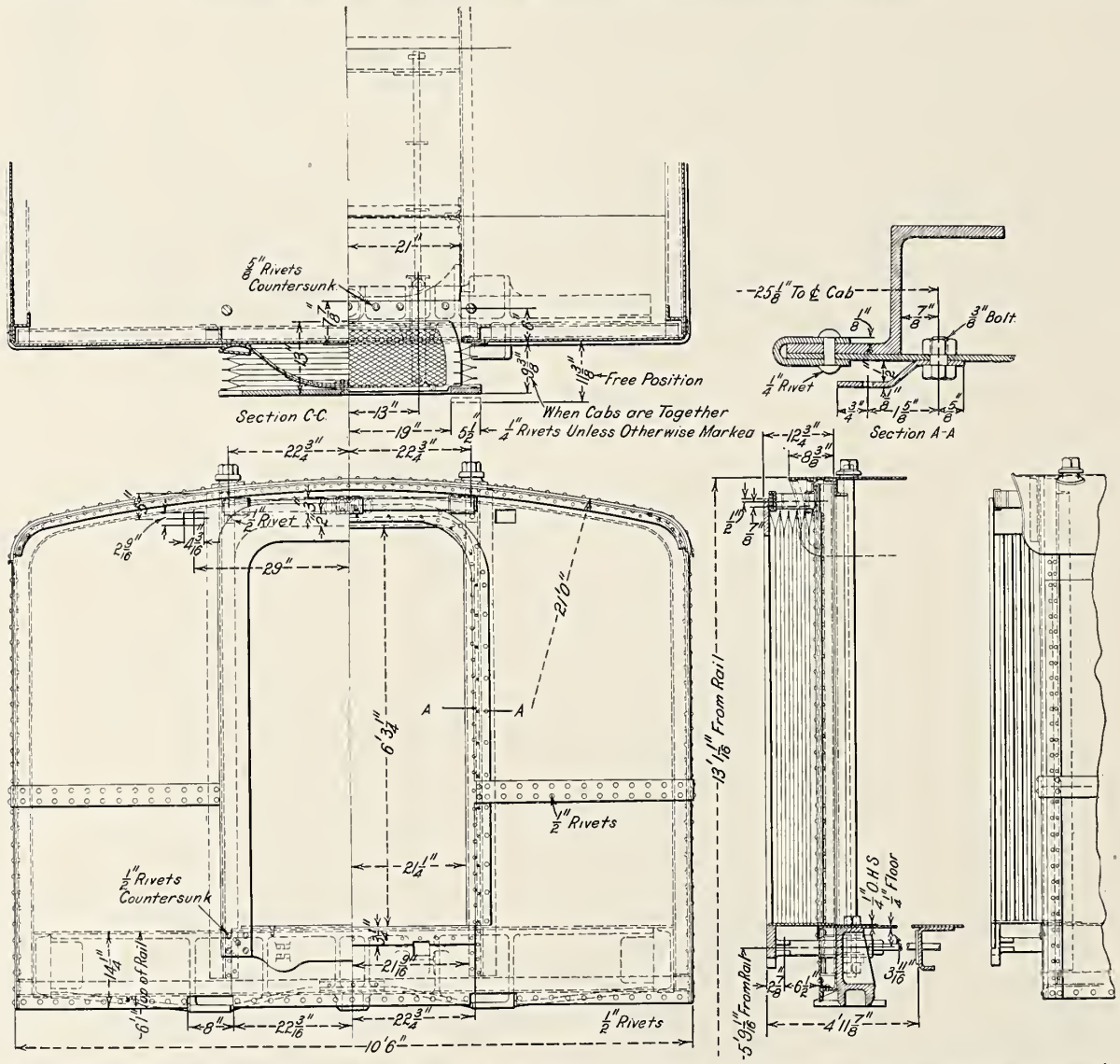

Fig. 2129—Buffer Arrangement and Rear End of Cab of Electric Locomotive. Built by the Pennsylvania Railroad and the Westinghouse Electric & Manufacturing Company.

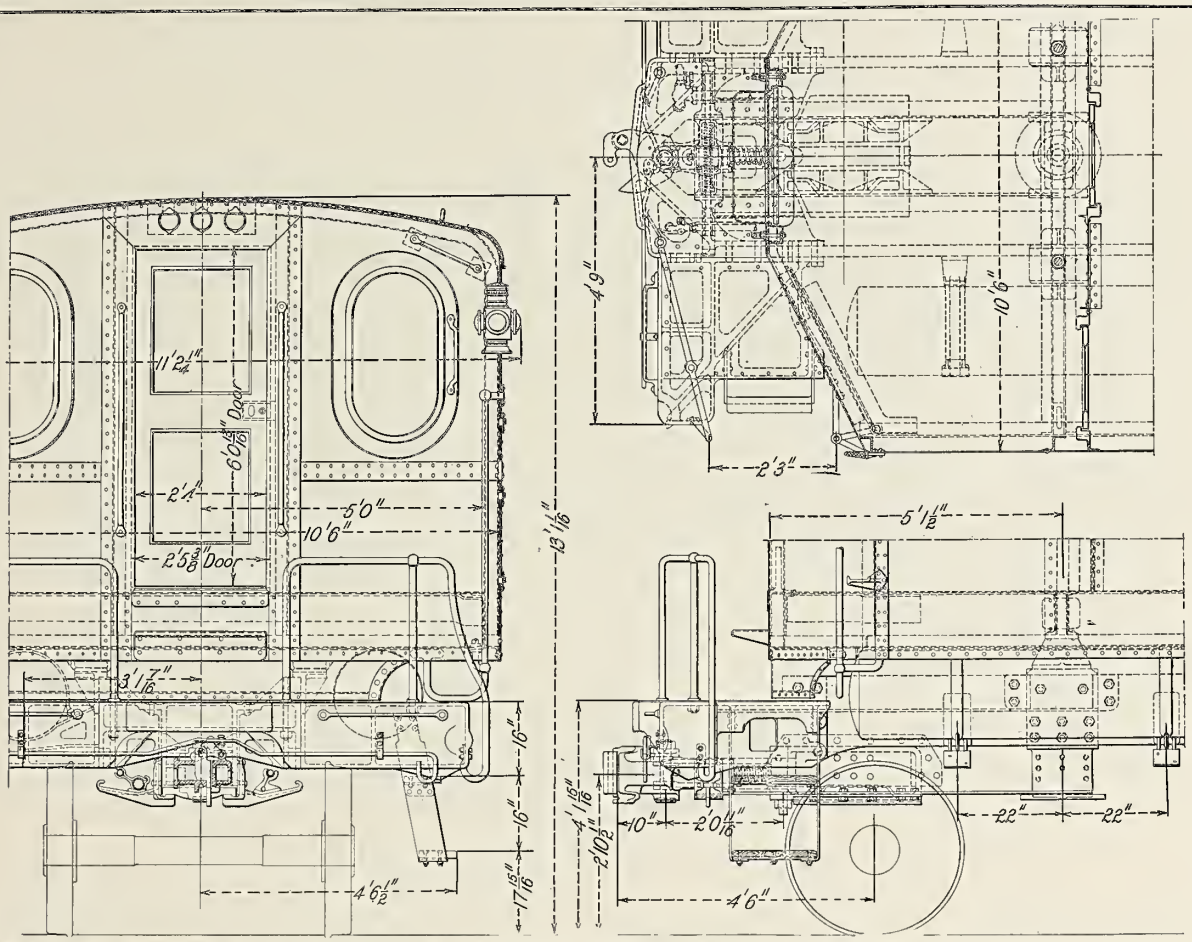

Fig. 2130—General Arrangement of Front End of Electric Locomotive. Built by the Pennsylvania Railroad and the Westinghouse Electric & Manufacturing Company.

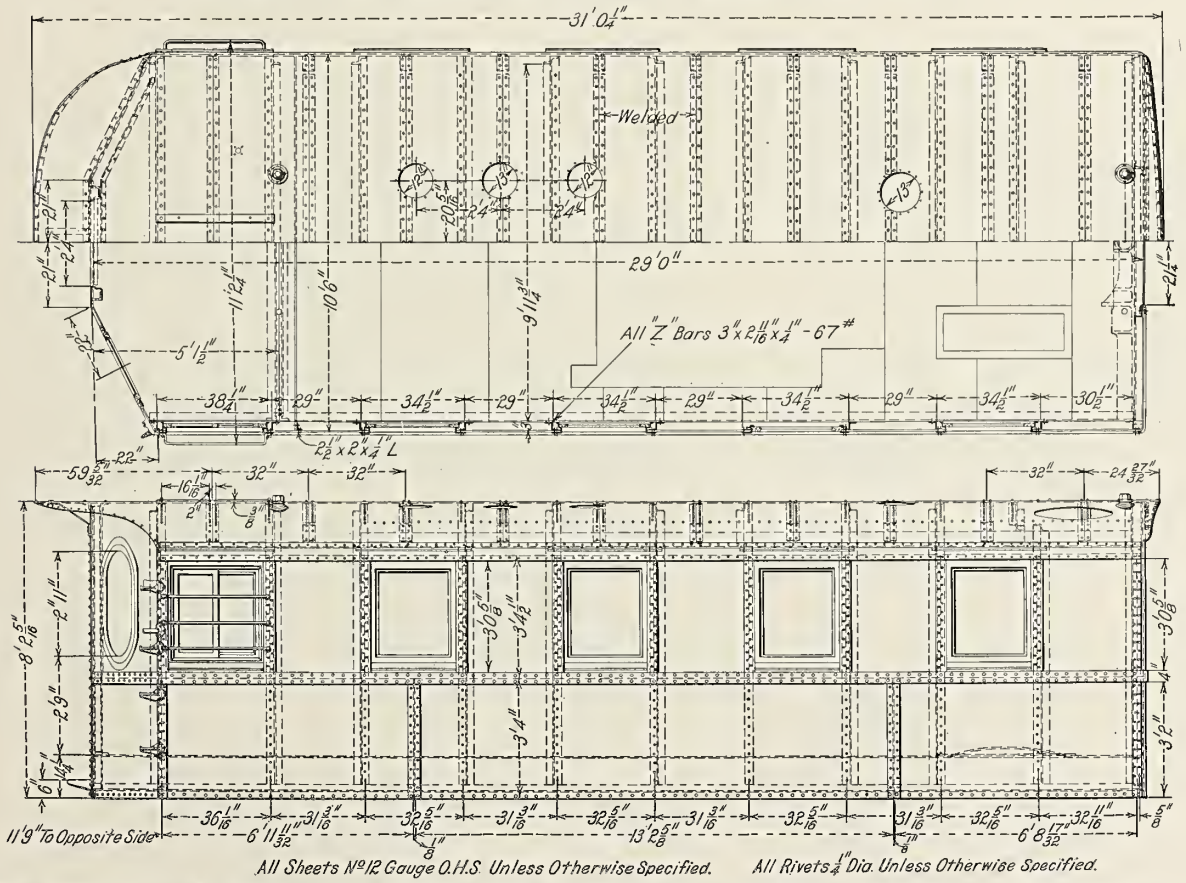

Fig. 2131—General Arrangement of Steel Cab for Electric Locomotive. Built by the Pennsylvania Railroad and the Westinghouse Electric & Manufacturing Company.

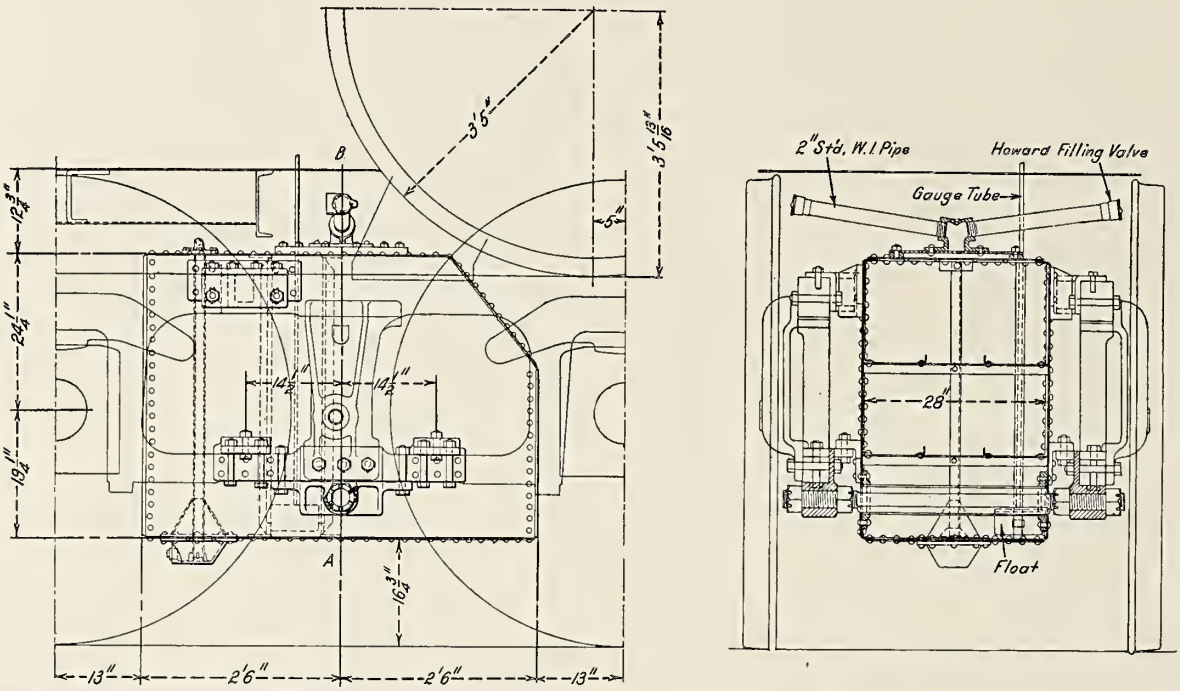

Fig. 2132—General Arrangement of Heater Tank on Electric Locomotive. Built by the Pennsylvania Railroad and the Westinghouse Electric & Manufacturing Company.

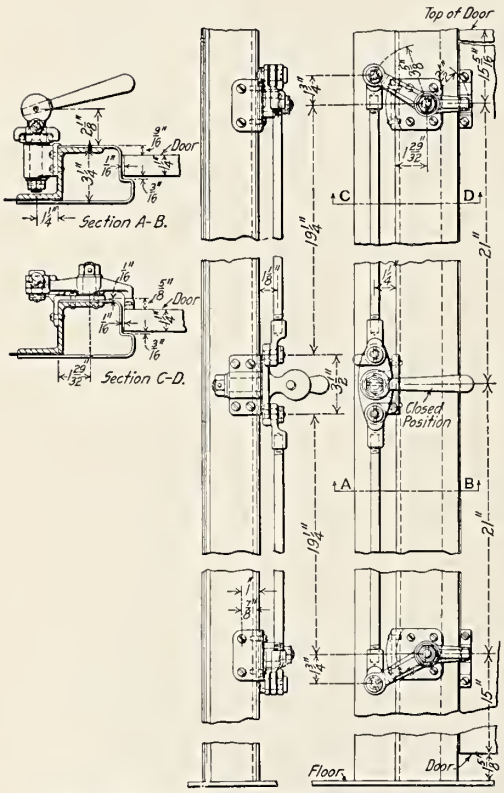

Fig. 2133—Locking Device for Cab End Door on Pennsylvania Electric Locomotive.

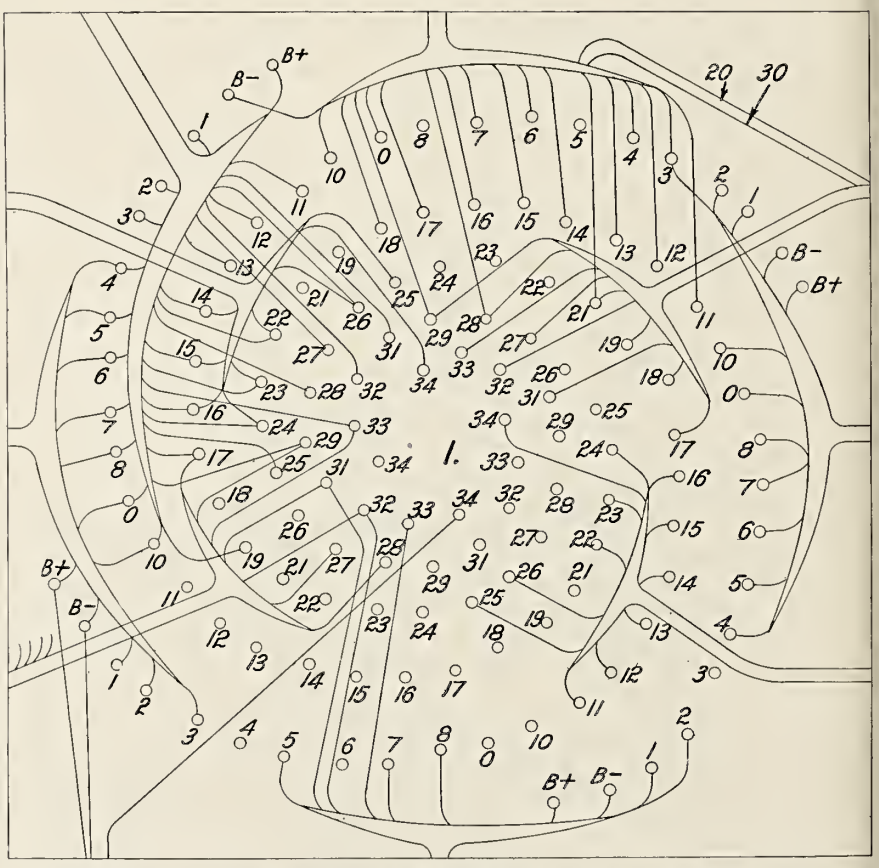

Fig. 2134—Wiring Diagram for Junction Box, Type 427-B, Shown in Fig. 2135.

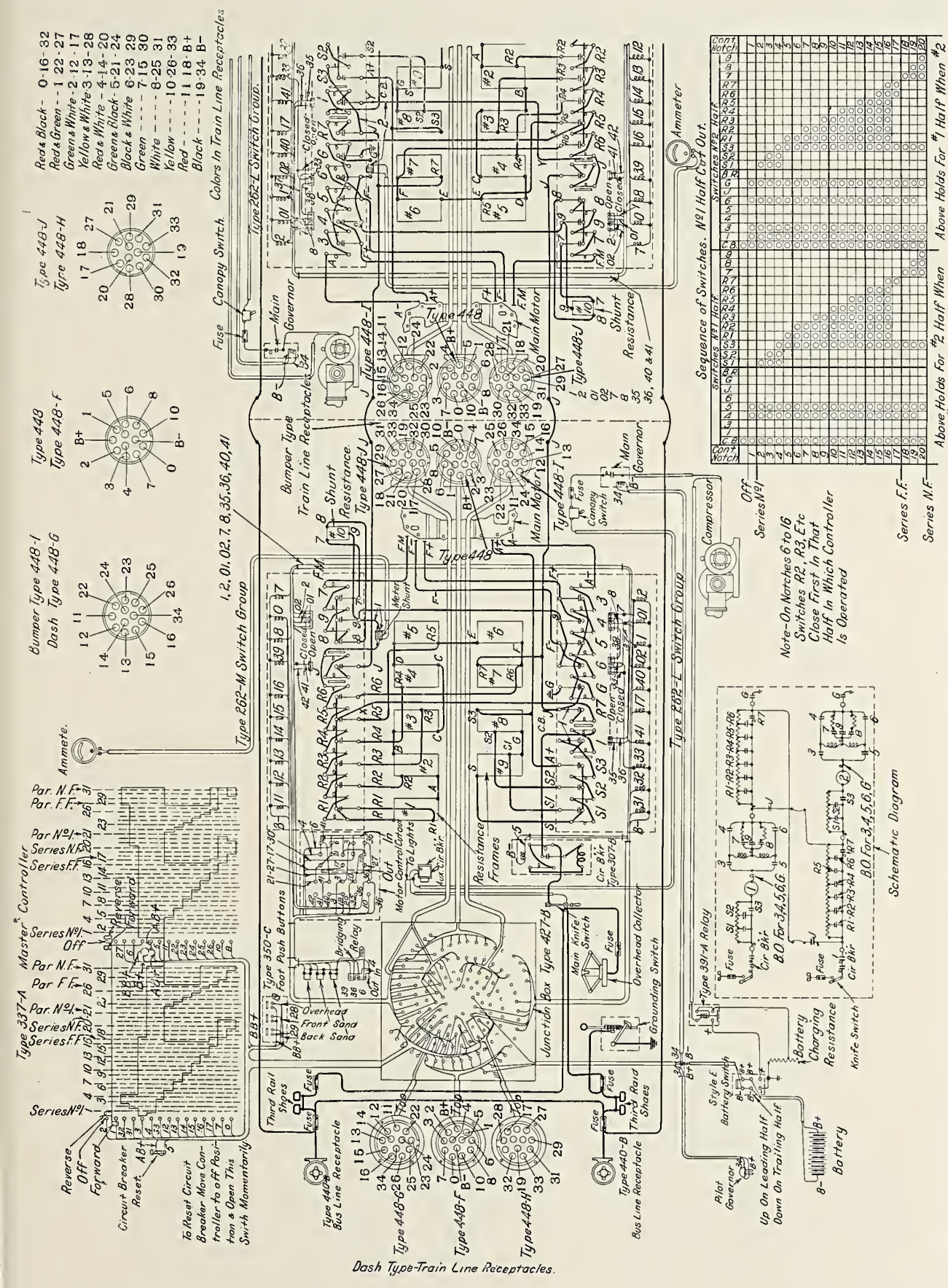

Fig. 2135—Diagram of Main and Control Wiring, Unit Switch Control System and Diagram of Connections for Electric Locomotive. Built by the Pennsylvania Railroad and the Westinghouse Electric & Manufacturing Company. See Fig. 2134 for Detail of Junction Box.

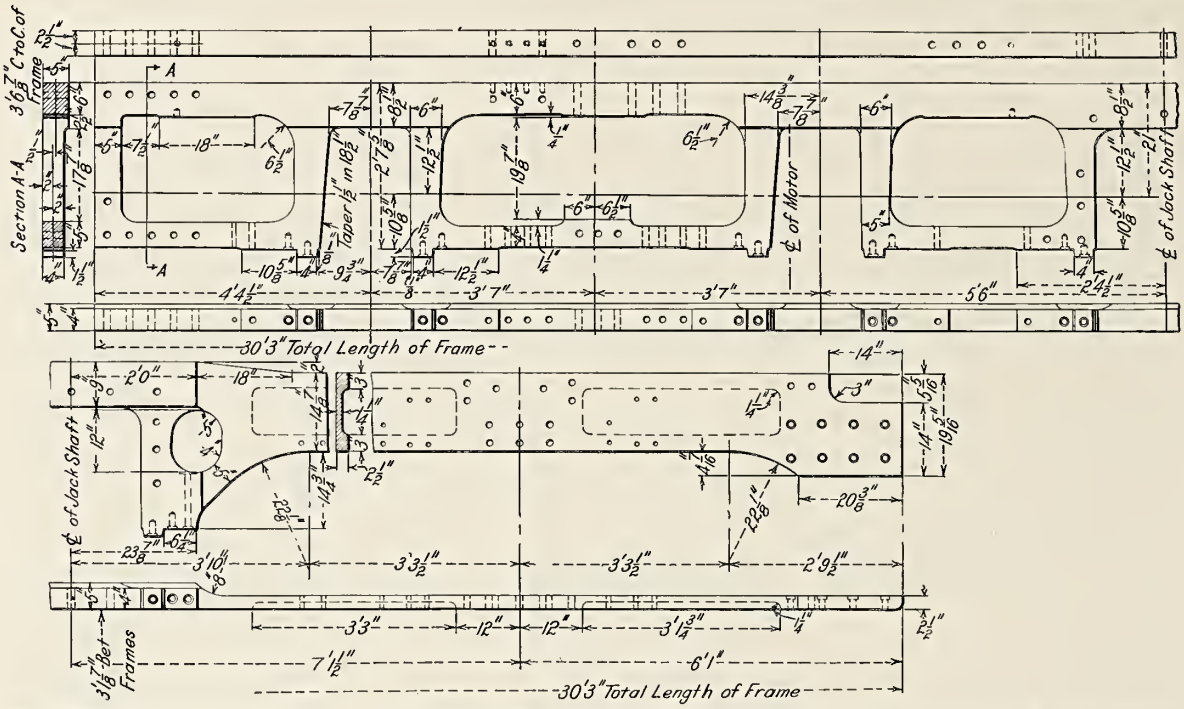

Fig. 2136—Frame for Electric Locomotive. Built by the Pennsylvania Railroad and the Westinghouse Electric & Manufacturing Company.

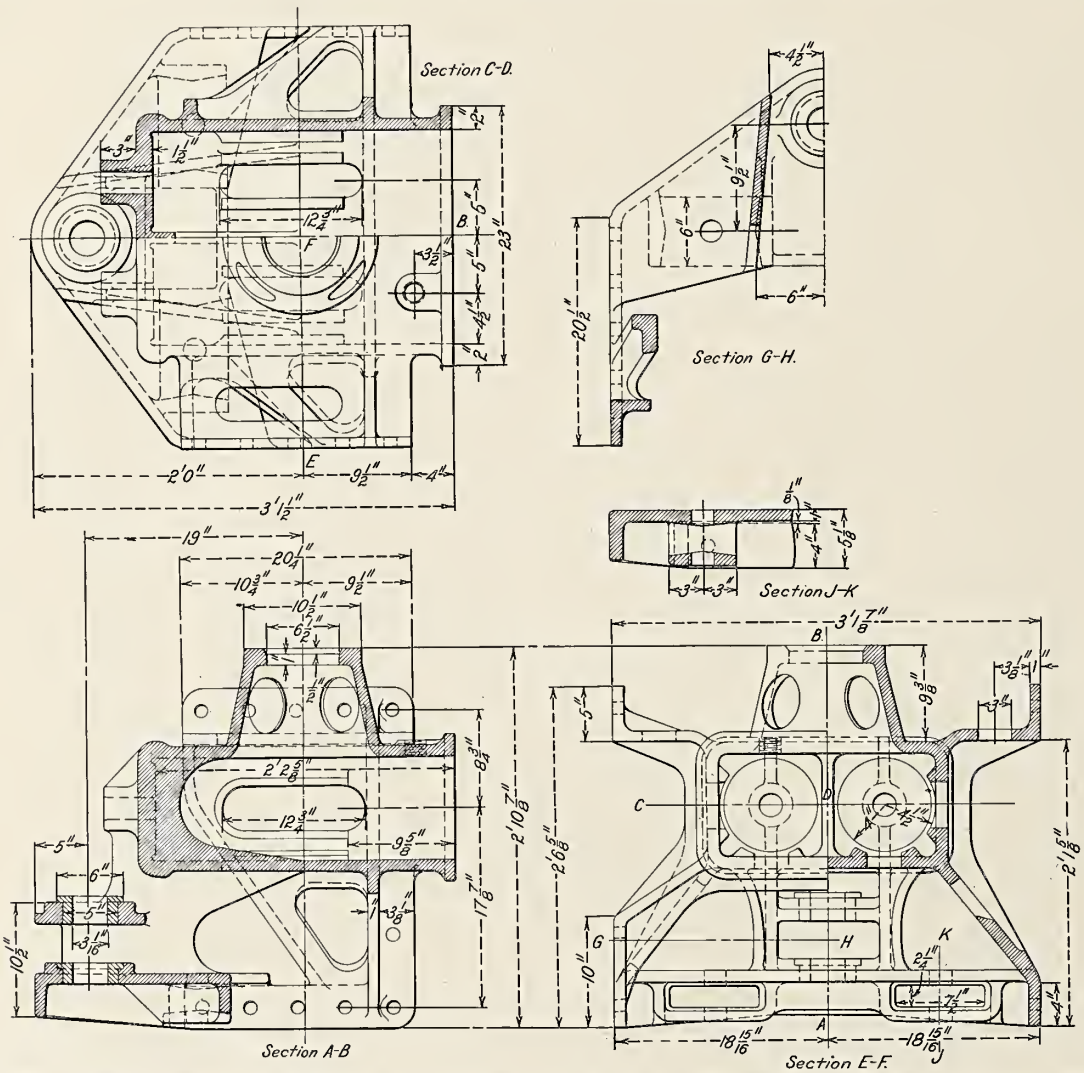

Fig. 2137—Draft Casting for Electric Locomotive. Built by the Pennsylvania Railroad and the Westinghouse Electric & Manufacturing Company.

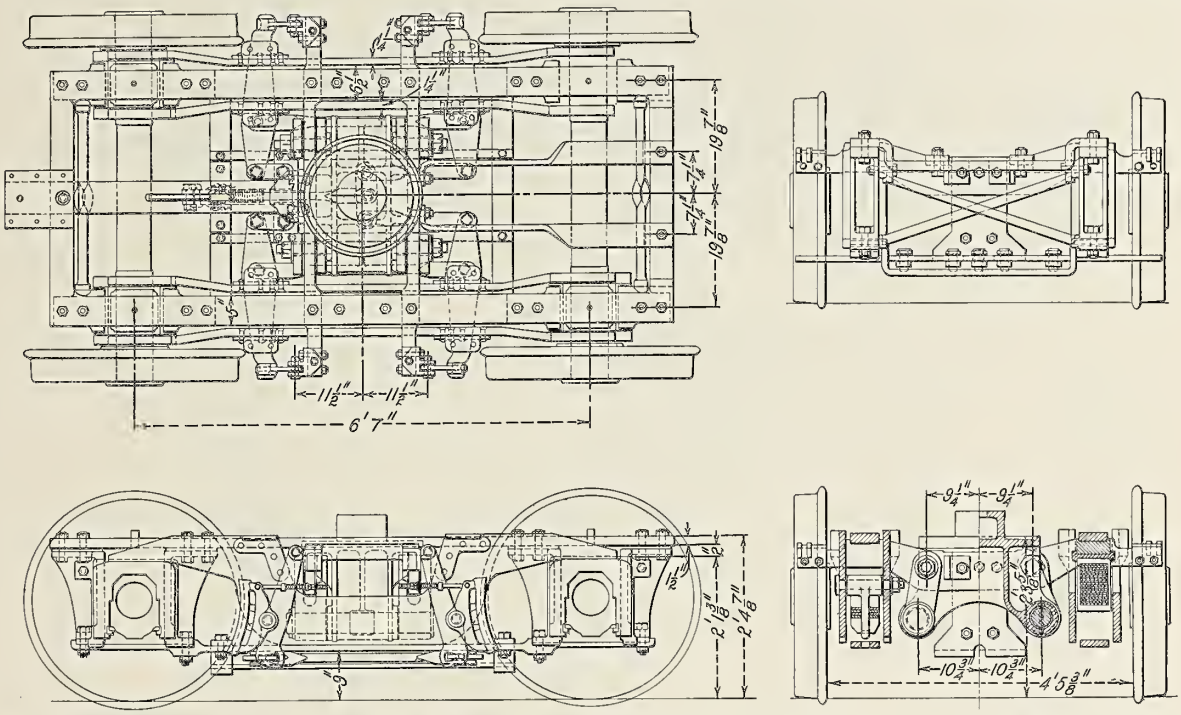

Fig. 2138—Four-Wheel Front Truck for Electric Locomotive. Built by the Pennsylvania Railroad and the Westinghouse Electric & Manufacturing Company.

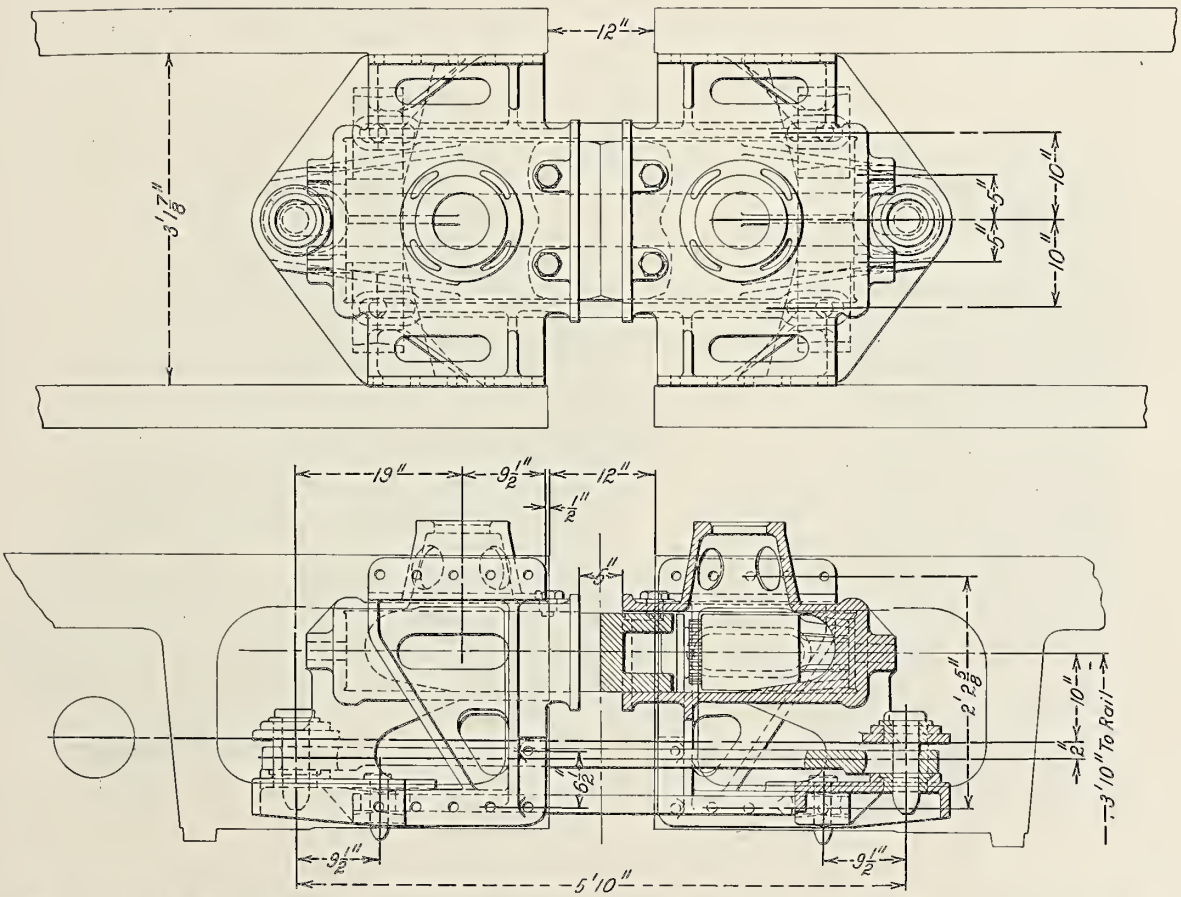

Fig. 2139—Draft Gear Between Units on Electric Locomotive. Built by the Pennsylvania Railroad and the Westinghouse Electric & Manufacturing Company.

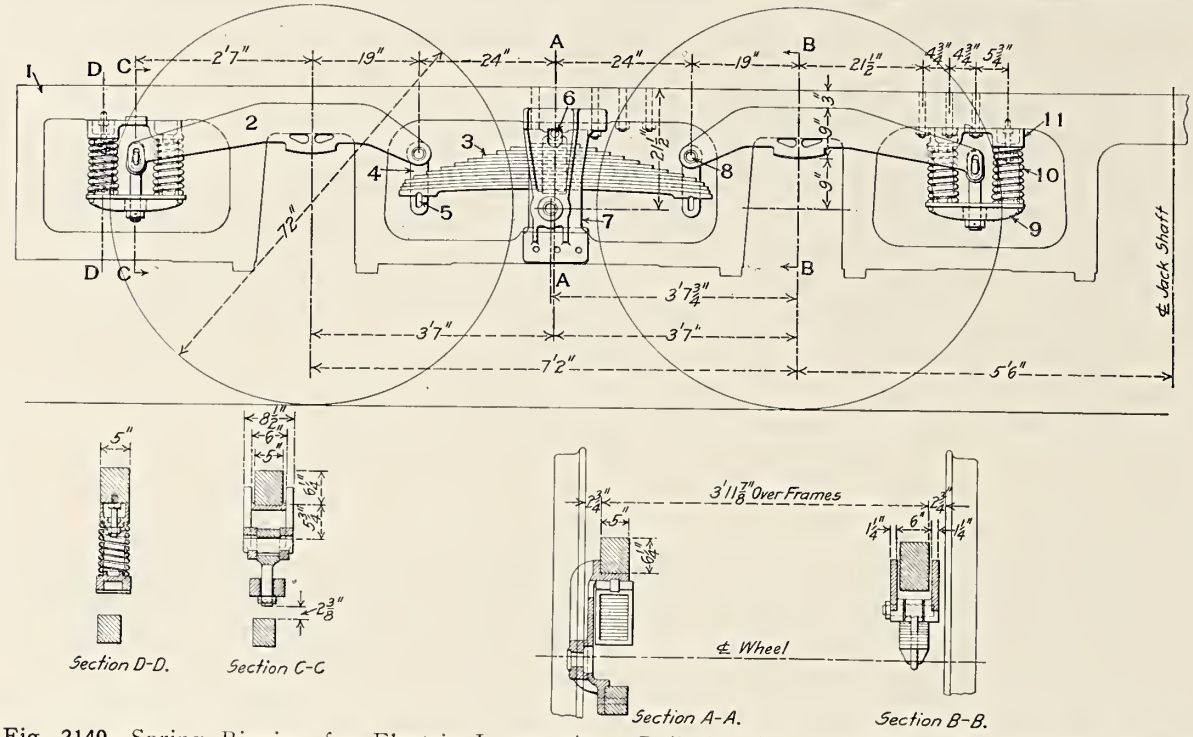

Fig. 2140—Spring Rigging for Electric Locomotive. Built by the Pennsylvania Railroad and Westinghouse Electric & Manufacturing Company.

Names of Parts of Fig. 2140.

1 *Frame*
2 *Equalizer*
3 *Driver Spring*
4 *Spring Hanger*
5 *Spring Hanger Gib*
6 *Spring Roller*
7 *Frame Filling*
8 *Spring Hanger Pin*
9 *Spring Cap*
10 *Driver Coil Spring*
11 *Spring Seat*

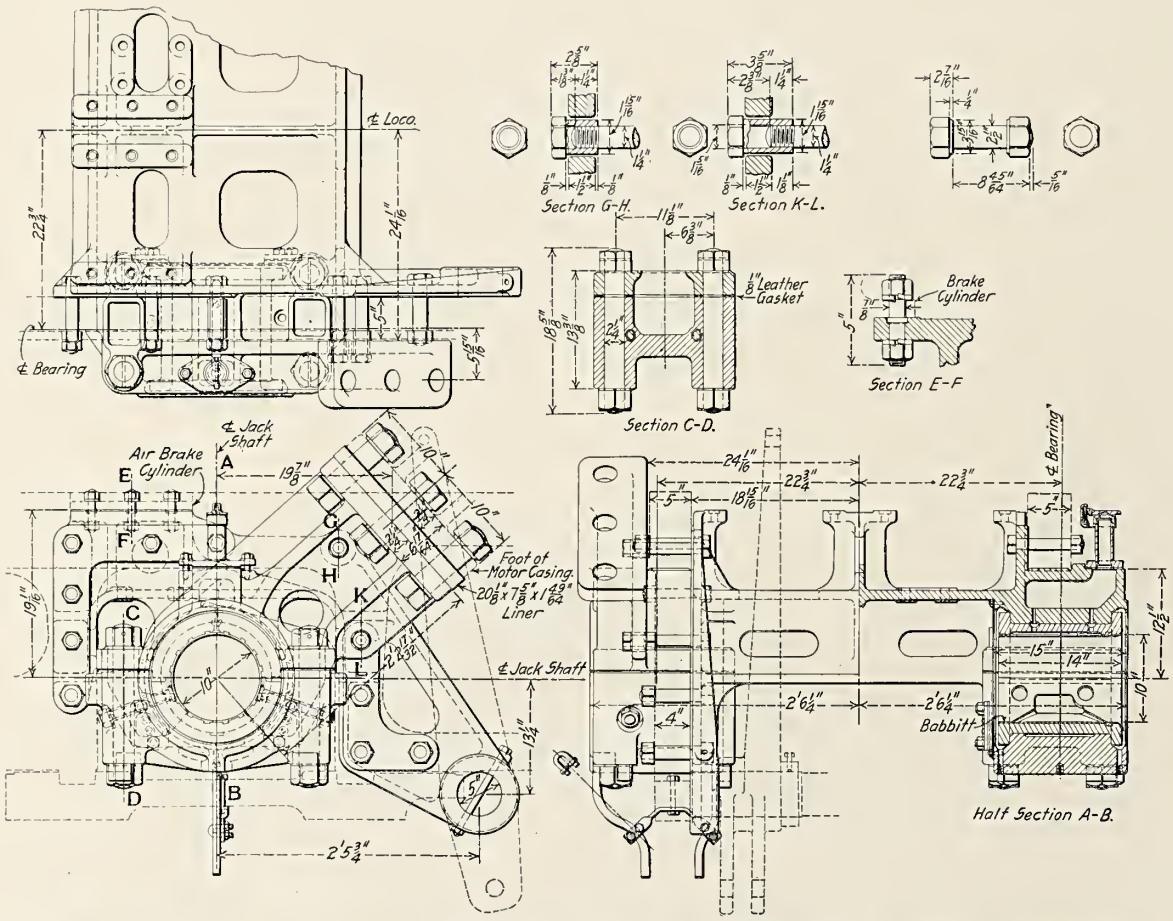

Fig. 2141—Jack Shaft Bearing and Frame Crosstie for Pennsylvania Electric Locomotive.

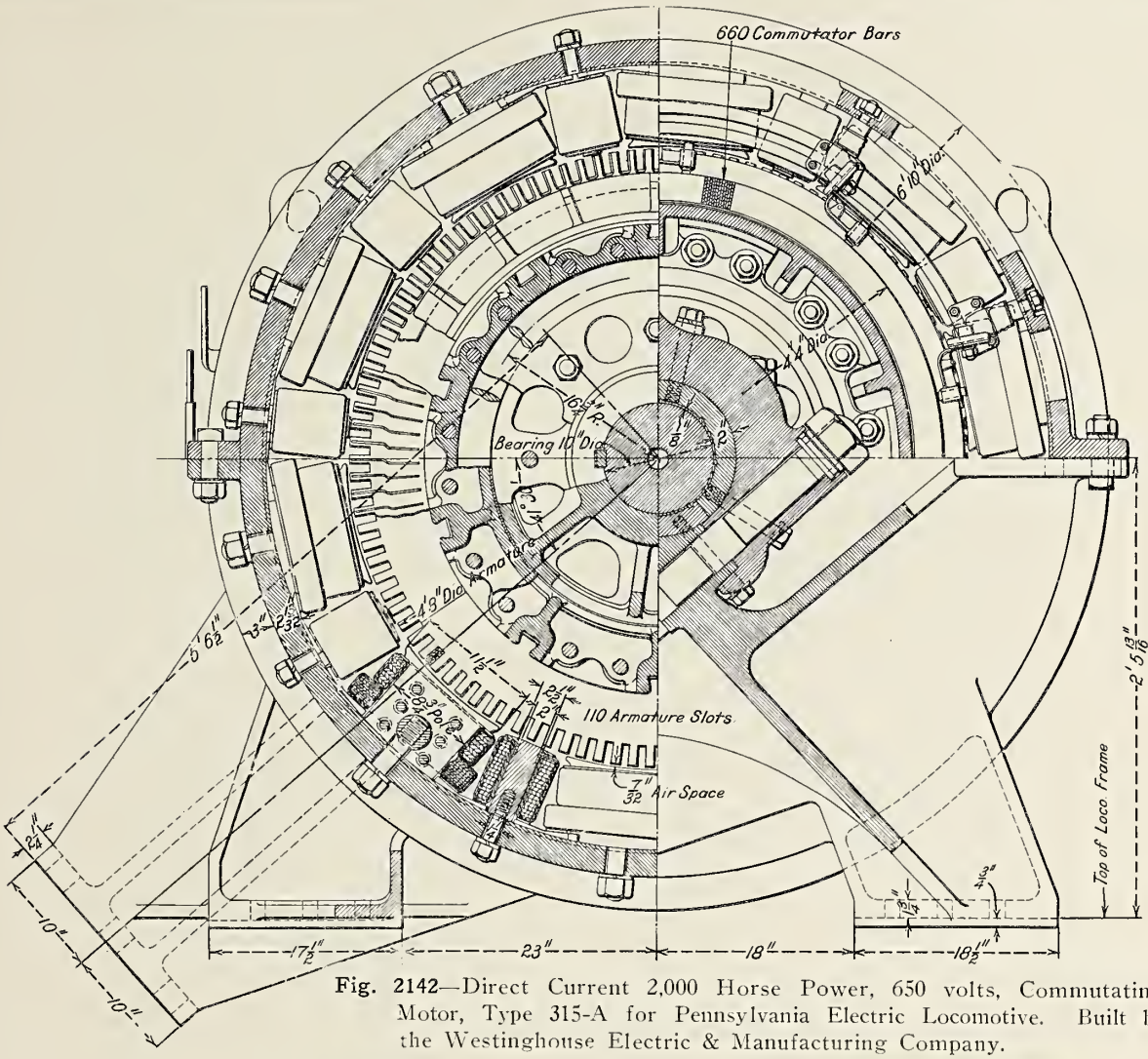

Fig. 2142—Direct Current 2,000 Horse Power, 650 volts, Commutating Motor, Type 315-A for Pennsylvania Electric Locomotive. Built by the Westinghouse Electric & Manufacturing Company.

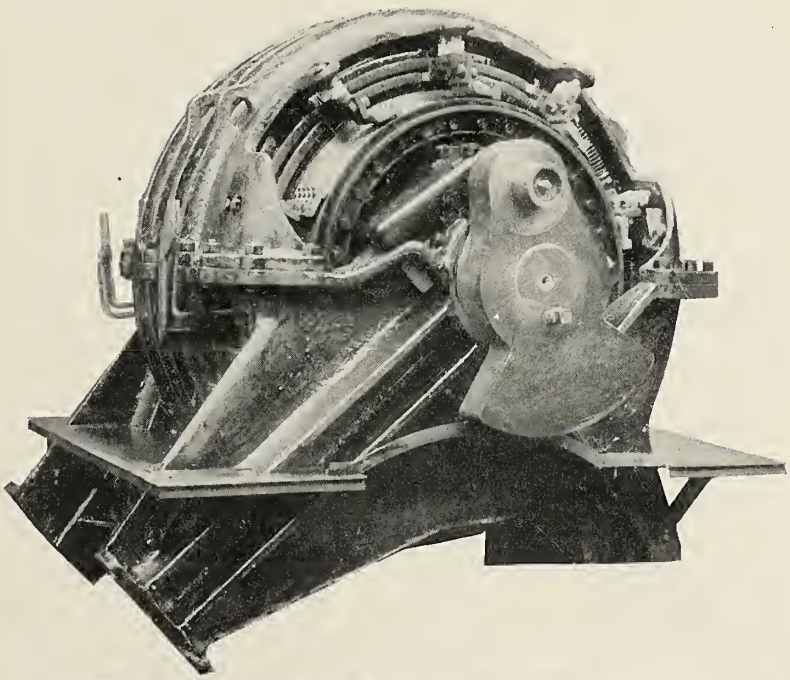

Fig. 2143—General View of Electric Motor Shown in Fig. 2142. Built by the Westinghouse Electric & Manufacturing Company.

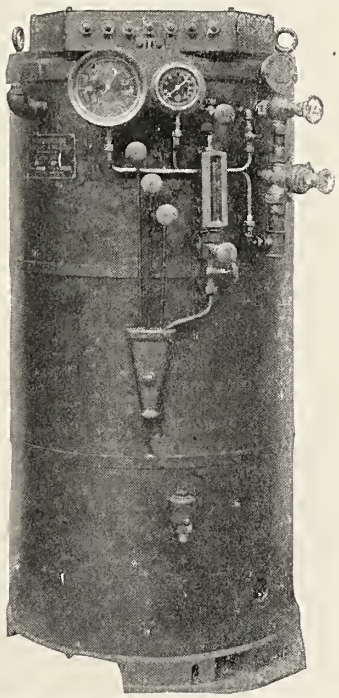

Fig. 2144—Electric Steam Generator 300 K. W., 350 Volts, 100 lbs. Steam Pressure; Westinghouse Electric & Manufacturing Company.

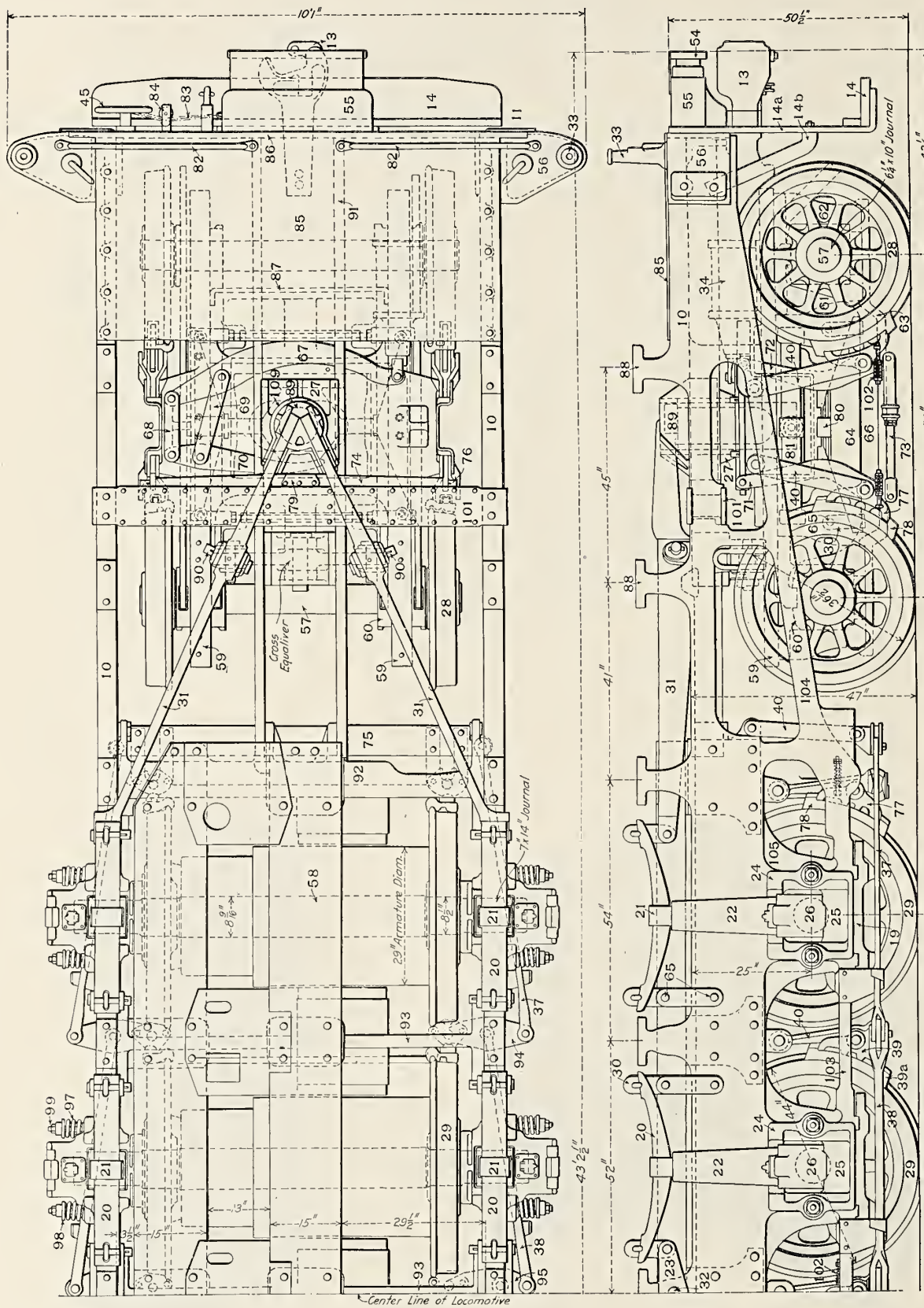

Fig. 2145—Half-Plan and Side Elevation of Running Gear for Electric Locomotive. Built for the New York Central & Hudson River by the General Electric and American Locomotive Companies.

Numbers Refer to Names of Parts on Page 765.

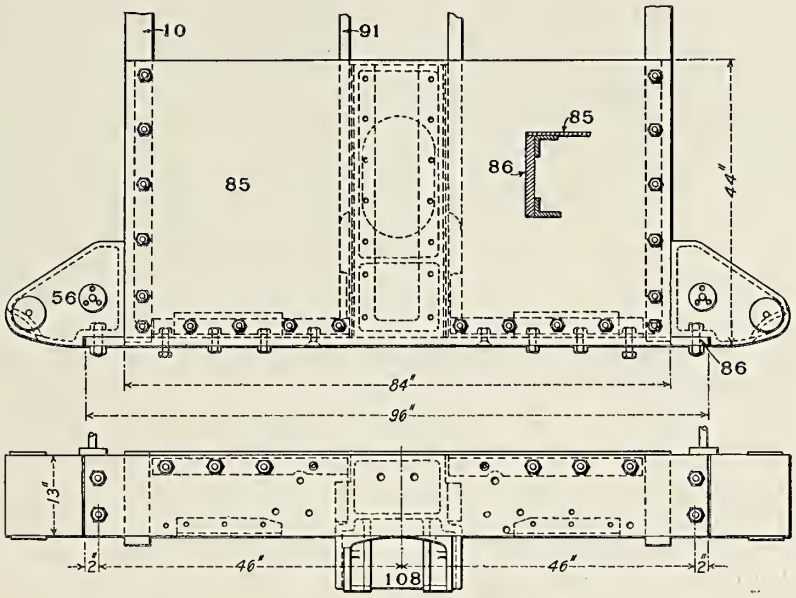

Fig. 2146—Steel End Frame or Bumper.

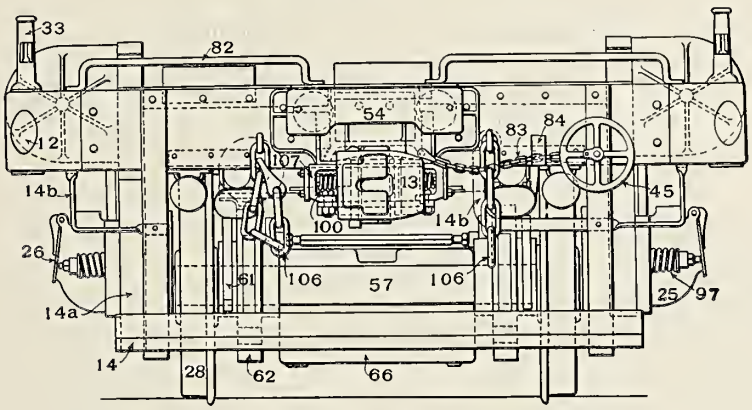

Fig. 2147—End View of Running Gear.

Names of Parts of New York Central Electric Locomotive, Figs. 2145-2147.

10 *Frame*
11 *Bumper*
13 *Coupler*
14 *Bumper Step*
14*a* *Bumper Step Hanger*
14*b* *Bumper Step Hanger Brace*
19 *Pedestal Cap or Binder*
20 *Driver Spring*
21 *Driver Spring Band*
22 *Driver Spring Saddle*
23 *Equalizer*
24 *Pedestal Shoe*
25 *Driving Box*
26 *Driving Box Lid*
27 *Center Pin Guide*
28 *Truck Wheel*
29 *Driving Wheel*
30 *Spring Hanger*
33 *Flag Holder*
37 *Forward Driver Brake Rod*
38 *Second Driver Brake Rod*
39 *Brake Head and Shoe*
39*a* *Brake Shoe*
40 *Brake Hanger*
54 *Buffer Plate*
55 *Buffer Casting*
56 *Bumper End Block*
57 *Truck Axle*
58 *Driving Axle*
59 *Truck Side Frame*
60 *Truck Journal Box*
61 *Truck Equalizer*
62 *Truck Pedestal*
63 *Truck Pedestal Tie-Bar*
64 *Semi-Elliptic Truck Spring*
65 *Spring Hanger Pin*
66 *Truck Transom*
67 *Cylinder Lever*
68 *Cylinder Lever Fulcrum*
69 *Cylinder Lever Connection*
70 *Equalizing Brake Lever*
71 *Live Brake Lever*
72 *Dead Brake Lever*
73 *Brake Lever Connection*
74 *Truck Brake Beam*
75 *Driver Brake Beam*
76 *Brake Beam Trunnion*
77 *Brake Head*
78 *Brake Shoe*
79 *Brake Beam Equalizer Guide*
80 *Truck Spring Seat*
81 *Truck Centering Spring*
82 *Grab Iron*
83 *Uncoupling Chain*
84 *Uncoupling Chain Sheave*
85 *Deck Plate*
86 *End Plate*
87 *Truck Pedestal Crosstie*
88 *Cab Support*
89 *Truck Center Pin*
90 *Truck Equalizer Fulcrum Pin*
91 *Center Draft Beams*
92 *End Transom and Pole Piece*
93 *Intermediate Transom and Pole Piece*
94 *Front Brake Equalizer*
95 *Intermediate Brake Equalizer*
96 *Rear Brake Equalizer*
97 *Lateral Motion Spring*
98 *Lateral Motion Spring Cap*
99 *Lateral Motion Spring Bolt*
100 *Coupler Centering Springs*
101 *Body Bolster*
102 *Brake Regulating Spring*
103 *Lower Frame Rail*
104 *Frame Brace*
105 *Frame Pedestal*
106 *Safety Coupling Chain*
107 *Coupler Centering Spring Yoke*
108 *Draft Gear Casting*
109 *Center Pin Guide*

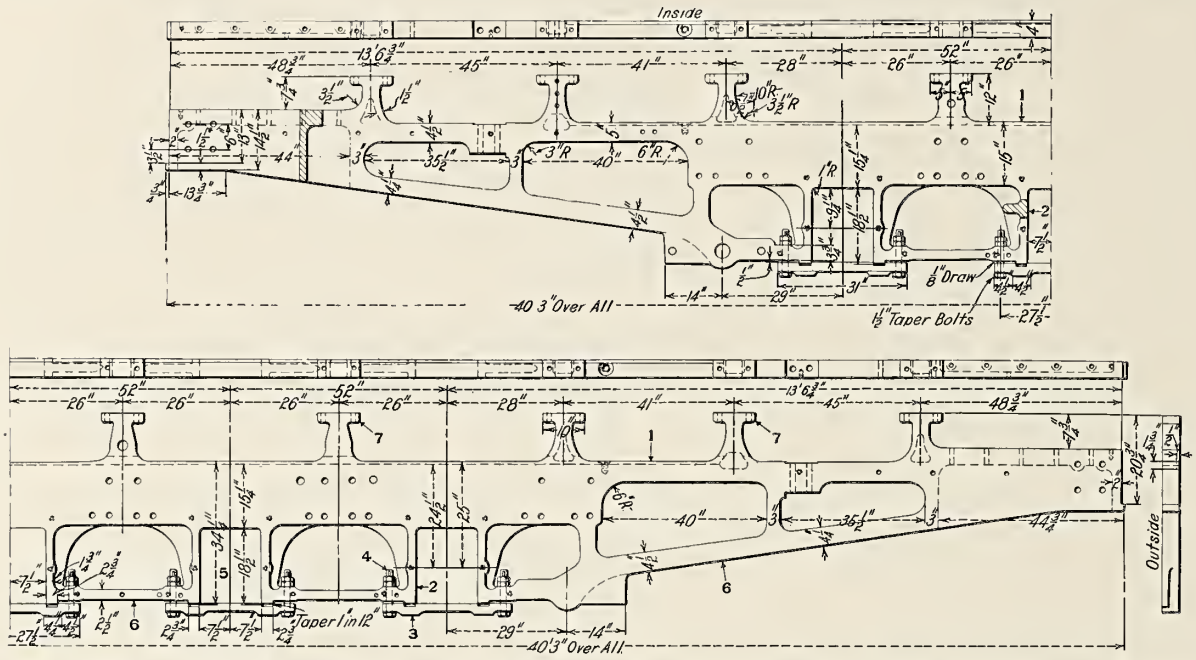

Fig. 2148—Cast Steel Frame for New York Central Electric Locomotive. Built by the General Electric and American Locomotive Companies.

Names of Parts of Frame, Fig. 2148.

1 *Top Rail*
2 *Pedestal*
3 *Pedestal Cap or Binder*
4 *Pedestal Bolt*
5 *Pedestal Jaw*
6 *Bottom Rail*
7 *Cab Support*
9 *Brake Lever Pin Hole*

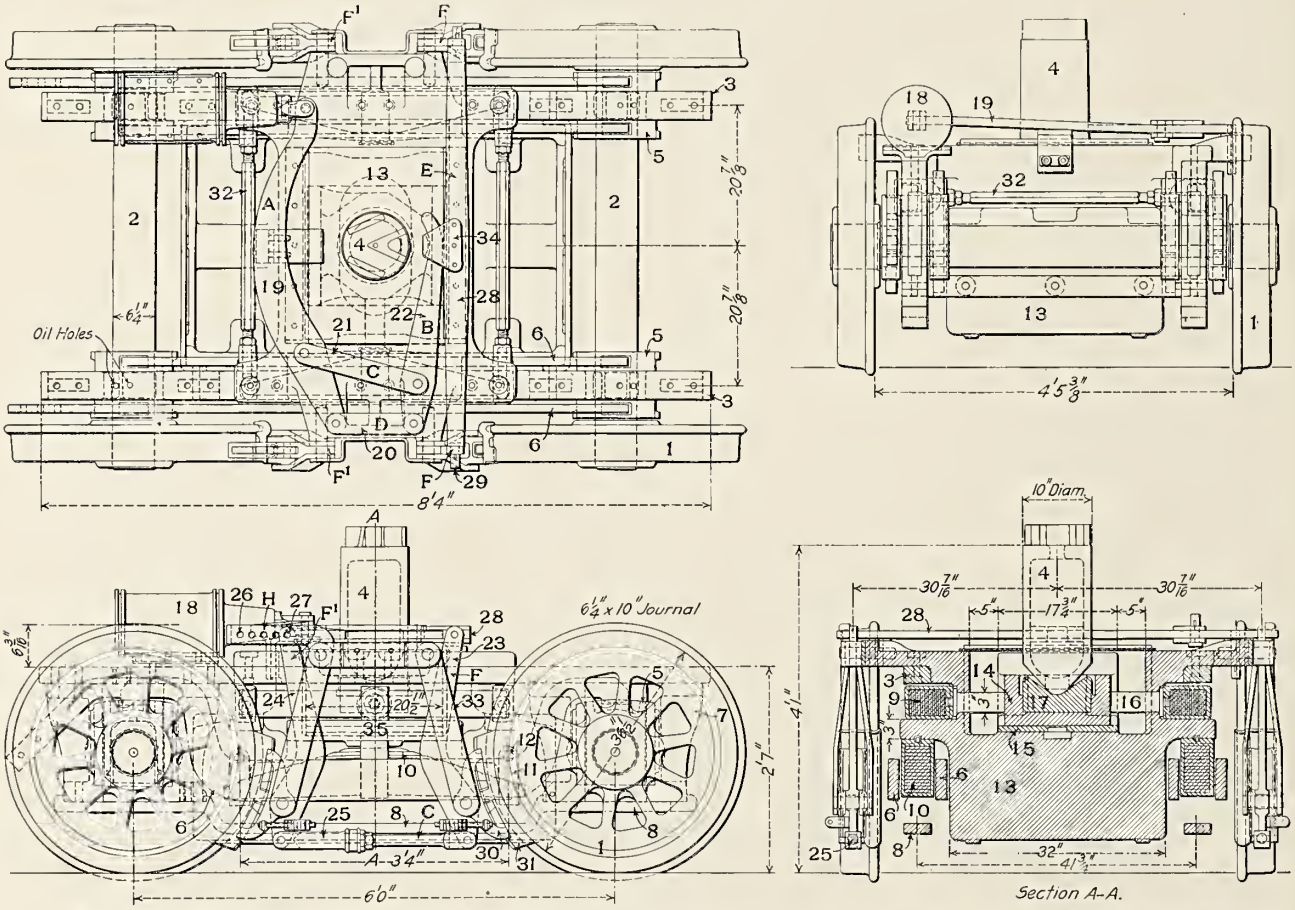

Fig. 2149—Four-Wheel Truck for Electric Locomotive. Built for the New York Central by the General Electric and American Locomotive Companies.

Numbers Refer to Names of Parts at Bottom of Page 767.

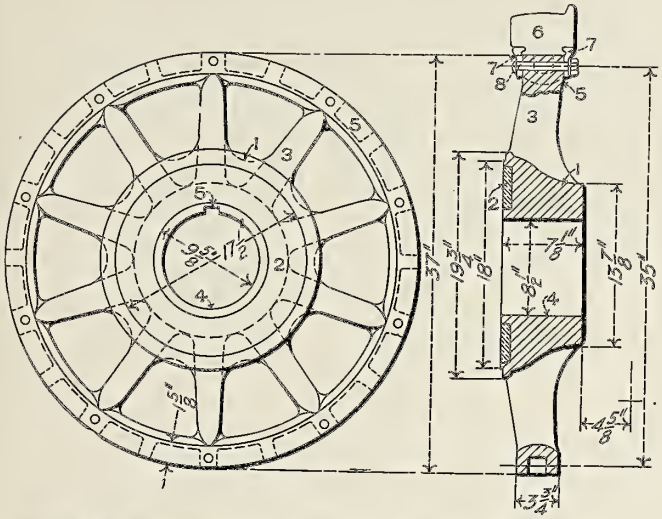

Fig. 2150—Cast Steel Driving Wheel Center for New York Central Electric Locomotive.

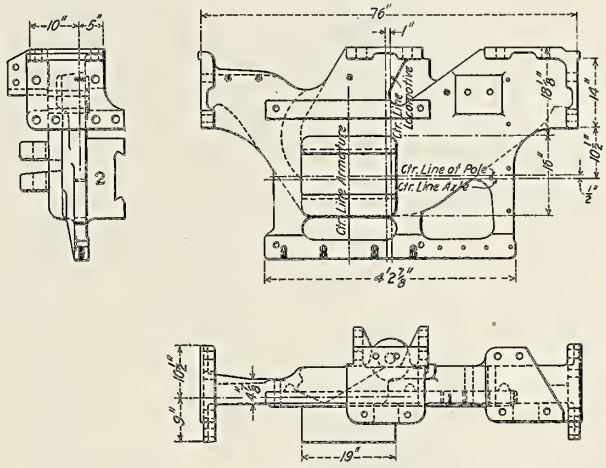

Fig. 2151—Frame Transom or Crossties and Field Magnet Core of New York Central Electric Locomotive.

Names of Parts of Driving Wheel Fig. 2150.

1 *Hub*
2 *Hub Liner*
3 *Spoke*
4 *Wheel Fit for Axle*
5 *Key Way*
6 *Tire*
7 *Retaining Ring*
8 *Retaining Ring Bolt*

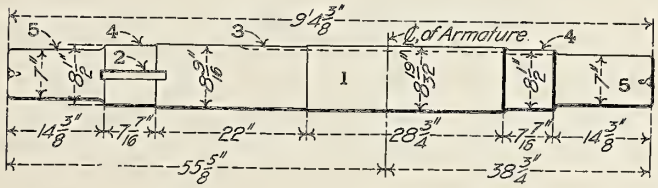

Fig. 2152—Driving Axle for New York Central Electric Locomotive.

Names of Parts of Axle, Fig. 2152.

1 *Center*
2 *Key Way for Wheel Key*
3 *Key Way for Armature*
4 *Wheel Seat*
5 *Journal*

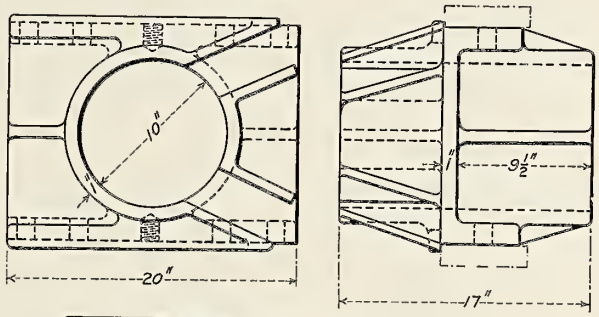

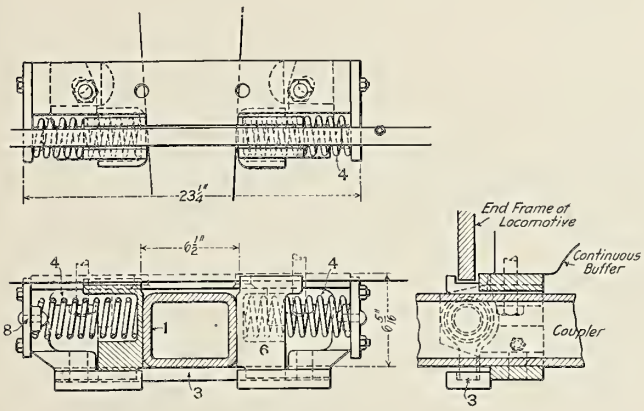

Fig. 2153—Draw Gear Centering Device.

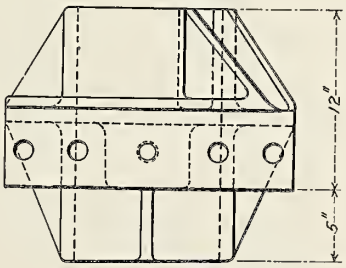

Fig. 2154—Center Pin Guide.

Names of Parts of Four-Wheel Truck, Fig. 2149.

1 *Wheel*
2 *Axle*
3 *Side Frame*
4 *Center Pin*
5 *Journal Box*
6 *Equalizer*
7 *Pedestal*
8 *Pedestal Tie Bar*
9 *Centering Spring*
10 *Semi-Elliptic Spring*
11 *Spring Hanger*
12 *Spring Hanger Pin*
13 *Transom Casting*
14 *Center Plate*
15 *Center Plate Washer*
16 *Center Plate Centering Stud*
17 *Center Bearing Plate*
18 *Brake Cylinder*
19 *Cylinder Lever*
20 *Cylinder Lever Fulcrum*
21 *Cylinder Lever Connection*
22 *Equalizing Brake Lever*
23 *Live Brake Lever*
24 *Dead Brake Lever*
25 *Brake Lever Connection*
26 *Dead Brake Lever Guide*
27 *Dead Brake Lever Pin*
28 *Brake Beam*
29 *Brake Beam Trunnion*
30 *Brake Head*
31 *Brakeshoe*
32 *Brake Head Tie Rod*
33 *Brake Hanger*
34 *Brake Beam Equalizer Guide*
35 *Spring Seat*

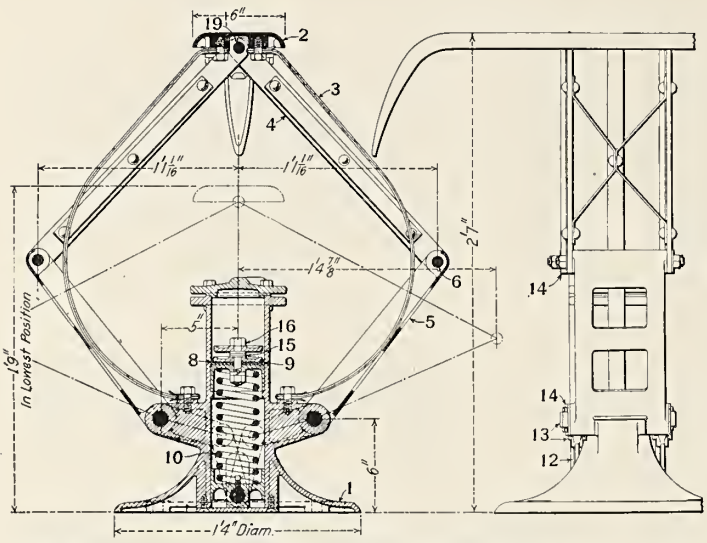

Fig. 2155—Pantagraph or Overhead Trolley Contact for New York Central Electric Locomotive.

Names of Parts of the Pantagraph, Fig. 2155.

1 *Cylinder*
2 *Shoe*
3 *Shunt*
4 *Upper Lever*
5 *Lower Lever*
6 *Shaft*
8 *Piston Leather*
9 *Piston Leather Expander*
10 *Spring*
12 *Links*
13 *Shaft*
14 *Washer*
15 *Washer Hard Rubber*
16 *Piston Bolt*
19 *Washer*

Names of Parts of Third Rail Shoe, Fig. 2156.

1 *Shoe*
2 *Shoe Carrier or Bracket*
4 *Key for Shoe Pin*
5 *Spring*
6 *Corrugated Back Plate*
7 *Conductor*
8 *Connection to Locomotive Circuits*
9 *Connection to Shoe*
10 *Bracket Bolt*
11 *Lower Bracket Bolt*
12 *Third Rail Shoe Beam*
13 *Third Rail Shoe Beam Bracket*
14 *Third Rail Shoe Beam Tie Bar*
15 *Third Rail Shoe Beam End Bracket*
16 *Third Rail Shoe Beam Crosstie Bracket*
17 *Truck Equalizer*
18 *Brakeshoe*
19 *Brakehead*
20 *Brake Hangers*
21 *Dead Brake Lever*
22 *Semi-Elliptic Truck Spring*

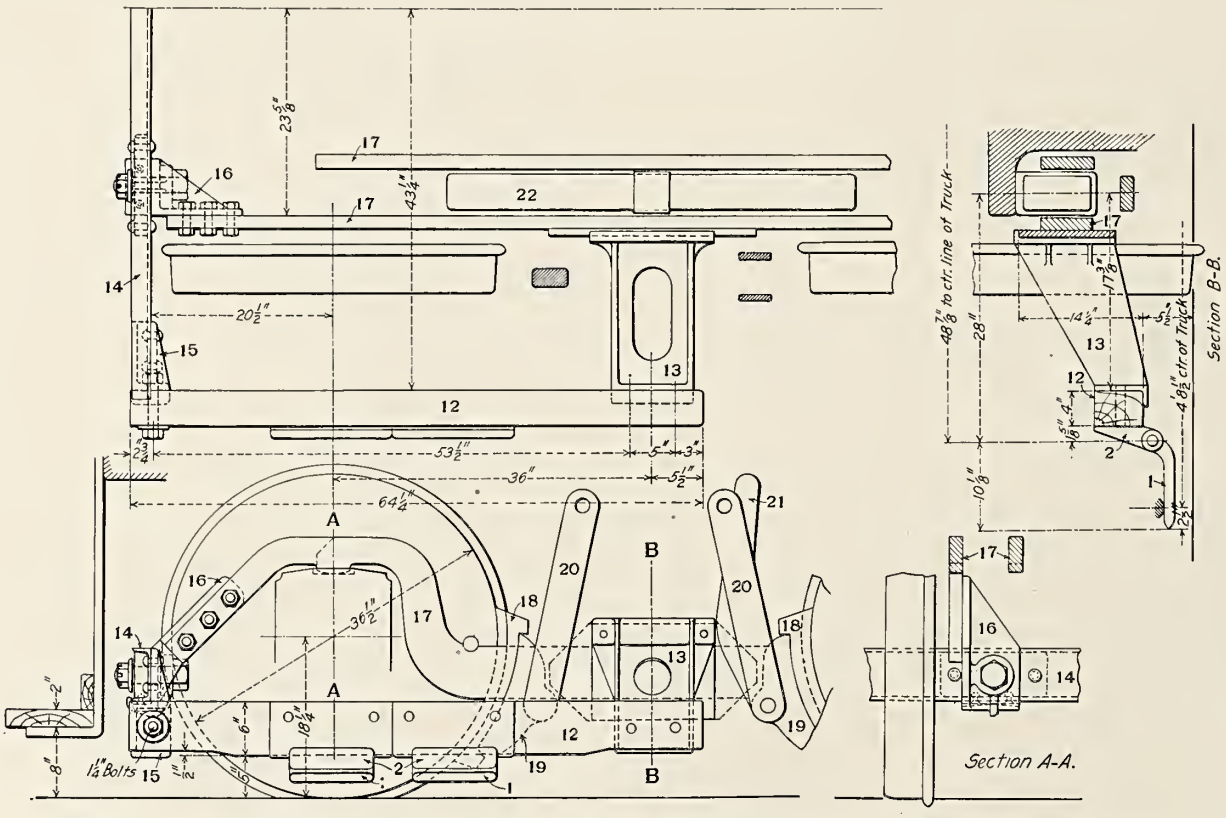

Fig. 2156—Third Rail Shoe on Four-Wheel Truck for New York Central Electric Locomotive.

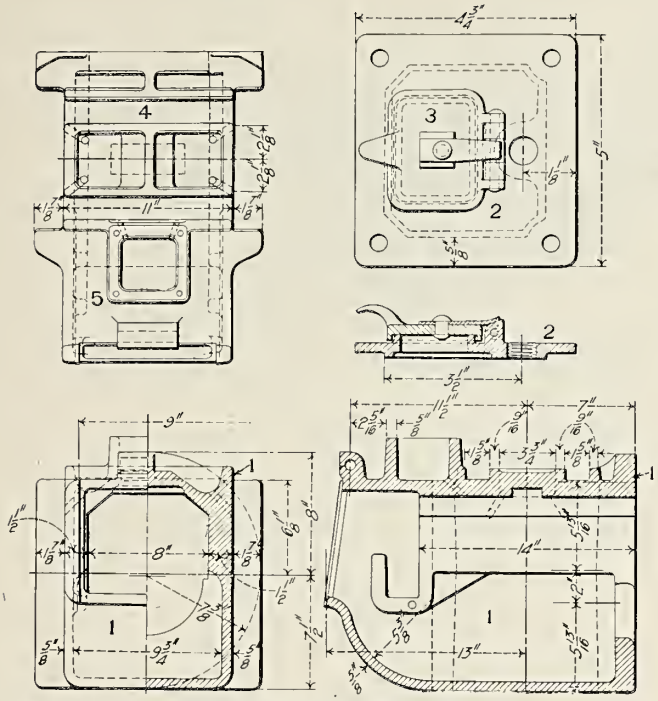

Fig. 2157—Driving Axle Journal Box for New York Central Electric Locomotive.

Names of Parts of Driving Box, Fig. 2157.

1 *Box*
2 *Cover*
3 *Lid on Cover*
4 *Plan of Top*
5 *Front*

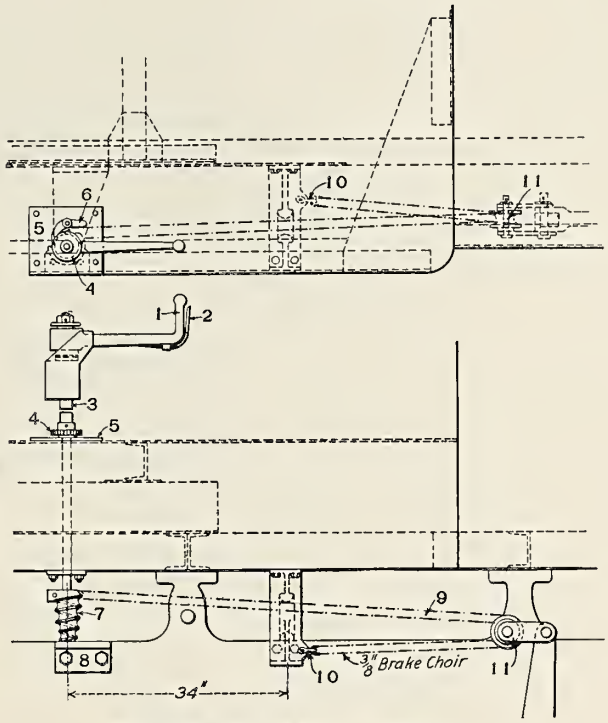

Fig. 2158—Hand Brake Rigging.

Names of Parts of Hand Brake, Fig. 2158.

1 *Brake Handle*
2 *Brake Latch Handle*
3 *Brake Staff*
4 *Brake Ratchet*
5 *Brake Ratchet Plate*
6 *Brake Pawl*
7 *Brake Spool*
8 *Brake Staff Step*
9 *Brake Chain*
10 *Brake Chain Clevis*
11 *Brake Chain Pulley*

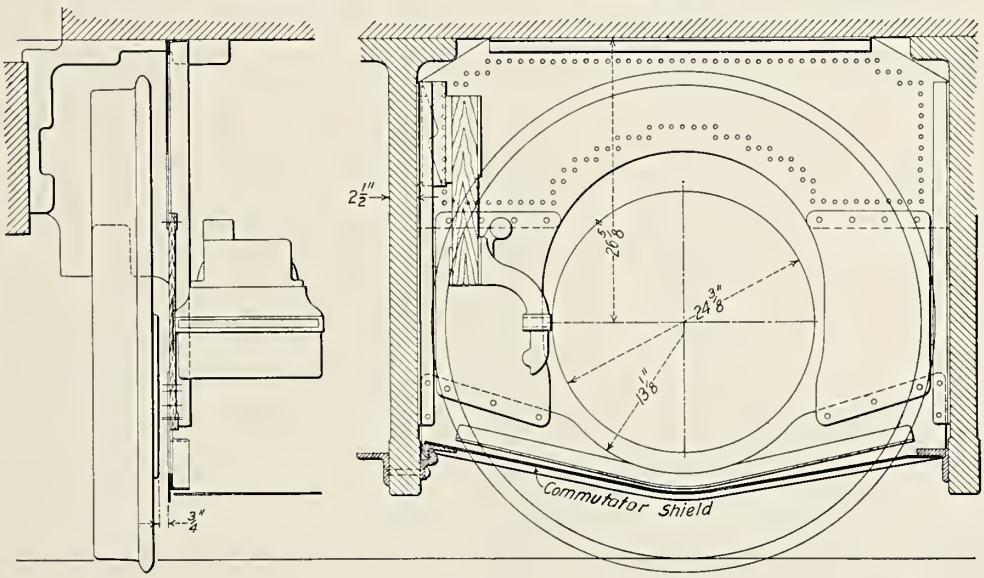

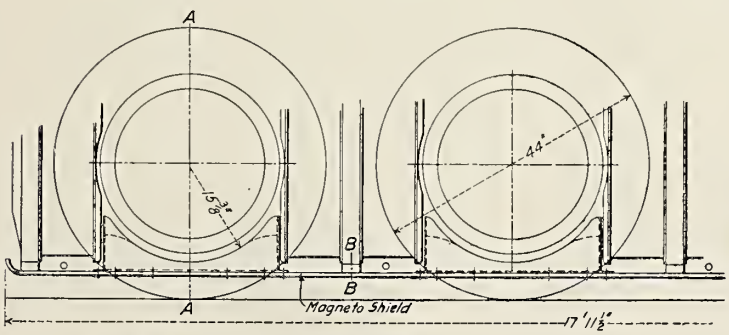

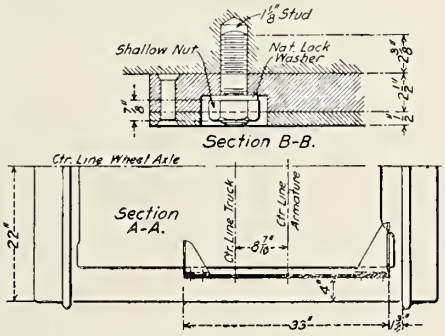

Fig. 2159—Commutator and Magneto Shields for New York Central Electric Locomotive.

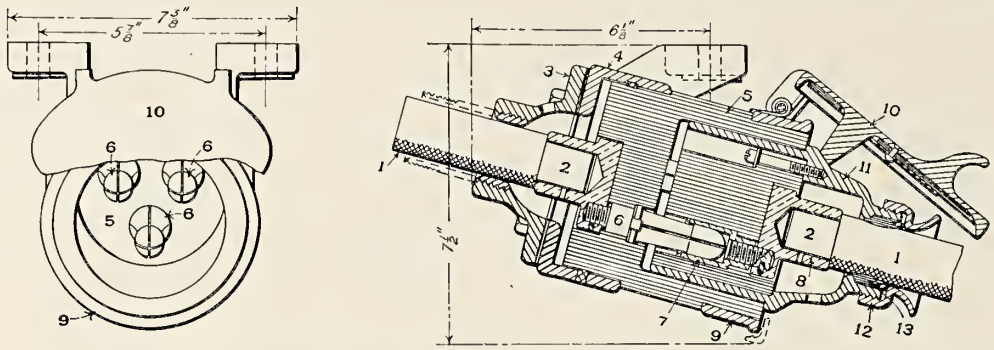

Fig. 2160—Conductor Terminals for New York Central Electric Locomotive.

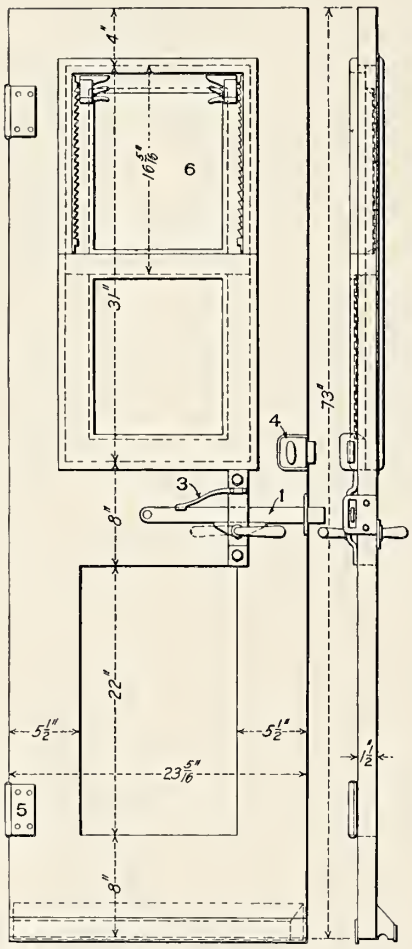

Fig. 2161—Cab Door and Window.

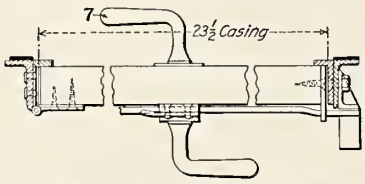

Fig. 2162—Cab Door Latch.

Names of Parts of Conductor Terminals, Fig. 2160.

1 *Flexible Conducting Cable or Jumper*
2 *Cable Terminal*
3 *Socket Cap*
4 *Socket Flange*
5 *Insulation*
6 *Locomotive Terminal Plug*
7 *Jumper Socket*
8 *Terminal Head*
9 *Rim*
10 *Terminal Lid*
11 *Insulation on Jumper Terminal*
12 *Flange on Jumper Terminal*
13 *Insulation*

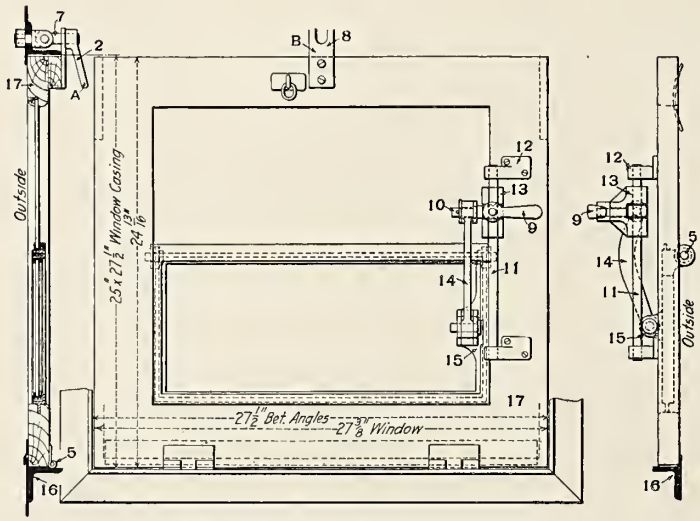

Fig. 2163—Cab Lookout Window.

Figs. 2161-2163 are Cab Details of New York Central Electric Locomotive.

Names of Parts of Cab Door and Lookout Window, Figs. 2161-2163.

1 *Latch*
2 *Latch Handle*
3 *Latch Spring*
4 *Lock*
5 *Hinge*
6 *Sash*
7 *Latch Handle Stud*
8 *Latch Hasp*
9 *Sash Clamp Handle*
10 *Sash Clamp Handle Stem*
11 *Slide*
12 *Slide Bracket*
13 *Clamp*
14 *Connecting Rod*
15 *Sash Bracket*
16 *Window Frame*
17 *Sash Frame*

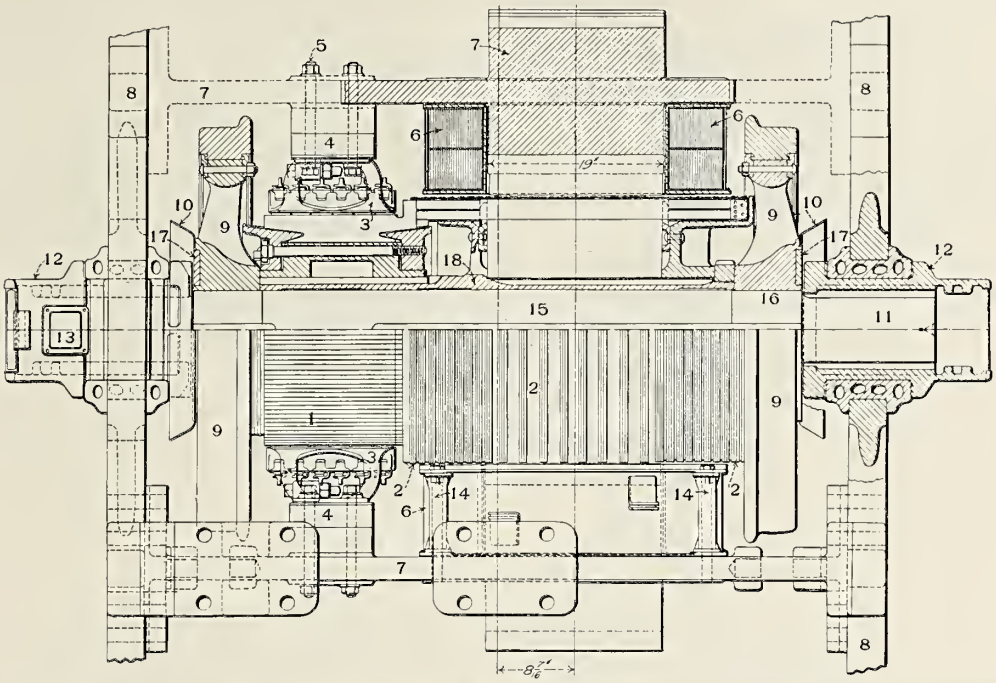

Fig. 2164—Longitudinal Section Through Motor of New York Central Electric Locomotive.

Names of Parts of Motor, Fig. 2164.

1 *Commutator*
2 *Armature*
3 *Brush Holder*
4 *Brush Holder Support*
5 *Brush Holder Support Bolt*
6 *Field Magnet Coil*
7 *Frame Crosstie and Field Magnet Core*
8 *Side Frame*
9 *Driving Wheel*
10 *Oil Guard*
11 *Driving Axle Journal*
12 *Driving Axle Box*
13 *Small Lid on Box Cover*
14 *Field Coil Bolt*
15 *Driving Axle*
16 *Wheel Seat*
17 *Hub Liner*
18 *Armature Sleeve*

Names of Parts of Motor, Fig. 2165.

1 *Top Frame Rail*
2 *Frame Crosstie and Field Magnet Core*
3 *Soft Iron Pole Face*
4 *Field Magnet Coil*
5 *Commutator*
6 *Armature*
7 *Armature Coil*
8 *Brush Holder*
9 *Brush Holder Support*
10 *Motor Lead or Conductor*
11 *Brush Holder Support Bolt*
12 *Exterior of Field Magnet Coil*
13 *Field Coil Bolt*
14 *Driving Axle*
15 *Driving Wheel*

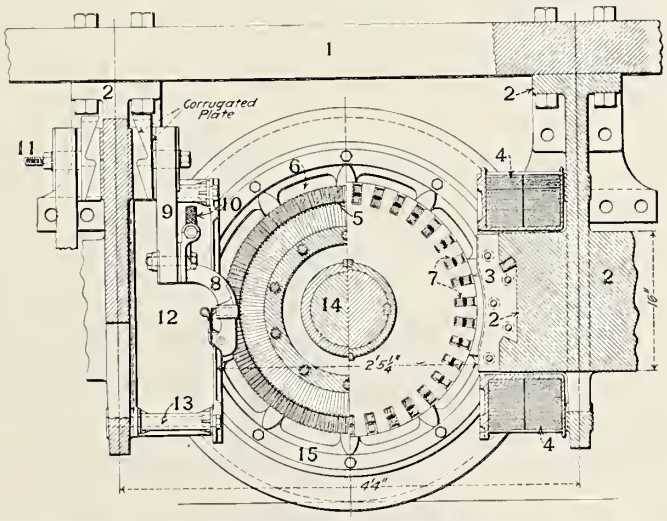

Fig. 2165—Transverse Section Through Motor of New York Central Electric Locomotive.

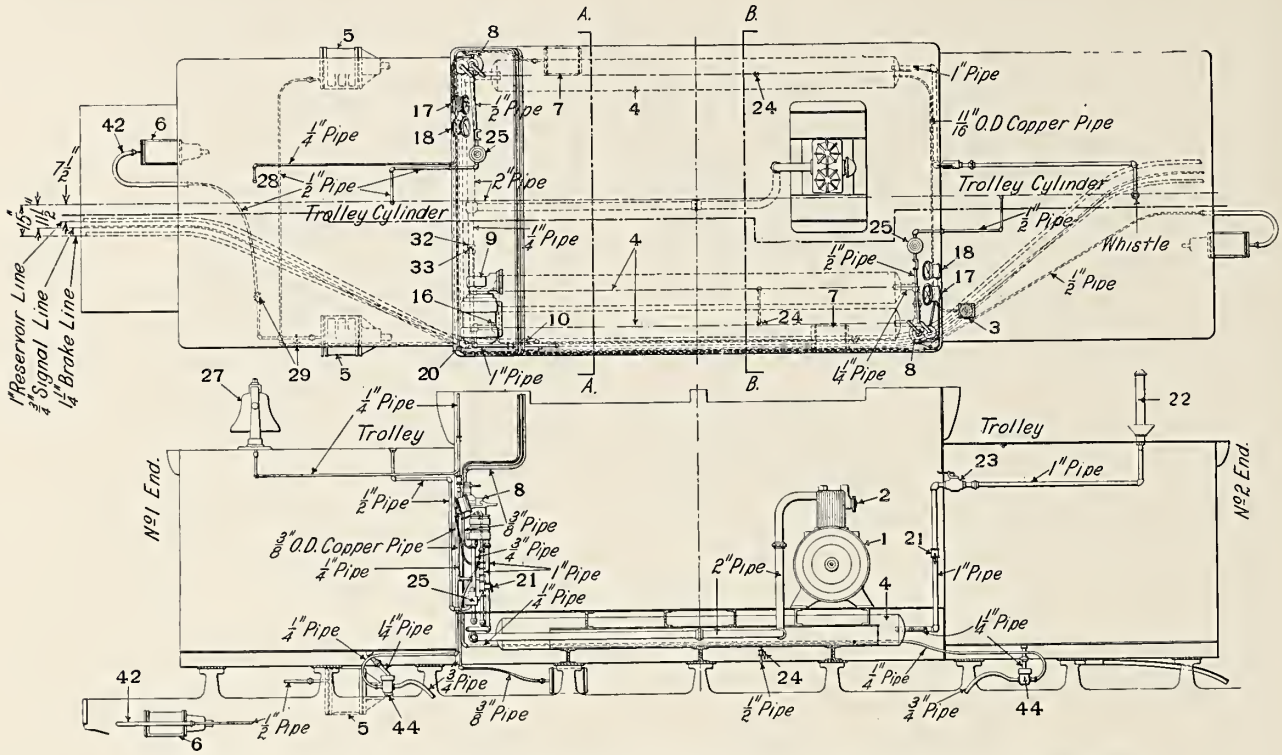

Fig. 2166—Air Brake and Auxiliary Piping on New York Central Electric Locomotive.

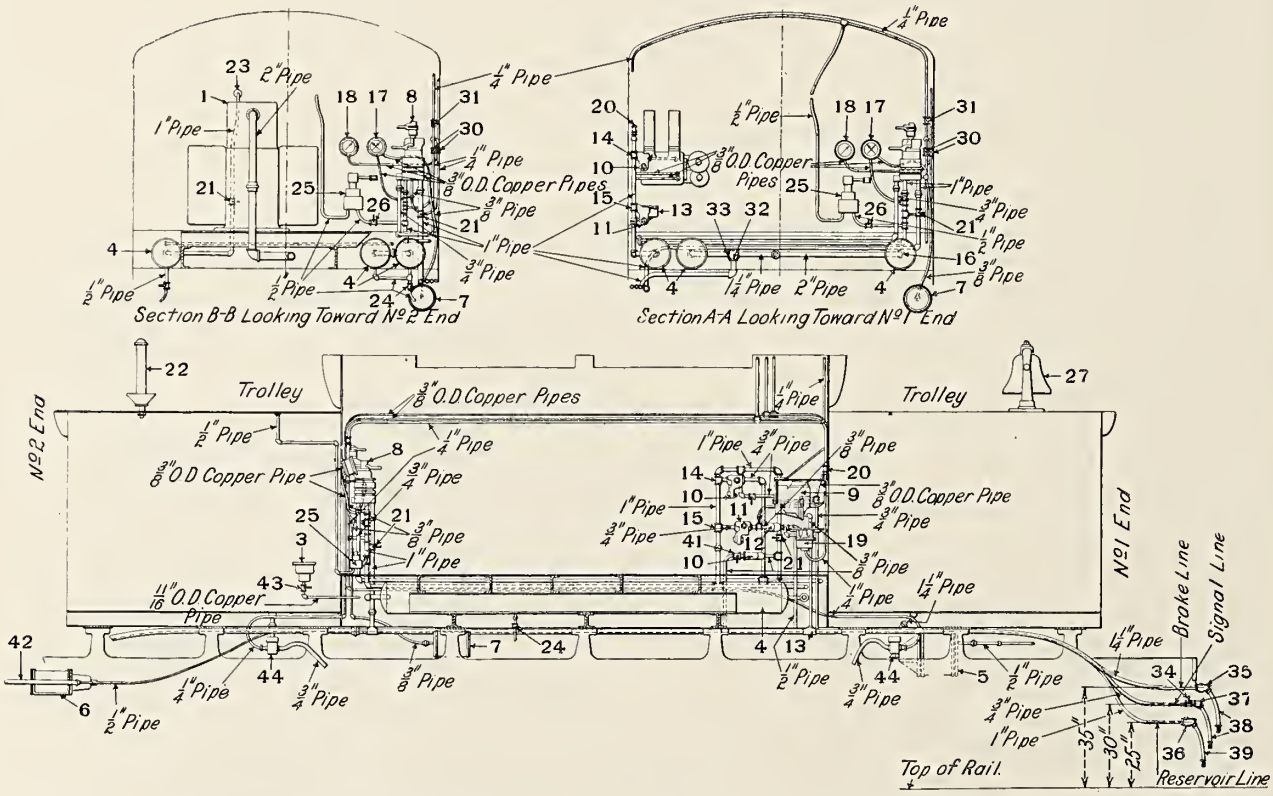

Fig. 2167—Air Brake and Auxiliary Piping on New York Central Electric Locomotive.

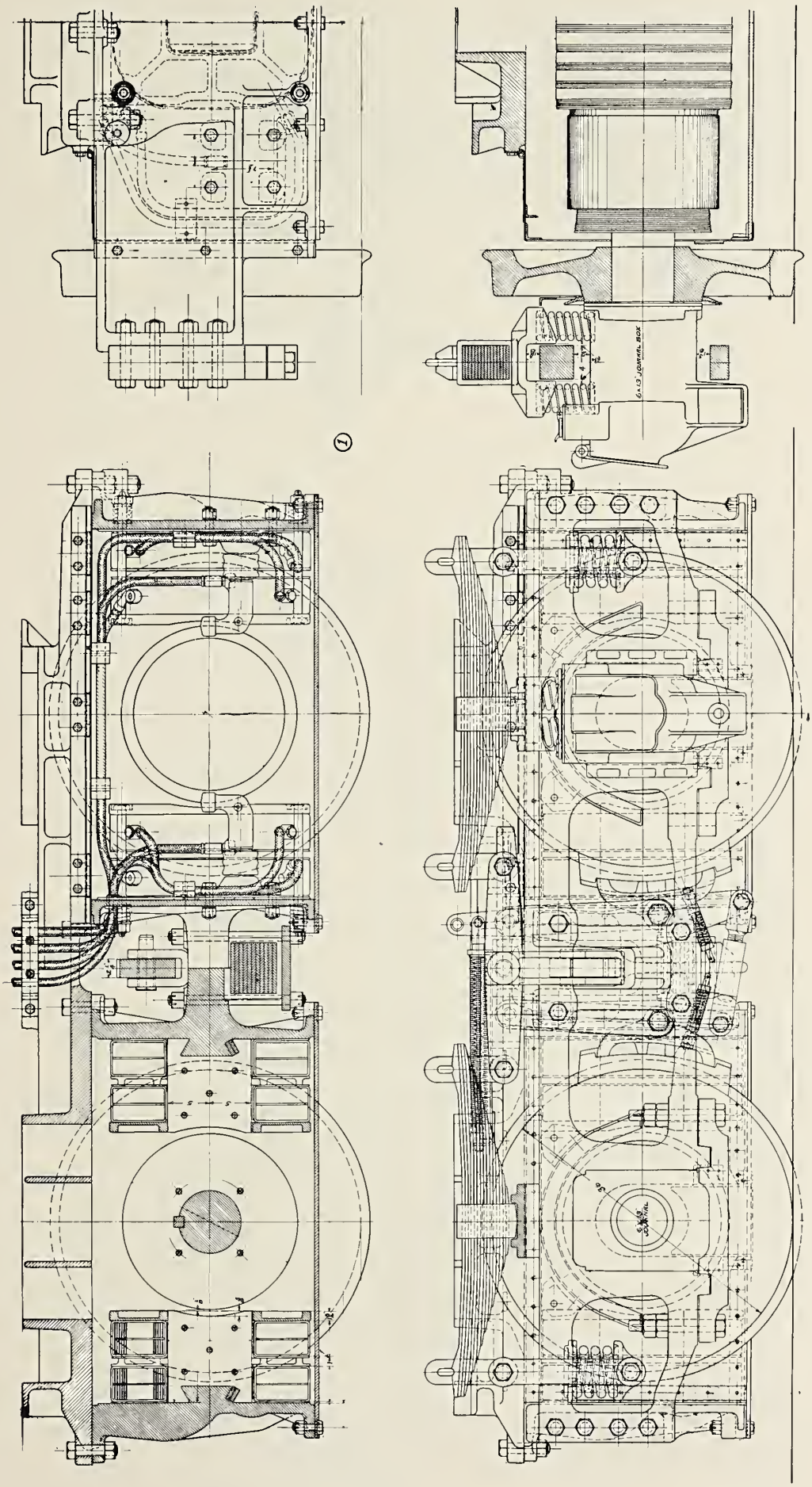

Fig. 2168—Rigid Truck, Electric Locomotive Type 4444-E-250-8GE91-600V. Built for the New York Central by the General Electric and American Locomotive Companies.

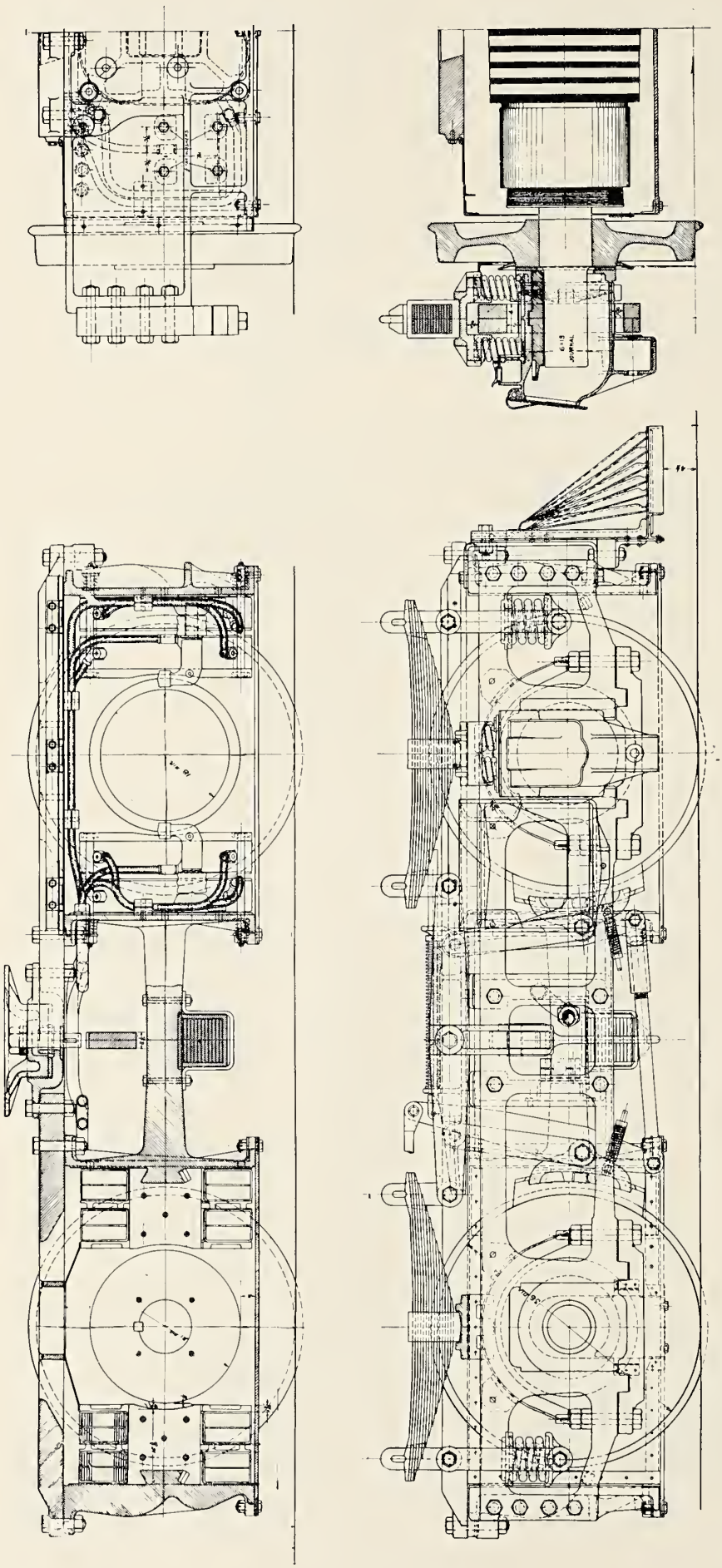

Fig. 2169—Leading Truck, Electric Locomotive Type 4444-E-250-8GE91-600V. Built for the New York Central by the General Electric and American Locomotive Companies.

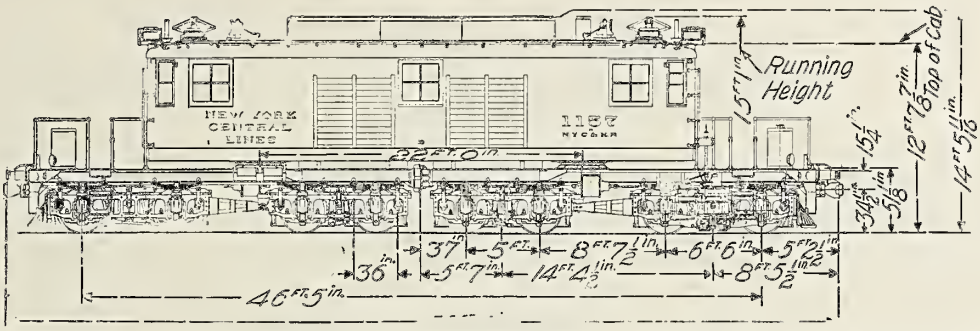

Fig. 2170—Electric Locomotive Type 4444-E-250-8GE91-600V. Built for the New York Central by the General Electric and American Locomotive Companies.

(See Fig. 2123 for general view.)

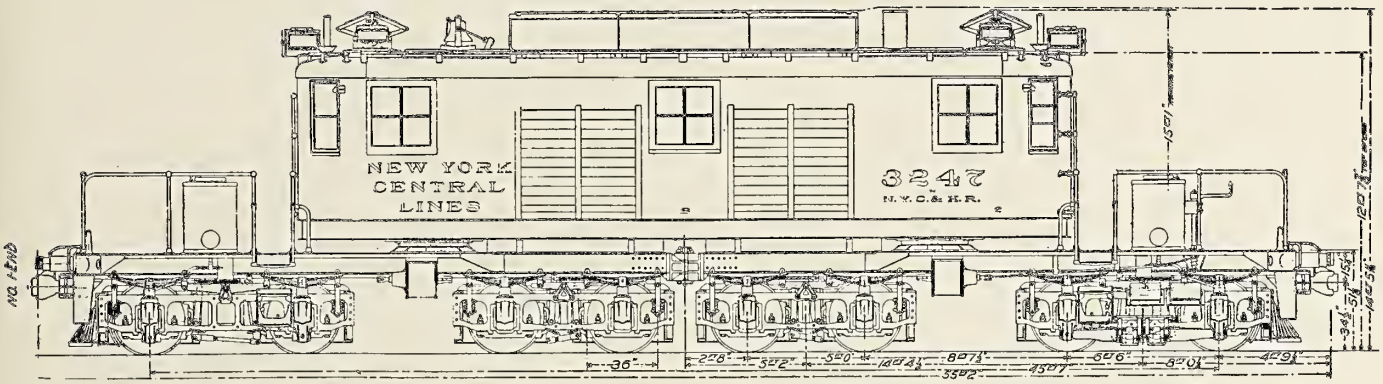

Fig. 2171—Electric Locomotive, 600 Volt Direct Current, Weight 200,000 lb. Built for the New York Central by the General Electric and American Locomotive Companies.

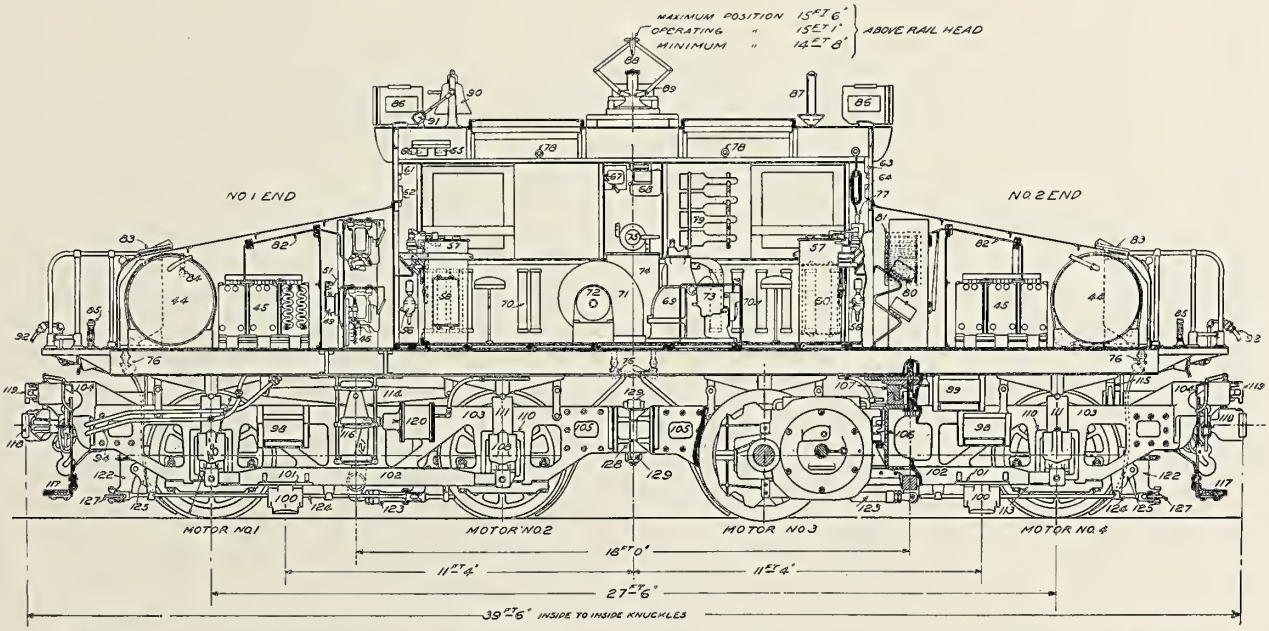

Fig. 2172—General Arrangement of Detroit River Tunnel Electric Locomotive. Built for the Michigan Central by the General Electric Company.

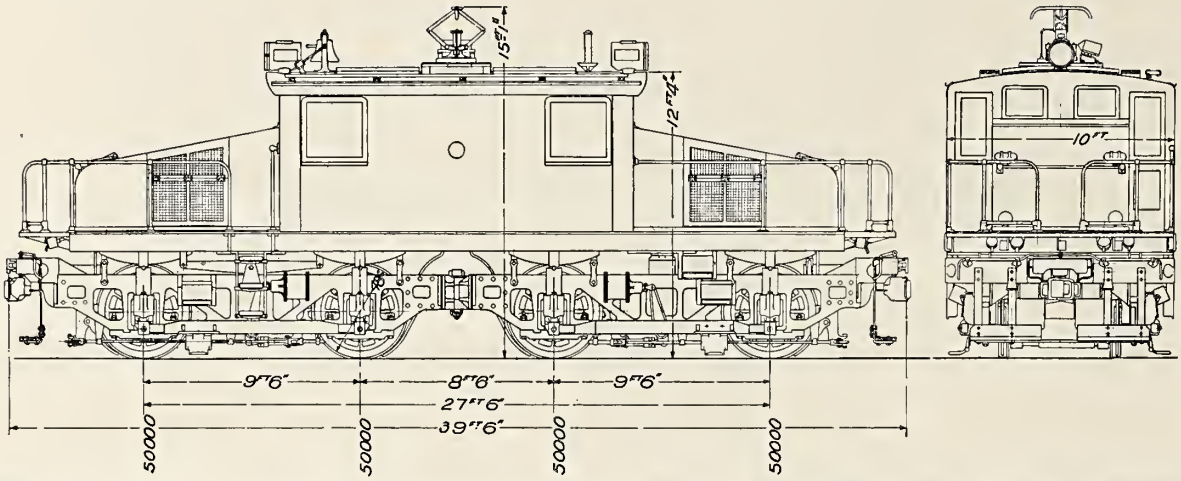

Fig. 2173—General Elevation of Detroit River Tunnel Electric Locomotive Built for the Michigan Central by the General Electric Company. Four Motors, Type 209; H. P., 300; Control, Type M Multiple Unit. Tractive Effort, 60,000 lbs. Weight, 100 Tons.

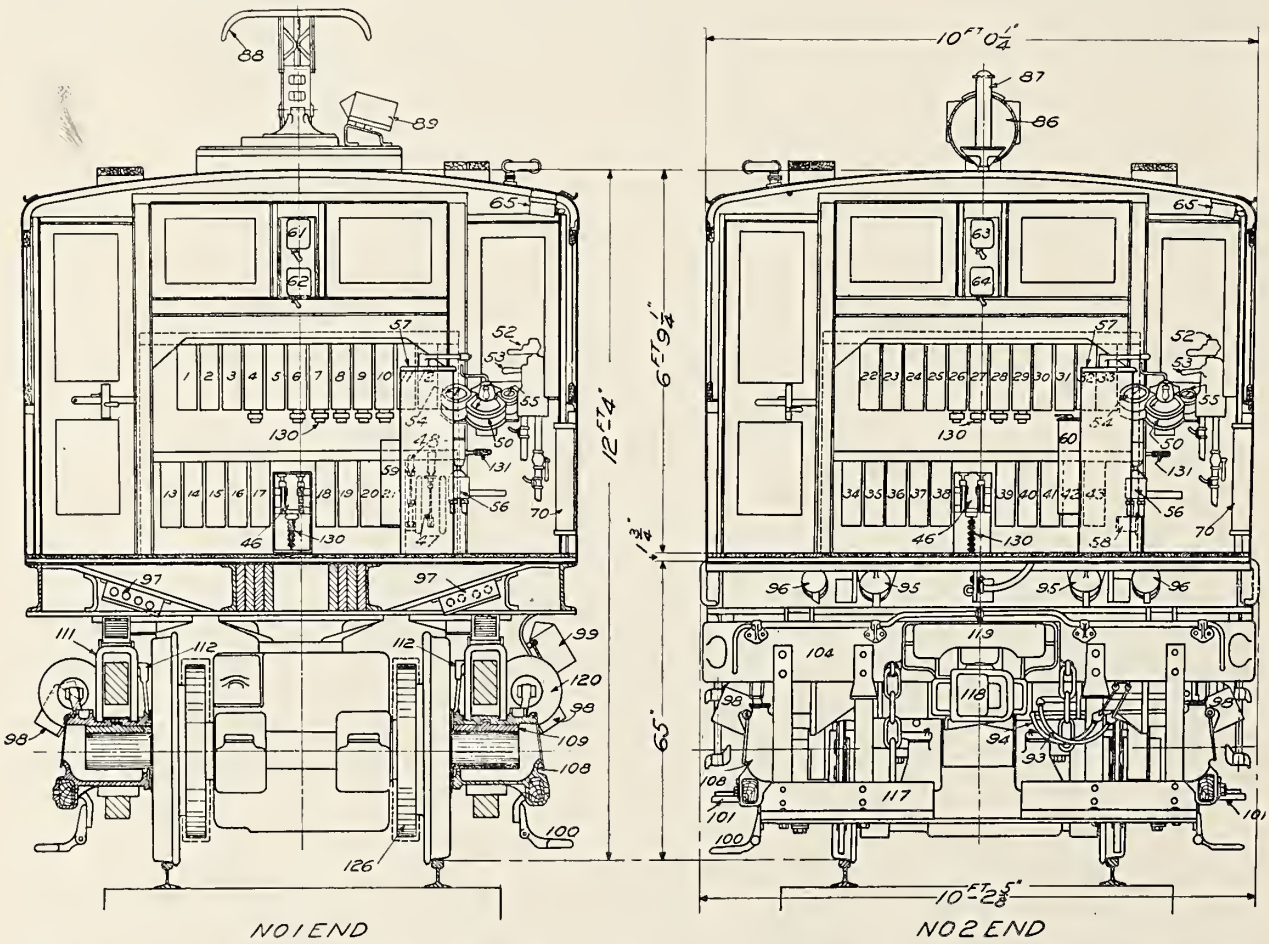

Fig. 2174—Cross Sections of Detroit River Tunnel Electric Locomotive Shown in Figs. 2172-2173. Built for the Michigan Central by the General Electric Company.

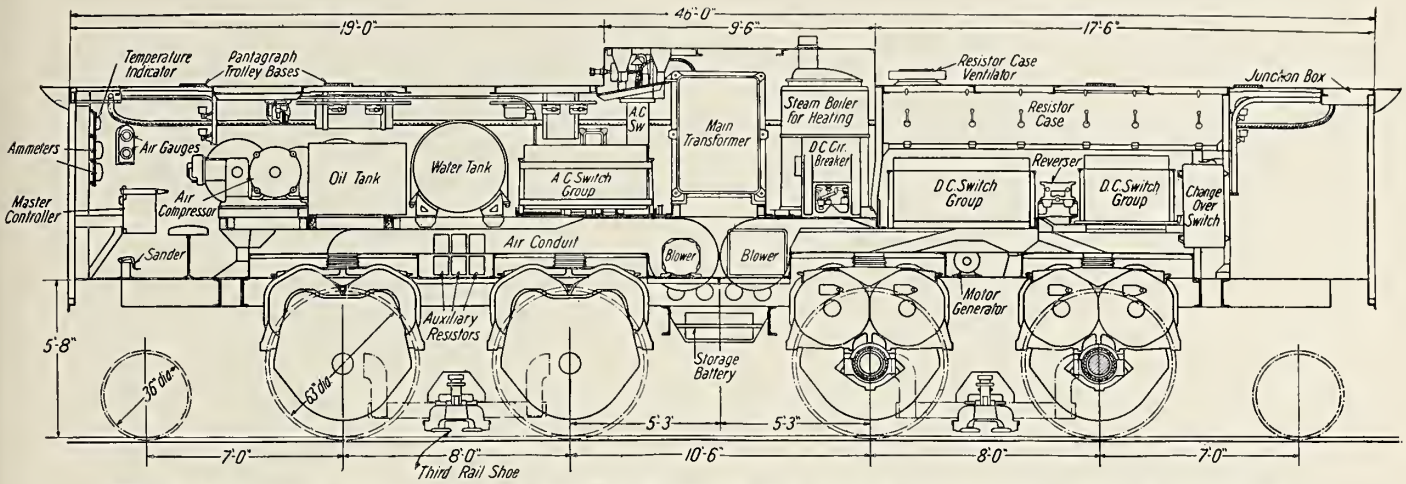

Fig. 2175—General Arrangement of Baldwin-Westinghouse Electric Locomotive. Built for the New York, New Haven & Hartford.

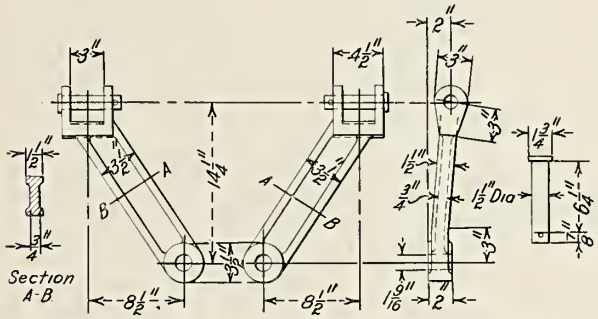

Fig. 2176—Radius Bar for Electric Locomotive Truck.

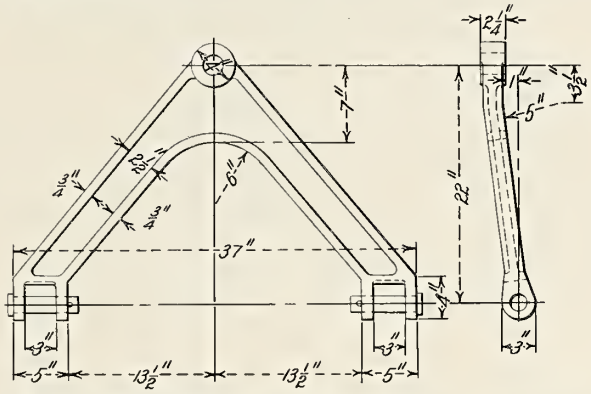

Fig. 2177—Radius Bar for Electric Locomotive Truck.

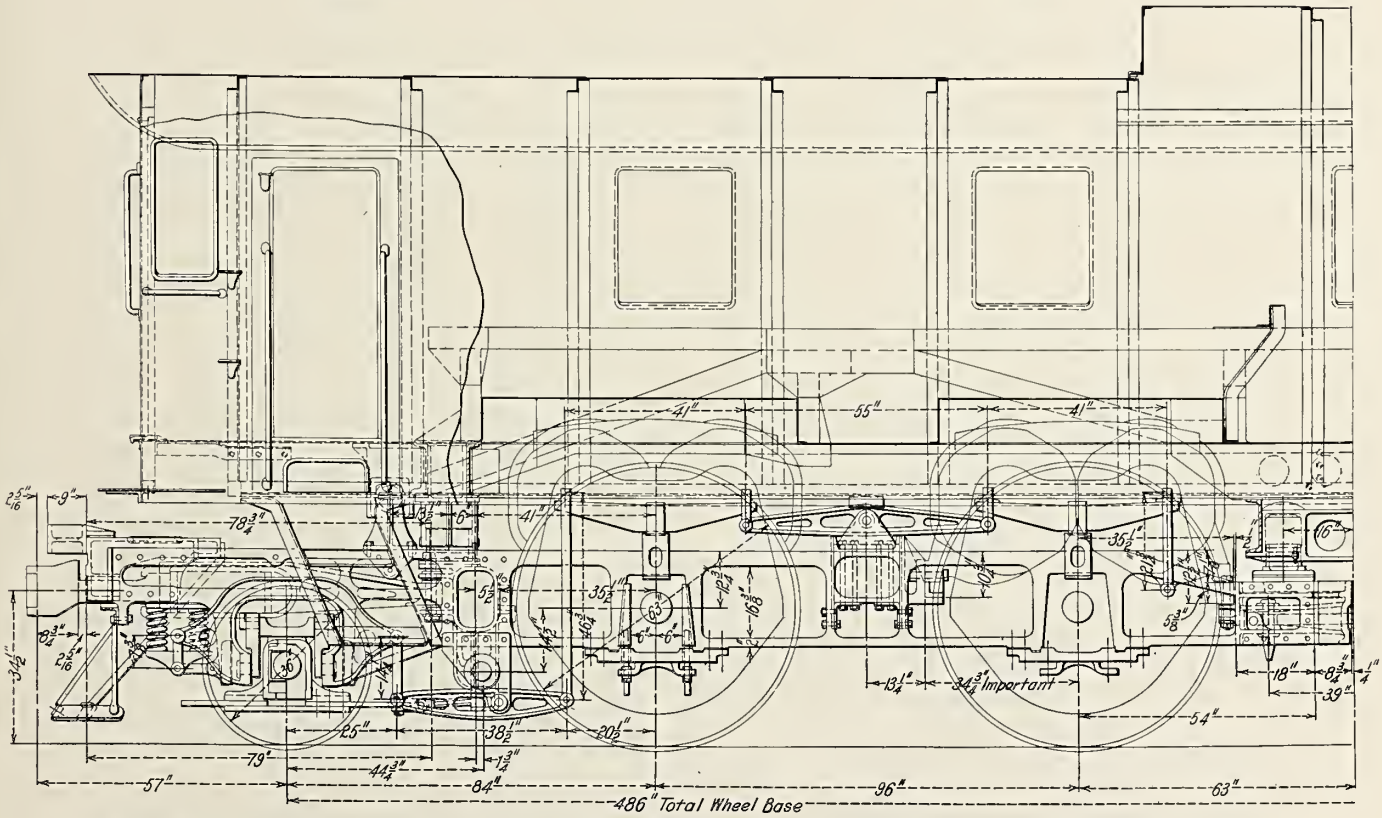

Fig. 2178—General Arrangement of Spring Rigging and Cab on Baldwin-Westinghouse Electric Locomotive Built for the New Haven.

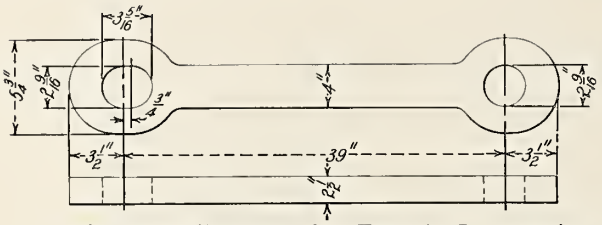

Fig. 2179—Drawbar for Electric Locomotive.

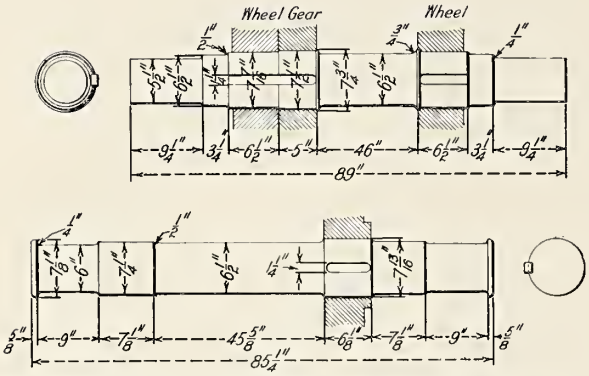

Fig. 2180—Axles for Baldwin-Westinghouse Electric Locomotive Built for the New Haven.

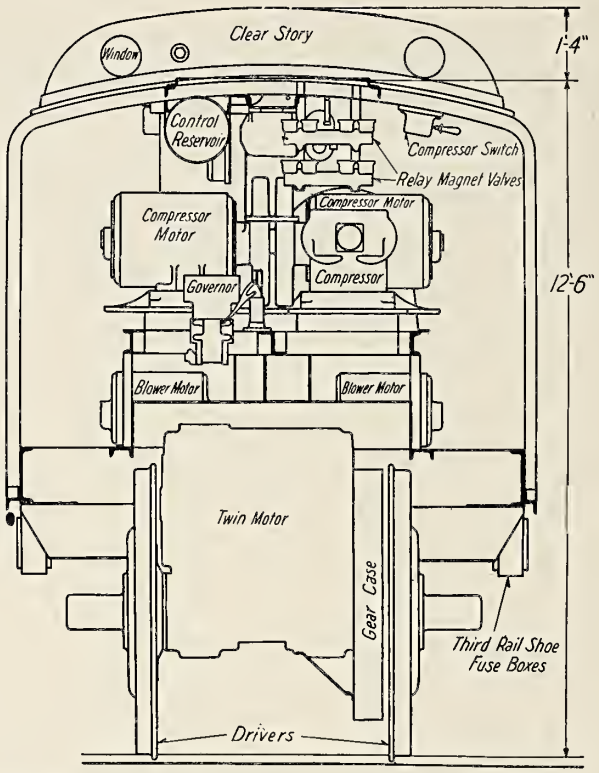

Fig. 2181—Cross Section of Baldwin-Westinghouse Electric Locomotive Built for the New Haven.

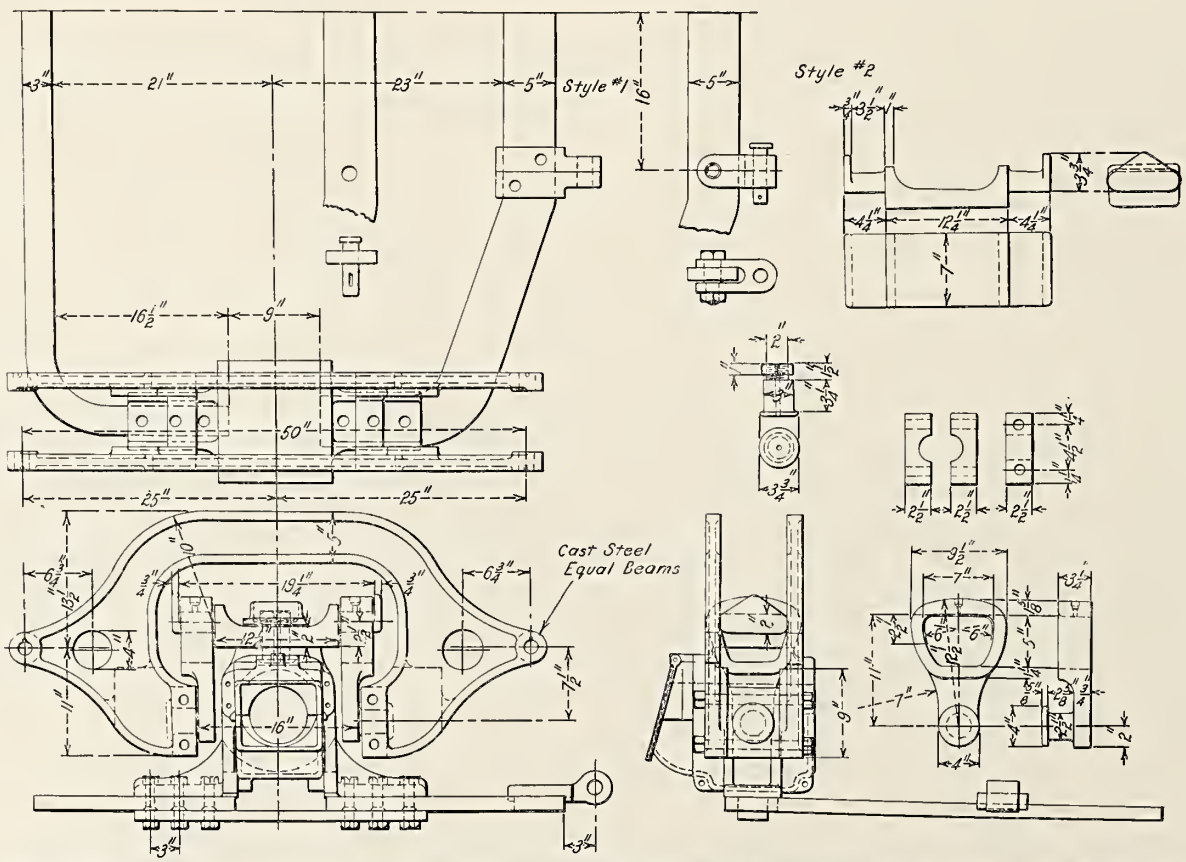

Fig. 2182—Rushton Truck for Baldwin-Westinghouse Electric Locomotive Built for the New Haven.

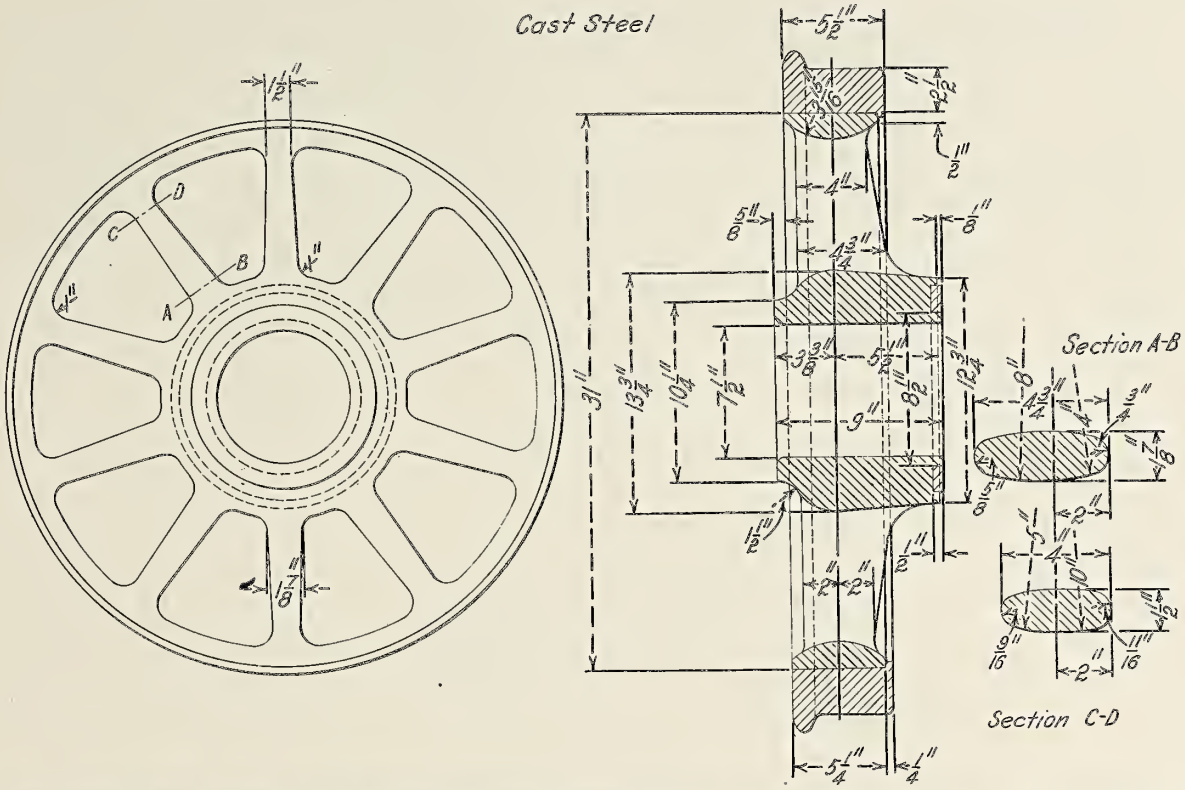

Fig. 2183—Truck Wheel for Baldwin-Westinghouse Electric Locomotive Built for the New Haven.

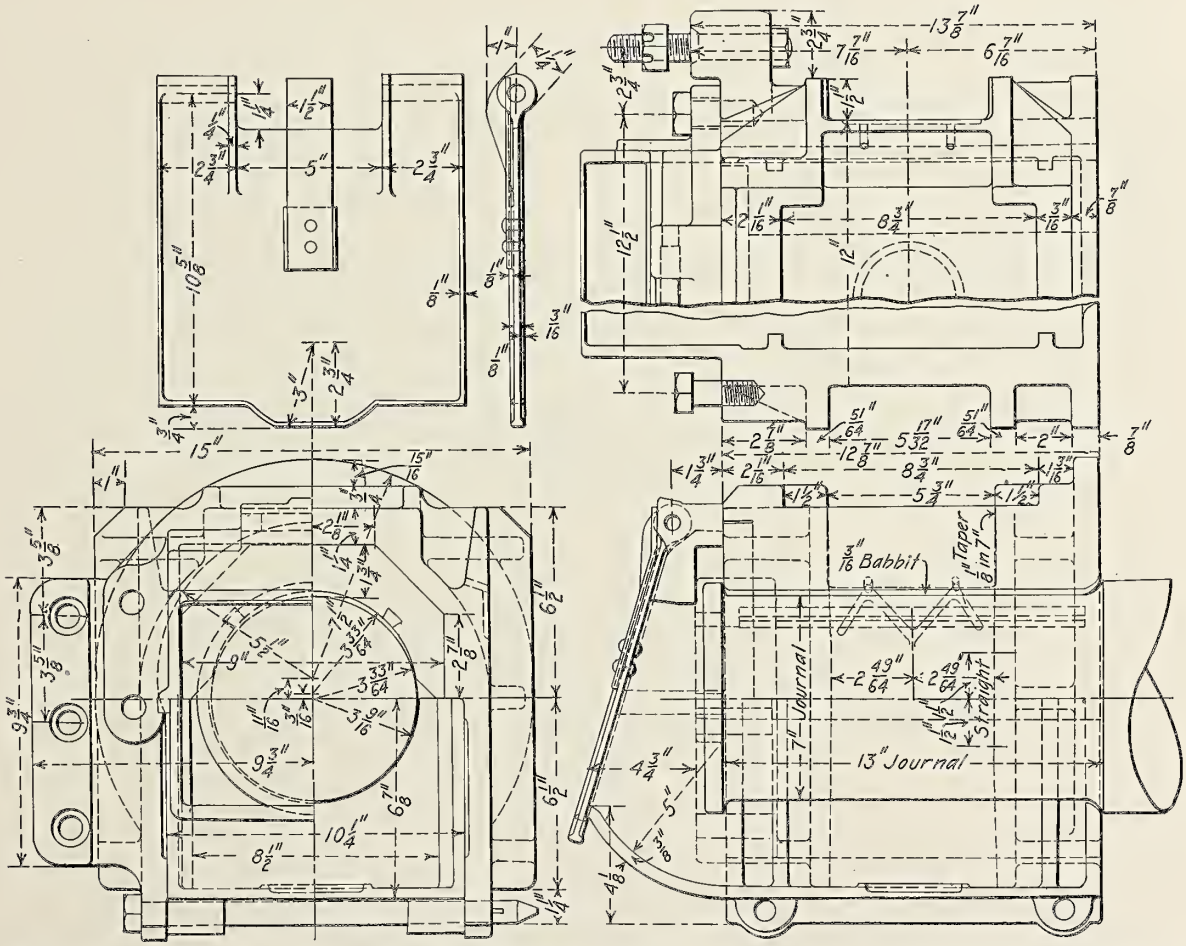

Fig. 2184—Driving Box for Baldwin-Westinghouse Electric Locomotive Built for the New Haven.

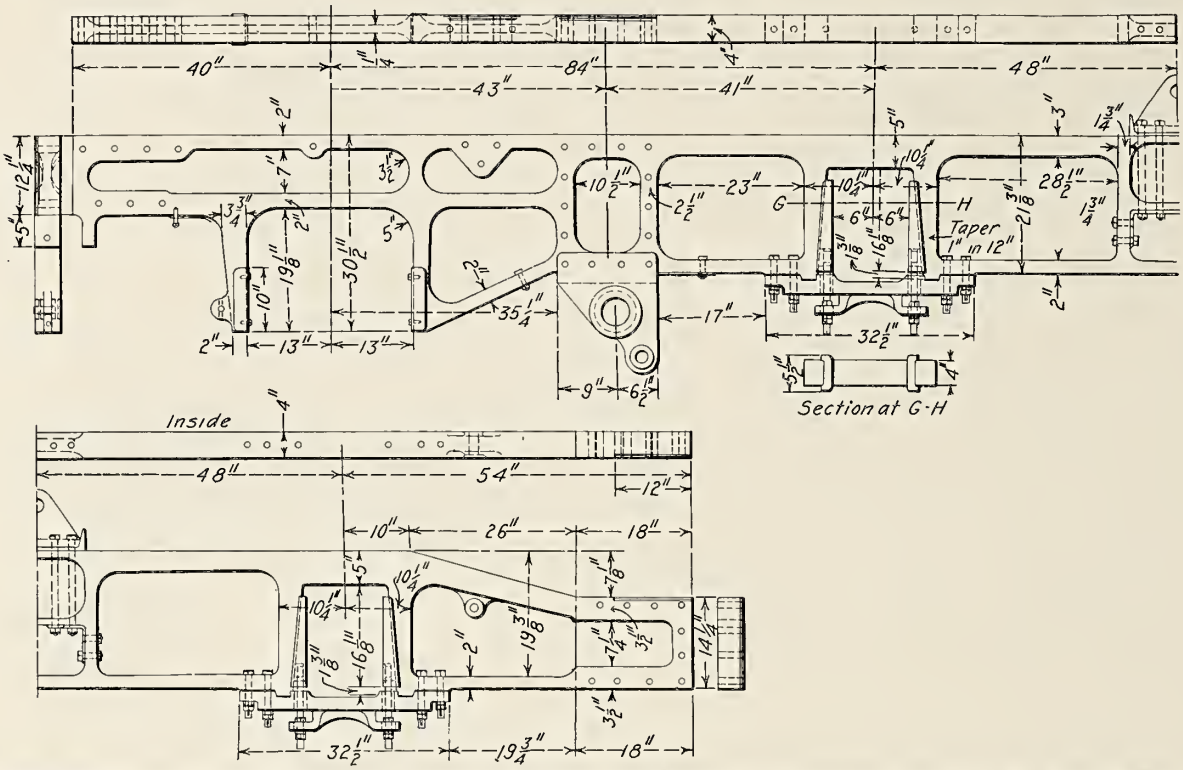

Fig. 2185—Cast Steel Frame for Baldwin-Westinghouse Electric Locomotive Built for the New Haven.

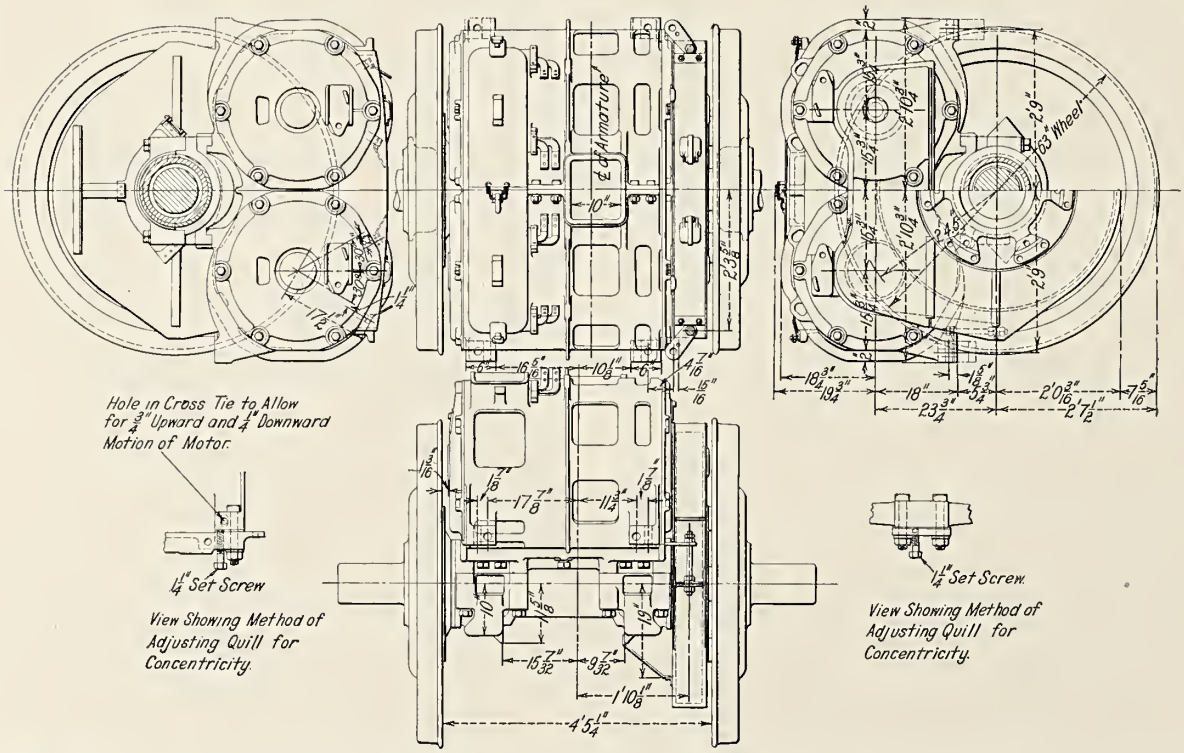

Fig. 2186—Alternating Current Railway Motor No. 409-C for Baldwin-Westinghouse Electric Locomotive Built for the New Haven. Weights: Rotating Parts and Pinions of Two Motors, 4,900 lbs.; Stationary Parts of Two Motors, 6,700 lbs.; Motor Base, Axle Bearings and Caps, 1,400 lbs.; Gear Case, 250 lbs.; Quill, Gear and Drive Details, 3,450 lbs., Total, 16,700 lbs.

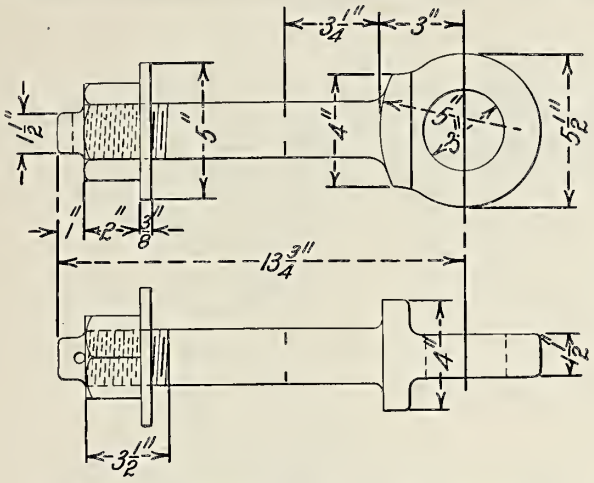

Fig. 2187—Drawbar for Electric Locomotive.

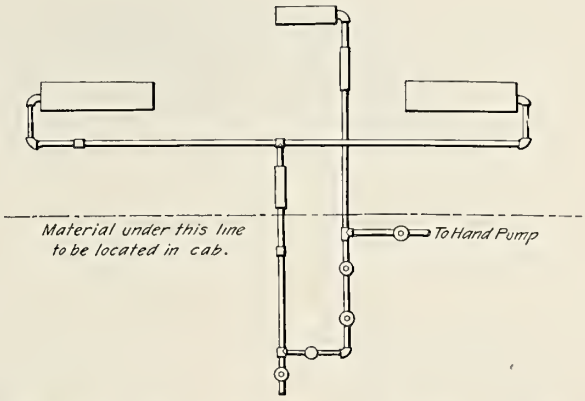

Fig. 2188—Piping Arrangement for Pneumatic Pantagraph Trolley Shown in Fig. 2191.

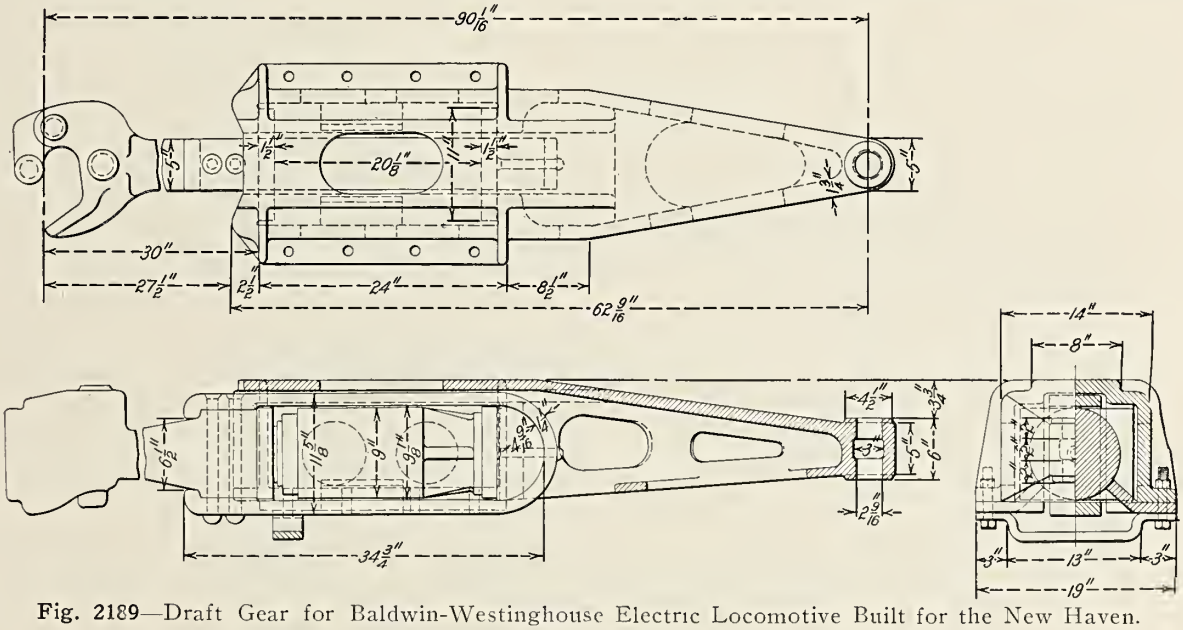

Fig. 2189—Draft Gear for Baldwin-Westinghouse Electric Locomotive Built for the New Haven.

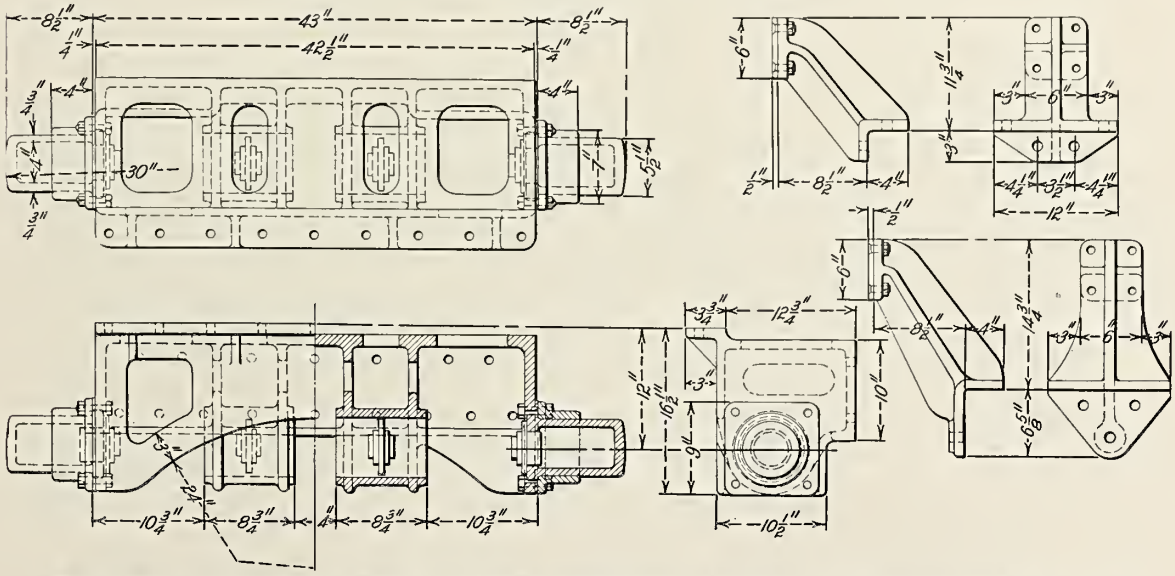

Fig. 2190—Cab Centering Device for Baldwin-Westinghouse Electric Locomotive Built for the New Haven.

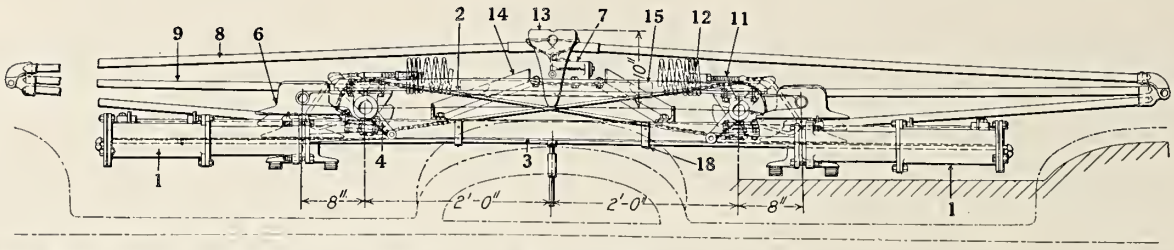

Fig. 2191—Pneumatic Pantagraph Trolley for Baldwin-Westinghouse Electric Locomotive Built for the New Haven.

Names of Parts of Pantagraph, Fig. 2191.

1 *Main Air Cylinder*
2 *Disc and Chain*
3 *Shaft and Angles*
4 *Lever Rod and Bearing*
6 *Insulator*
7 *Automatic Latch*
8 *Upper Frame*
9 *Lower Frame*
11 *Cam*
12 *Main Spring*
13 *Shoe*
14 *Latch Support*
15 *Spring Guide*
18 *Clamp*

D.C. Sequence

Steps	D.C.Bk.	M1	M2	S1	S2	J.R.	R1	R2	R3	R4	R5	RR1	RR2	RR3	RR4	RR5	G
Off																	
1st Series 1	○	○				○											
2	○	○		○		○											
3	○	○		○	○	○											
4	○	○		○	○	○	○										
5	○	○		○	○	○	○					○					
6	○	○			○	○	○	○				○					
7	○	○			○	○	○	○				○	○				
8	○	○			○	○		○	○			○	○				
9	○	○			○	○		○	○				○	○			
10	○	○			○	○			○	○			○	○			
11	○	○			○	○			○	○				○	○		
12	○	○			○		○			○	○			○	○		
Series 13	○	○			○	○				○	○				○		
Trans. 14	○	○	○		○	○											○
1st Parallel 15	○	○	○		○												○
16	○	○	○		○			○				○					○
17	○	○	○		○			○	○			○	○				○
18	○	○	○		○			○	○	○		○	○	○			○
19	○	○	○		○			○	○	○	○	○	○	○	○		○
Parallel 20	○	○	○		○						○	○				○	○	○

A.C. Sequence

Steps	A.C.Bk.	M1	P	S2	I	II	III	IV	V	VI	VII	VIII	IX	X	XI	XII
Off	○															
1	○	○	○	○	○											
2	○	○	○	○	○	○										
3	○	○	○	○	○	○	○									
4	○	○	○	○	○	○	○	○								
5	○	○	○	○		○	○	○	○							
6	○	○	○	○			○	○	○	○						
7	○	○	○	○				○	○	○	○					
8	○	○	○	○					○	○	○	○				
9	○	○	○	○						○	○	○	○			
10	○	○	○	○							○	○	○	○		
11	○	○	○	○								○	○	○	○	
12	○	○	○	○									○	○	○	○
13	○	○	○	○									○	○	○	○
14	○	○	○	○									○	○	○	○
15	○	○	○	○									○	○	○	○
16	○	○	○	○									○	○	○	○
17	○	○	○	○									○	○	○	○
18	○	○	○	○									○	○	○	○
19	○	○	○	○									○	○	○	○
20	○	○	○	○									○	○	○	○

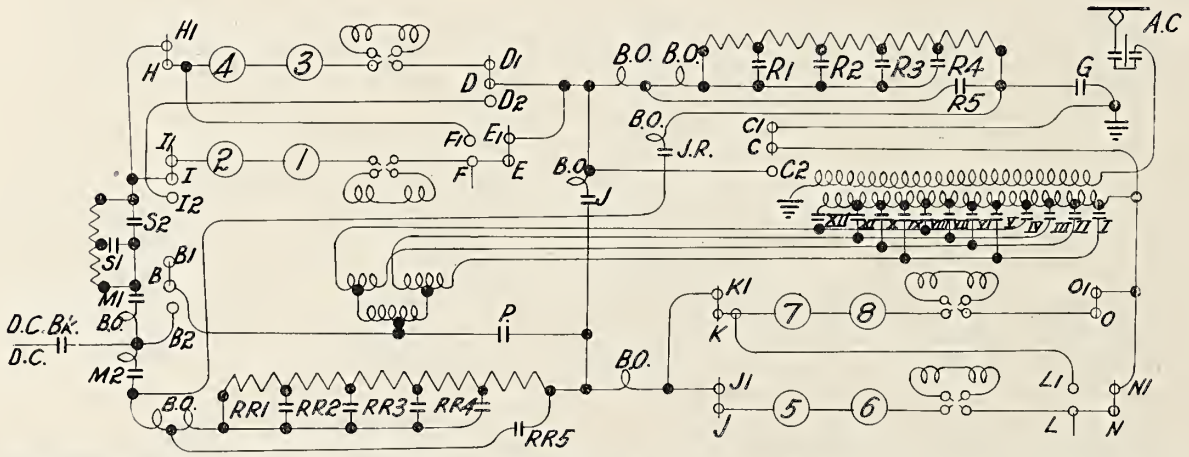

Fig. 2192—Wiring Diagram of Baldwin-Westinghouse A. C.—D. C. Electric Locomotive Built for the New Haven.

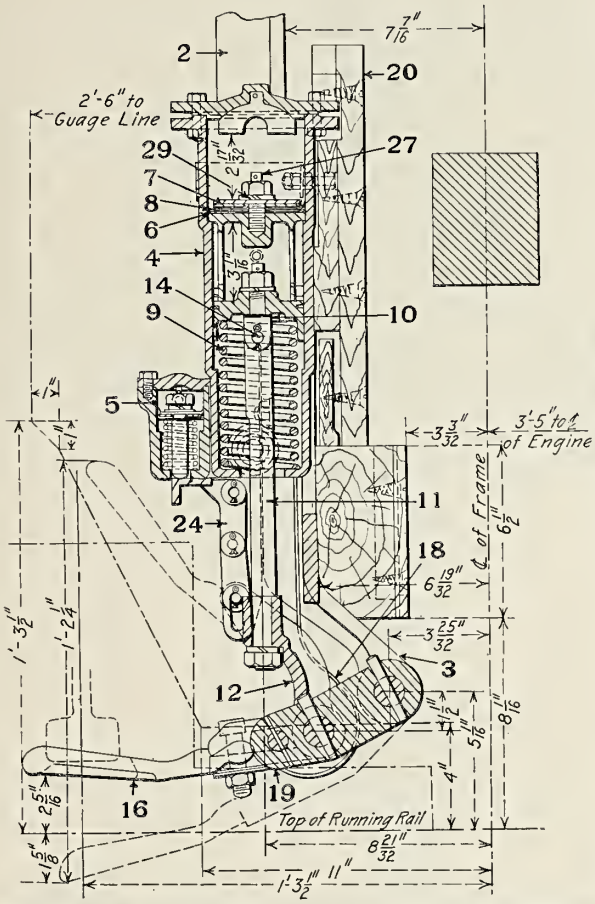

Fig. 2193—Pneumatically Operated Third Rail Shoe for Baldwin-Westinghouse Electric Locomotive Built for the New Haven.

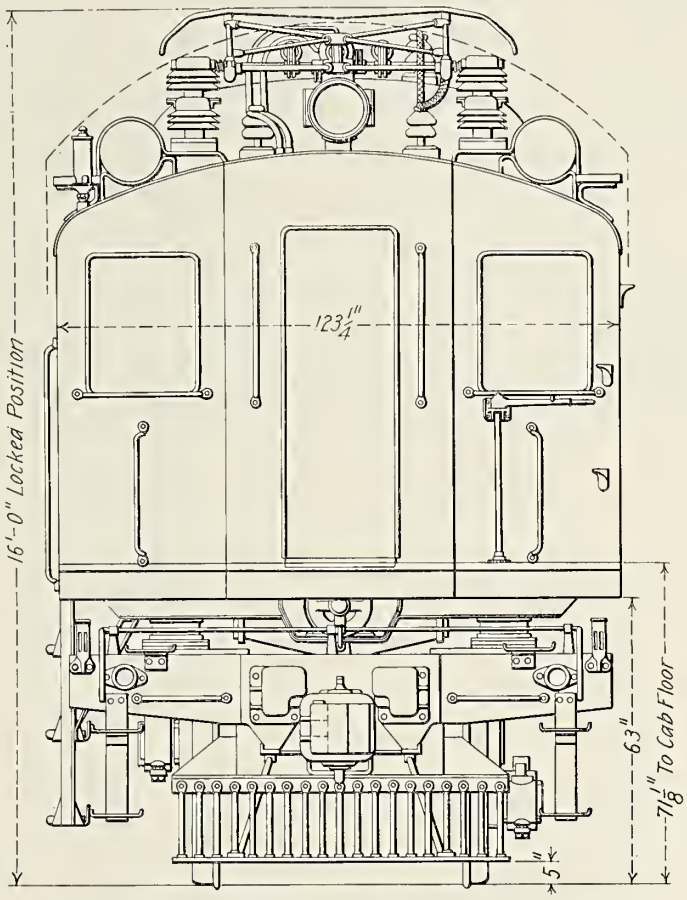

Fig. 2194—End Elevation of Norfolk & Western Electric Locomotive Shown in Fig. 2196.

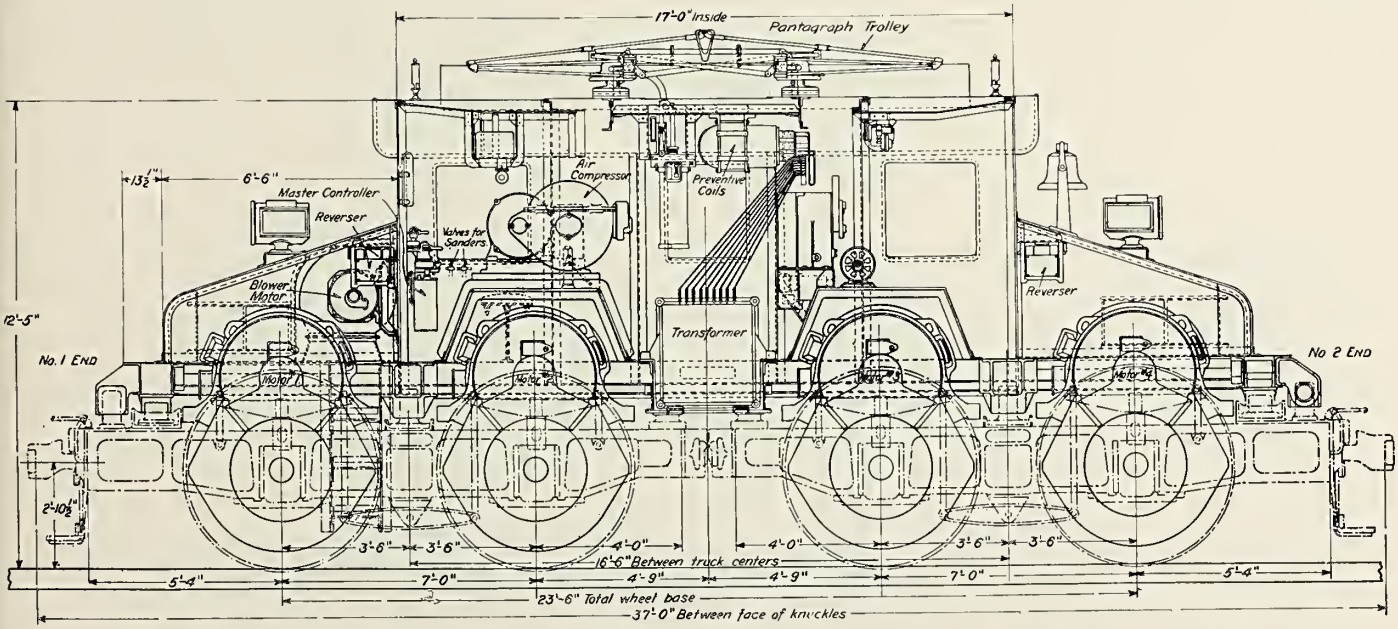

Fig. 2195—Baldwin-Westinghouse 11,000 Volt Alternating Current Switching Locomotive Built for the New York, New Haven & Hartford. Four Motors, Type, 410; Voltage, 190; H. P., 110; Cycles, 25; Single Phase. Unit Switch Control. Diameter of Drivers, 63 in. Gear Ratio, 17 to 101. Tractive Effort, 39,500 lbs. Drawbar Pull at 7 M. P. H., 34,415 lbs. Weight, 80 Tons.

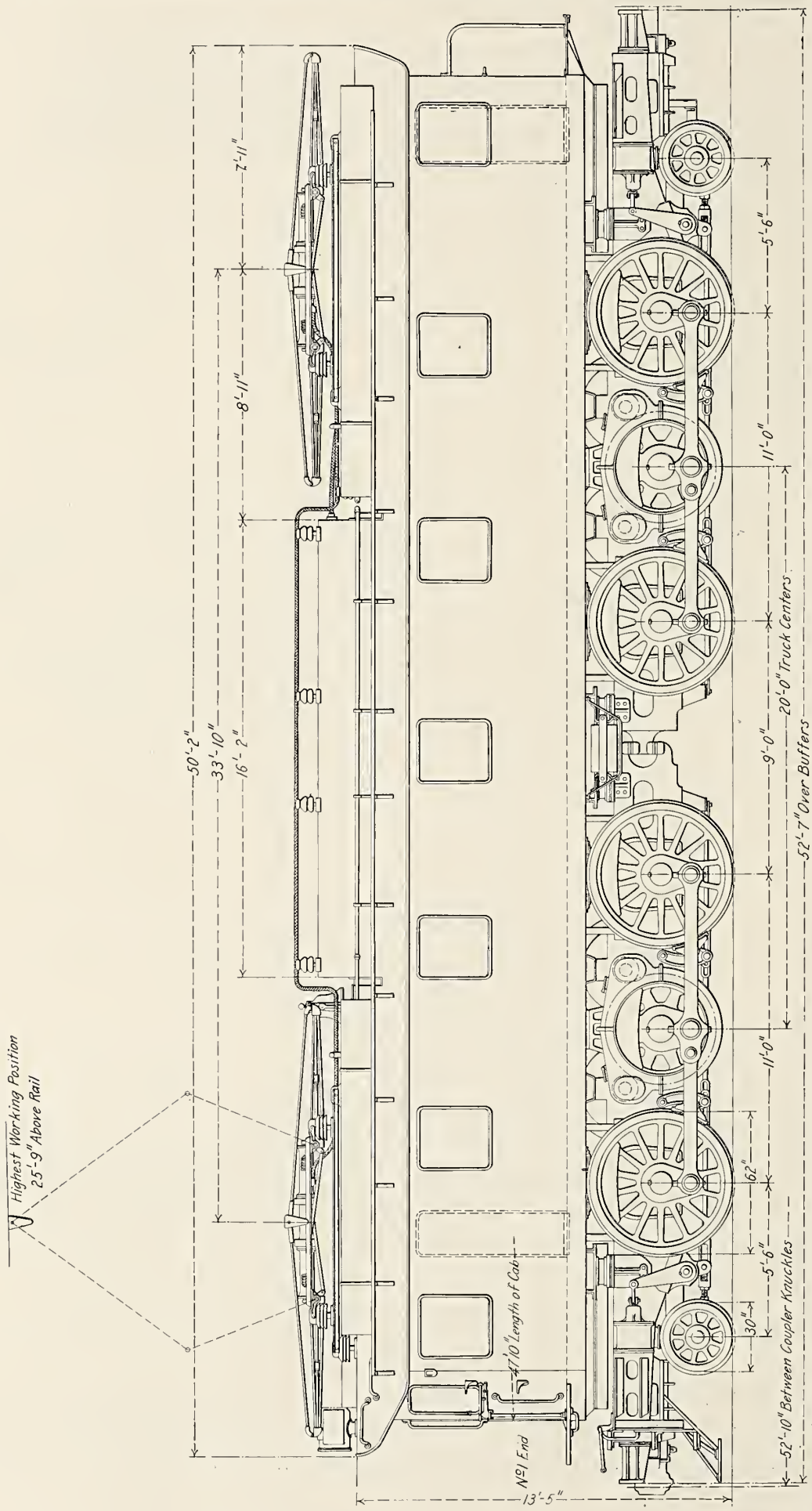

Fig. 2196—General Elevation of Baldwin-Westinghouse Single Phase Induction Type Electric Locomotive with Articulated Trucks. Built for the Norfolk & Western.

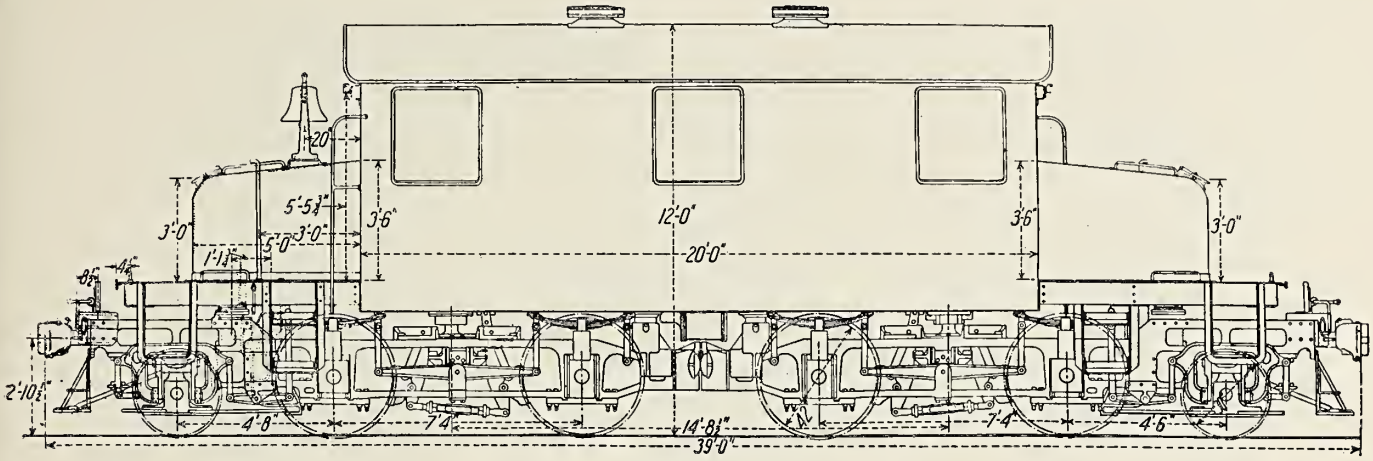

Fig. 2197—Baldwin-Westinghouse High Speed Electric Locomotive for Passenger Service. Built for the Oakland, Antioch & Eastern. Voltage 600-1,200. Four 250 H. P. Motors. Weight, 124,000 lb.

(*See Fig. 2111 for general view.*)

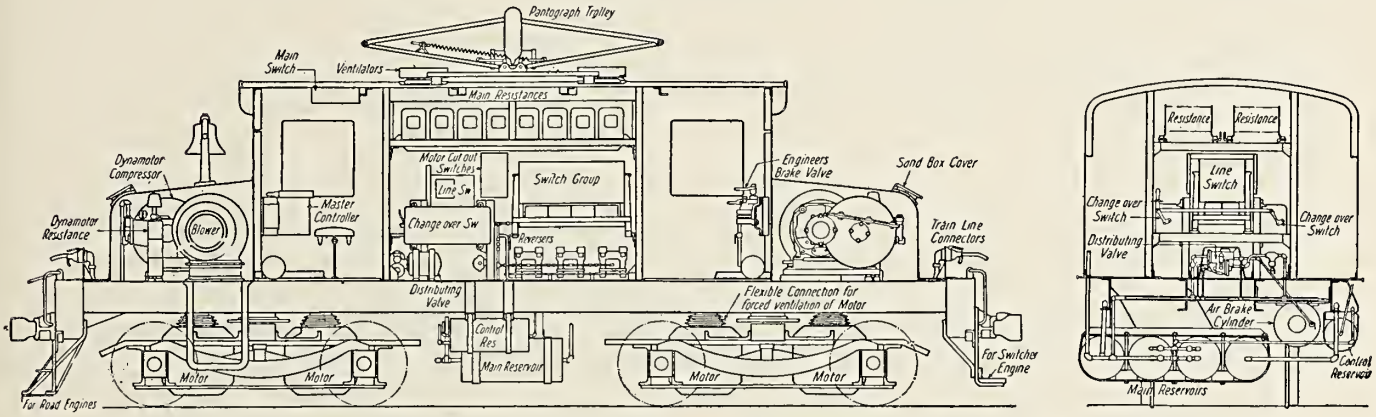

Fig. 2198—Baldwin-Westinghouse Direct Current Electric Locomotive Built for the Southern Pacific. Voltage 600-1,200. Four Motors. Weight, 100,000 lb.

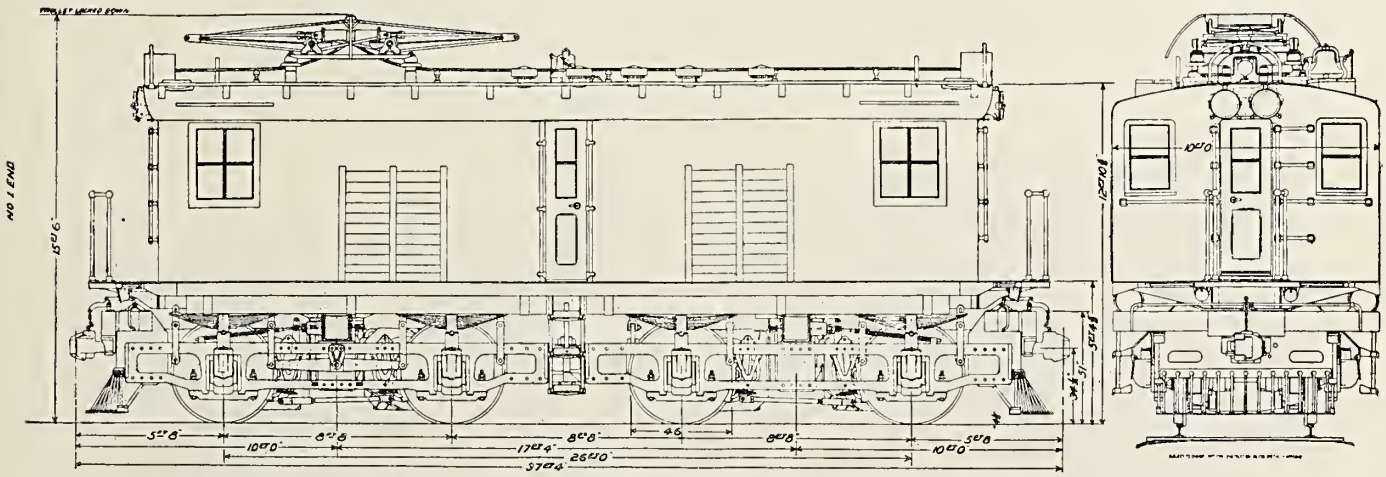

Fig. 2199—Direct Current Electric Locomotive Built by the General Electric and American Locomotive Companies for the Butte, Anaconda & Pacific. Voltage 2,400. Weight, 160,000 lb.

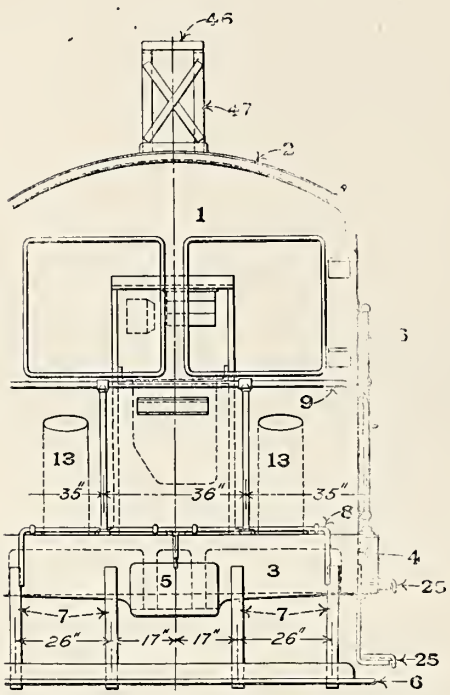

Fig. 2200—End Elevation of Baldwin-Westinghouse Electric Locomotive Built for the Hoboken Shore Road.

Names of Parts of Figs. 2200-2202.

1 *Cab*
2 *Cab Roof*
3 *Bumper*
4 *Side Frame*
5 *Coupler*
6 *Bumper Step*
7 *Bumper Step Hanger*
8 *Uncoupling Rod*
9 *Bumper Hand Rail*
11 *Brake Cylinder*
12 *Cylinder Lever*
13 *Sand Box*
14 *Sand Box Cover*
15 *Sand Pipe*
16 *Hand Rail*
17 *Bell*
18 *Air Whistle*
19 *Center Plate*
20 *Truck Frame*
21 *Equalizer*
22 *Truck Pedestal*
23 *Pedestal Tie Bar*
24 *Wheel*
25 *Truck Spring*
26 *Truck Spring Band*
27 *Pedestal Cap or Spreader*
28 *Pedestal Cap Bolt*
29 *Truck Bolster*
30 *Motor*
31 *Brake Hanger*
32 *Brake Head and Shoe*
33 *Brake Hanger Carrier*
34 *Dead Lever*
35 *Brake Lever*
36 *Brake Rod*
37 *Dead Lever Guide*
38 *Lower Brake Rod*
39 *Brake Rod Adjusting Sleeve*
40 *Safety Chain Eye Bolt*
41 *Rheostat*
42 *Motor-Driven Air Compressor*
44 *Controller*
45 *Air Brake Valve*
46 *Trolley Base*
47 *Trolley Stand*

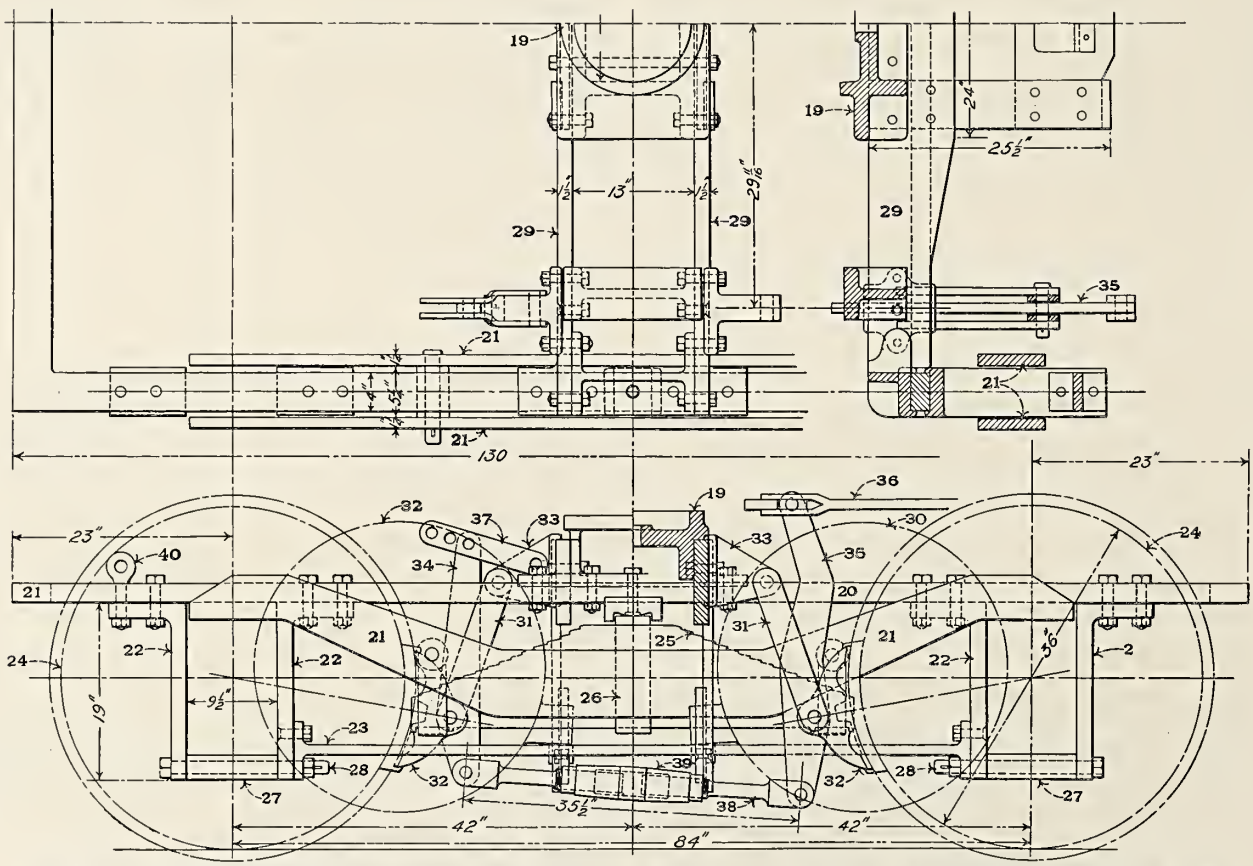

Fig. 2201—Four-Wheel Motor Truck for Baldwin-Westinghouse Electric Locomotive Built for the Hoboken Shore Road.

Fig. 2202—Plan and Side Elevation of Baldwin-Westinghouse Electric Locomotive Built for the Hoboken Shore Road.

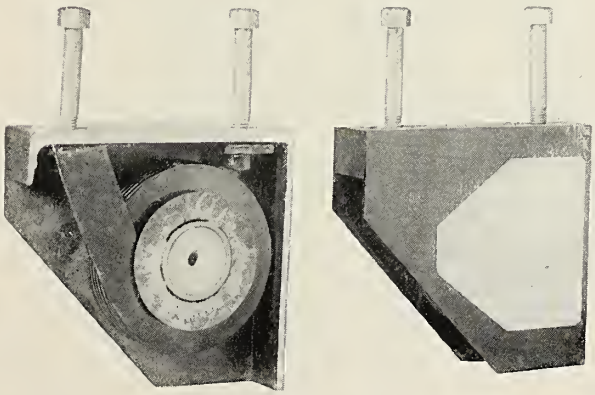

Fig. 2203—Blow-Out Coils.

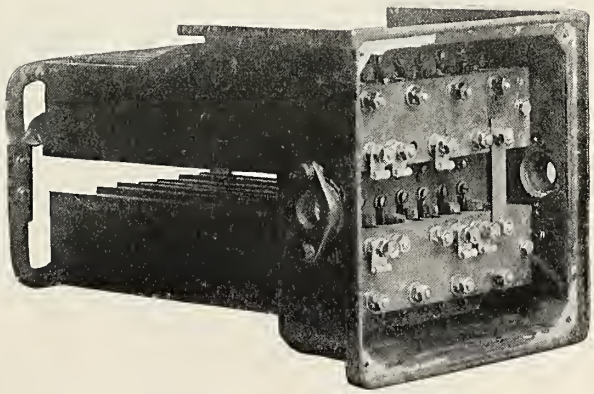

Fig. 2204—Control Resistor.

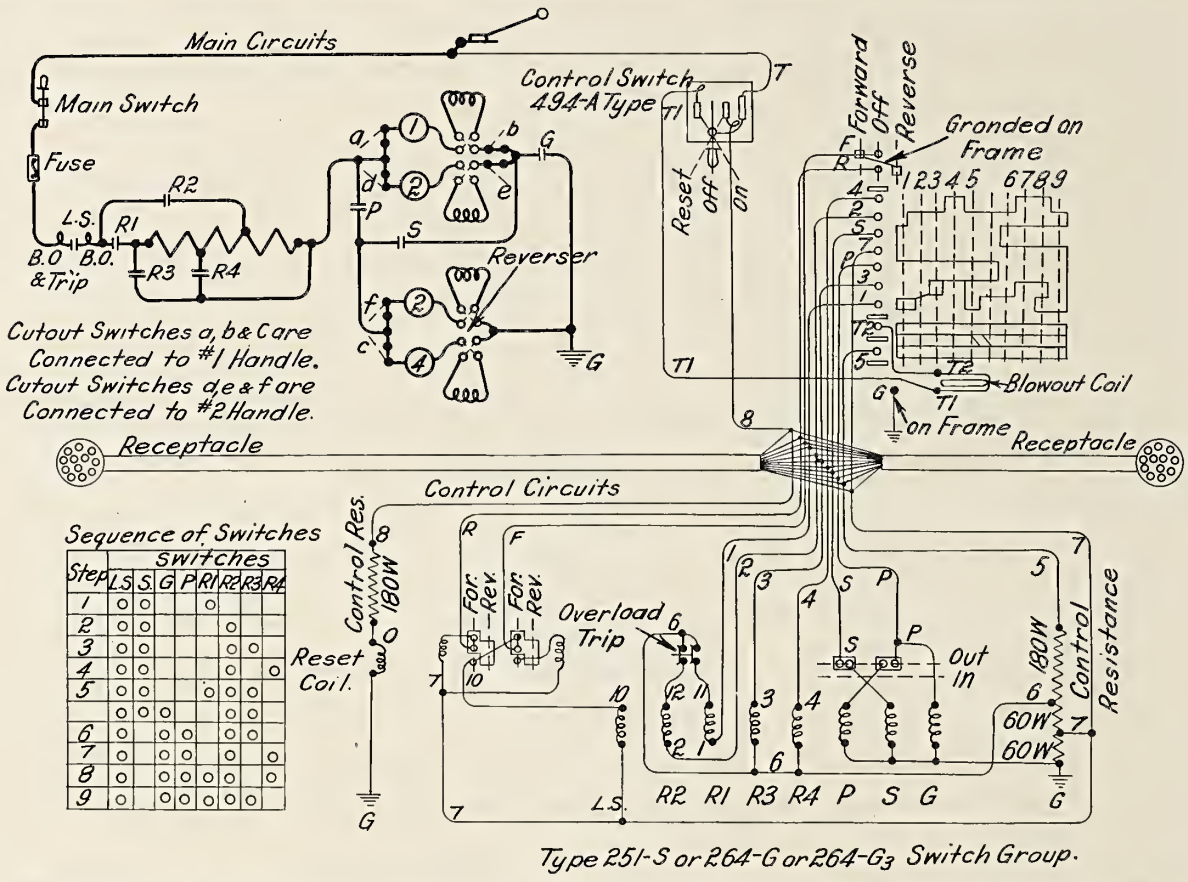

Fig. 2205—Unit Switch Schematic Diagram for Hand Operation. Four Motors of 75 H. P. or Less.

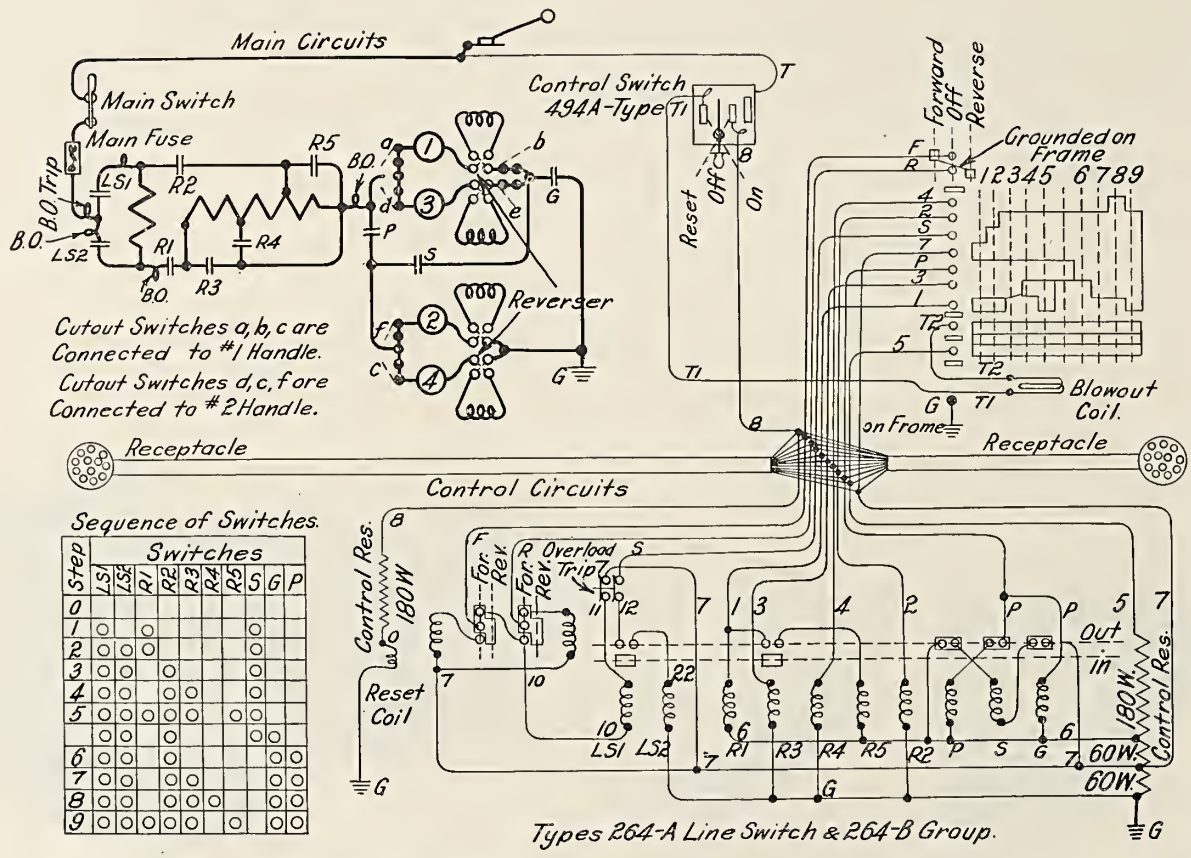

Fig. 2206—Unit Switch Schematic Diagram for Hand Operation. Four Motors.

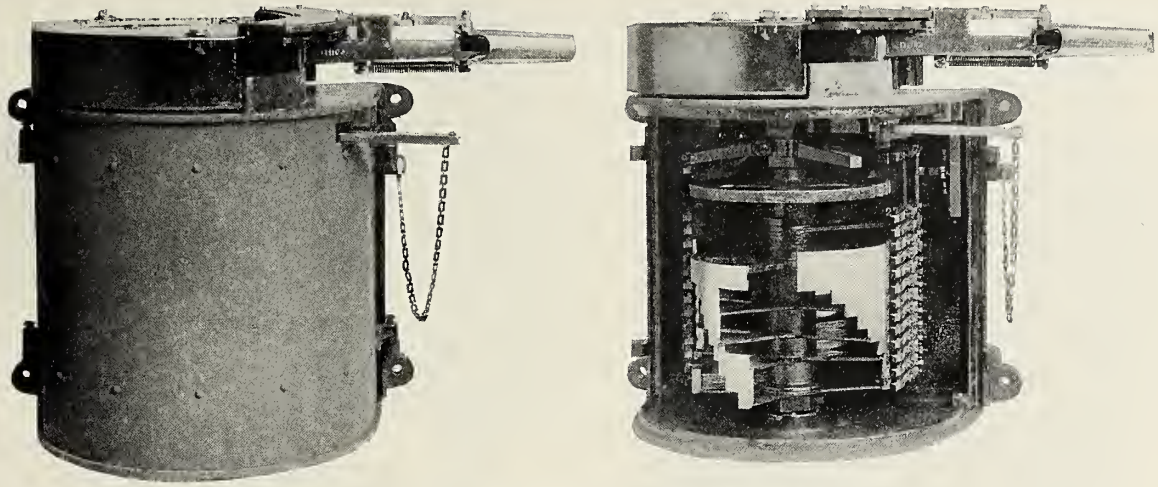

Fig. 2207—Master Controller for Large Electric Locomotives.

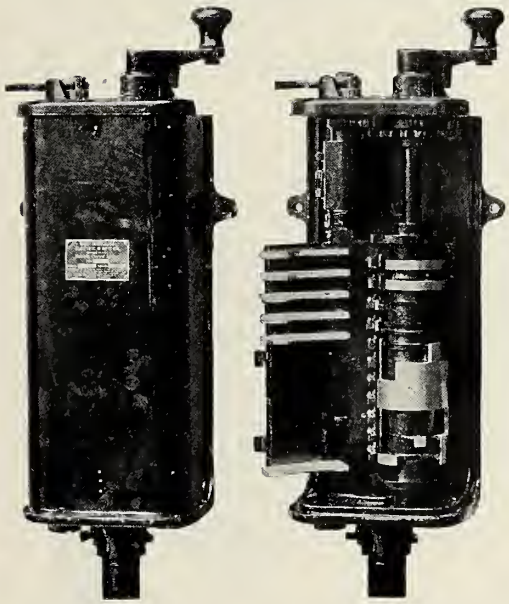

Fig. 2208—Westinghouse Type 15-B Master Controller for H. L. Unit Switch Control.

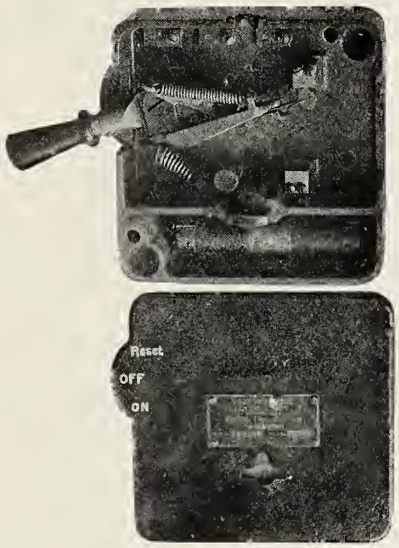

Fig. 2209—Control Switch.

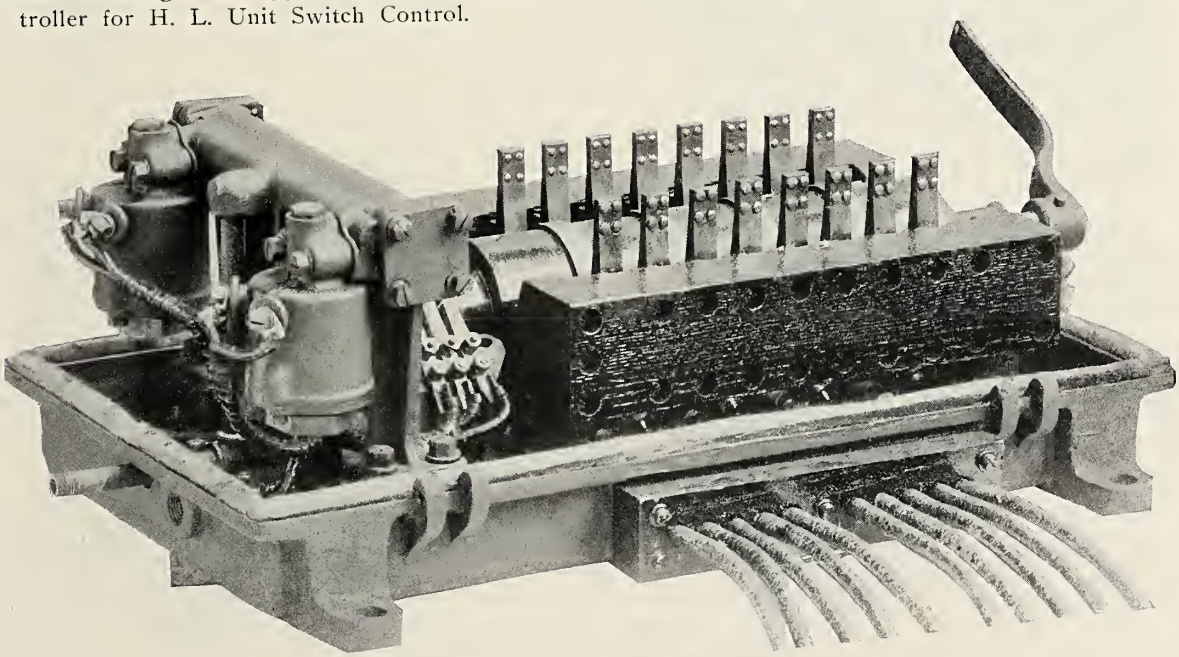

Fig. 2210—Reverser for Electric Locomotives.

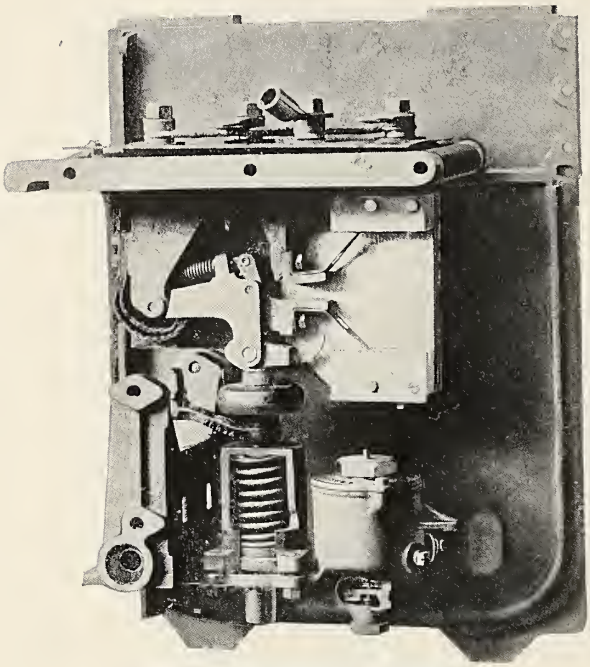

Fig. 2211—Switch Details.

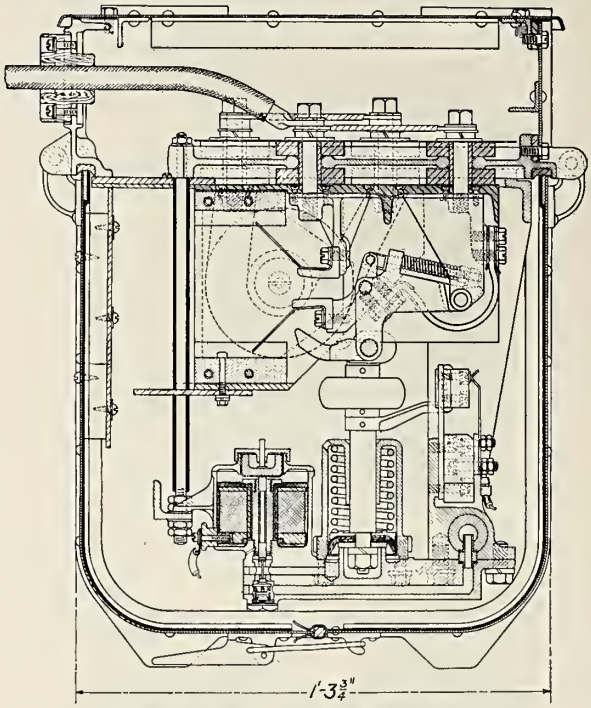

Fig. 2212—Switch Details.

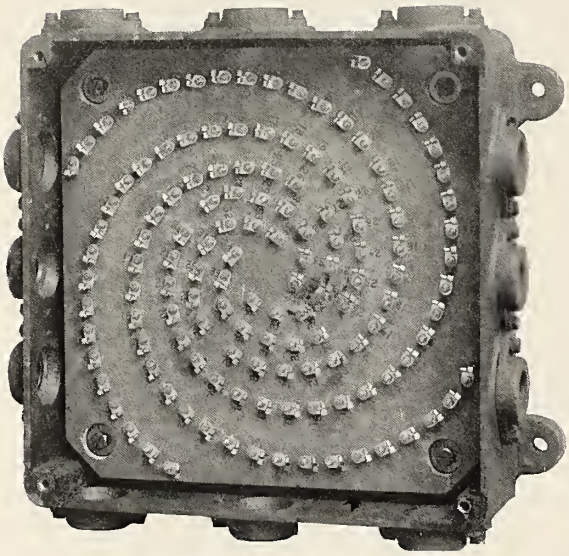

Fig. 2213—Junction Box.

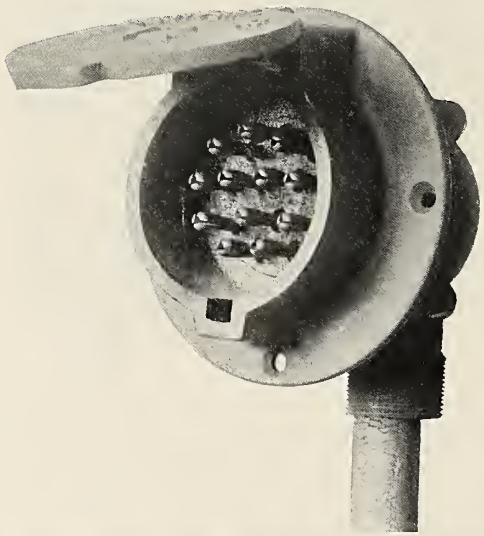

Fig. 2214—Train Line Receptacle and Jumper.

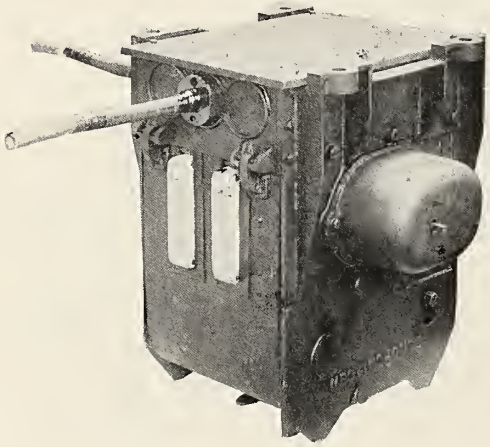

Fig. 2215—Line Switch, Closed.

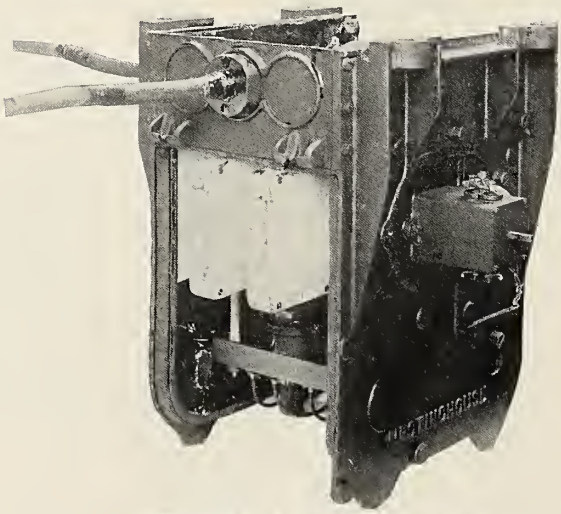

Fig. 2216—Line Switch, Open.

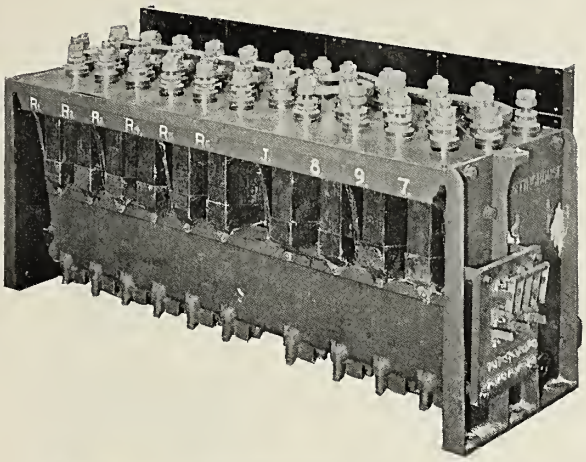

Fig. 2217—Switch Group for Large Electric Locomotives.

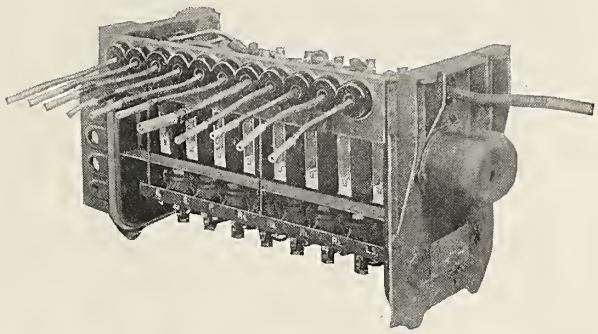

Fig. 2218—Switch Group for Small Electric Locomotives.

Fig. 2219—Train Line Jumper and Receptacle as Used on Baldwin-Westinghouse Electric Locomotives.

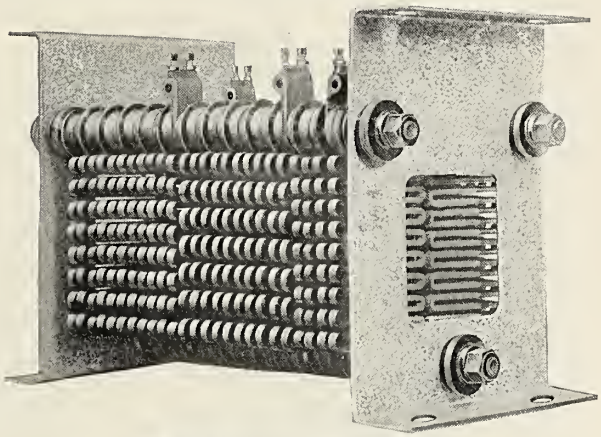

Fig. 2220—Grid Resistor.

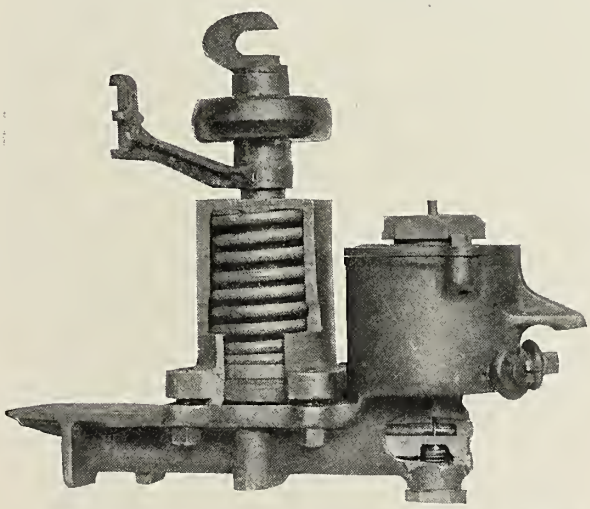

Fig. 2221—Cylinder and Magnet Valve of Unit Switch.

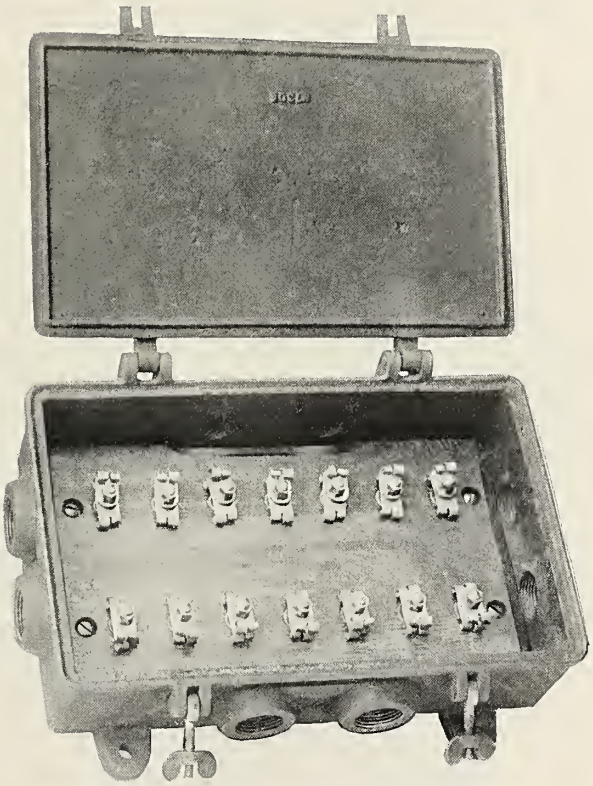

Fig. 2222—Train Line Junction Box.

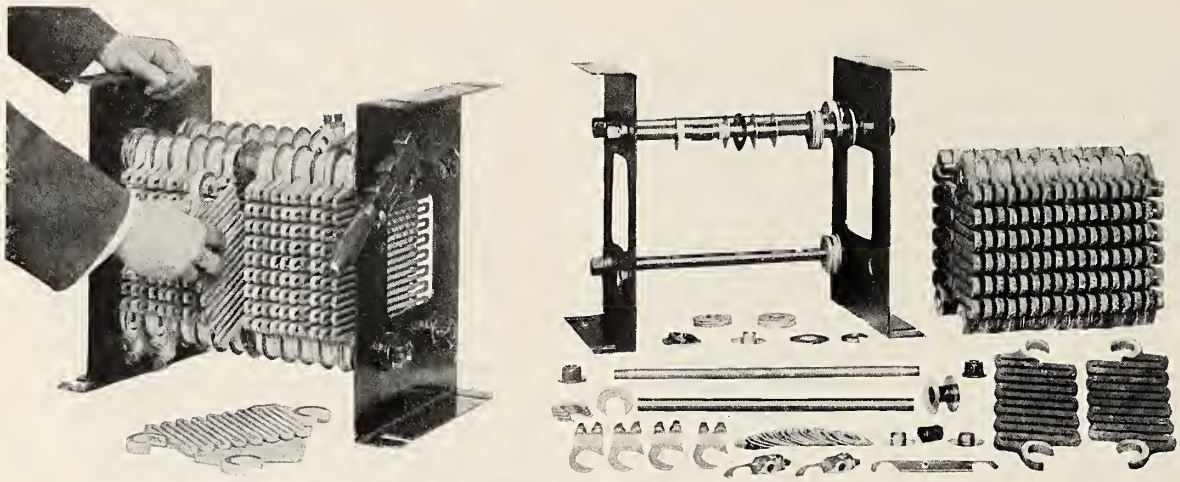

Fig. 2223—Rheostat for Electric Locomotive.

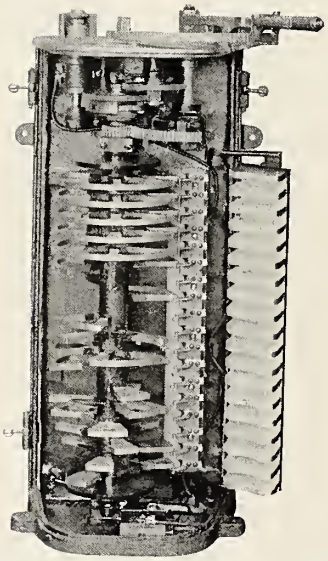

Fig. 2224—Controller for Electric Locomotive.

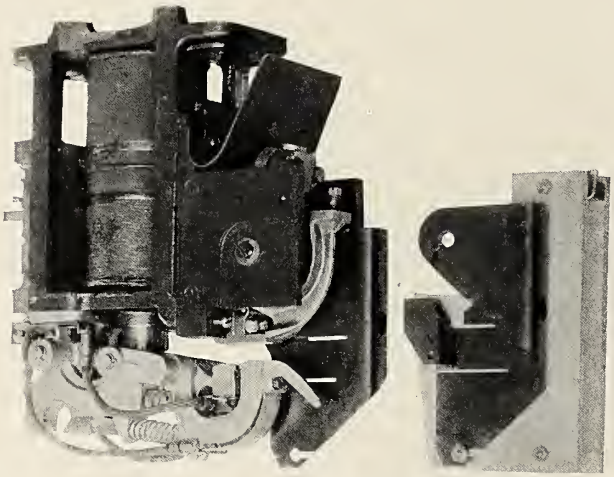

Fig. 2225—Low Voltage Contactor with Arc Chute Removed and Interlock.

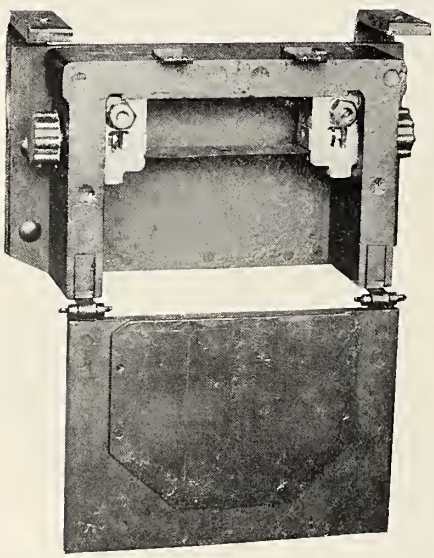

Fig. 2226—Fuse Box.

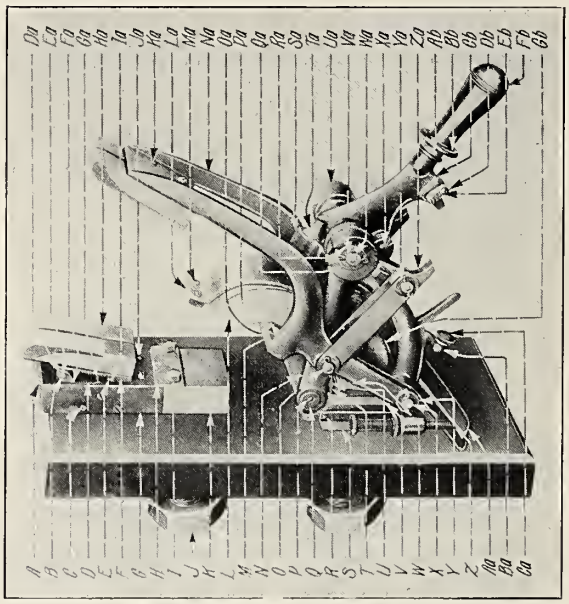

Fig. 2227—Circuit Breaker.

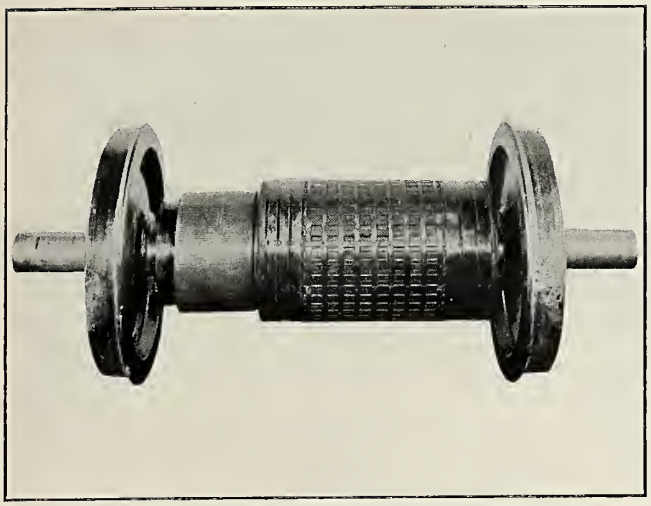

Fig. 2228—Wheels and Armature of Electric Locomotive Type 4444-E-250-8GE91-600V. Built for the New York Central by the General Electric and American Locomotive Companies.

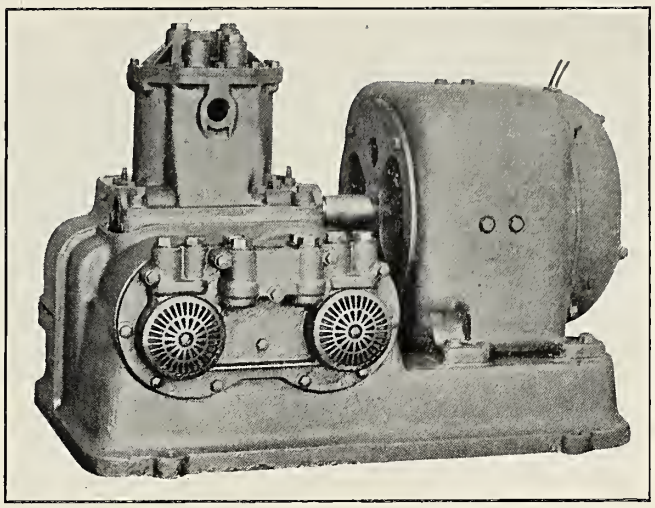

Fig. 2229—100 cu. ft. Air Compressor; General Electric Company.

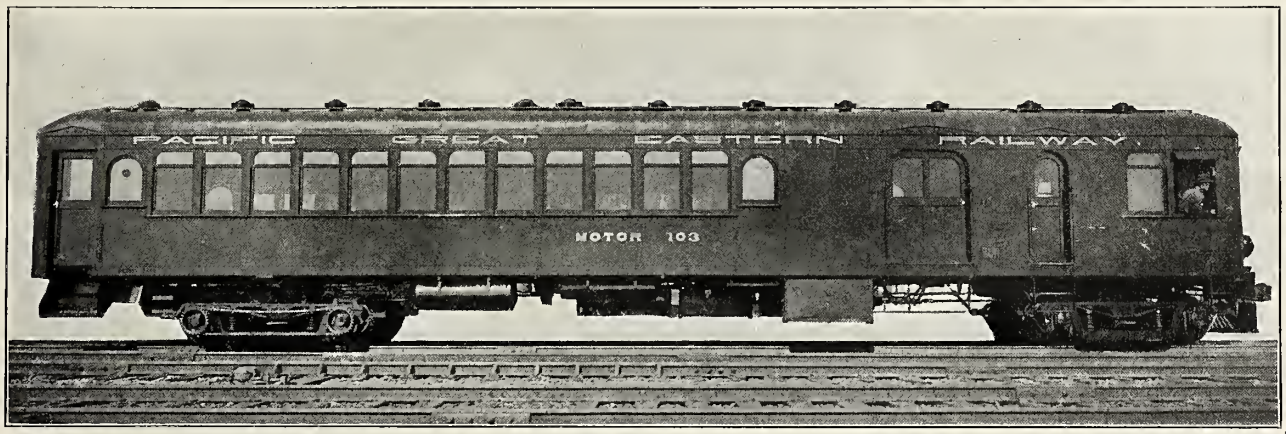

Fig. 2230—Steel Gasolene Motor Car. Weight, 72,000 lb. Builder, Hall-Scott Motor Car Company, Inc.

Fig. 2231—Gas-Electric Motor Car. Seating Capacity, 44. Engine Rating, 90 H. P. at 950 R. P. M. Builder, Drake Railway Automotrice Company.

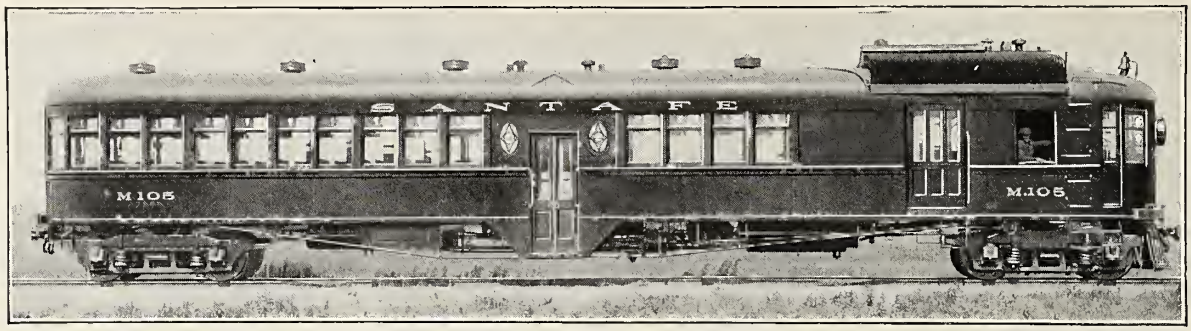

Fig. 2232—Gas-Electric Motor Car Type CE-68-B-10. Built for the Atchison, Topeka & Santa Fe by the General Electric Company.

Fig. 2233—Steel Vestibuled Electric Motor Car Operated by Storage Batteries. Weight, 59,000 lb. Seating Capacity, 51. Length of Passenger Compartment, 32 ft. Length of Baggage Compartment, 12 ft. 10 in. Equipped with Four 25 H. P. Motors. Builder, Railway Storage Battery Car Company.

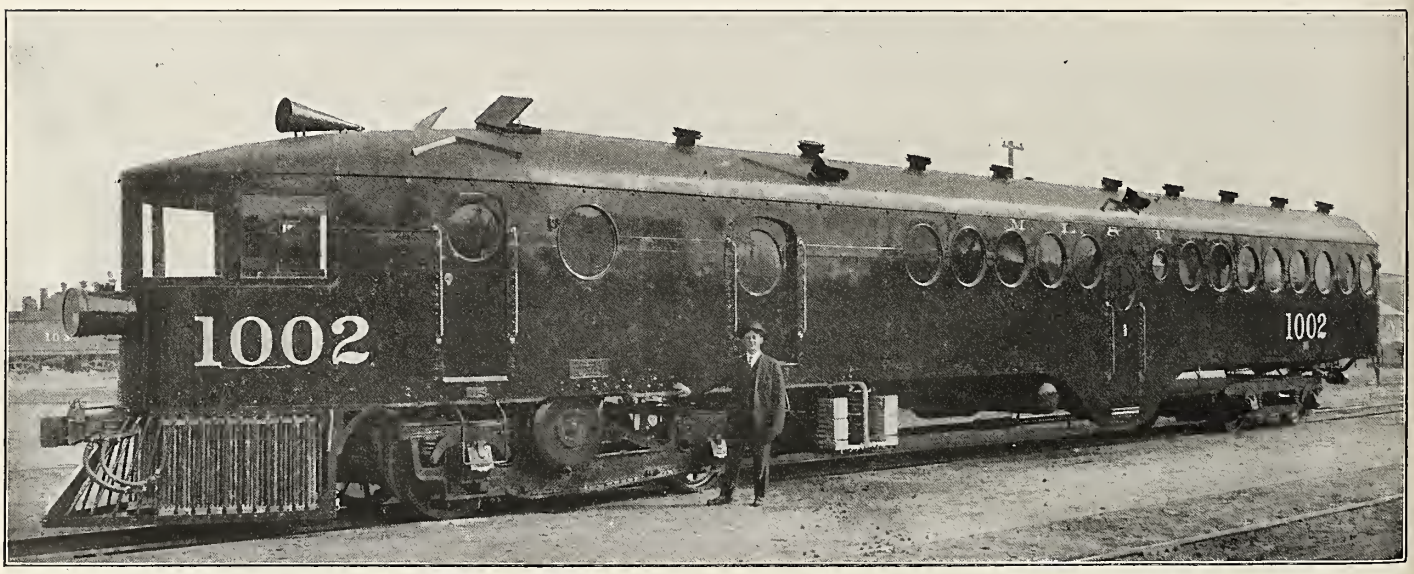

Fig. 2234—Steel Gasolene Motor Car. Weight, 78,000 lb. Length over End Sills, 70 ft. Seating Capacity, 28. Builder, McKeen Motor Car Company.

Fig. 2235—Steel Gas-Electric Motor Car. Weight, 97,000 lb. Length Over Bumpers, 70 ft. 2 in. Seating Capacity, 91. Horse Power, 200. Builder, General Electric Company.

Fig. 2236—Steel Gas-Electric Motor Car. Weight, 99,000 lb. Length Over Bumpers, 70 ft. 2 in. Seating Capacity, 86. Horse Power, 200. Builder, General Electric Company.

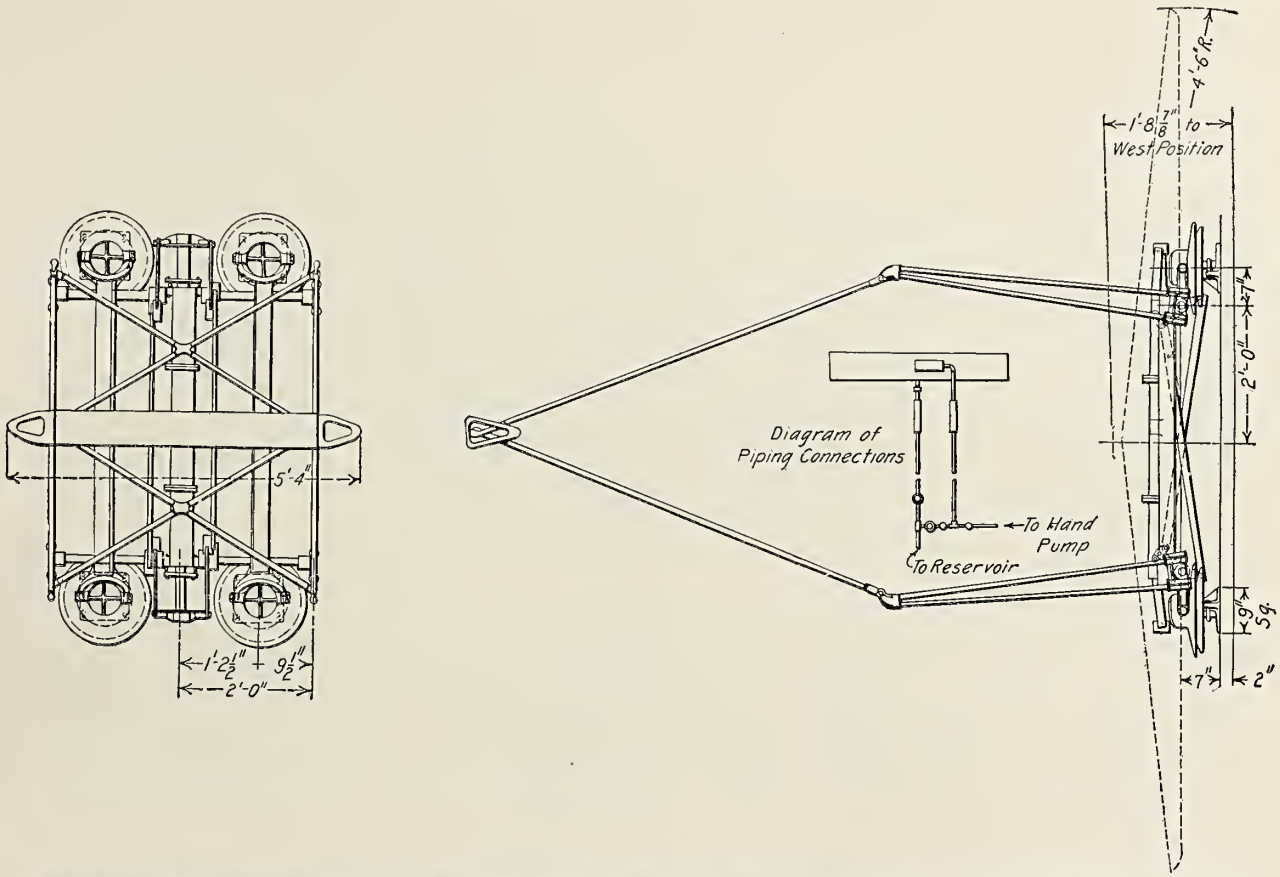

Fig. 2237—Pneumatically Operated Pantagraph Trolley for Electric Motor Cars. Built for the New York, New Haven & Hartford by the Westinghouse Electric & Manufacturing Company.

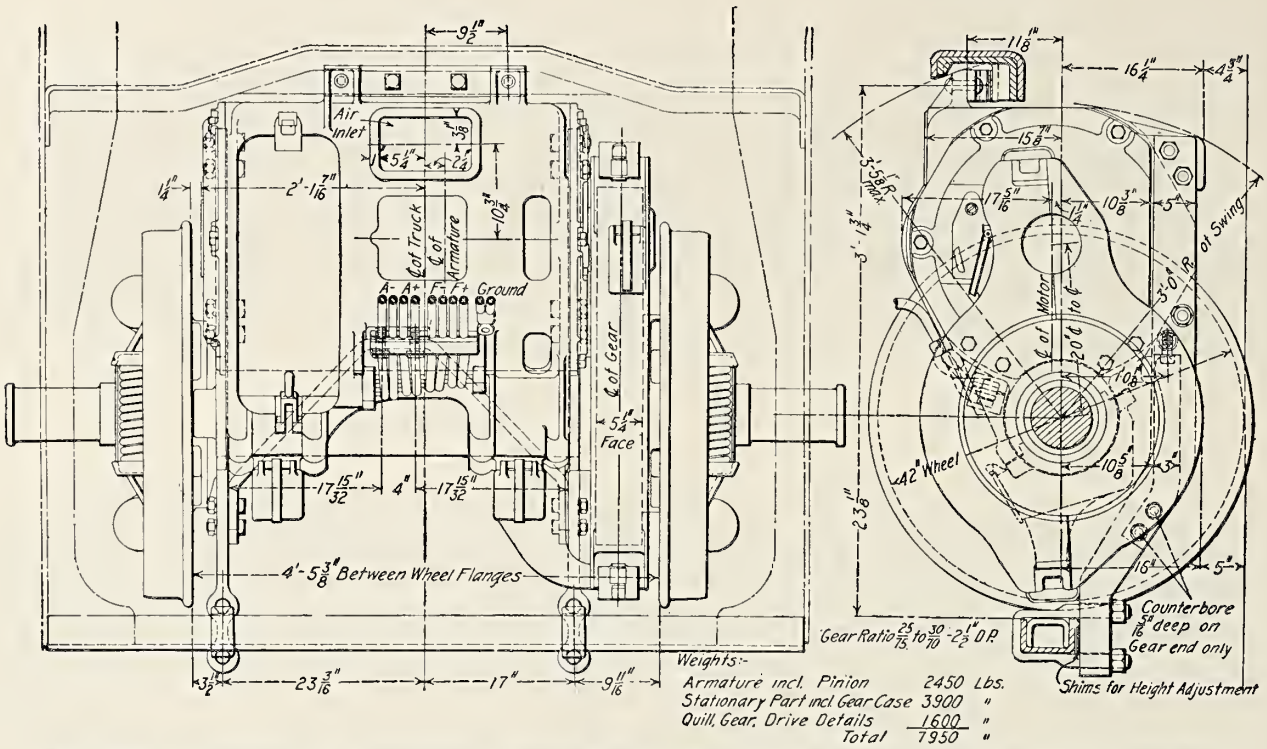

Fig. 2238—Application of Alternating Current Electric Motor No. 409 for Electric Motor Car. Built for the New York, New Haven & Hartford by the Westinghouse Electric & Manufacturing Company.

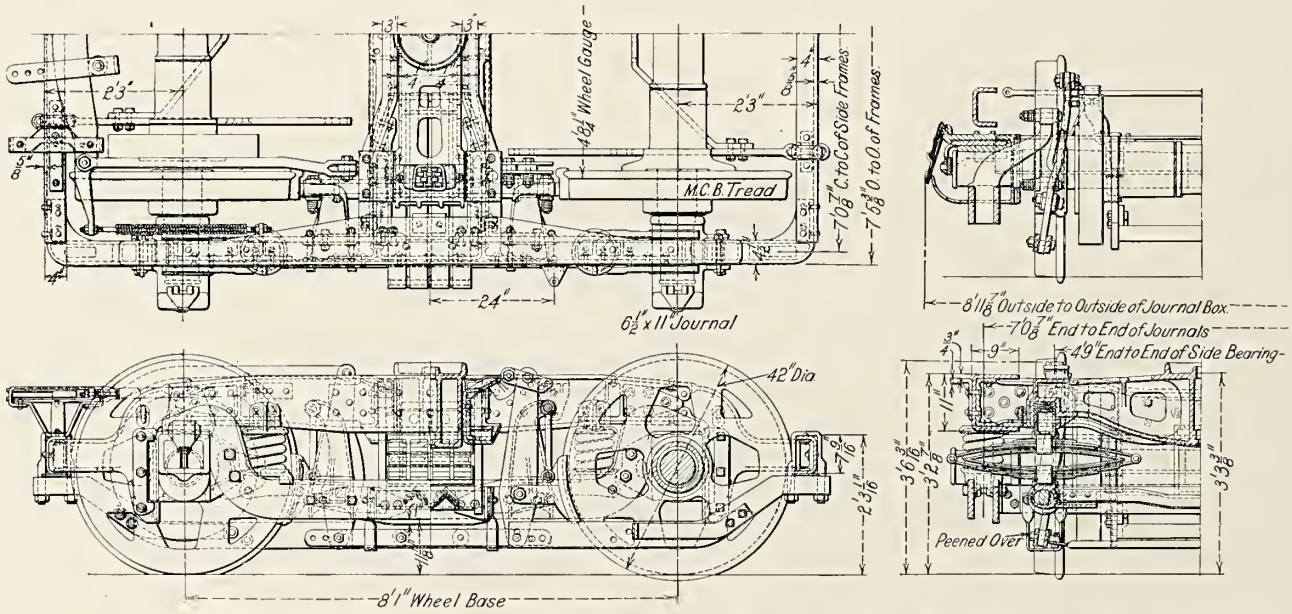

Fig. 2239—Electric Motor Car Truck. Built for the New York, New Haven & Hartford by the Standard Motor Truck Company.

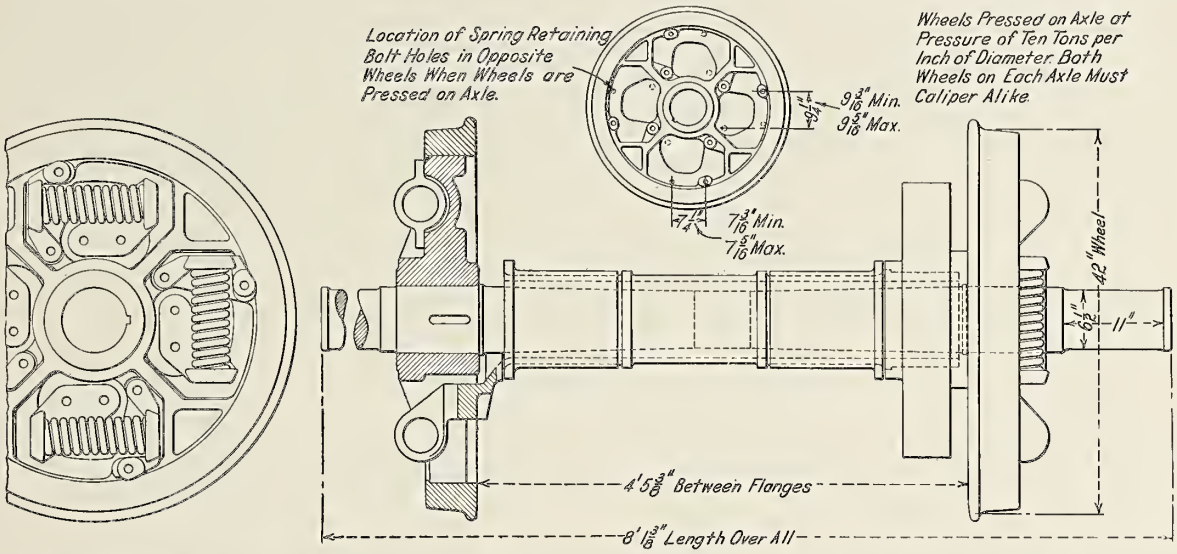

Fig. 2240—Details of Drive on Standard Motor Truck. Built for the New York, New Haven & Hartford by the Standard Motor Truck Company.

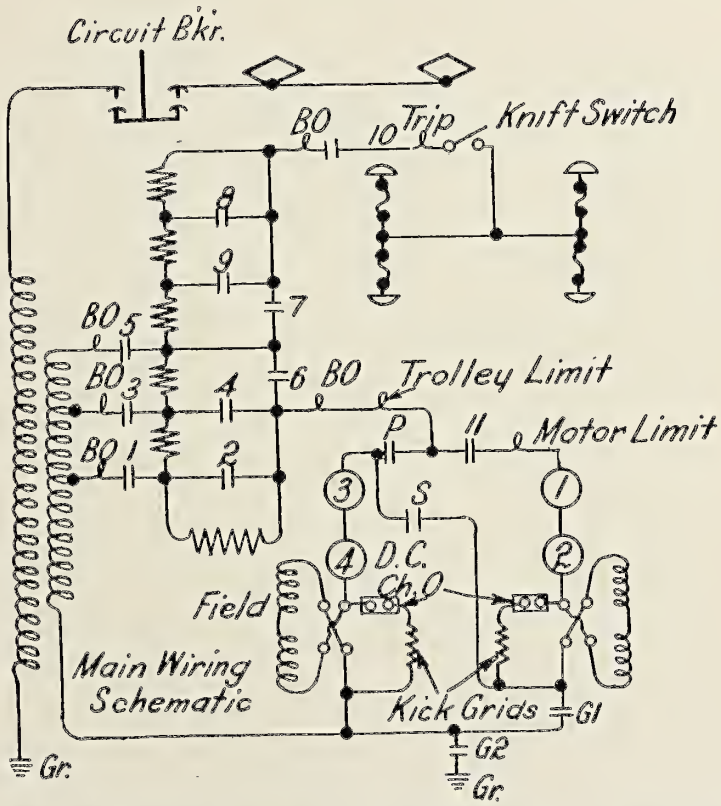

Sequence of Switches.
A.C. Operation.

Step	1	2	3	4	5	6	7	8	9	10	11	P	S	G1	G2
1	o										o	o		o	
2	o	o									o	o		o	
3		o	o								o	o		o	
4		o	o	o							o	o		o	
5		o		o	o						o	o		o	
6		o		o	o	o					o	o		o	

D.C. Operation

Step	1	2	3	4	5	6	7	8	9	10	11	P	S	G1	G2
1										o	o		o		o
2								o		o	o		o		o
3								o	o	o	o		o		o
4		o						o	o	o	o		o		o
5		o		o				o	o	o	o		o		o
6		o		o		o		o	o	o	o		o		o
7		o		o		o	o	o	o	o	o		o		o
Tran										o	o		o	o	o
8										o	o	o		o	o
9								o		o	o	o		o	o
10								o	o	o	o	o		o	o
11		o						o	o	o	o	o		o	o
12		o		o				o	o	o	o	o		o	o
13		o		o		o		o	o	o	o	o		o	o
14		o		o		o	o	o	o	o	o	o		o	o

Fig. 2241—Wiring Diagram for Alternating Current Electric Motor Cars. New York, New Haven & Hartford.

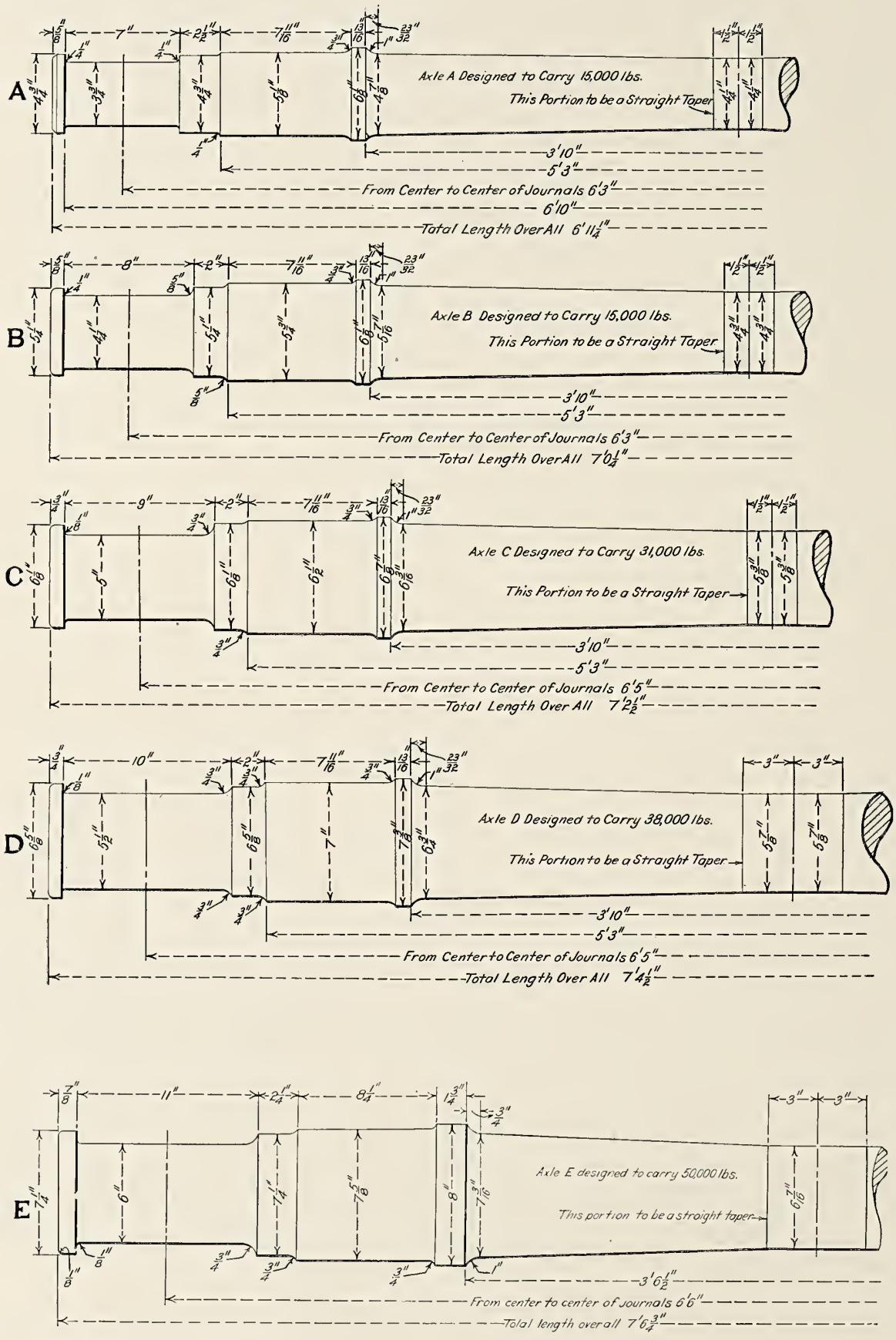

Fig. 2242—Standard Axles Adopted by the American Railway Master Mechanics' Association. (M. M. Sheet 1.)

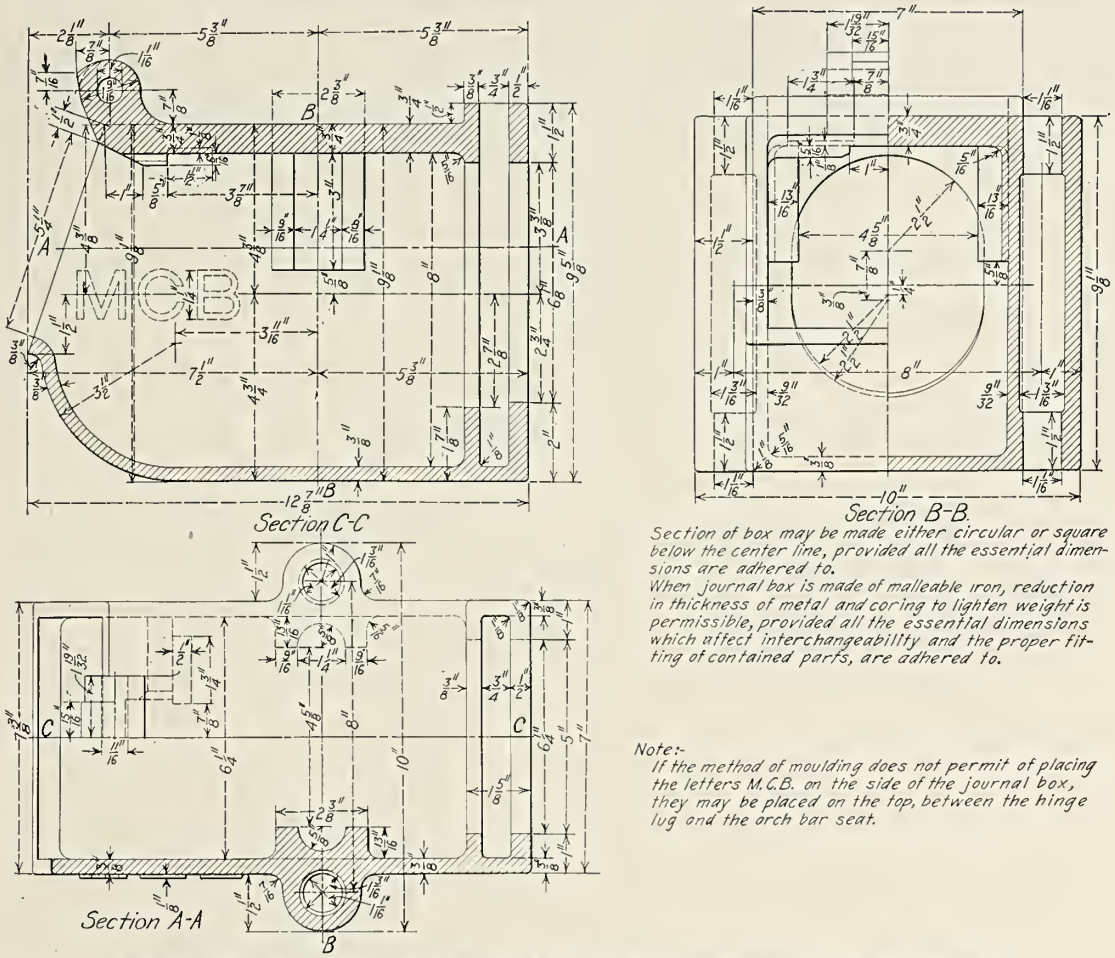

Fig. 2243—Standard Journal Box for 3¾ in. by 7 in. Journal. (M. M. Sheet 2.)

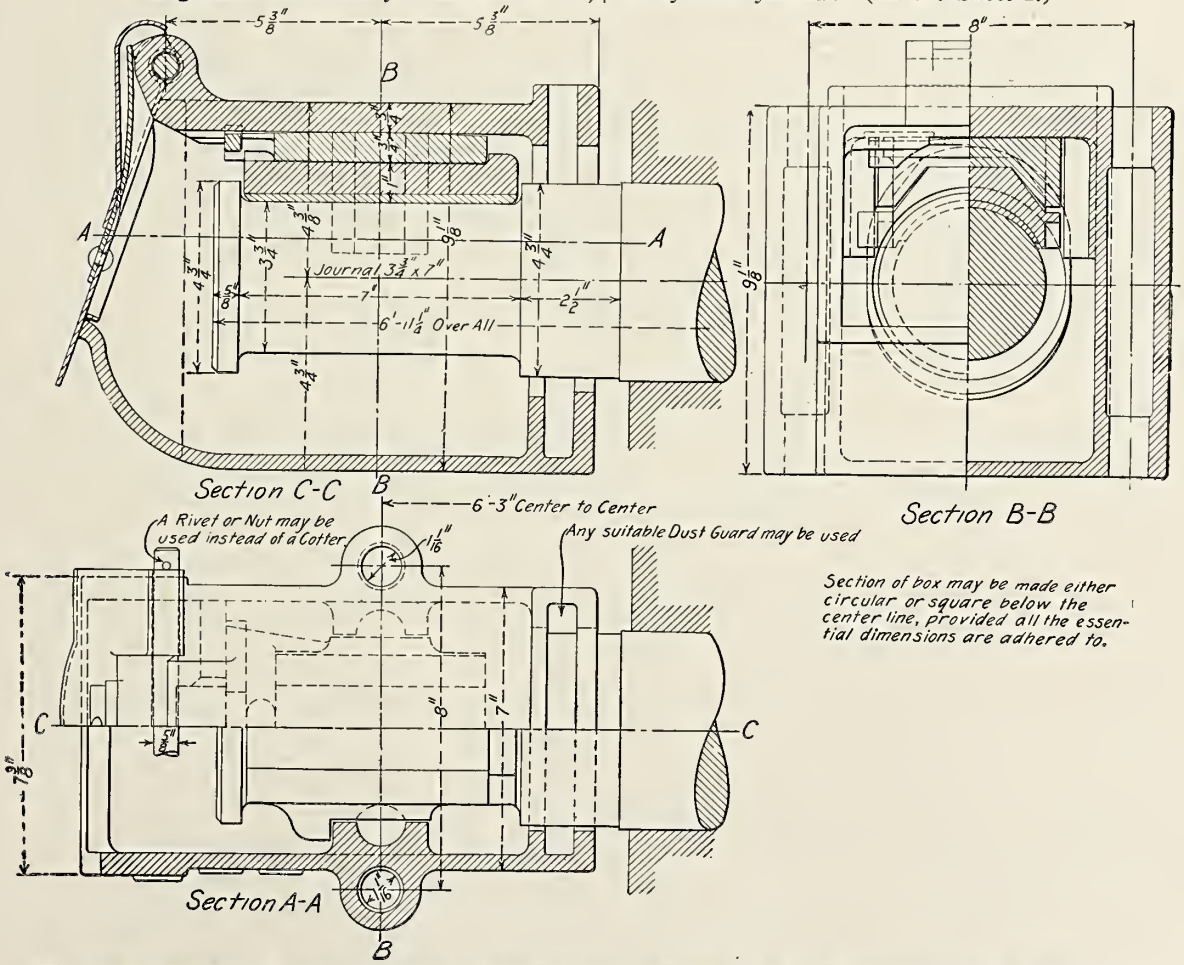

Fig. 2244—Standard Journal Box and Contained Parts for 3¾ in. by 7 in. Journal. (M. M. Sheet 3.)

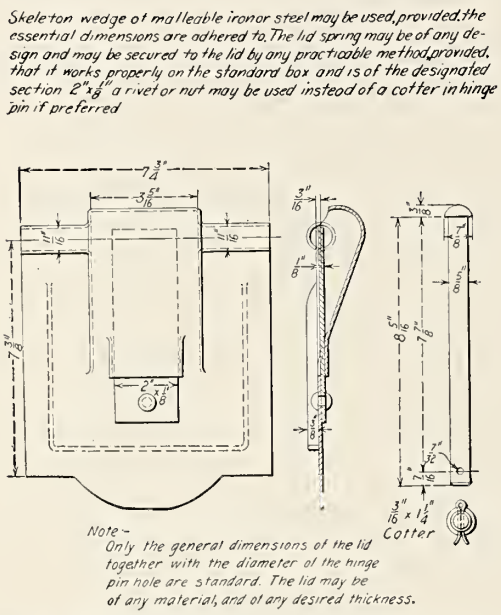

Fig. 2245—Standard Journal Box Lid and Lid Pin for 3¾ in. by 7 in. Journal. (M. M. Sheet 4.)

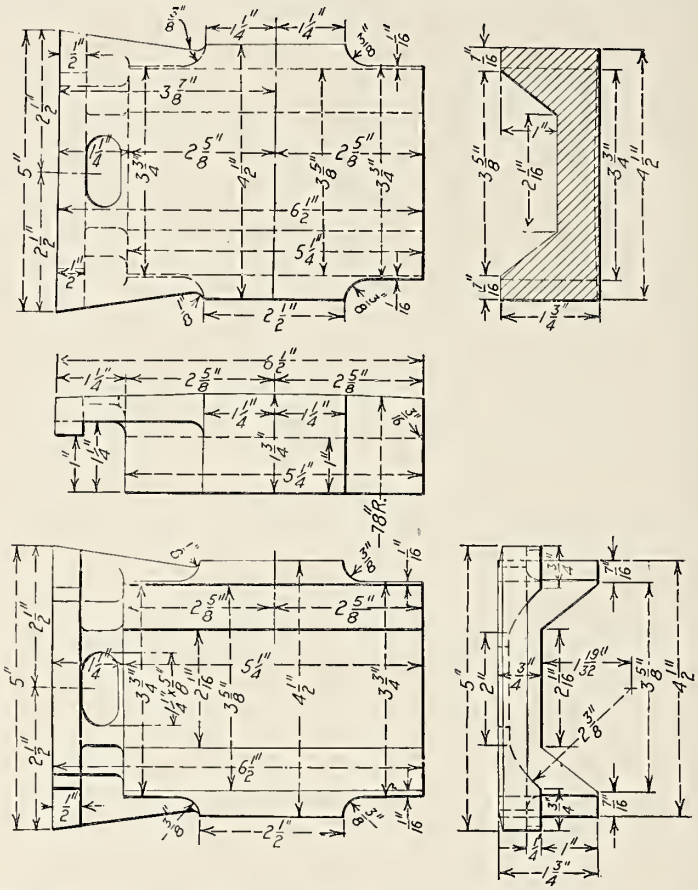

Fig. 2246—Standard Journal Box Wedge for 3¾ in. by 7 in. Journal. (M. M. Sheet 4.)

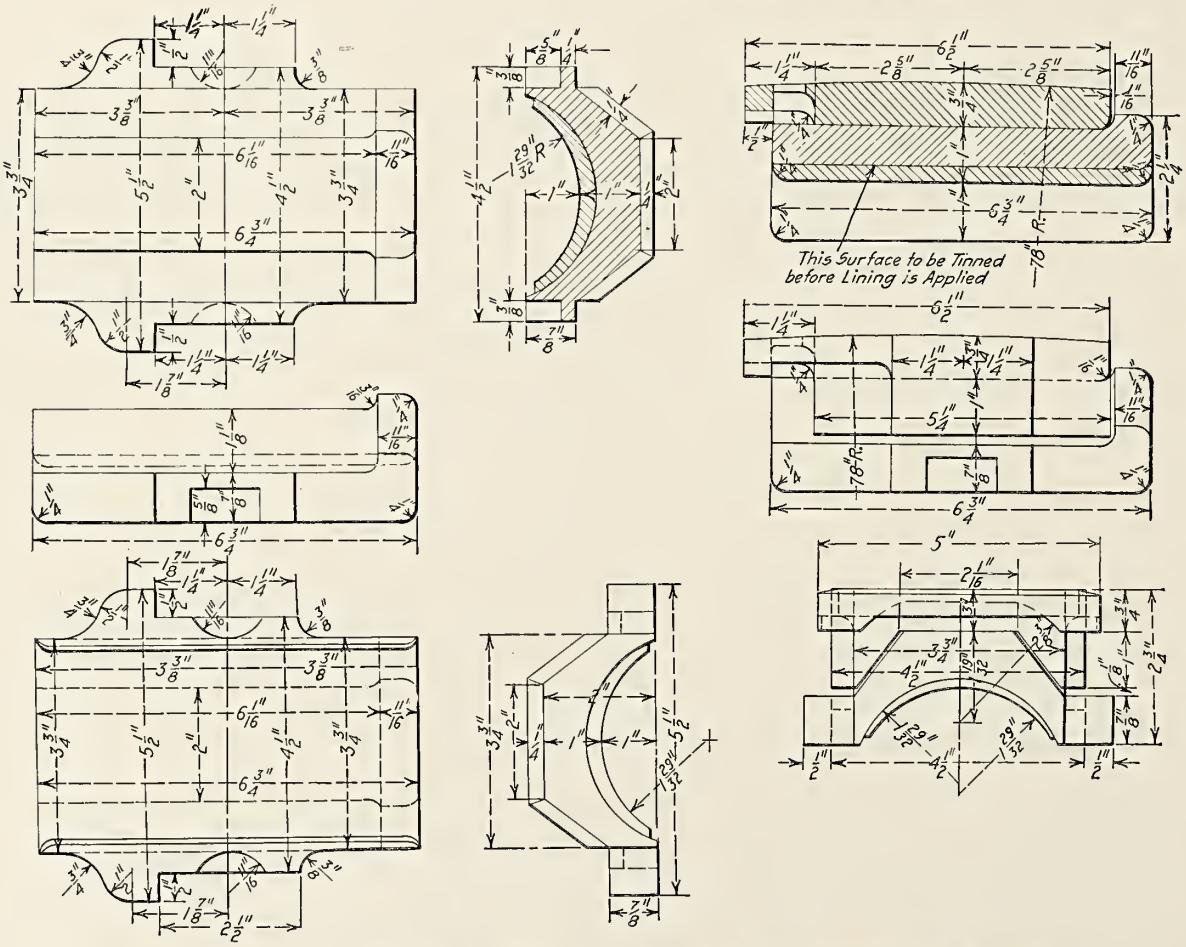

Fig. 2247—Standard Journal Box Bearing for 3¾ in. by 7 in. Journal. (M. M. Sheet 4.)

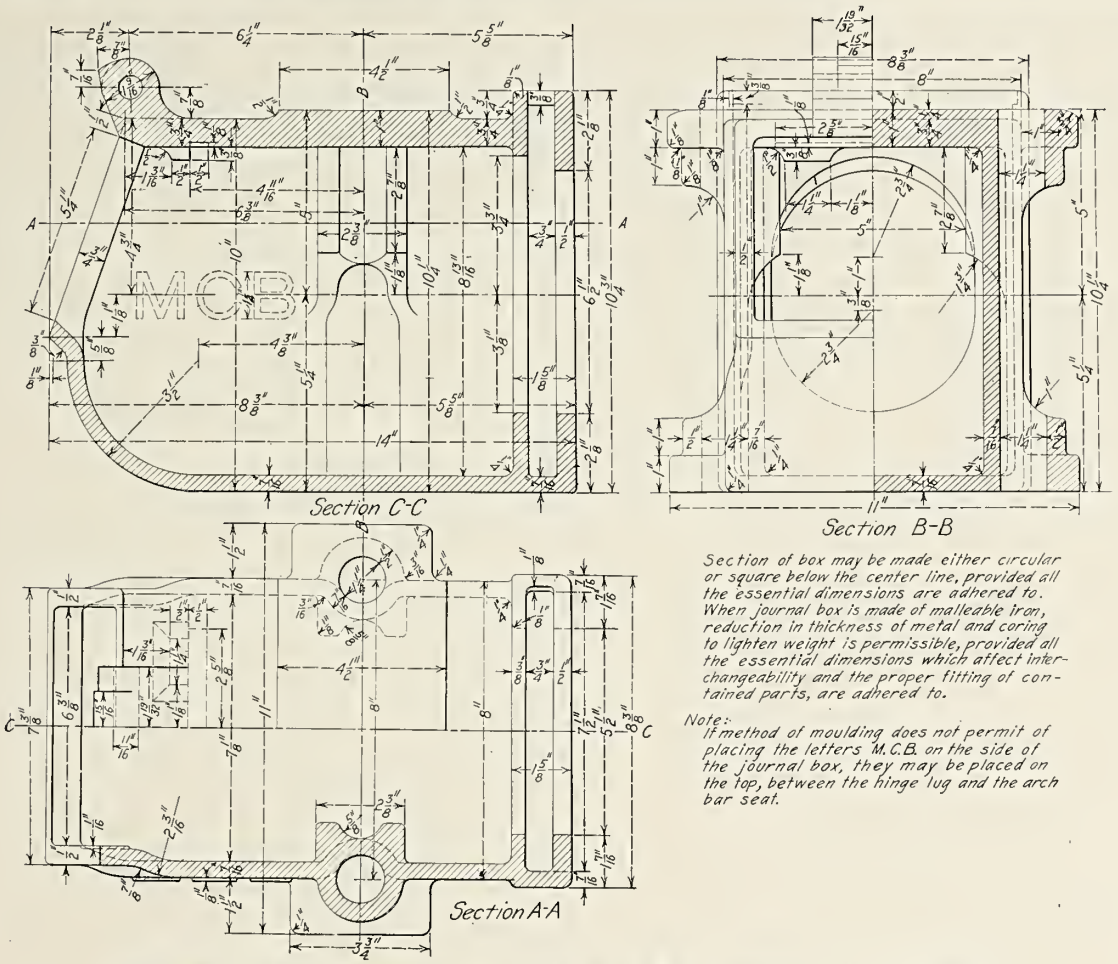

Fig. 2248—Standard Journal Box for 4¼ in. by 8 in. Journal. (M. M. Sheet 5.)

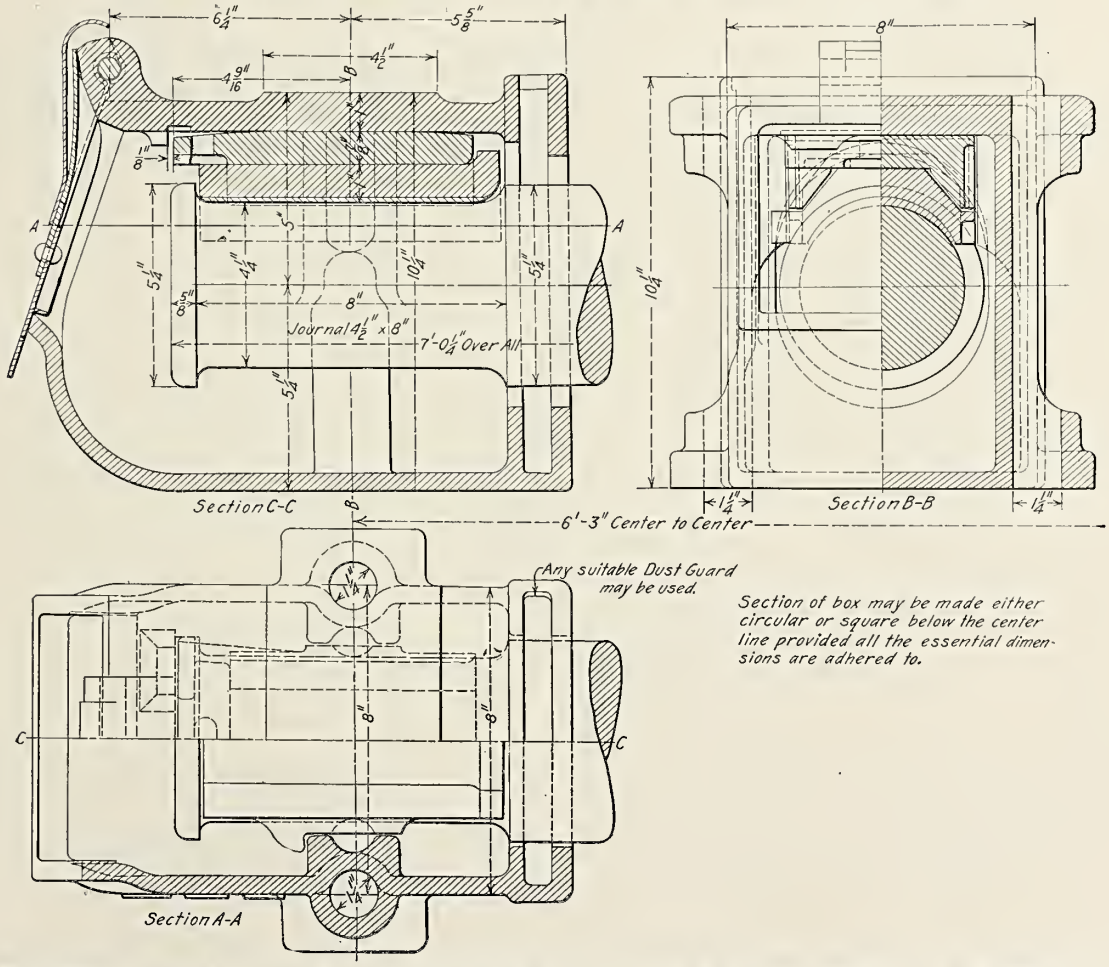

Fig. 2249—Standard Journal Box and Contained Parts for 4¼ in. by 8 in. Journal. (M. M. Sheet 6.)

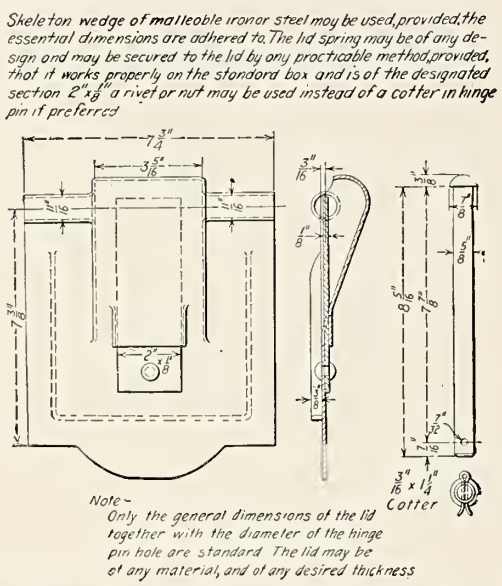

Fig. 2250—Standard Journal Box Lid and Lid Pin for 4¼ in. by 8 in. Journal. (M. M. Sheet 7.)

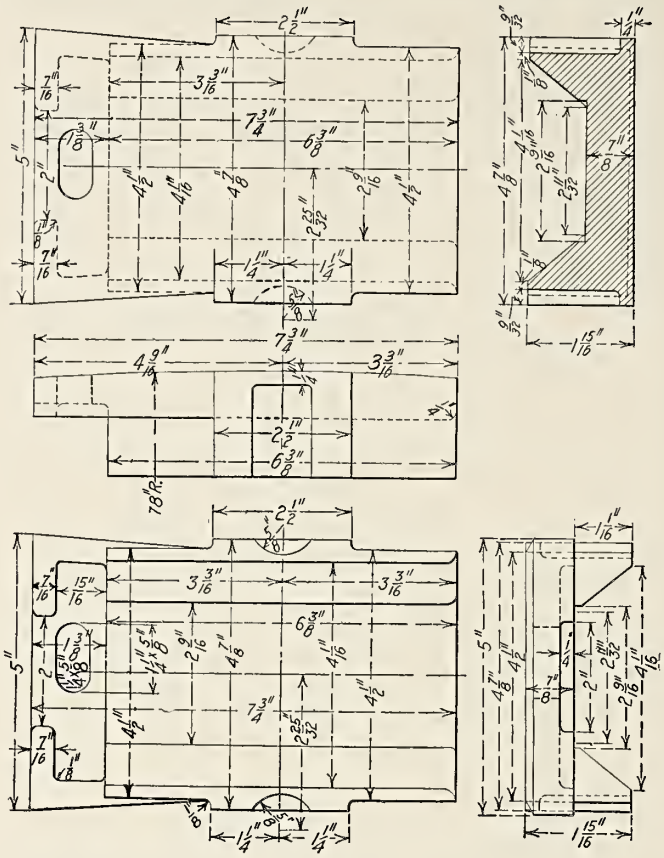

Fig. 2251—Standard Journal Box Wedge for 4¼ in. by 8 in. Journal. (M. M. Sheet 7.)

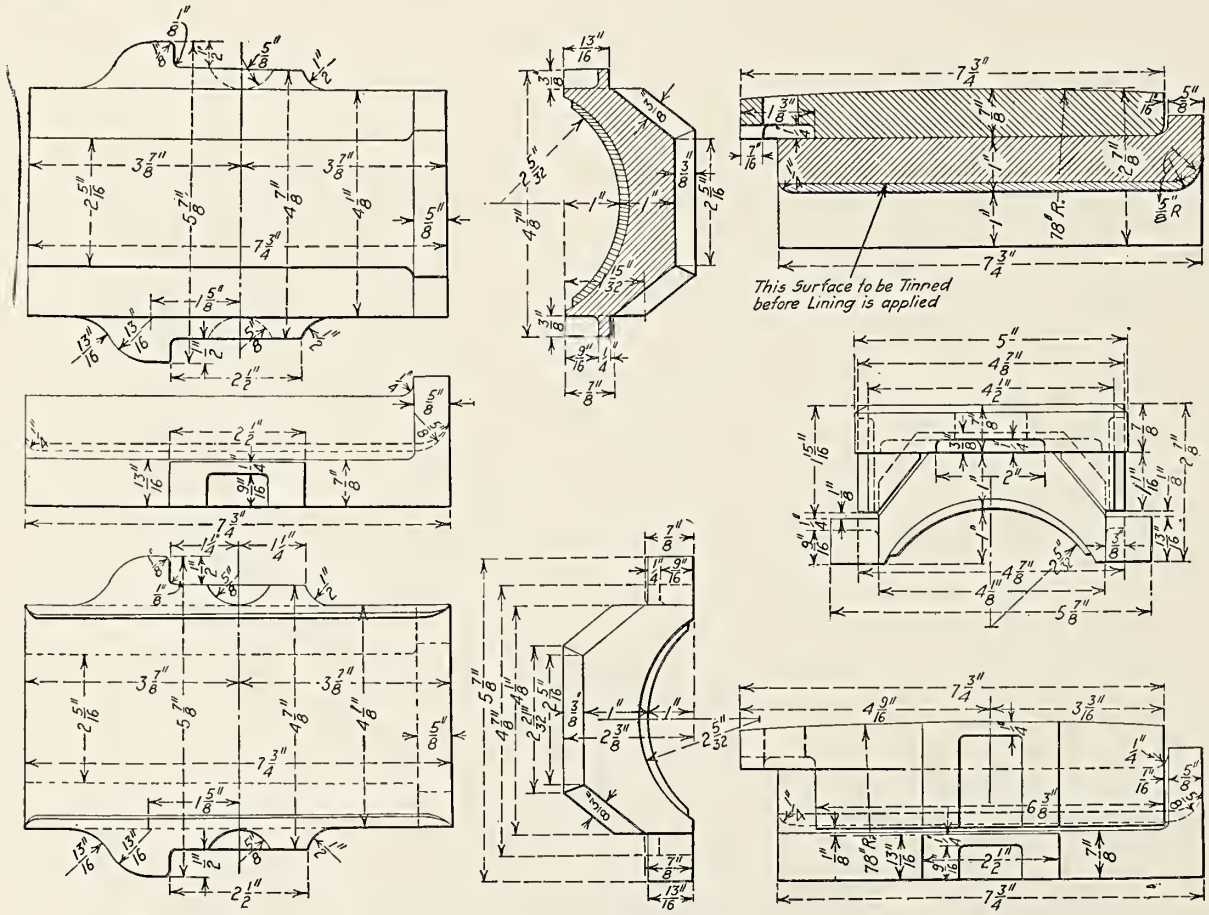

Fig. 2252—Standard Journal Box Bearing for 4¼ in. by 8 in. Journal. (M. M. Sheet 7.)

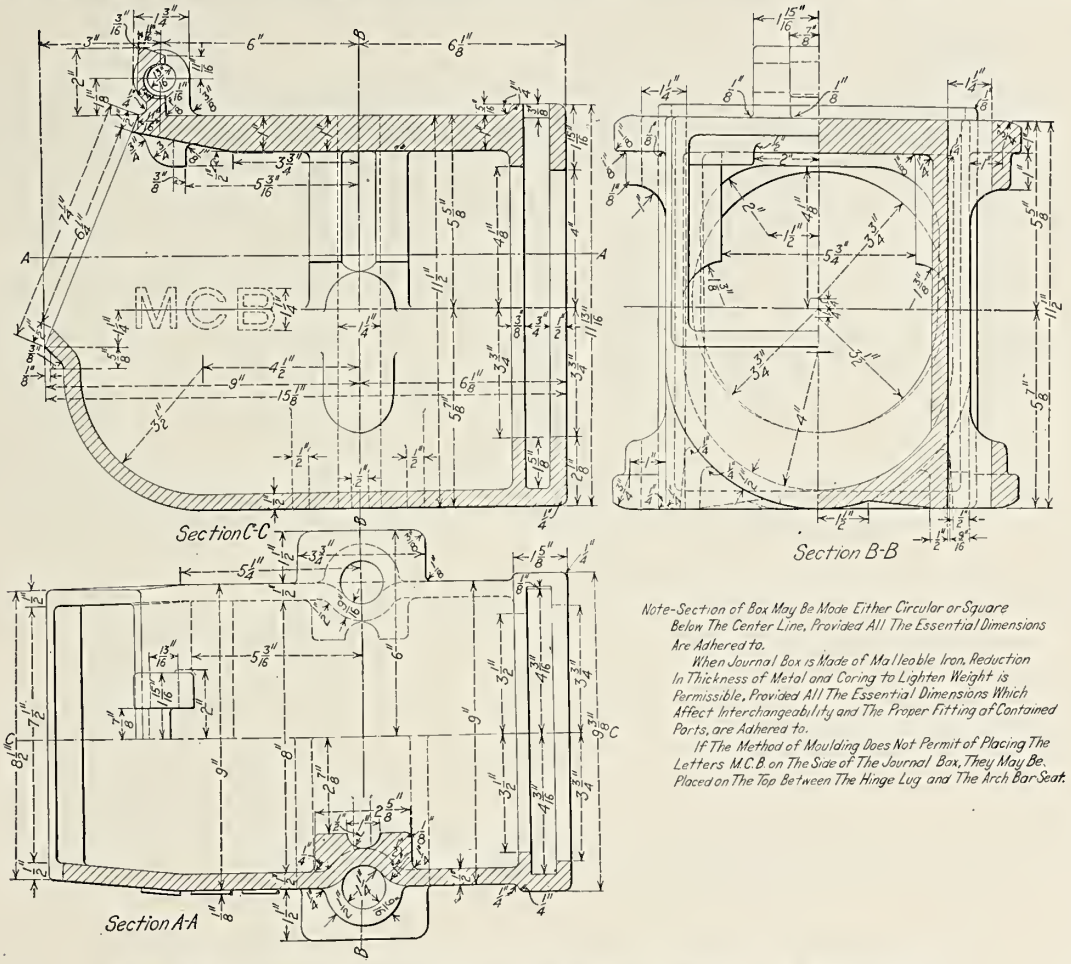

Fig. 2253—Standard Journal Box in 5 in. by 9 in. Journal. (M. M. Sheet 8.)

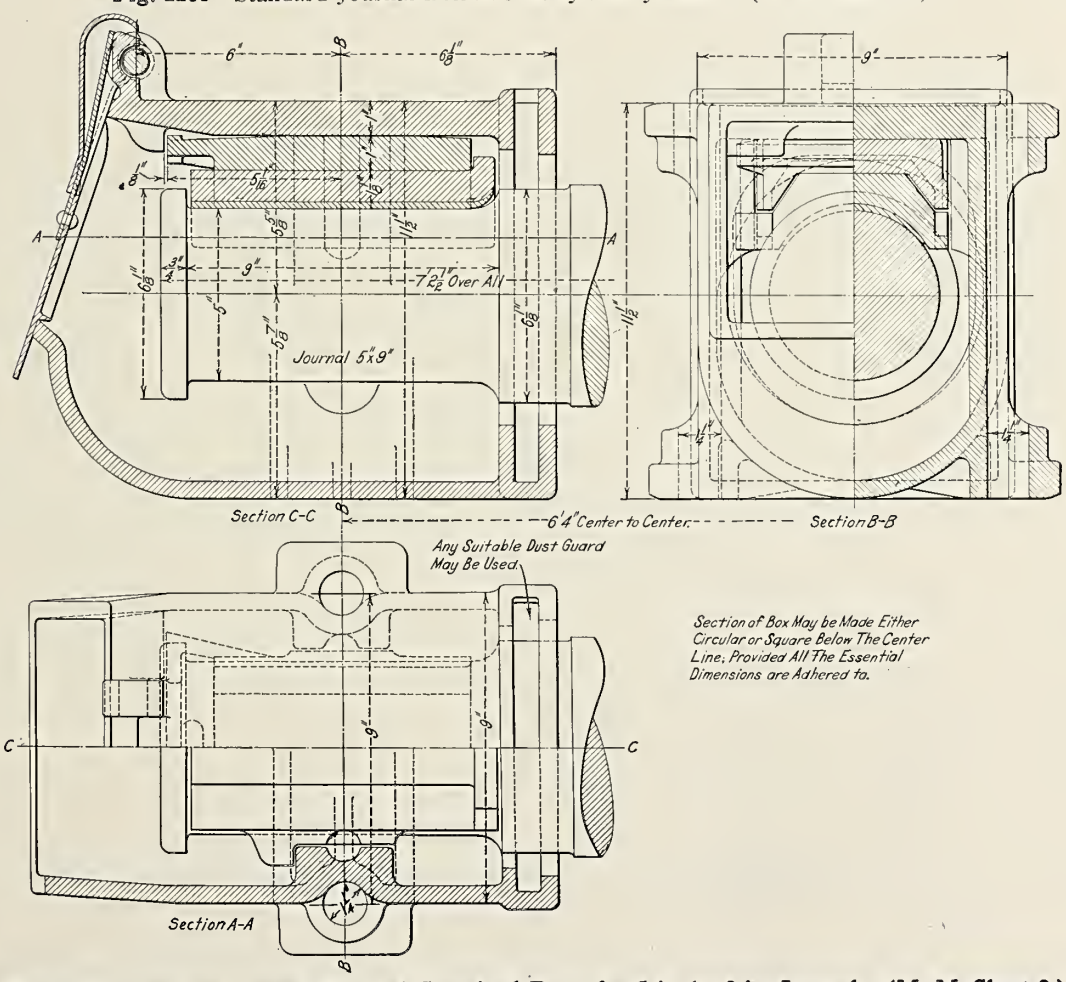

Fig. 2254—Standard Journal Box and Contained Parts for 5 in. by 9 in. Journal. **(M. M. Sheet 9.)**

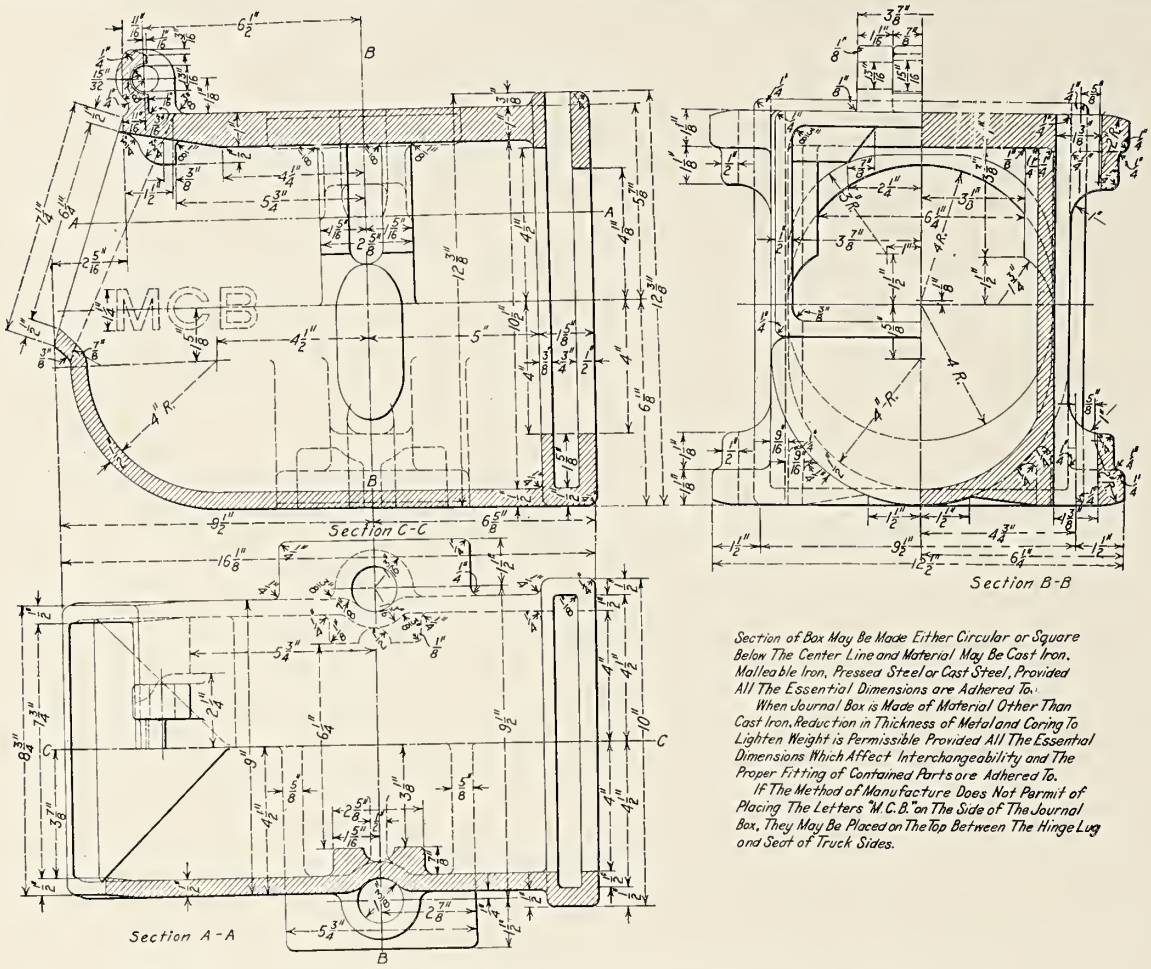

Fig. 2255—Standard Journal Box for 5½ in. by 10 in. Journal. (M. M. Sheet 11.)

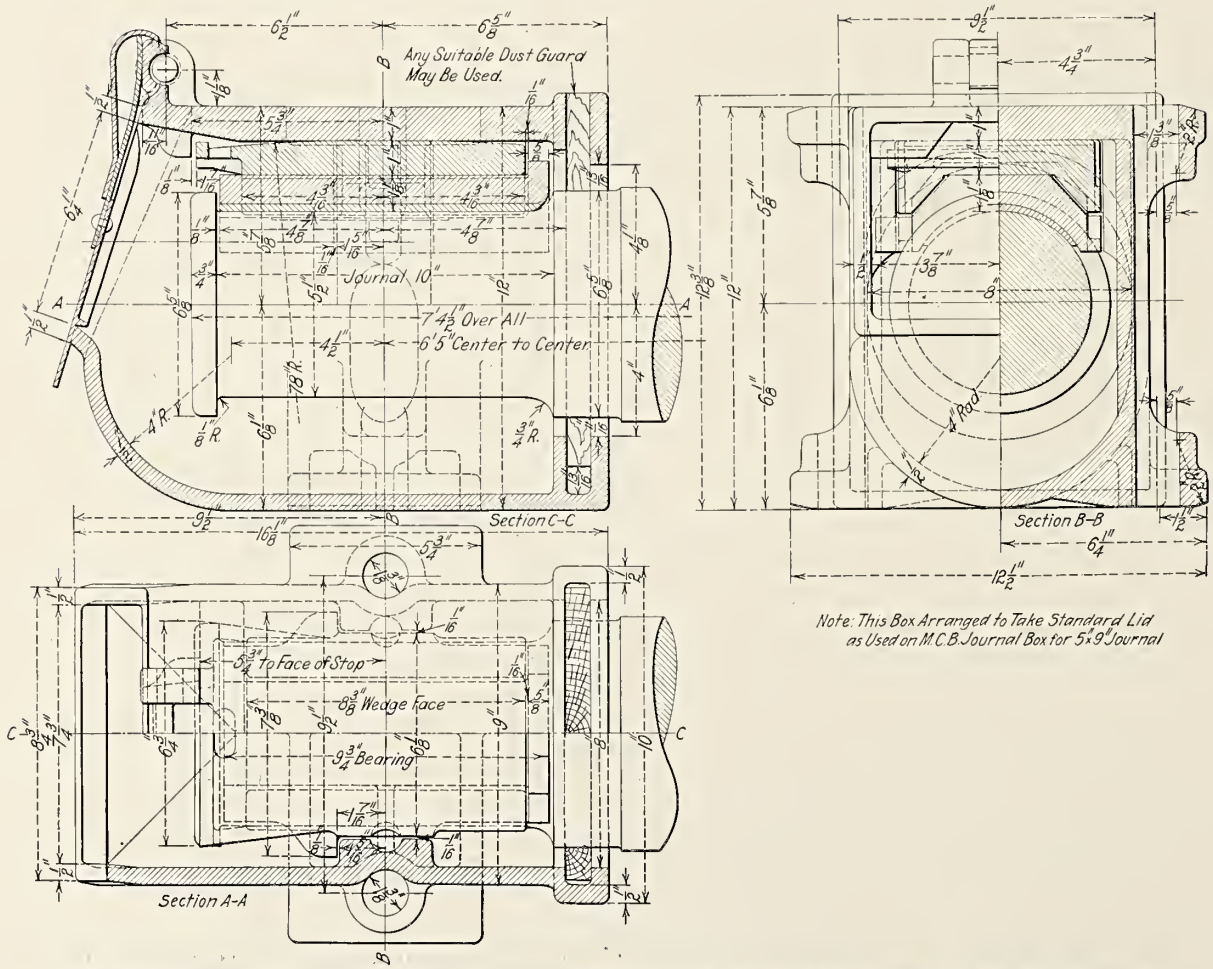

Fig. 2256—Standard Journal Box and Contained Parts for 5½ in. by 10 in. Journal. (M. M. Sheet 12.)

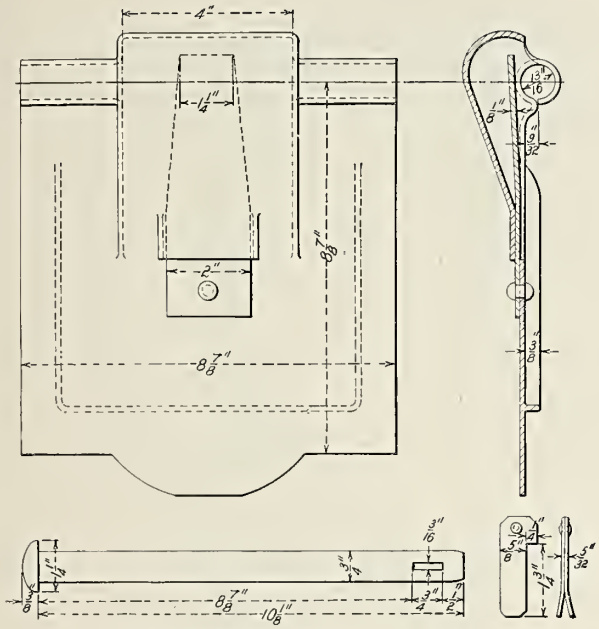

Only The General Dimensions of Lid, Together With The Diameter of Hinge Pin Hole to be Standard. The Lid May be of Any Material and any Desired Thickness.

Wedge shall be of Malleable Iron, Forged or Cast Steel
The Lid Spring may be of any design and may be secured to the Lid by any practicable method provided that it works properly on the Standard Box and is of the designated Section 2" x 1/2" A Rivet or nut may be used instead of a Cotter in Hinge Pin if preferred.

Fig. 2257—Standard Journal Box Lid and Pin for 5 in. by 9 in. Journal. (M. M. Sheet 10.)

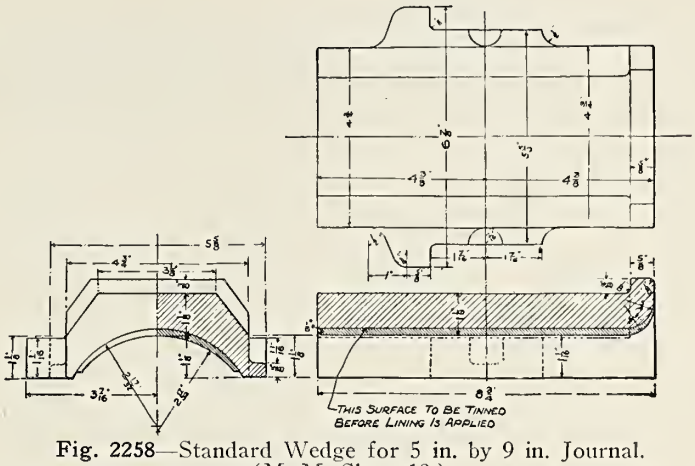

Fig. 2258—Standard Wedge for 5 in. by 9 in. Journal. (M. M. Sheet 10.)

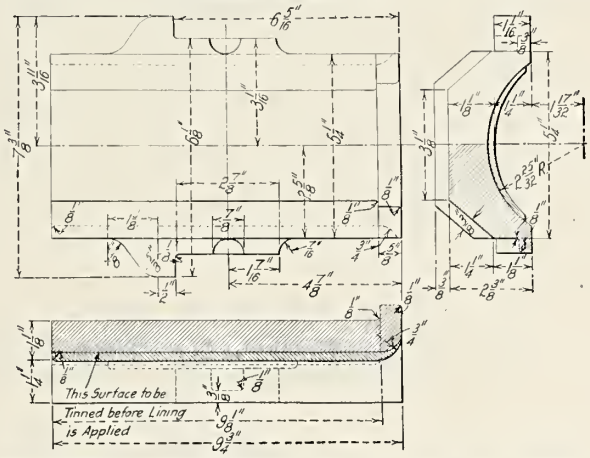

Fig. 2259—Standard Bearing for 5 in. by 9 in. Journal. (M. M. Sheet 10.)

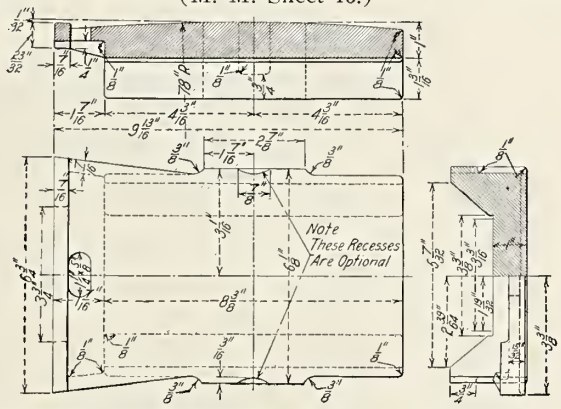

Fig. 2261—Standard Wedge for 5½ in. by 10 in. Journal. (M. M. Sheet 13.)

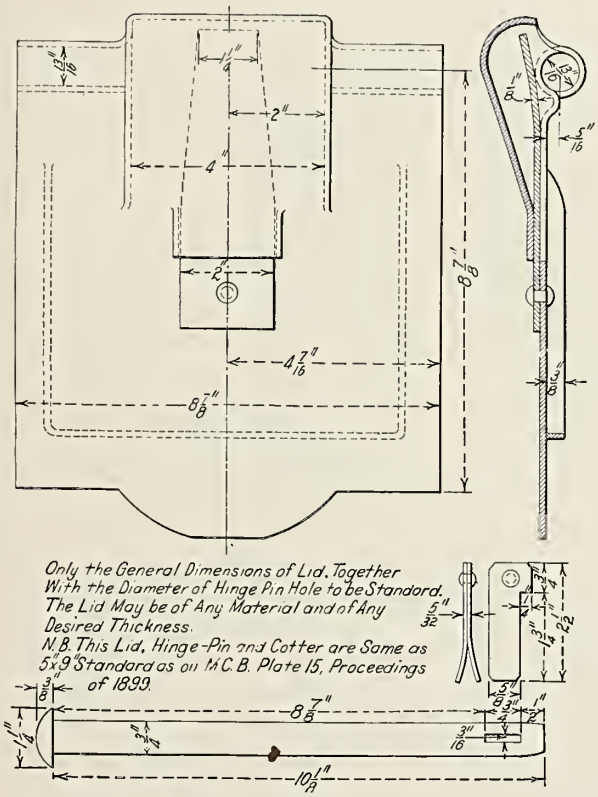

Only the General Dimensions of Lid, Together With the Diameter of Hinge Pin Hole to be Standard. The Lid May be of Any Material and of Any Desired Thickness.
N.B. This Lid, Hinge-Pin and Cotter are Same as 5x9" Standard as on M.C.B. Plate 15, Proceedings of 1899.

Wedge shall be of Forged or Cast Steel
The Lid Spring may be of any design and may be secured to the Lid by any practicable method provided that it works properly on the standard box and is of the designated section 2" x 1/2".
A Rivet or Nut may be used instead of a Cotter in Hinge Pin if preferred.

Fig. 2260—Standard Journal Box Lid and Pin for 5½ in. by 10 in. Journal. (M. M. Sheet 13.)

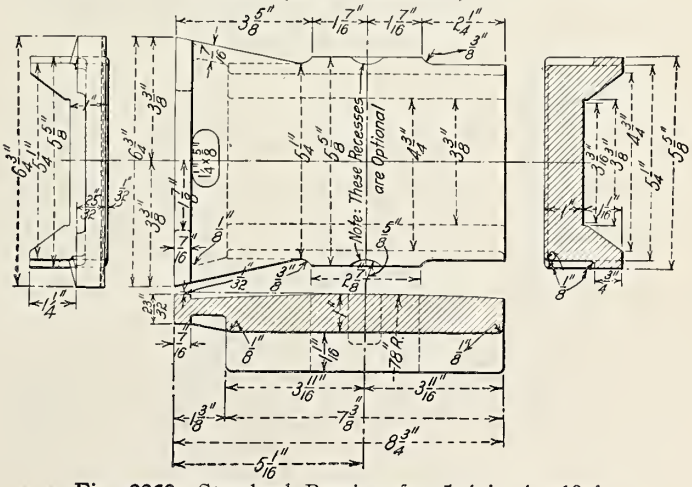

Fig. 2262—Standard Bearing for 5½ in. by 10 in Journal. (M. M. Sheet 13.)

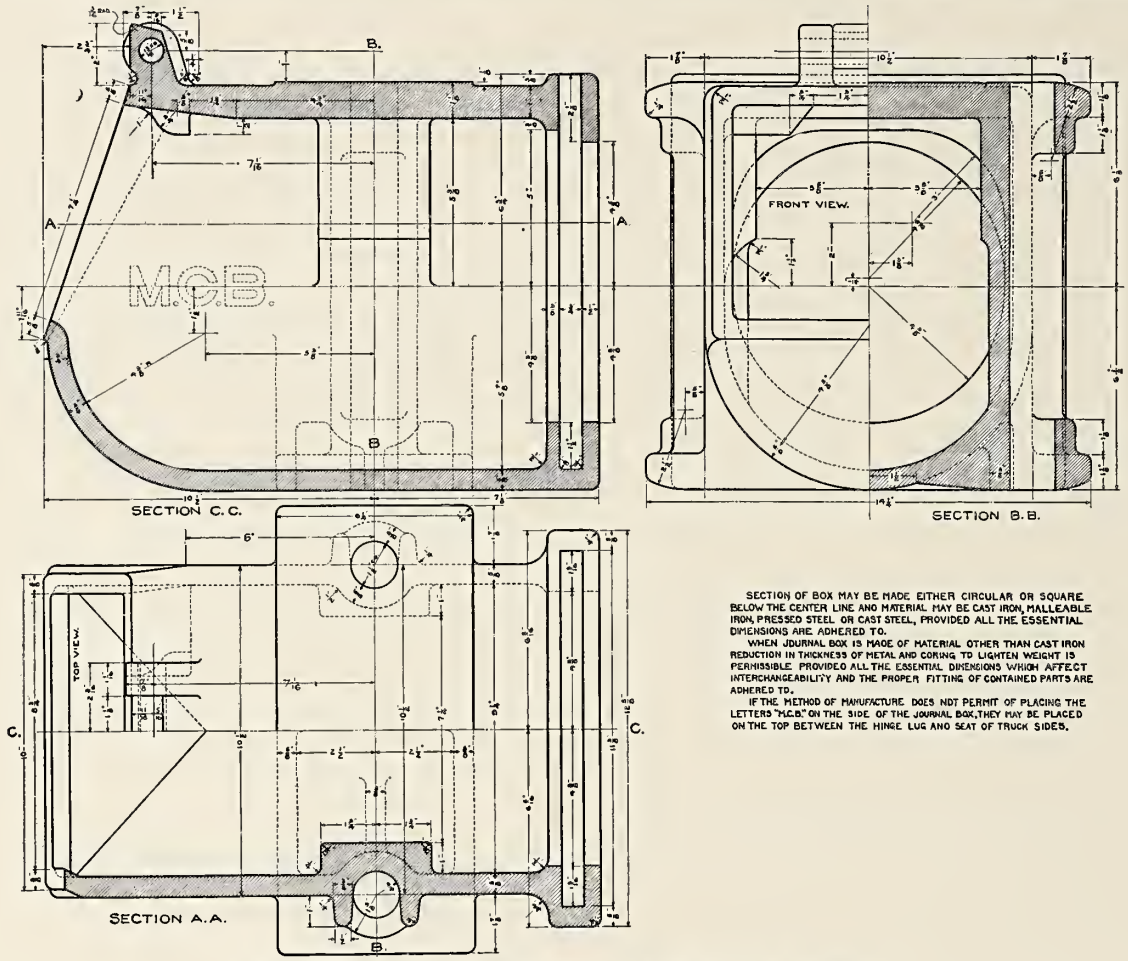

Fig. 2263—Standard Journal Box for 6 in. by 11 in. Journal.

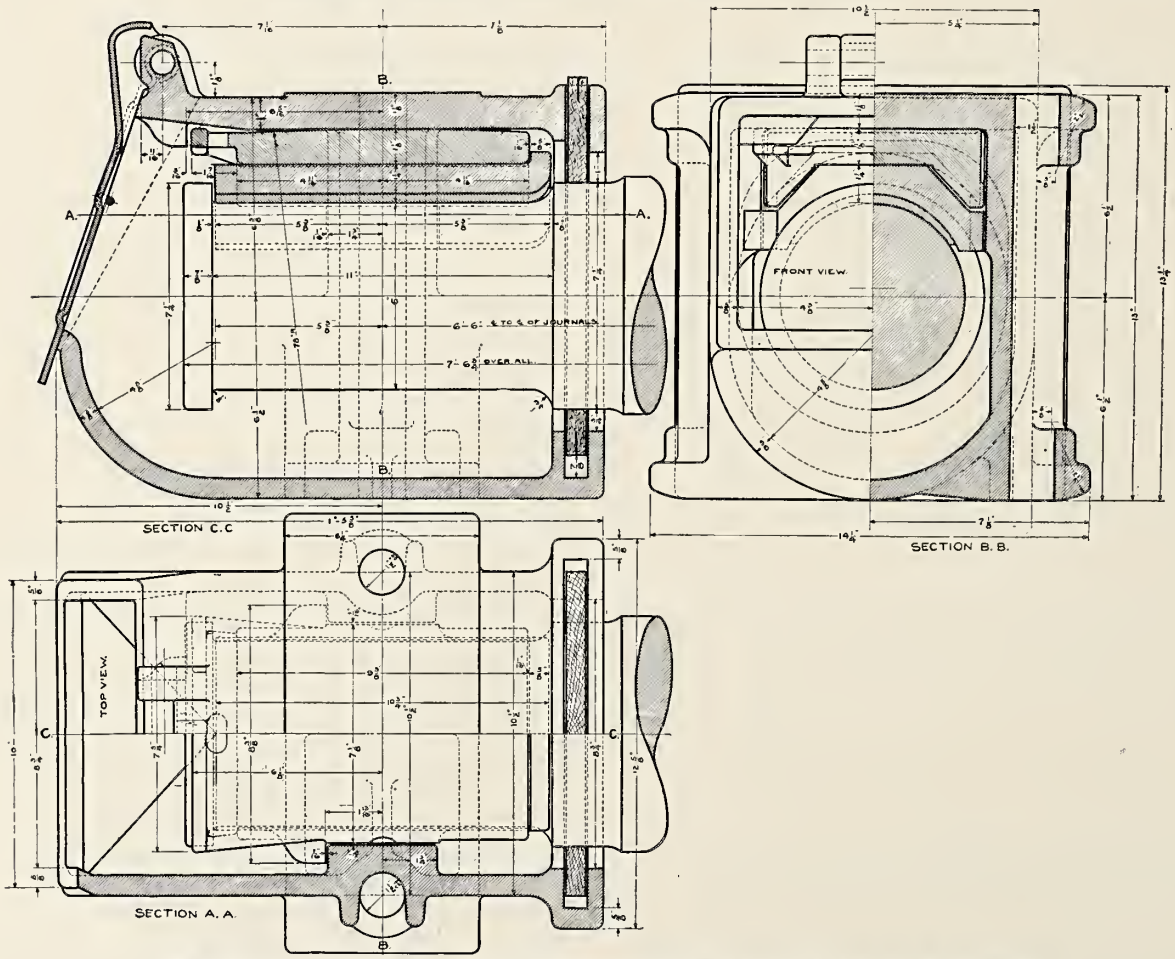

Fig. 2264—Standard Journal Box and Contained Parts for 6 in by 11 in. Journal.

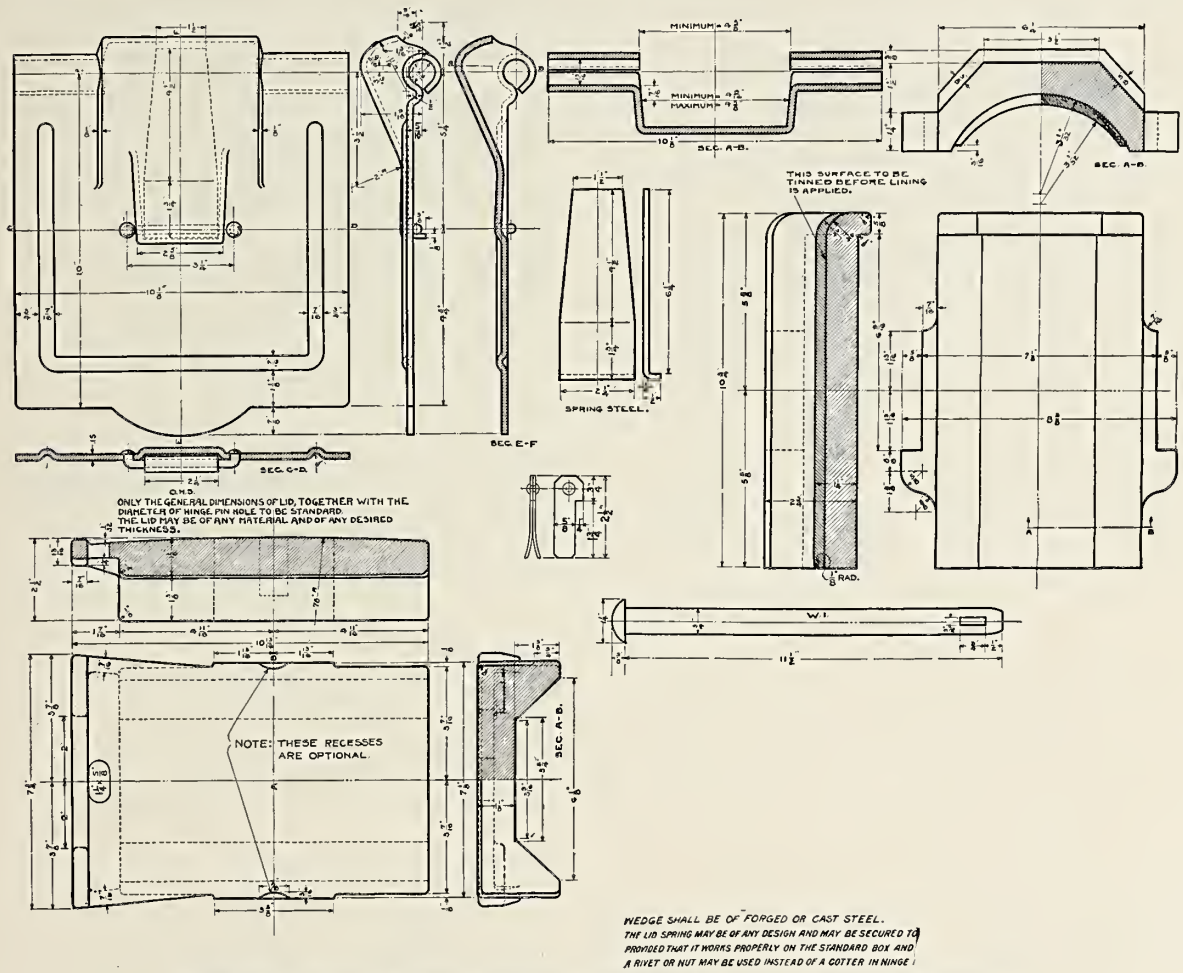

Fig. 2265—Standard Journal Bearing, Wedge and Lid for 6 in. by 11 in Journal.

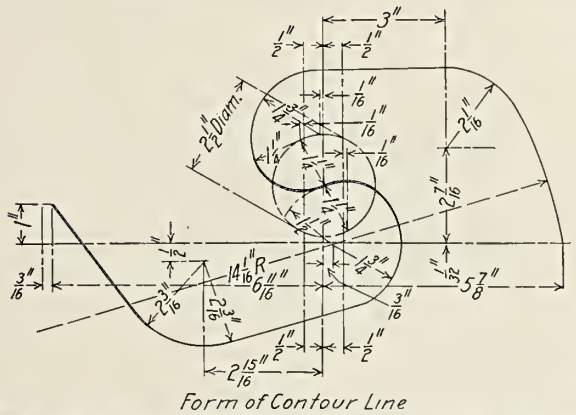

Fig. 2266—Standard Coupler Contour Line. (M. M. Sheet 14.)

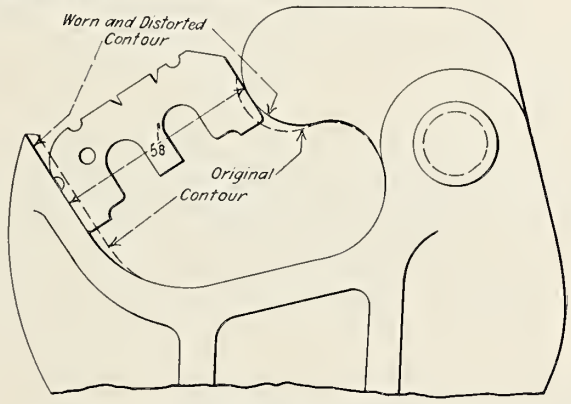

Fig. 2267—Standard Worn and Distorted Coupler Contour. (M. M. Sheet 14.)

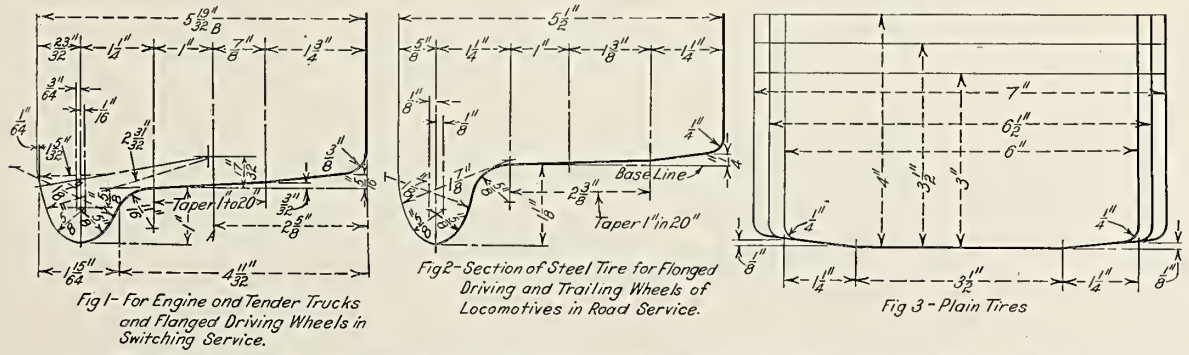

Fig. 2268—Standard Sections of Tires for Driving and Truck Wheels. (M. M. Sheet 14.)

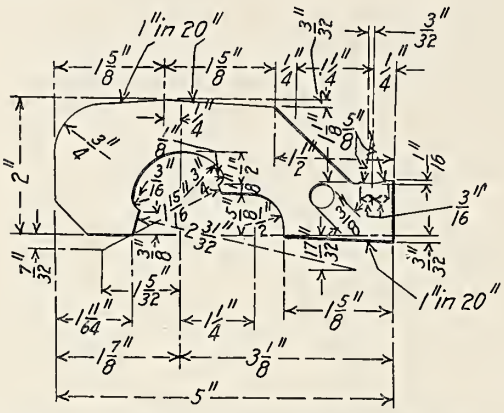

Maximum Flange Thickness Gage for Cast Iron Wheels and Maximum Flange Thickness, Height and Throat Radius Gage for Solid Steel and Steel Tired Wheels

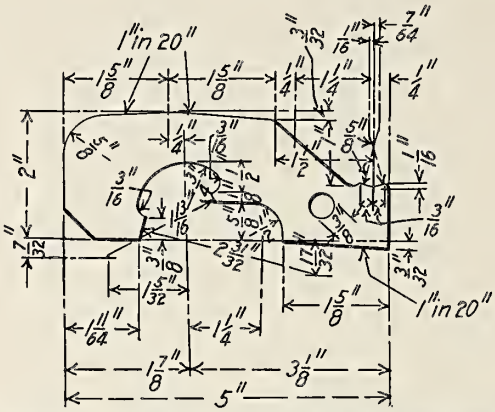

Minimum Flange Thickness Gage for Cast Iron Wheels and Minimum Flange Thickness, Height and Throat Radius Gauge for Solid Steel and Steel Tired Wheels

Fig. 2269—Standard Flange Thickness Gages for Cast Iron Wheels and Flange Thickness, Height and Throat Radius Gage for Solid Steel and Steel Tired Wheels. (M. M. Sheet 14.)

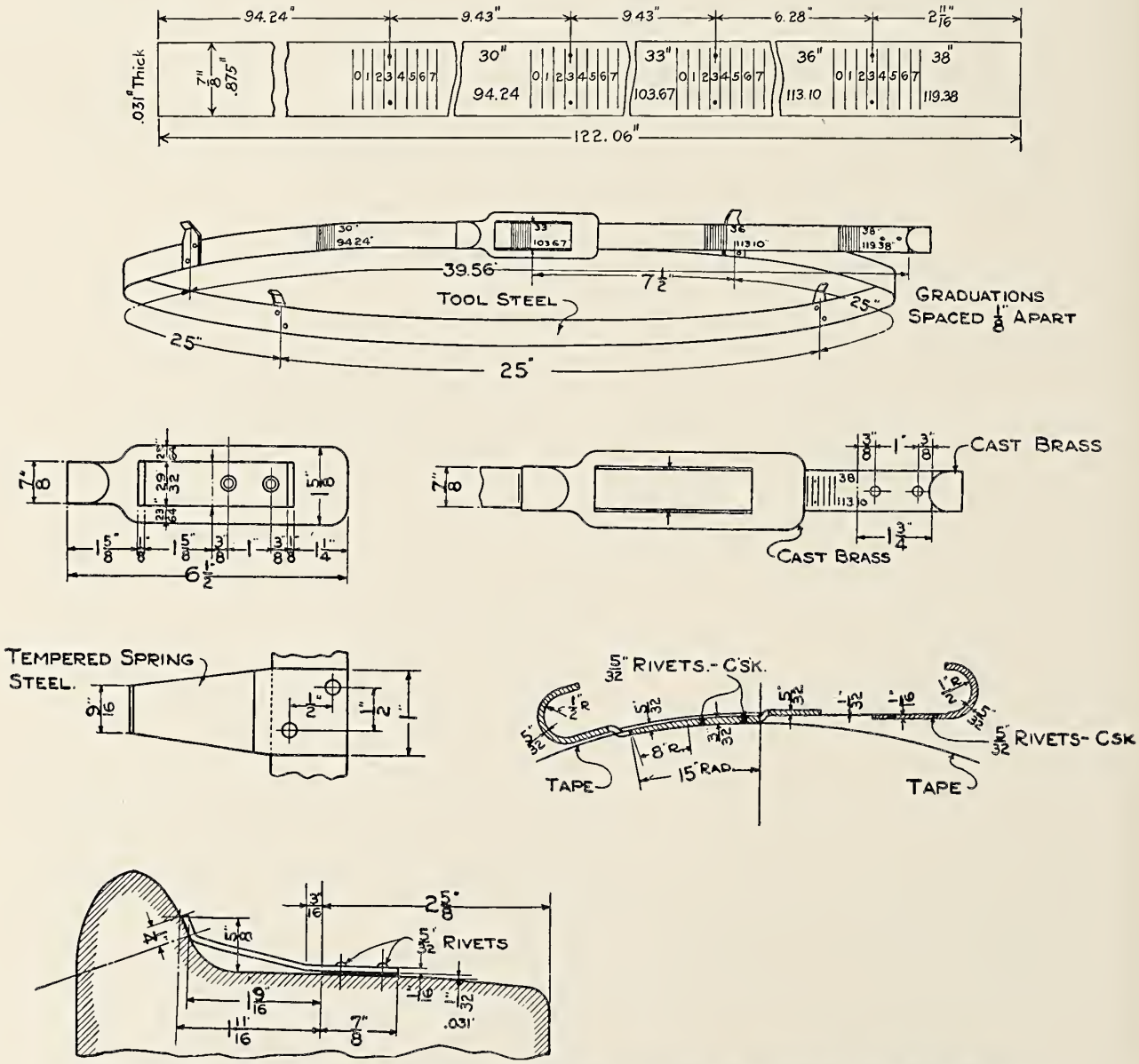

Fig. 2270—Standard Wheel Circumference Measure for Cast Iron Wheels. (M. M. Sheet 17.)

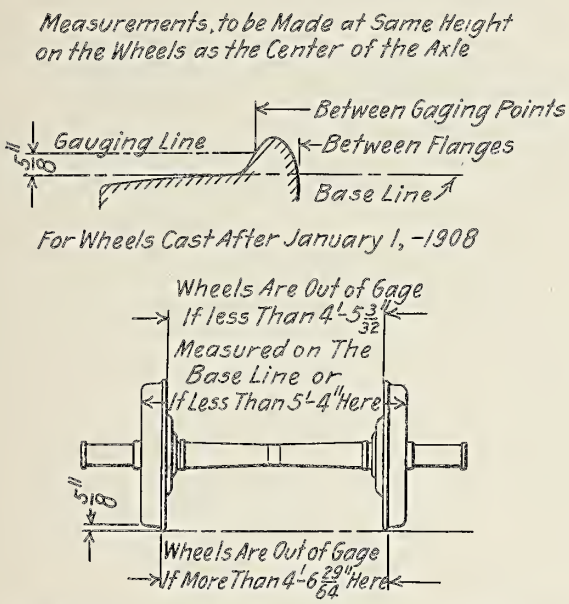

Fig. 2271—Standard Gaging Points for Wheels. (M. M. Sheet 14.)

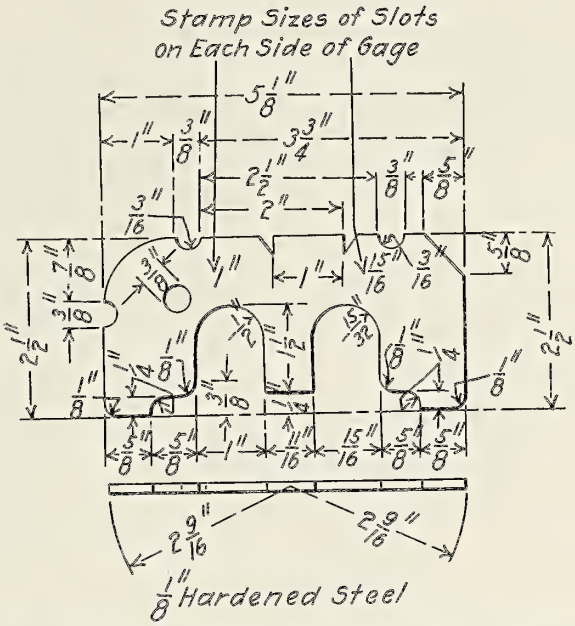

Fig. 2272—Standard Wheel Defect and Worn Coupler Limit Gage. (M. M. Sheet 14.)

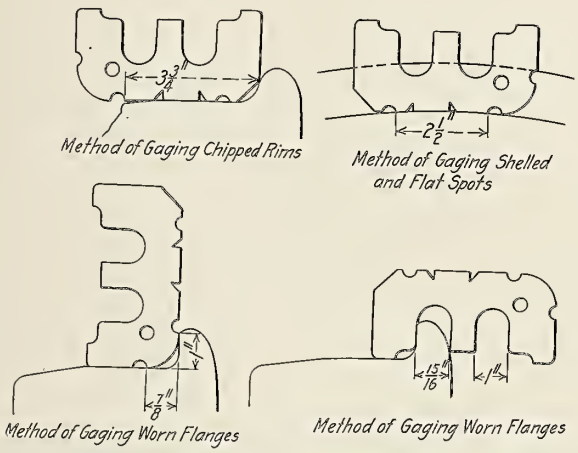

Fig. 2273—Standard Method of Gaging Worn Wheels. (M. M. Sheet 14.)

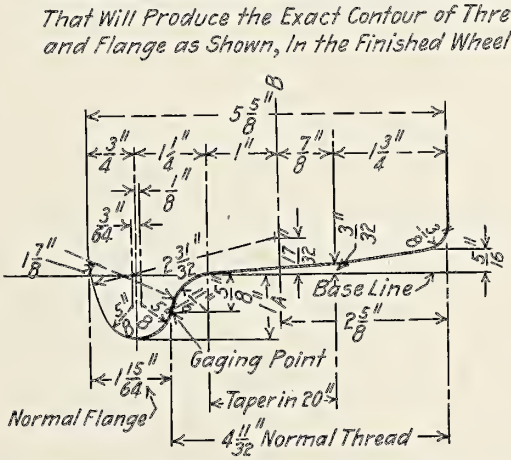

Fig. 2274—Standard Wheel Tread and Flange for Cast Iron Wheels. (M. M. Sheet 14.)

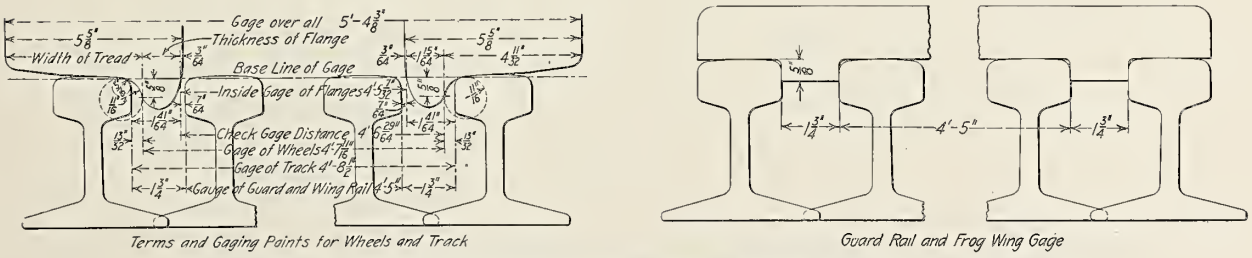

Fig. 2275—Recommended Practice for Wheel and Track Gages. (M. M. Sheet A.)

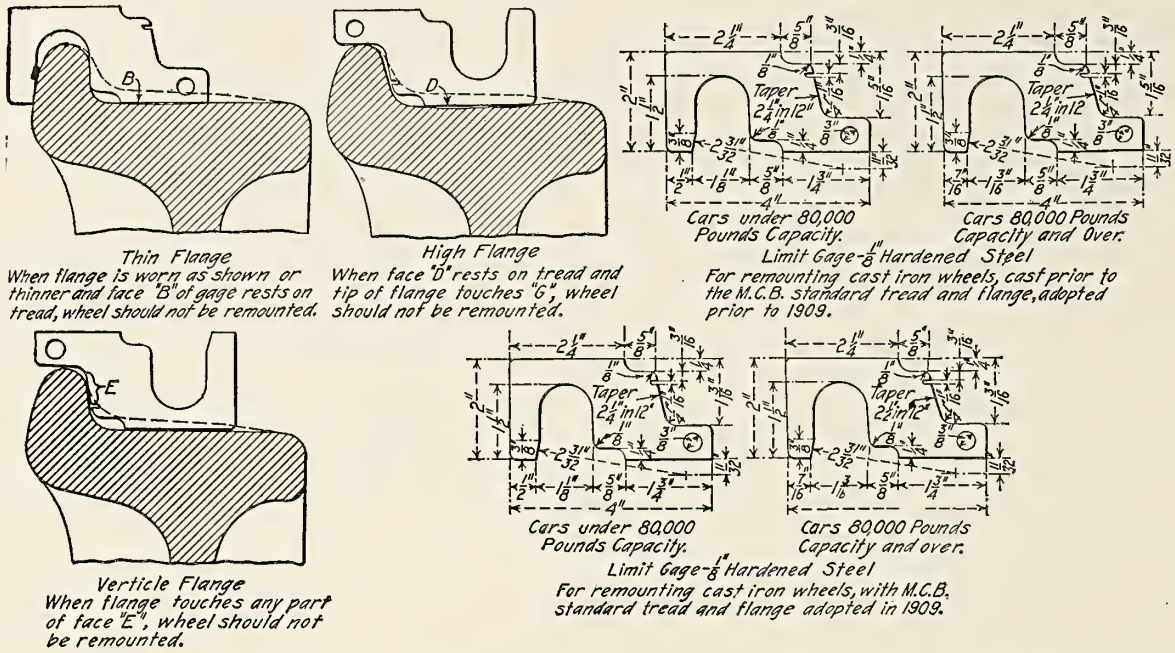

Fig. 2276—Recommended Practice for Limit Gage for Remounting Cast Iron Wheels. (M. M. Sheet A.)

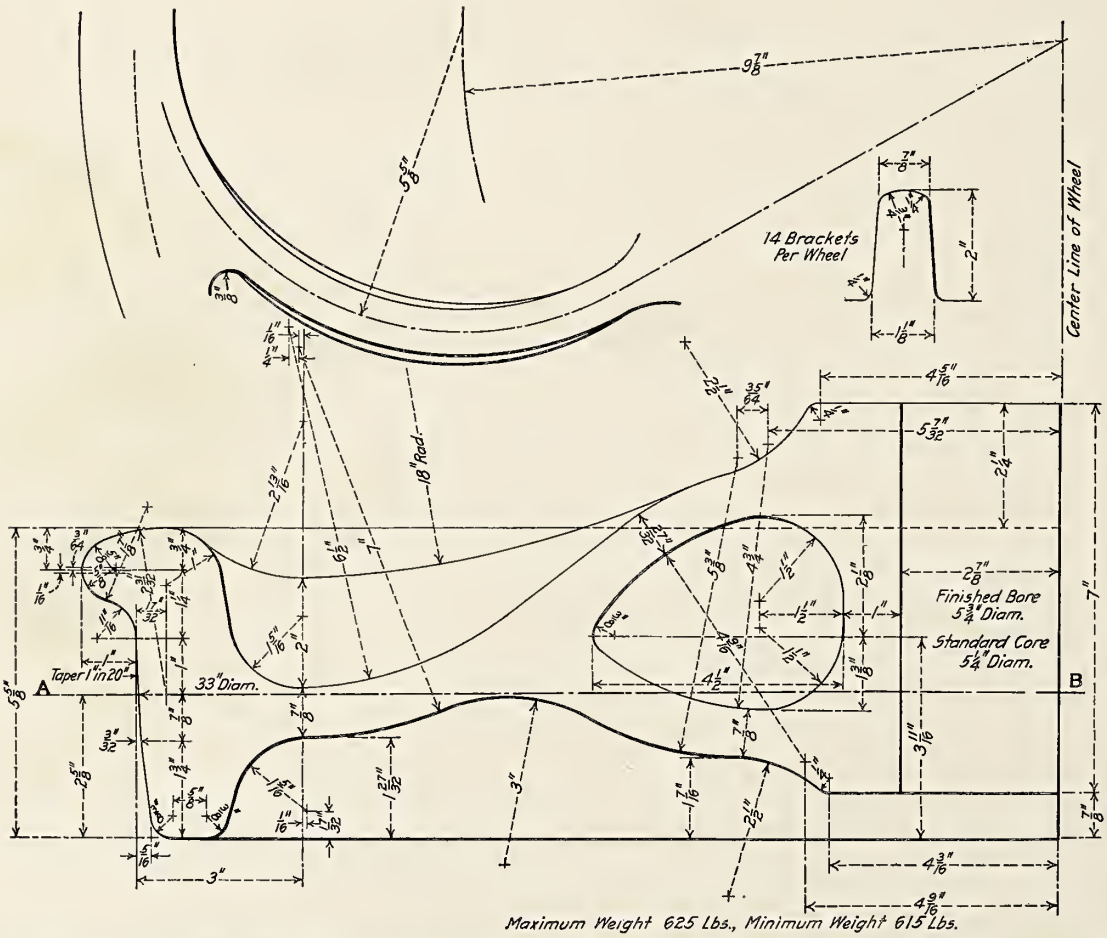

Fig. 2277—Recommended Practice for 33 in. Cast Iron Wheel for Cars of Maximum Gross Weight Not to Exceed 95,000 lb. (M. M. Sheet E.)

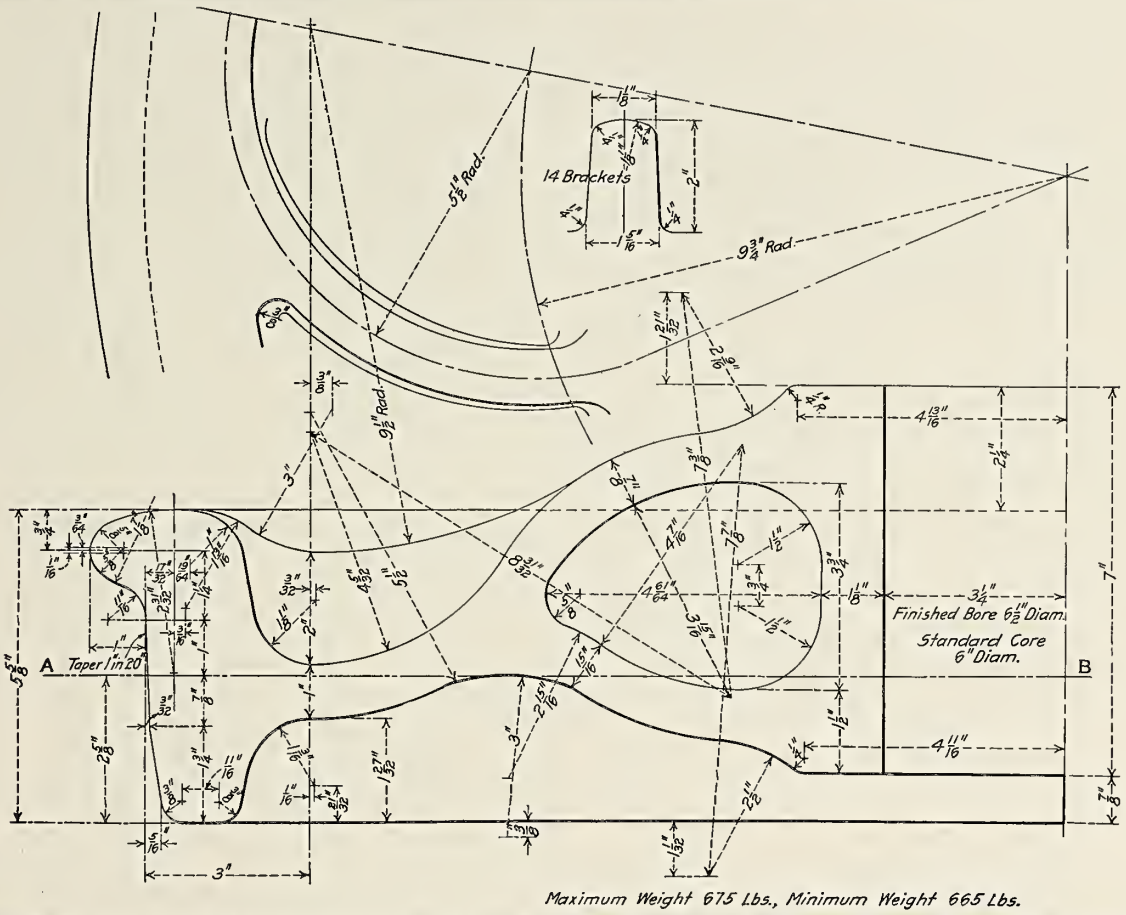

Fig. 2278—Recommended Practice for 33 in. Cast Iron Wheel Cars of Maximum Gross Weight Not to Exceed 132,000 lb. (M. M. Sheet F.)

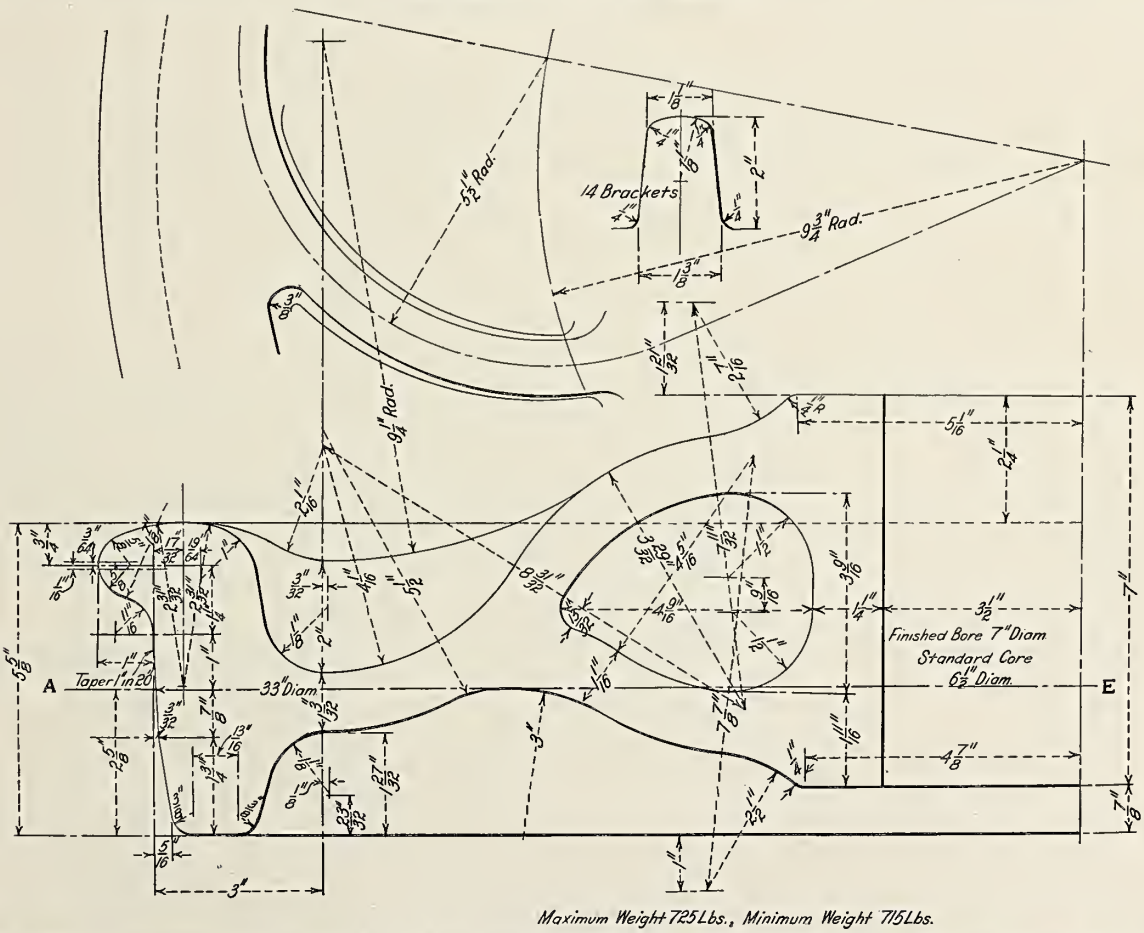

Fig. 2279—Recommended Practice for 33 in. Cast Iron Wheel for Cars of Maximum Gross Weight Not to Exceed 161,000 lb. (M. M. Sheet G.)

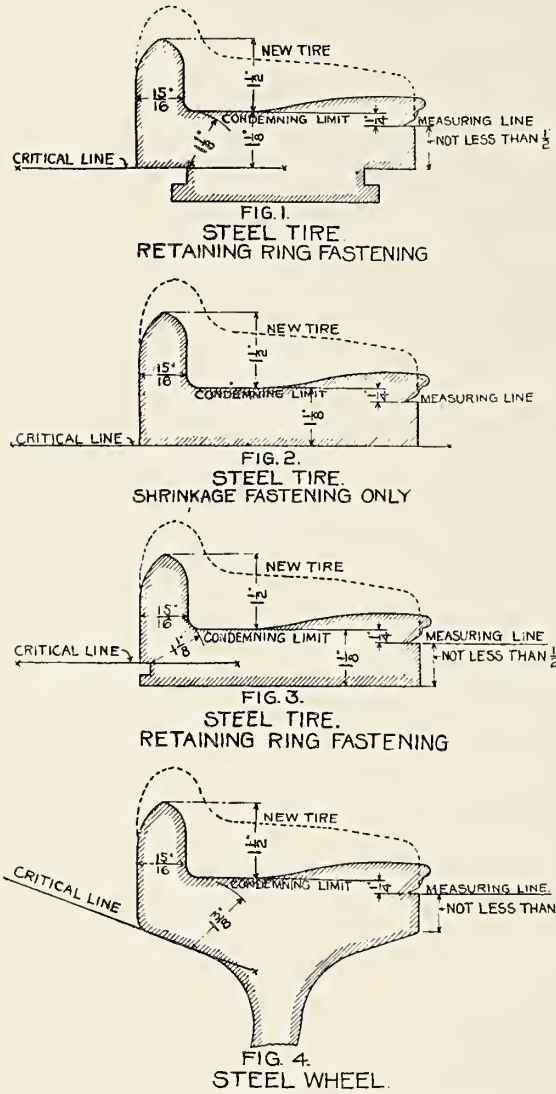

Minimum Thickness for Steel Tires.

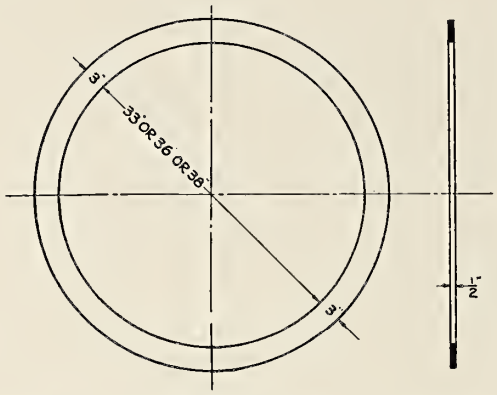

Rotundity Gage for 33, 36 or 38 in. Steel Wheels

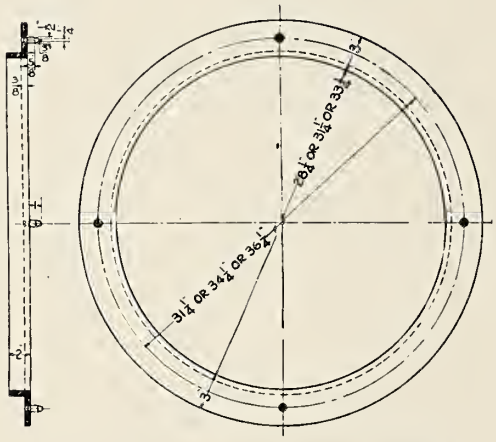

Plane Gage for Solid Steel Wheels.

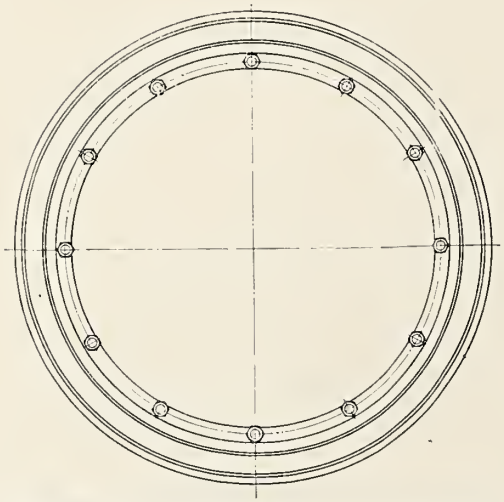

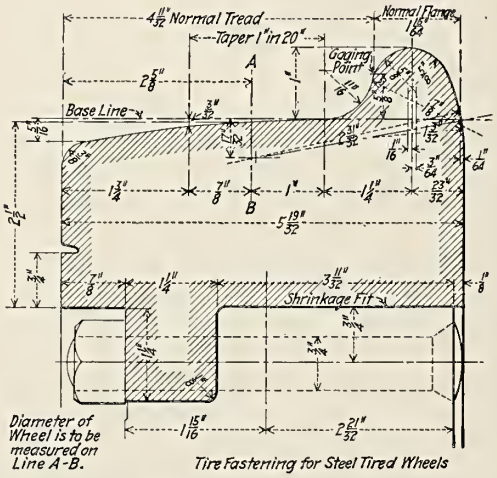

Fig. 2280—Recommended Practice for Minimum Thickness of Steel Tires, Wheel Tread and Flange for Steel Wheels, Rotundity and Plane Gages and Tire Fastening for Steel Tired Wheels. (M. M. Sheet B.)

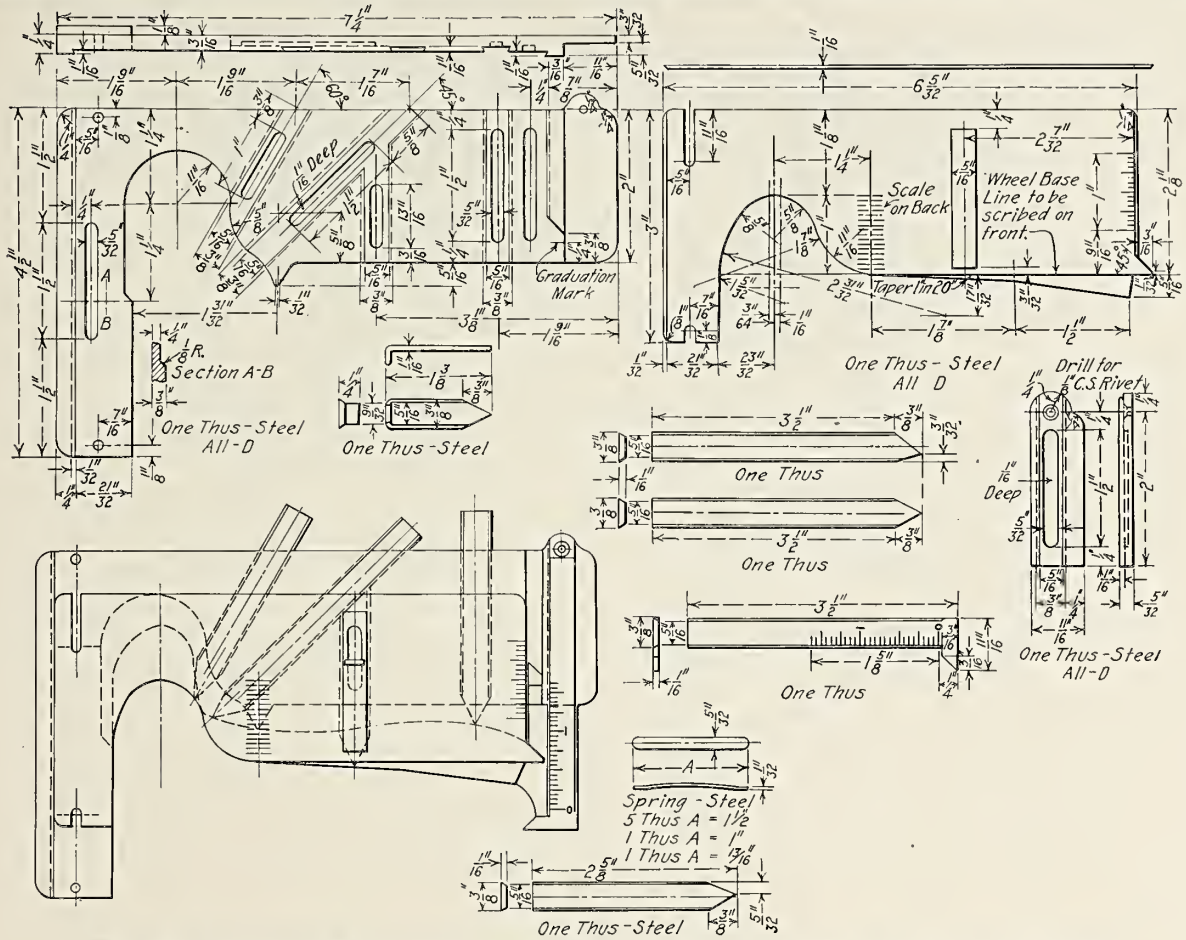

Fig. 2281—Recommended Practice for Gage for Measuring Steel Wheels to Restore Contour. (M. M. Sheet C.)

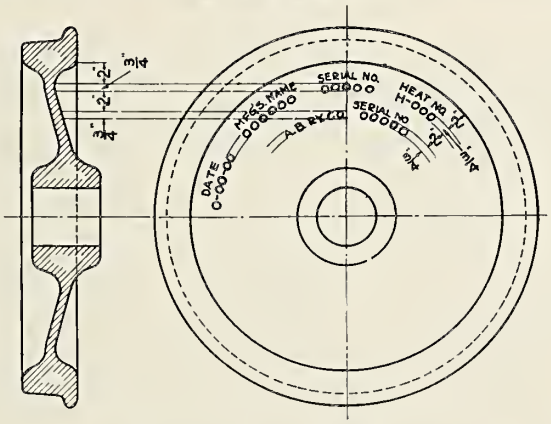

Branding of Solid Steel Wheels.

Fig. 2282—Recommended Practice for Branding Solid Steel Wheels and Details of Letters and Figures. (M. M. Sheet D.)

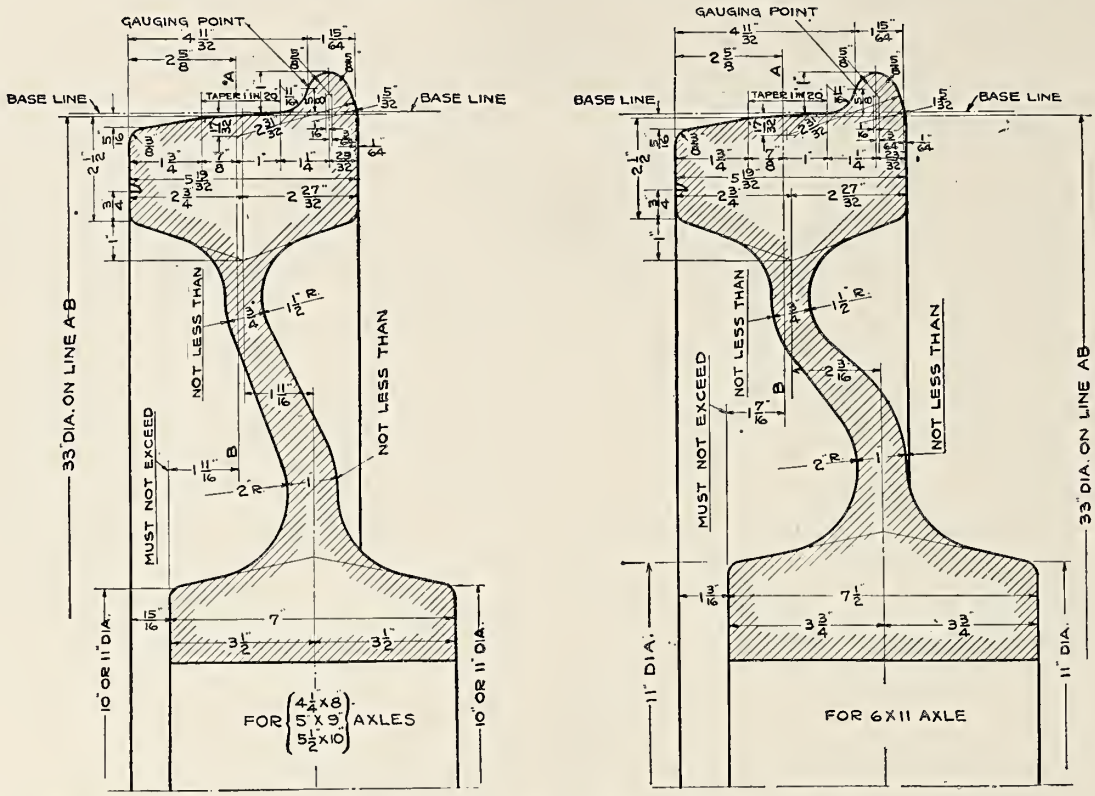

Fig. 2283—Recommended Practice for 33 in. Solid Steel Wheels for Tender Truck Service. (M. M. Sheet H.)

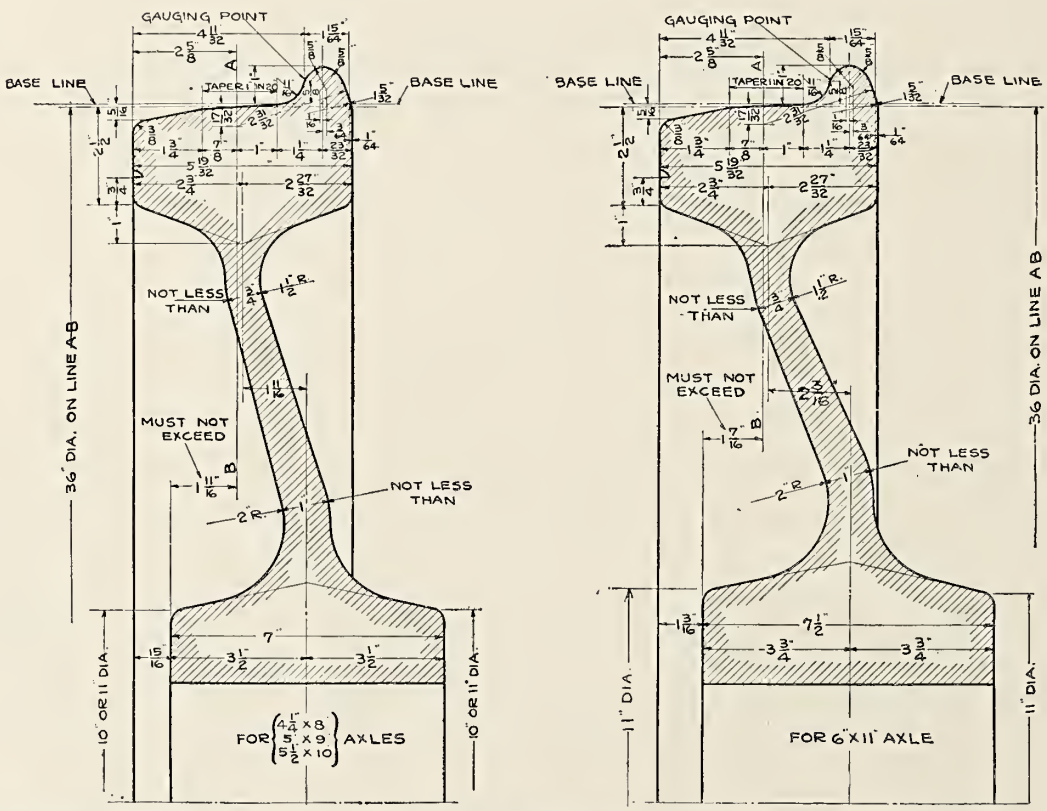

Fig. 2284—Recommended Practice for 36 in. Solid Steel Wheels for Tender Truck Service. (M. M. Sheet I)

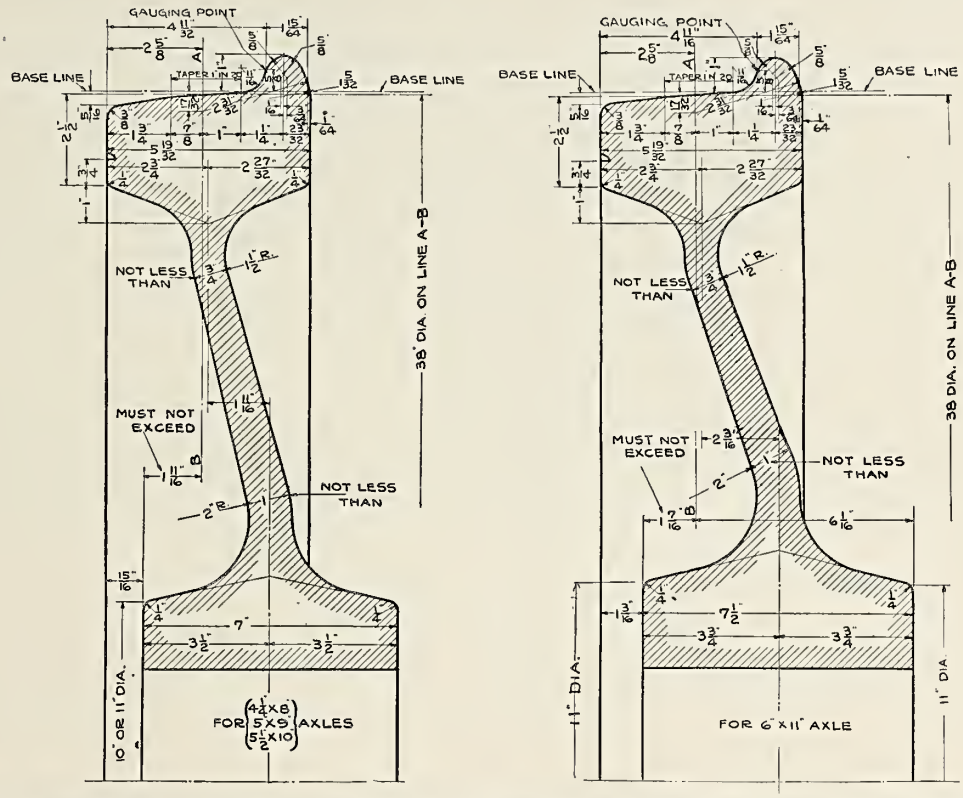

Fig. 2285—Recommended Practice for 38 in. Solid Steel Wheels for Tender Truck Service. (M. M. Sheet J.)

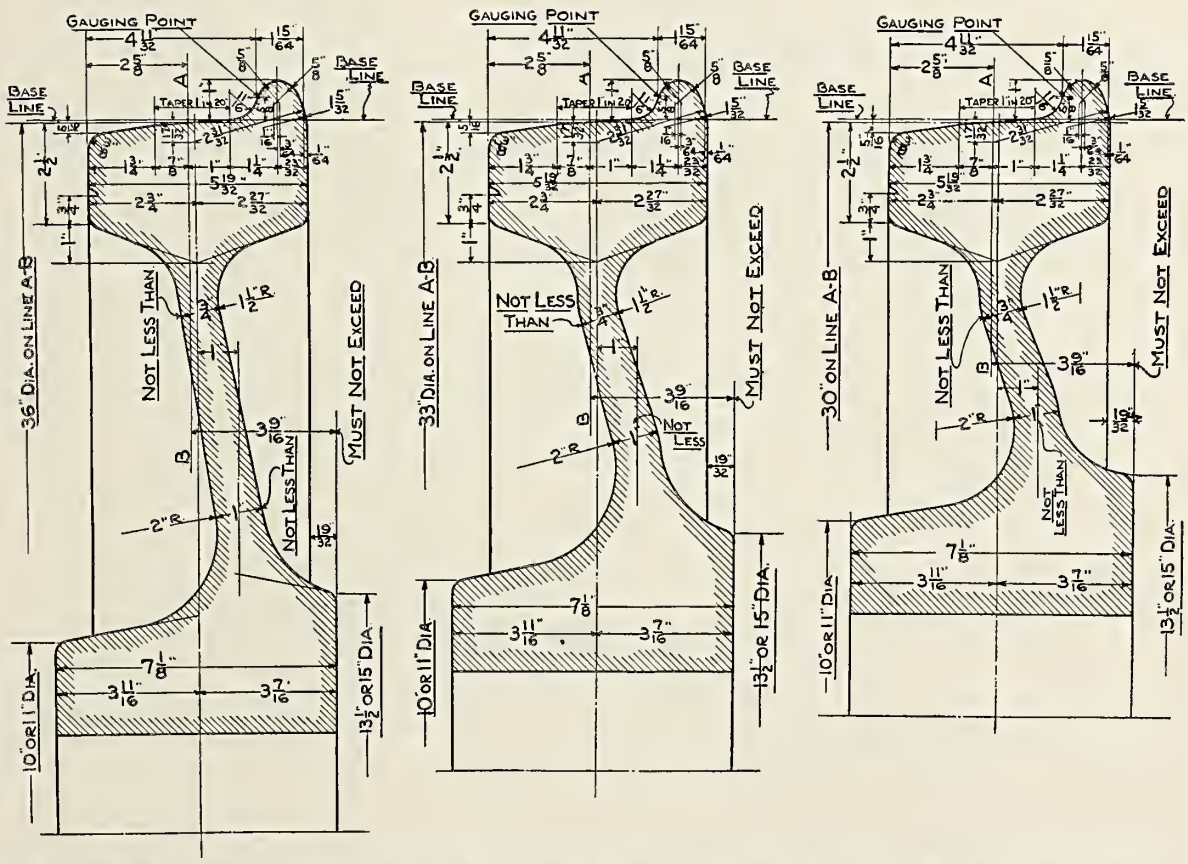

Fig. 2286—Recommended Practice for 30, 33 and 36 in. Solid Steel Wheels for Engine Truck Service. (M. M. Sheet K.)

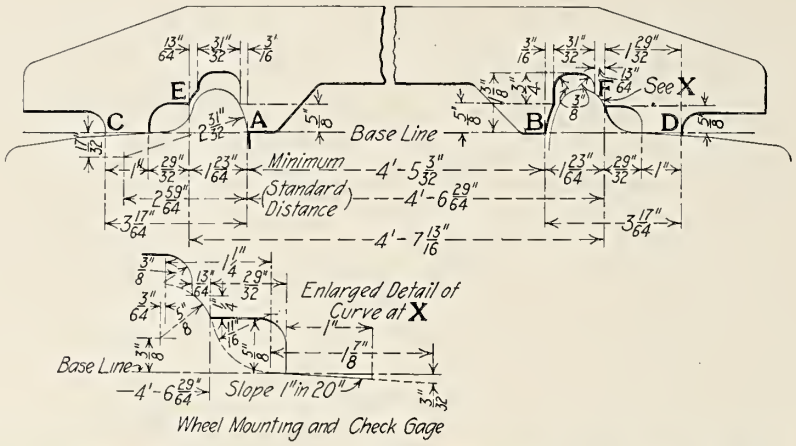

Fig. 2287—Recommended Practice for Wheel Mounting and Check Gage. (M. M. Sheet A.)

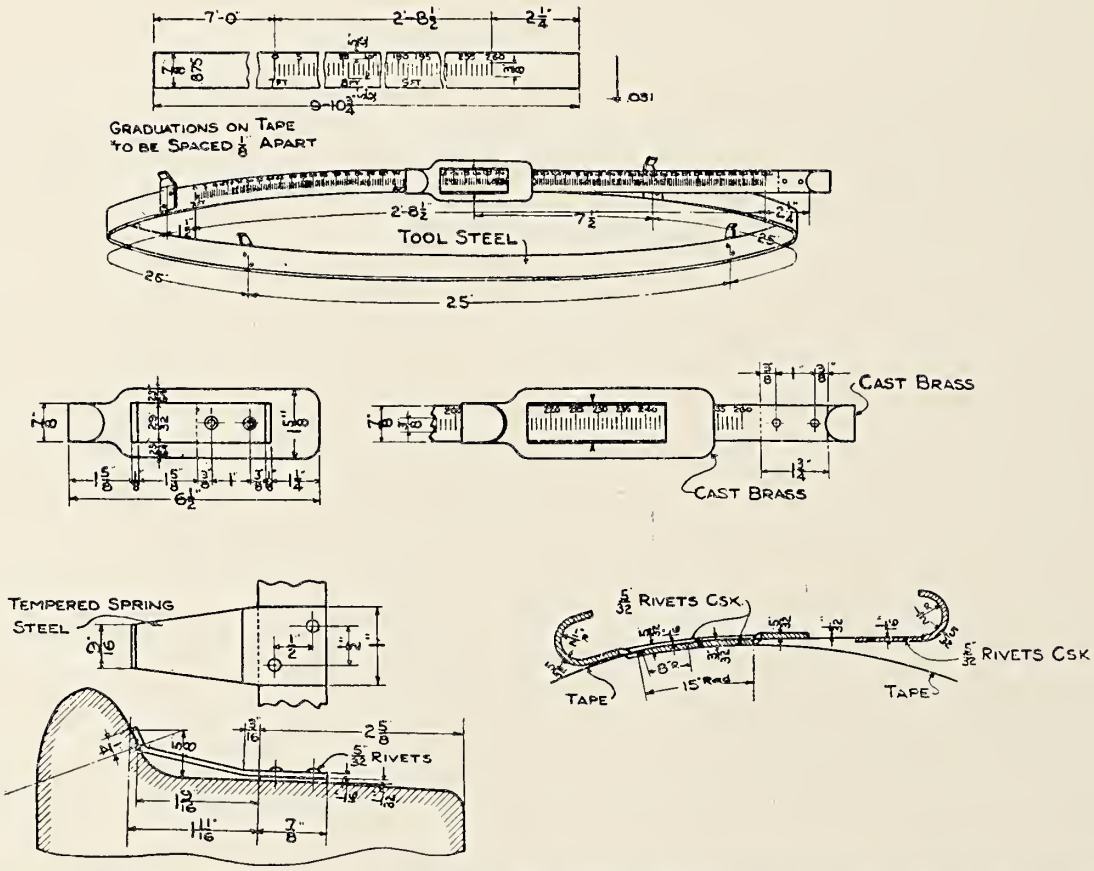

Fig. 2288—Recommended Practice for Wheel Circumference Measure for Steel and Steel Tired Wheels. (M. M. Sheet B.)

New York, New Haven & Hartford Standard Tools and Supplies for Switch Engines.

Tools in Seat Boxes, Locked.

1 15 in. Monkey Wrench
1 Double End Set Screw Wrench, Rods. See Fig. 2289
1 Double End Set Screw Wrench, Eccentrics. See Fig. 2291
1 Oil or Grease Cup Wrench. See Fig. 2290
1 Hard Hammer, Wedge Pein, 1½ lbs. See Fig. 2292
1 Flat Chisel. See Fig. 2293
1 Set Lubricator Glasses and Washers
1 Set Valve Stem Clamps. See Fig. 2294

Tools in Left Tank Box, Locked.

1 Water Bucket, 14 Quarts
1 One Gallon Engine Oil Can
1 One-half Gallon Signal Oil Can
1 Two-Quart Cylinder Oil Can. See Fig. 2300
1 One-half Gallon Headlight Oil Can. See Fig. 2301
1 One Quart Hand Oil Can, Long Spout with Spring Valve. See Fig. 2295
1 Coal Pick. See Fig. 2307
1 Engineer's Torch, Malleable Iron. See Fig. 2302
1 Red Lantern
1 White Lantern

Equipment Loose on Engine.

1 Broom No. 6
1 Coal Scoop No. 3. See Fig. 2306
1 Framed Copy of this Equipment List
2 Cushions. See Fig. 2309
2 Steam Gage Lamps
1 Fire Hook. See Fig. 2305
1 Push Pole. See Fig. 2304
2 Red Flags

Standard Tools and Supplies for Road Engines.

Tools in Seat Boxes, Locked.

1 15 in. Monkey Wrench
1 Double End Set Screw Wrench, Rods. See Fig. 2289
1 Double End Set Screw Wrench, Eccentrics. See Fig. 2291
1 Oil or Grease Cup Wrench. See Fig. 2290.
1 Wedge Pein Hammer, 1½ lbs. See Fig. 2292
1 Flat Chisel. See Fig. 2293
1 Set Lubricator Glasses and Washers
1 Set Valve Stem Clamps. See Fig. 2294
1 2 in. Pipe Plug

Tools in Left Tank Box, Locked.

1 Water Bucket, 14 Quarts
1 Coal Pick. See Fig. 2307
1 One Gallon Engine Oil Can
1 One-half Gallon Signal Oil Can
1 Two-Quart Cylinder Oil Can. See Fig. 2300
1 One-Gallon Headlight Oil Can. See Fig. 2301
2 One Quart Hand Oil Cans, Long Spout with Spring Valve. See Fig. 2295
2 Engineers' Torches. See Fig. 2302
1 Red Lantern
1 White Lantern
1 Hot Box Hose ½ in. Diameter, 4 ft. 6 in. Long

Tools in Back Tank Box, Sealed.

1 Pinch Bar. See Fig. 2297
2 Main Crank Pin Blocks to Use when Disconnecting Engines with Solid End Side Rods. See Fig. 2298
2 Crosshead Blocks. See Fig. 2299
1 Chisel Bar Lever. See Fig. 2296

Equipment Loose on Engine.

1 Broom No. 8
2 Coal Scoops, One Second-Hand. See Fig. 2306
1 Framed Copy of This Equipment List
2 Cushions. See Fig. 2309
2 Class Lamps, Armspear
2 Steam Gage Lamps
2 Fire Hooks. See Fig. 2305
1 Push Pole, Freight Engines. See Fig. 2304
1 Box for Flags, Etc.
6 Torpedoes
3 Fusees
1 Red Flag
2 Green Flags
2 White Flags

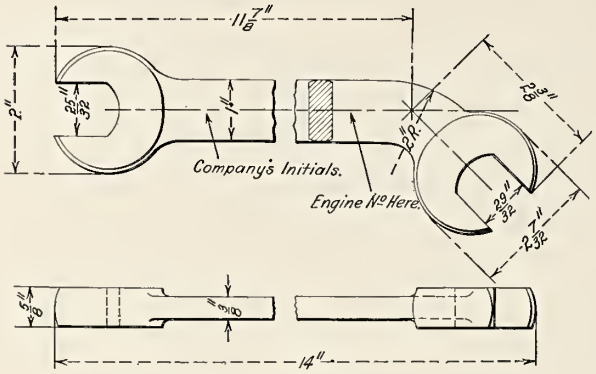

Fig. 2289—Rod Set Screw Wrench.

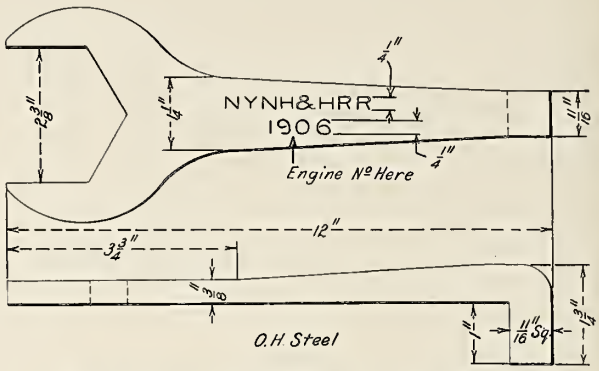

Fig. 2290—Standard Grease Cup Wrench.

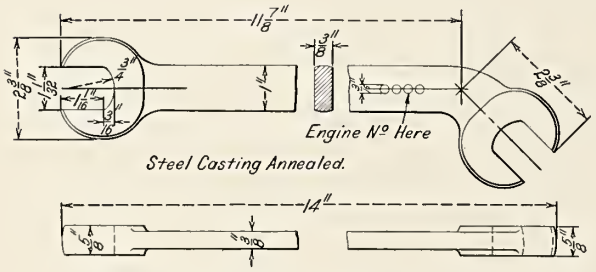

Fig. 2291—Eccentric Set Screw Wrench.

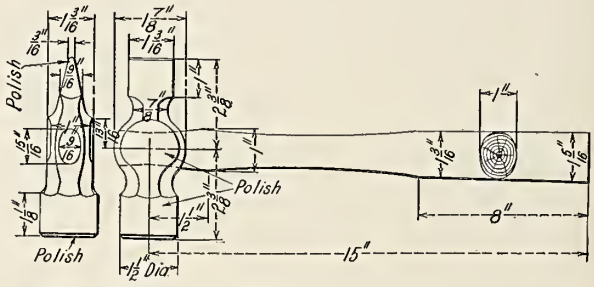

Fig. 2292—Wedge Pein Hammer, Weight 1½ lb.

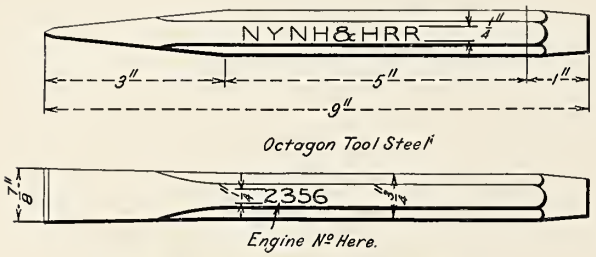

Fig. 2293—Standard Flat Chisel.

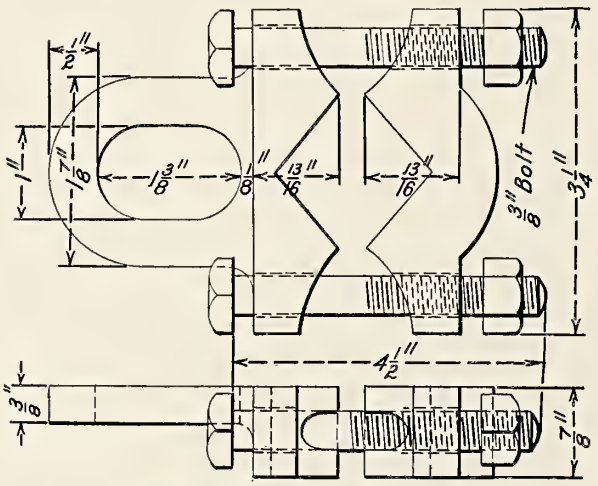

Fig. 2294—Valve Stem Clamp.

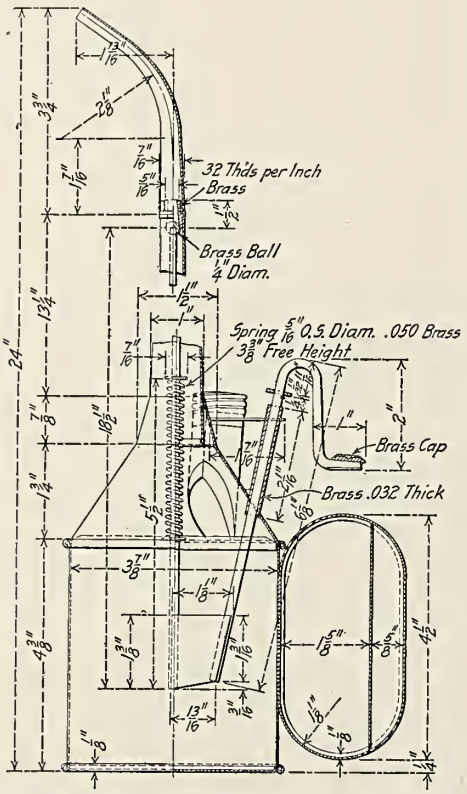

Fig. 2295—Engineer's Long Spout Oil Can.

New York, New Haven & Hartford.

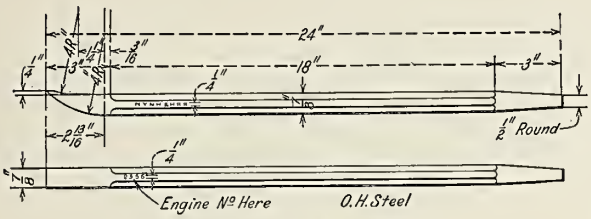

Fig. 2296—Chisel Bar Lever.

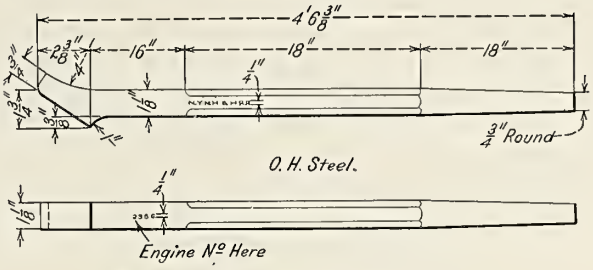

Fig. 2297—Standard Pinch Bar.

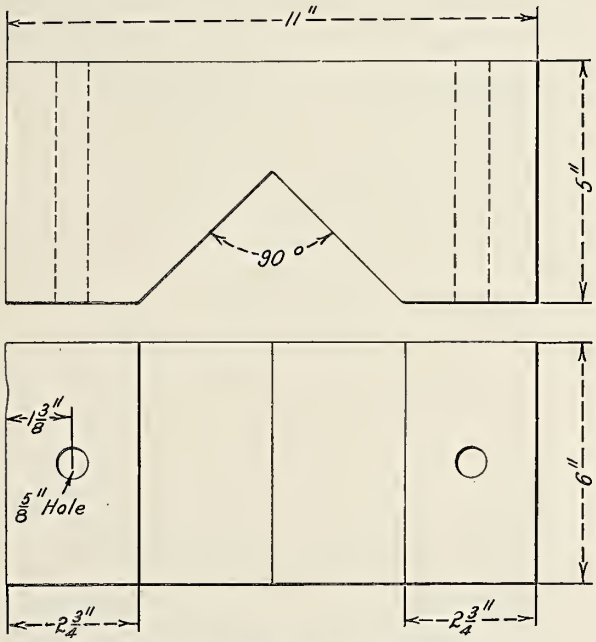

Fig. 2298—Crank Pin Block.

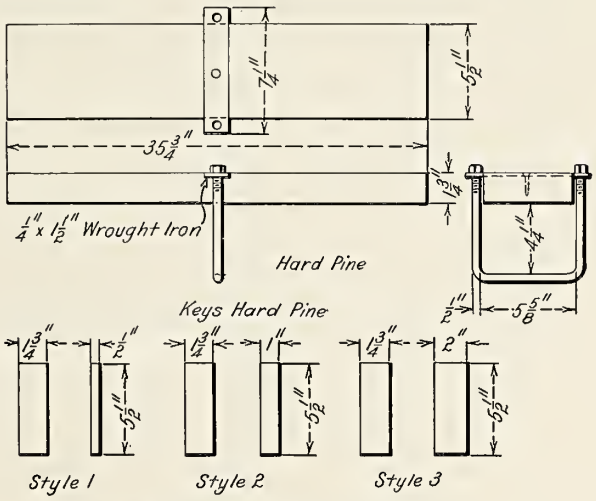

Fig. 2299—Crosshead Block.

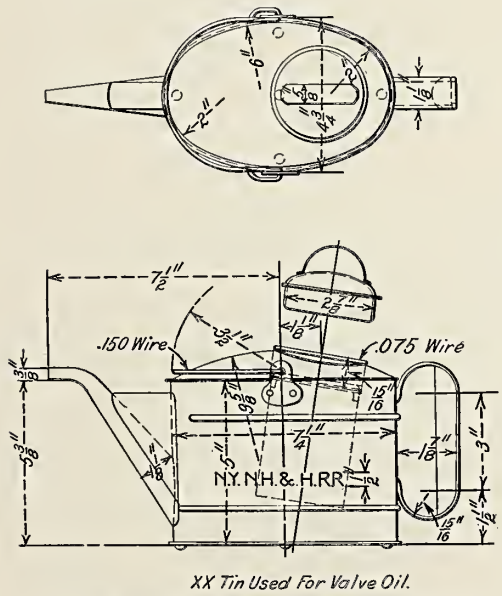

Fig. 2300—Oil Can, Capacity 2 Quarts.

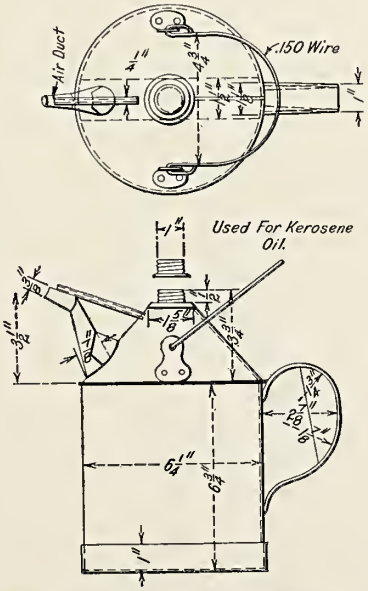

Fig. 2301—Oil Can, Capacity 1 Gallon.

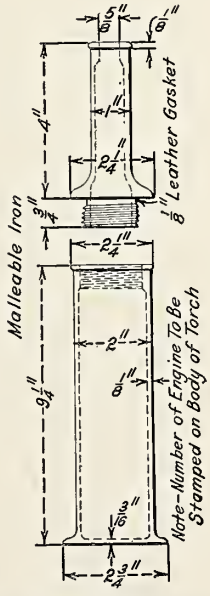

Fig. 2302—Engineer's Torch.

New York, New Haven & Hartford.

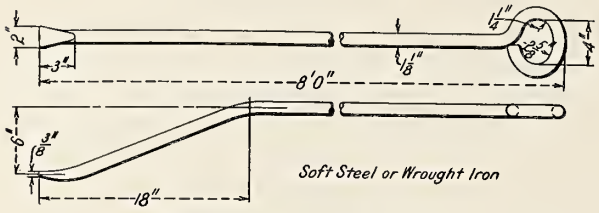

Fig. 2303—Slash Bar.

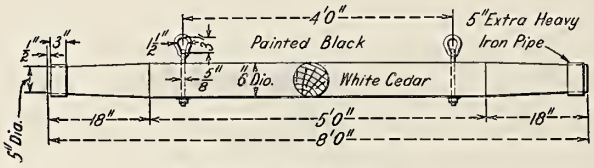

Fig. 2304—Push Pole.

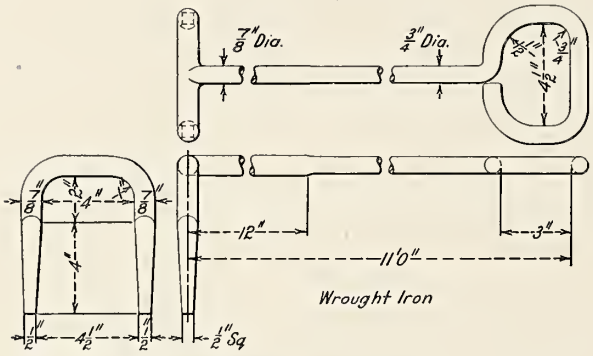

Fig. 2305—Fire Hook.

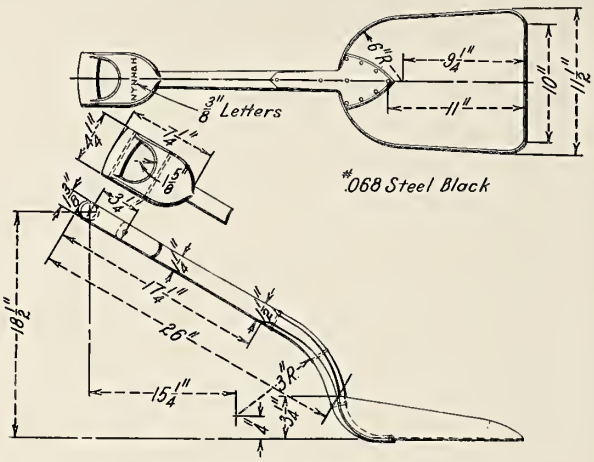

Fig. 2306—Standard No. 3 Scoop.

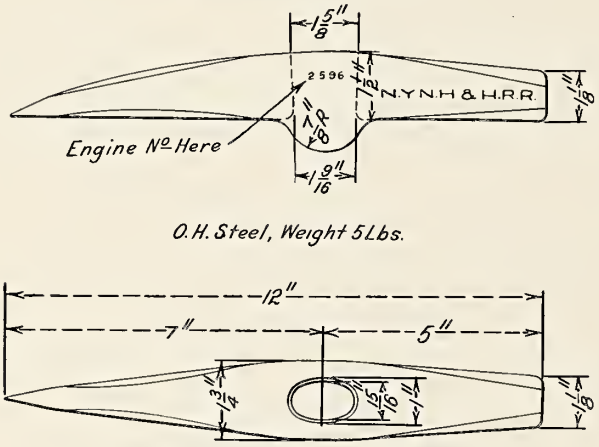

Fig. 2307—Standard Coal Pick.

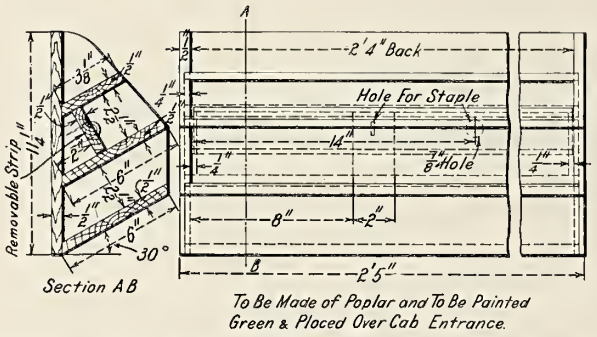

Fig. 2308—Rack for Torpedoes, Fusees and Flags.

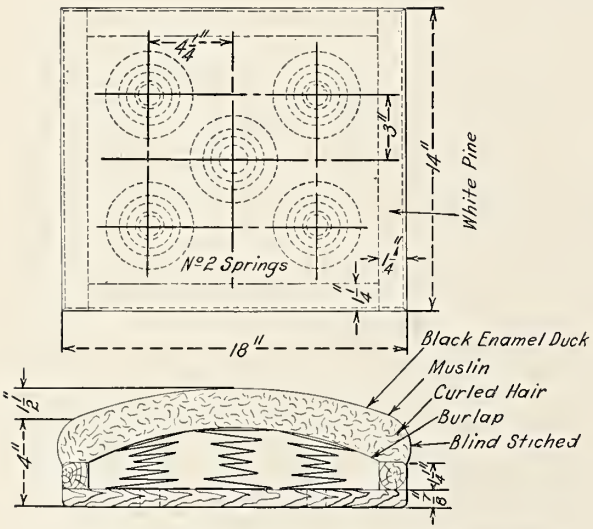

Fig. 2309—Engineer's Seat Box Cushion.

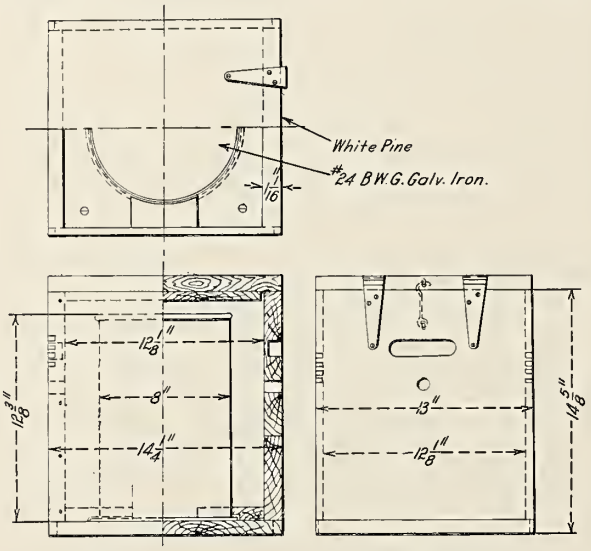

Fig. 2310—Water Cooler and Box.

New York, New Haven & Hartford.

Canadian Pacific Railway Standard Locomotive Tool Equipment.

In Engineer's Portable Tool Box.

1 2½ lb. Hammer
1 2 in. Pipe Wrench
1 18 in. Monkey Wrench
1 12 in. Monkey Wrench
2 Balls Cotton Wick
3 Small Lamp Wicks
¼ lb. Copper Wire, No. 18 I. W. G.
1 Hank of Tar Band
1 Cold Chisel
1 Square Set
2 Water Gage Glasses
4 Water Gage Glass Washers
1 Union Wrench

In Sealed Boxes on Tender.

1 Combination Wrench. See Fig. 2313
1 Valve Stem Clamp. See Fig. 2312
2 Car Replacers {Outside / Inside}
1 15-Ton Style K Norton Jack for Tender of 4,000 Gal. and Over
1 8 in. Bottle Jack for Tender Under 4,000 Gal. See Fig. 2320
1 Chain 1 in. x 18 ft. See Fig. 2314
1 Journal Wedge
1 Journal Bearing
1 Steel Wedge for Raising Engine Wheels. See Fig. 2316
1 Hardwood Block for Crosshead
1 Tommy Bar
1 Sledge. See Fig. 2321

In Boxes Under Peak of Cab.

4 White Flags 6 Green Flags

In Rack on Outside Back of Cab.

2 Air Hose
1 Signal Hose
1 Steam Heat Hose for Engines so Equipped.
1 Flagman's Kit Consisting of:
3 Red Fusees
4 Torpedoes
1 Red Flag
1 Box Matches
8 Fog Signals

Engine Supplies.

1 or 2 Water Gage Lamps, According to Requirements
1 or 2 Steam Gage Lamps, According to Requirements
1 or 2 Lubricators, According to Requirements
1 Two-Gallon Oil Can for Engine Oil
1 One-Gallon Oil Can for Kerosene
1 Two-Quart Valve Oil Pail
1 Three-Pint Pot for Filling Lubricator
1 Galvanized Iron Pail for Grease. See 2317
1 1½-Gallon Galvanized Pail and Cover for Dope
1 Two-Quart Oil Can for Signal Oil
1 Galvanized Iron Fire Pail
1 Spring Oiler. See Fig. 2319
1 Broom
3 Cab Seats {Engineer / Fireman / Brakeman}
1 Coal Pick
1 Poker, length {10 ft. / 9 ft.} as required
1 Hoe, length {8 ft. / 7 ft. / 6 ft.} as required. See Fig. 2323
1 Coal Scoop
1 Pinch Bar
1 Shaker Bar
2 Torches. See Fig. 2322
3 Cab Curtains
1 Key Ring with Brass Tag
2 Packing Irons {Hook / Pusher} See Fig. 2315

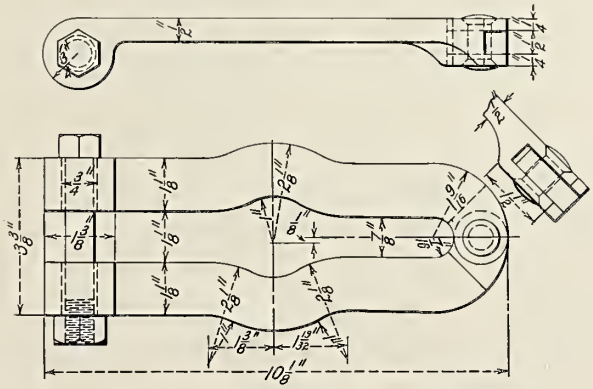

Fig. 2311—Valve Stem Clamp.

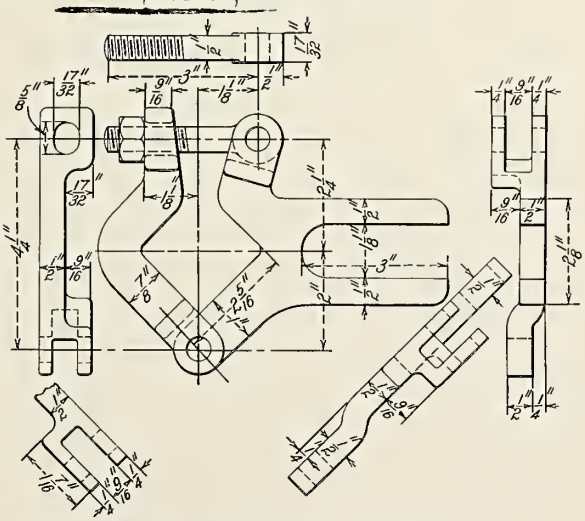

Fig. 2312—Valve Stem Clamp.

Canadian Pacific Railway.

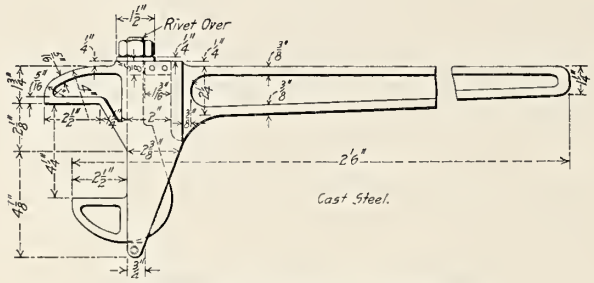

Fig. 2313—Combination Wrench.

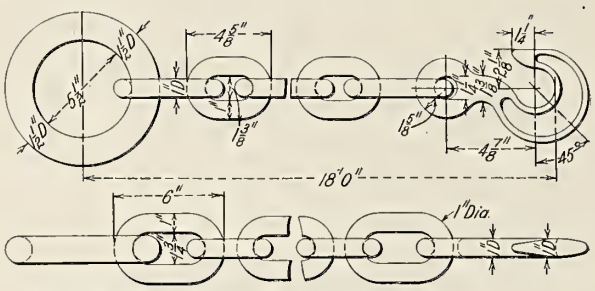

Fig. 2314—Standard Wrecking Chain.

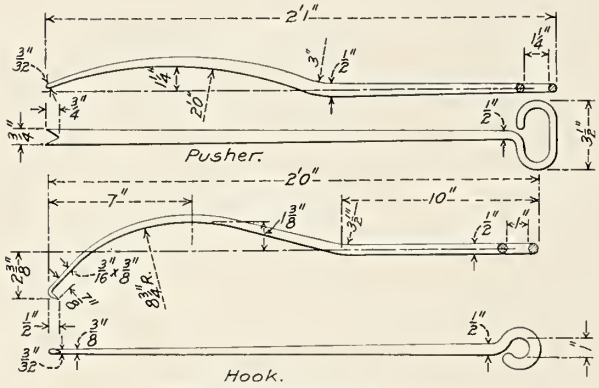

Fig. 2315—Packing Irons.

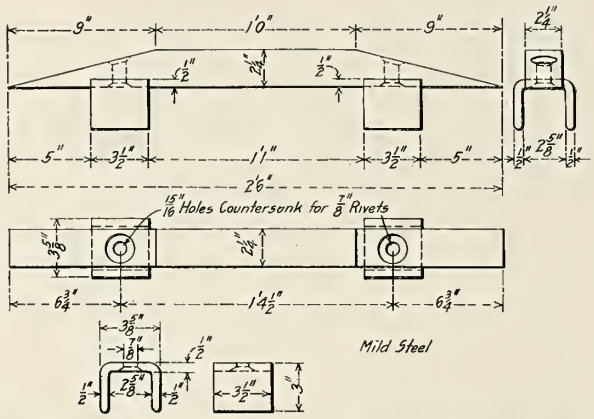

Fig. 2316—Steel Engine and Tender Wedge for Raising Wheels.

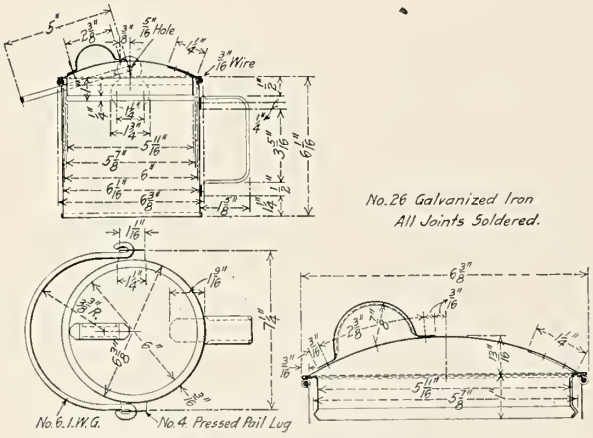

Fig. 2317—Grease Pail.

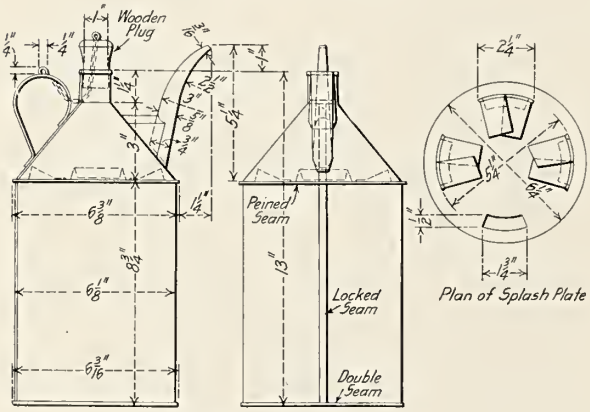

Fig. 2318—Oil Can.

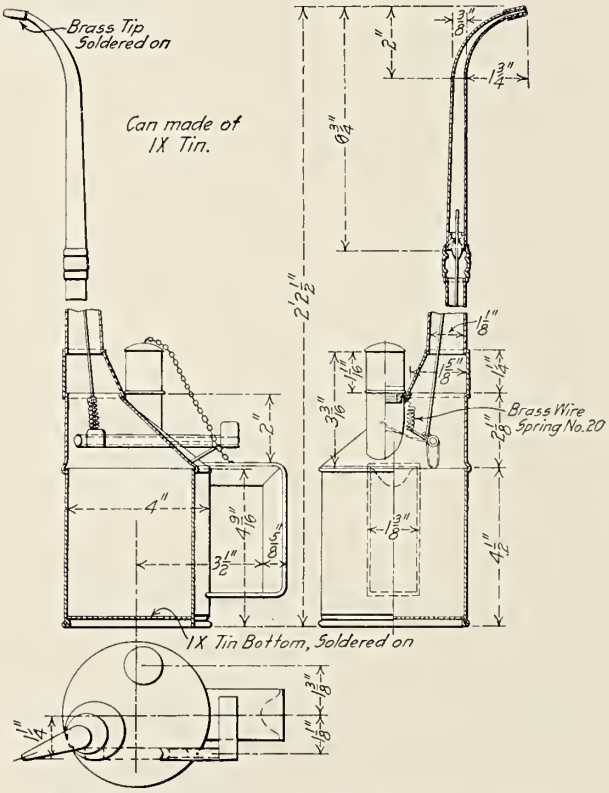

Fig. 2319—Engineer's Long Spout Oil Can.

Canadian Pacific Railway.

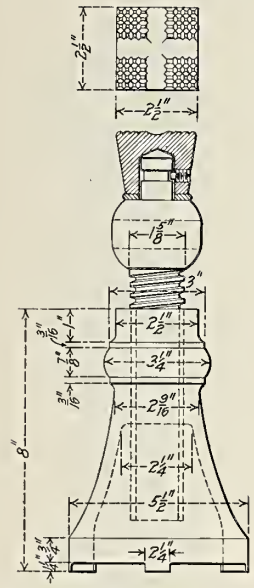

Fig. 2320—Standard 8 in. Screw Jack.

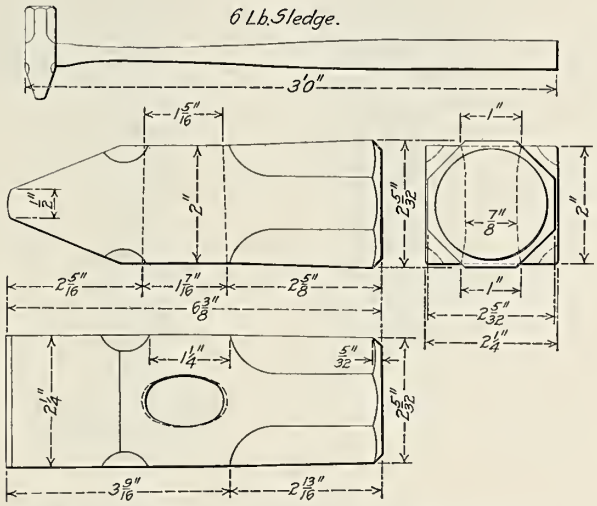

Fig. 2321—Sledge Hammer, Weight 6 lbs.

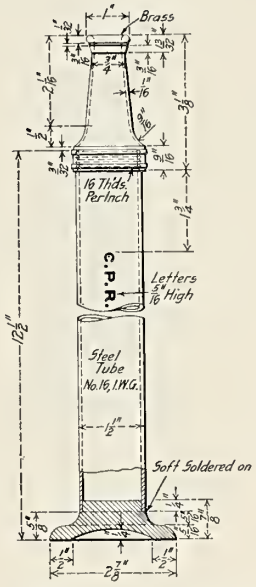

Fig. 2322 — Engineer's Torch.

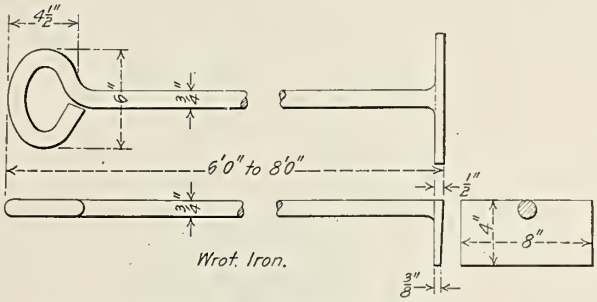

Fig. 2323—Fire Hoe.

Figs. 2320-2323 are Canadian Pacific Railway Equipment.

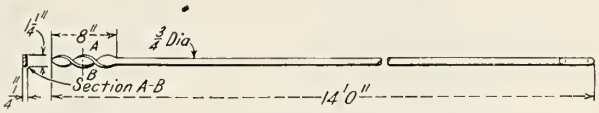

Fig. 2324—Flue Auger; Central of New Jersey.

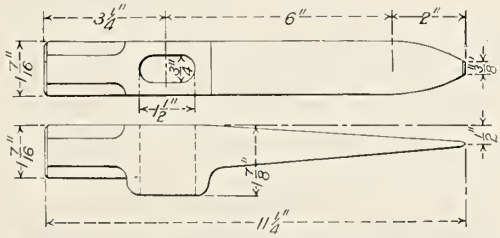

Fig. 2325—Locomotive Coal Pick; Hubbard & Company.

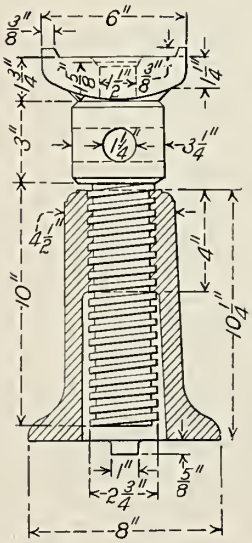

Fig. 2326—Standard Jack Screw; Baldwin Locomotive Works.

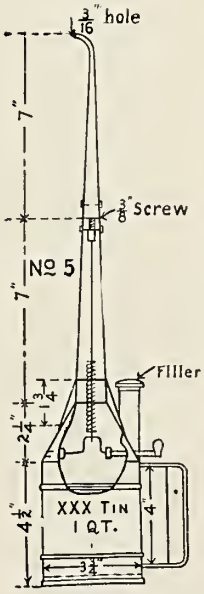

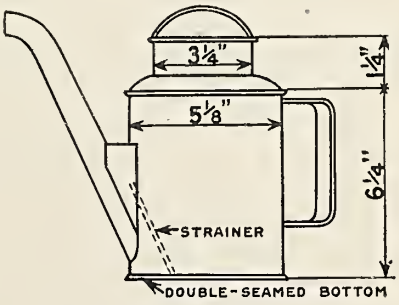

Fig. 2327—Engineer's Long Spout Oiler and Tallow Pot; Johnson Manufacturing Company.

Chicago, Burlington & Quincy Locomotive Tools and Supplies.

Freight Engines.

2 Rerailers
1 Transom Chain
1 Pinch Bar
1 Drawbar Emergency Knuckle
1 Drawbar Knuckle Pin
1 12 in. Jack and 30 in. Lever
2 Crank Pin Safety Collars
2 Spring Blocks
1 Crosshead Block
1 Air Hose 1¼ in.
1 Pipe Plug 2½ in.
6 Flue Plugs
1 Flue Plugging Bar
1 Large Monkey Wrench 21 in.
1 Double End Rod Wrench
1 Socket Wrench
1 Front End Tool Box
1 Steam Gage Lamp
1 Water Glass Lamp
2 Front End Signal Lamps
1 Clinker Hook
1 Ash Hoe
1 Front End Poker
1 Grate Shaker Bar
1 Scoop
1 Coal Pick
1 Broom
1 Bell Rope
1 Tank Pail
2 Headlight Chimneys
1 Red Lantern Globe
1 White Lantern Globe
6 Torpedoes
6 No. 1 Burners and 6 No. 1 Wicks
2 White, 2 Green and 1 Red Flag
5 Flag Casings
4 Water Glasses
24 Water Glass Gaskets
4 Lubricator Glasses
12 Lubricator Glass Gaskets

Passenger Engines.

Same as above and following in addition thereto.

1 Signal Air Hose
1 Emergency Headlight
1 Engine Truck Brass
1 Tank Truck Brass

Switch Engines.

2 Rerailers
1 Transom Chain
1 Ash Hoe
1 Clinker Hook
1 Scoop
1 Coal Pick
1 Broom
1 Grate Shaker Bar
Tank Pail
1 Front End Poker
2 Water Glasses
12 Water Glass Gaskets
2 Lubricator Glasses
12 Lubricator Glass Gaskets
2 Headlight Chimneys

Small tools carried in individual tool box furnished each engineer.

1 Hard Hammer
1 Alligator Wrench 15 in.
1 Eccentric Set Screw Wrench
1 Monkey Wrench 15 in.
1 Flat Chisel
1 Spanner Wrench
1 Monkey Wrench 12 in.
1 Cape Chisel
1 Packing Iron
1 Packing Hook

Great Northern Standard Tool List for Locomotives.

Large Tool Box.

1 Pinch Bar
1 Switch Chain
2 Iron Face Wedges
2 Wrecking Frogs
8 Flue Plugs
1 Air Hose
1 Signal Hose, Passenger Engine Only
1 Pony Jack

Small Tool Box.

1 16 in. Monkey Wrench
1 12 in. Combination Wrench
1 Flat Chisel
1 Cape Chisel
1 Hard Hammer
1 Soft Hammer
2 Set Screw Wrenches
1 Spanner Wrench, Air Pump
1 Small Screw Driver
1 Packing Hook
1 Socket Wrench, Rod Cups

Fire Tools.

1 Coal Pick
1 Coal Scoop
1 Ash Hoe, for Engines with Solid Bottom Pans
1 Clinker Bar, for Engines with Dump Grate
1 Fire Rake
1 Plugging Bar

Oil and Lantern Box.

6 10 in. Fusees, Red
6 10 in. Fusees, Yellow
1 White Lantern
2 Red Lanterns
2 Arm Rests
2 Classification Lamps
1 Lubricator Glass Guard
1 Water Glass Guard
1 Tube for Cup Grease
1 Torpedo Box
8 Torpedoes
4 Green Markers
2 White Markers
2 Cab Lamps

Oilers in Cab.

2 Engine Oilers
1 Tallow Can

Extras.

2 Red Flags
1 Broom
1 Water Pail
1 Push Pole for Switch Engine

Fig. 2328—Duff-Bethlehem Forged Steel Hydraulic Jack; Duff Manufacturing Company.

Fig. 2329 — High Speed Ball Bearing Screw Jack; Duff Manufacturing Company.

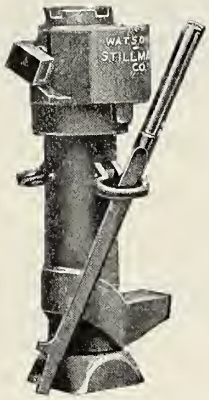

Fig. 2330—Claw Hydraulic Jack; Watson-Stillman Company.

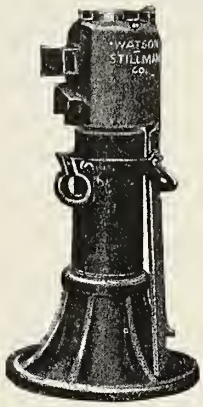

Fig. 2331—Broad Base Hydraulic Jack; Watson-Stillman Company.

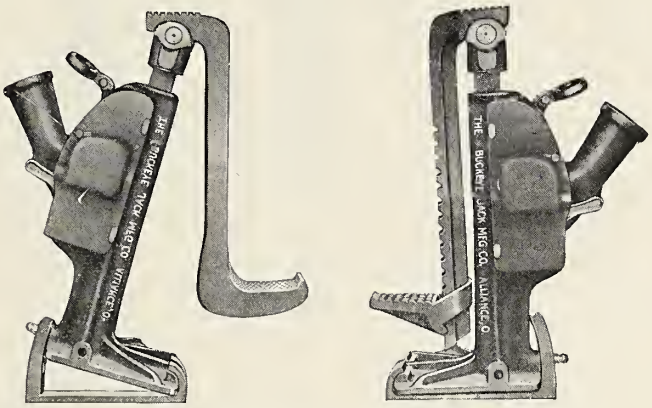

Fig. 2332—Jacks with Adjustable Heel Plates; Buckeye Jack Manufacturing Company.

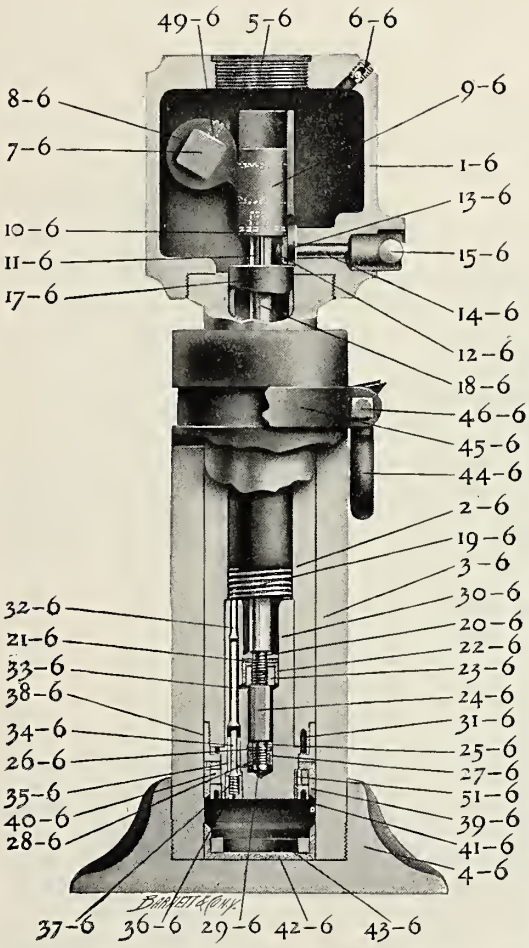

Fig. 2333—Universal Hydraulic Jack; Richard Dudgeon.

Names of Parts of Fig. 2333.

1-6	*Head*	27-6	*Small Cup Packing*
2-6	*Ram*	28-6	*Small Piston Packing Ring*
3-6	*Cylinder*	29-6	*Jam Screw*
4-6	*Low Base*	30-6	*Pump*
5-6	*Head Plate*	31-6	*Pump Pin*
6-6	*Air Valve*	32-6	*Upper Valve*
7-6	*Socket*	33-6	*Middle Valve*
8-6	*Arm*	34-6	*Lower Valve*
9-6	*Piston Head*	35-6	*Valve Case*
10-6	*Piston Retaining Pin*	36-6	*Valve Bonnet*
11-6	*Lowering Pin*	37-6	*Valve Spring*
12-6	*Cam Shaft Nut*	38-6	*Pump Retaining Ring*
13-6	*Cam*	39-6	*Ram Packing*
14-6	*Cam Shaft*	40-6	*Ram Packing Ring, Upper*
15-6	*Valve Handle*	41-6	*Ram Packing Ring, Lower*
16-6	*Valve Handle Pin*	42-6	*Bottom Packing*
17-6	*Push Tube*	43-6	*Bottom Packing Ring*
18-6	*Piston*	44-6	*Handles*
19-6	*Push Tube Spring*	45-6	*Straps*
20-6	*Large Piston Collar*	46-6	*Handle Bolts*
21-6	*Large Hard Packing*	47-6	*Lever*
22-6	*Large Cup Packing*	48-6	*Base Screw*
23-6	*Large Piston Packing Ring*	49-6	*Arm Screw*
24-6	*Piston Extension*	50-6	*Socket Packing*
25-6	*Small Piston Collar*	51-6	*Packing Ring Pin*
26-6	*Small Hard Packing*	52-6	*Cam Pin*

Fig. 2334—Coal Picks; The National Malleable Castings Company.

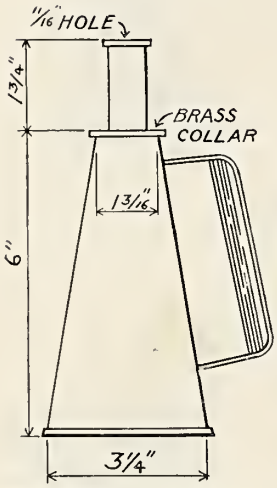

Fig. 2335 — Engineer's Torch; Johnson Manufacturing Company.

Fig. 2336—Engineer's Torch; Dayton Malleable Iron Company.

Fig. 2337—Engineer's Torch; Dayton Malleable Iron Company.

Fig. 2338 — Shop Torch; Peter Gray & Sons.

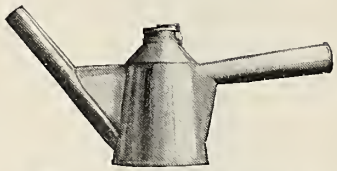

Fig. 2339 — Engineer's Torch; Peter Gray & Sons.

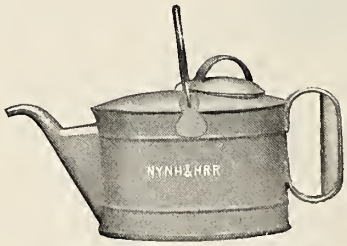

Fig. 2340—Oval Valve Oil Can; Peter Gray & Sons.

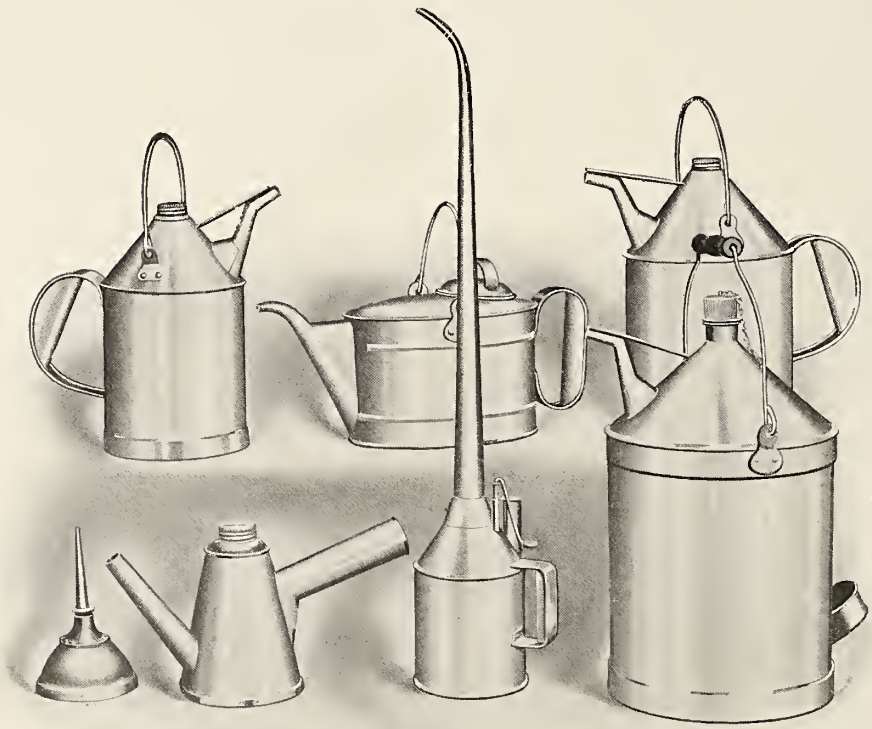

Fig. 2341—Locomotive Oil Can and Torch Equipment; Peter Gray & Sons.

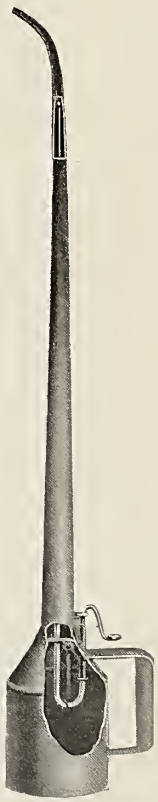

Fig. 2342 — Engineer's Long Spout Oil Can; Peter Gray & Sons.

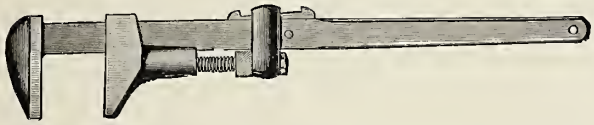

Fig. 2343—Coes' Steel Handle Railroad Monkey Wrench; Coes Wrench Company.

Fig. 2344—Railroad Wrench, Key Model; Coes Wrench Company.

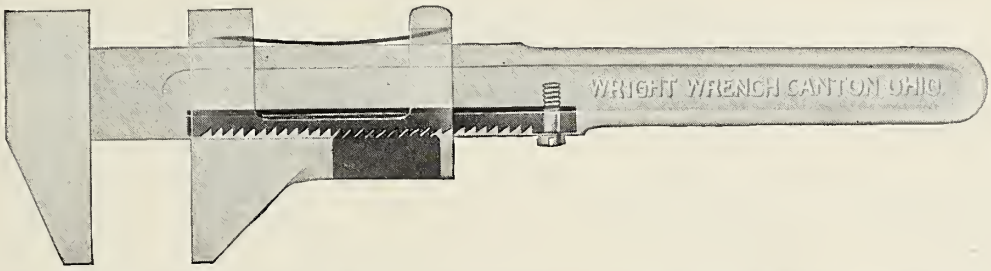

Fig. 2345—Quick Adjustable Monkey Wrench; American Forge & Machine Company.

Fig. 2346—Locomotive Scoop; Hubbard & Company.

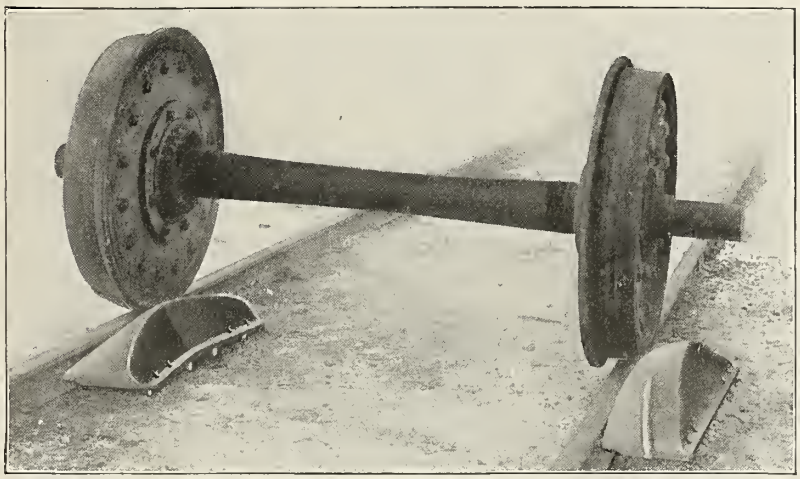

Fig. 2347—Application of Fewing's Wrecking Frogs; Railway Appliances Company.

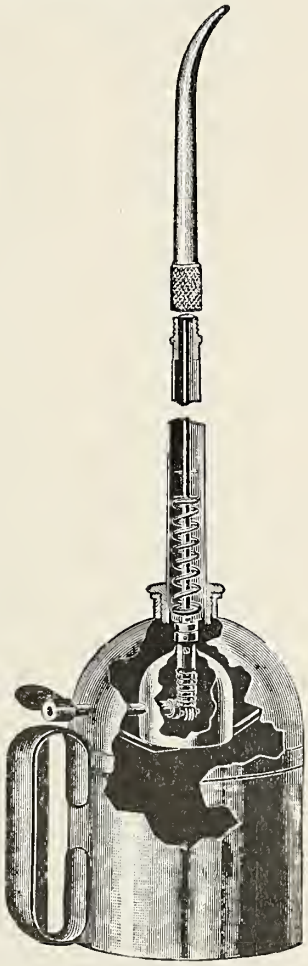

Fig. 2348—Engineer's Oil Can.

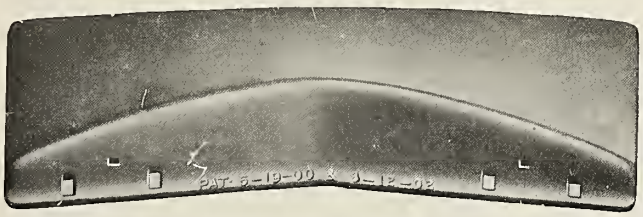

Fig. 2349—Fewing's Inside Wrecking Frog; Railway Appliances Company.

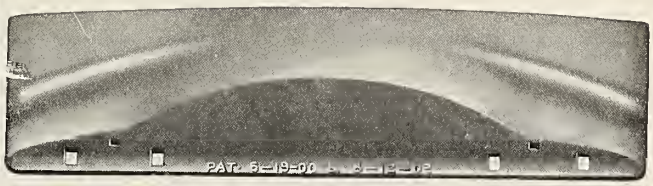

Fig. 2350—Fewing's Outside Wrecking Frog; Railway Appliances Company.

A Study by L. R. Pomeroy, of the Machine Tool Operations Required, Working 8 Hours a Day, for Making 4 New Consolidation Locomotives, 8 Light Repairs and 30 General Repairs Per Month, at the Scranton Shops of the Delaware, Lackawanna & Western Railroad.

MACHINE SHOP.

Class of Work	Machine Tool	Operation	Number of Pieces per Month: New Engs	Repairs	Total	Average Time per Piece	Total Days Work per Month	
Driving Wheels and Tires	1 80" Driving Wheel Lathe	Turning Tires		4x8 [1] and 30x4 [2]	152 [3]	1½ hrs. [4]	28⅔	1 mach.
	1 Driving Wheel Lathe	Trueing Journals		152x50%	76 [3]	2½ hrs. [4]	24	1 mach.
	1 7' Vertical Boring Mill	Boring Tires	4x8=32	30x8x15%=36	68	40 min.	5⅔	1 mach. [6]
		Smoke Arch Rings	4x1=4	30x1x10%= 3	7	2½ hrs.	2¼	
	1 400 Ton Wheel Press							1 mach.
	1 Quartering Machine	Quartering Wheels	4x4=16	30x4x10%=12	28	3 hrs.	10½	1 mach.
	2 Ver. Boring Mills, 6 and 7 ft.	Wheel Centers	4x8=32	30x8x10%=24	56	8 hrs.	56	2 mach. [7]
Frames	1 Planer, 36"x15' 4 Heads.	Front Rails	4x4=16	30x4x10%=12	28	¾ hrs.	14	1 mach.
	1 Frame Planer, 72"x32'	Main Frames (2 Per Setting)	4x2= 8	30x2x10%= 6	14	8 hrs. [5]	14	1 mach.
	1 Three-Head Frame Slotter	Slot (4 Per Setting)	4x2= 8	30x2x10%= 6	14	15 hrs. [5]	26¼	1 mach.
	1 Frame Drill, 4 Head	Drill and Ream	4x2= 8	30x2x10%= 6	14	15 hrs. [5]	26¼	1 mach.
Axles	1 Lathe, 32"x14'	Driving Axles	4x4=16	30x4x50%=60	76	3 hrs.	29⅓	1 mach.
	1 Double Keyway Cutter	Cutting Keyways	4x4=16	30x4x50%=60	76	1 hr.	9½	1 mach.
	1 Lathe, 26"x14'	Engine Truck Axles	4x1= 4	30x1x50%=15	19	2½ hrs.	5¼	1 mach.
	1 D. H. Axle Lathe	Tender Truck Axles	4x4=16	30x4x60%=72	88	45 min.	8⅔	1 mach.
Rods	1 Slab Miller, 48"x16'	Rods	4x8=32	30x8x10%=24	56	6 hrs.	42	1 mach.
	1 Vertical Miller, 42"	Mill Hubs	4x6=24	30x6x10%=18	42	5 hrs.	26¼	1 mach.
	1 D. H. Rod Borer	Rods	4x6=24	30x6x10%=18	42	2 hrs.	10½	1 mach.
	1 Ver. Drill, 44", Comp. Table	Rods and Straps				4½ hrs.	31½	1 mach.
	1 Slotter, 10"	Valve Yokes	4x2= 8	30x2x50%=30	38	2 hrs.	9½	43¼ days 2 mach.
	1 Slotter, 12"	Main Rod Straps, Back End			17	5¾ hrs.	33¾	
		Main Rod Straps, Front End			17			
		Main Connecting Rod Straps			17			
		Main Connecting Rod Knuckle Fit			6			
		Rods to Length			24			
	1 Planer, 36"x8', 4 Head	Straps, New			41	1½ hr.	7¾	52½ days 2 mach.
	1 Planer, 30"x12'	Rods, New			56	3½ hrs.	22½	
		Rods, Old			15	1½ hr.	2¼	
		Back Cyl. Heads	4x2= 8	30x2x15%= 9	17	9 hrs.	19½	24½ days 1 mach.
	1 Lathe, 16"x8'	Knuckle Pins	4x4=16	30x4=120	136	30 min.	8	
		Knuckle Pin Bushings	4x4=16	30x4=120	136	30 min.	8	
		Wrist Pins	4x2= 8	30x2= 60	68	1 hr.	8½	
	1 Hyd. Press, 25 Ton	Bushings						1 mach.
Crank Pins	1 Lathe, 26"x10'	Crank Pins	4x8=32	30x8x10%=24	56	3½ hrs. [9]	24½	1 mach.
	1 Vertical Drill, 36"	Crank Pins	4x6=24	30x6x10%=18	42	2½ hrs.	13⅛	22 days 1 mach.
		Guide Bars	4x4=16	30x4x30%=36	52	49 min.	5¼	
		Guide Blocks	4x4=16	30x4x30%=36	52	12 min.	1¼	
		Crossheads	4x2= 8	30x2x15%= 9	17	15 min.	¾	
		New Crosshead Shoes [10]		30x2x25%=15	15	1 hr.	1⅞	
Driving Boxes	1 Planer, 42"x20'	Boxes	4x8=32	30x8x10%=24	56	3½ hr.	22⅔	2 mach.
	1 Planer, 42"x12'	Old Boxes		30x8x90%=216	216	54 min.	24	
	1 Ver. Rapid Production Lathe, 37" (Bullard)	Face New Boxes	4x8=32	30x8x10%=24	56	1½ hr.	9⅓	28 days 1 mach.
		Turn Brass for Box Fit	4x8=32	30x8x90%=216	248	20 min.	10⅓	
		Bore Ecc. Crank (Walschaert)	4x2= 8	30x2x 5%= 3	11	2 hrs.	2¾	
		Piston Valve Cyl. Heads	4x4=16	30x4x 5%= 6	22	2 hrs.	5½	
	1 Draw Shaper, Morton	Shape for Brass and Cellar Fit	4x8=32	30x8x10%=24	56	3½ hrs.	22½	1 mach.
	1 Ver. Boring Mill, 37"	Bore Brass and Face Box	4x8=32	30x8=240	272	44 min.	25	1 mach.
	1 Crank Planer, 20"x20"x 24"	Cellars	4x8=32	30x8x20%=48	80	30 min.	5	34½ days [12] 1 mach.
		Brasses	4x8=32	30x8x90%=216	248	20 min.	10⅓	
		Rod and Eccentric Keys	4x8=32	30x8x40%=96	128	25 min.	6⅔	
		Frame Keys	4x16=64	30x16x50%=240	304	20 min.	12½	
	1 Radial Drill, 3'	Boxes	4x8=32	30x8x10%=24	56	2½ hrs.	16	1 mach.
		Old Boxes		30x8x90%=216	216	30 min.	13½	
Cylinders and Heads	1 Cylinder Boring Mill	Bore Cyls	4x2= 8	30x2x10%= 6	14	8 hrs.	14	1 mach.
	1 Cylinder Planer, 72"x12'	Plane Cyls	4x2= 8	30x2x10%= 6	14	15 hrs.	26¼	1 mach.
	1 Port Miller	Mill Ports						1 mach.
	1 Radial Drill, 5'	Cylinders	4x2= 8	30x2x10%= 6	14	6½ hrs.	11⅛	1 mach.
		Wheel Centers	4x8=32	30x8x10%=24	56	40 min.	4¾	
		Front Frame Rails	4x4=16	30x4x10%=12	28	4 hrs.	14	
	1 Ver. Boring Mill, 42"	Piston Packing Rings	4x6=24	38x6=228	252	20 min.	10½	22⅔ days 1 mach.
		Front Cylinder Heads	4x2= 8	30x2x30%=18	26	68 min.	3¾	
		Back Cylinder Heads	4x2=, 8	30x2x15%= 9	17	4 hrs.	8½	
	1 Ver. Rapid Production Lathe, 37" Bullard	Piston Valve Bushing		30x4x25%=30	30	4 hrs.	15	1 mach.
		Piston Valve Packing Rings		30x8x50%=120	120	20 min.	5	
	1 Radial Drill, 3'	Front Cyl. Head	4x2= 8	30x2x30%=18	26	84 min.	4½	23¾ days 1 mach.
		Back Cyl. Head	4x2= 8	30x2x15%= 9	17	2 hrs.	4¼	
		Piston Valve Bushing		30x4x20%=30	30	4 hrs.	15	
Piston Rods	1 Lathe, 26"x12'	Piston Rods	4x2= 8	30x2x60%=36	44	4 hrs.	22	1 mach.
	1 Gap Grinder, Norton	Piston Rods	4x2= 8	30x2x60%=36 / 30x2x40%=24	68	40 min.	5⅔	1 mach. [11]
	1 Cottering Machine	Keyways						1 mach.
Guides	1 Plain Hor. Miller, 20"x8'	Guides	4x4=16	30x4x30%= 36	52	4 hrs.	26	36½ days 1 mach.
		Old Guides		30x4x70%= 84	84	1 hr.	10½	
	1 Guide Bar Grinder, 80"	Guides	4x4=16	30x4=120	136	30 min.	8½	1 mach.
	1 Shaper, 16"	Cut to Length, Cut Clearance	4x4=16	30x4x30%= 36	52	1 hr.	6½	18¼ days 1 mach.
		Old Guides, Cut Clearance		30x4x70%= 84	84	30 min.	5¼	
		Guide Blocks	4x4=16	30x4x20%= 24	40	35 min.	3	
		Frame Keys	4x8=32	30x8x10%= 24	56	30 min.	3½	
	1 Lathe, 16"x8'	Guide Blocks	4x4=16	30x4x20%= 24	40	1 hr.	5	19⅛ days 1 mach.
		Crank Pin Collars	4x8=32	30x8x50%=120	152	40 min.	12½	
		Wrist Pin Washers	4x2= 8	30x2x30%= 18	26	30 min.	1⅝	
Cross-heads	1 Planer, 30"x10'	Crossheads	4x2= 8	30x2x15%= 9	17	4 hrs.	8½	22 days 1 mach.
		Crossheads, Old		30x2x85%= 51	51	90 min.	9¾	
		Block and Gibs, Old Crossheads		30x4x20%= 24	24	72 min.	3⅔	
	1 Horizontal Boring Mill 4" Spindle, 6' Table	Bore and Ream for Piston Rod Fit	4x2= 8	30x2x15%= 9	17	2 hrs.	4½	18⅜ days 1 mach.
		Ream Old Heads		30x2x15%= 10	10	1 hr.	1¼	
		Rebore Air Pump Cyl		30x2x50%= 30	30	1 hr.	3¾	
		Bore Steam Chests	4x2= 8	30x2x30%= 18	26	1 hr.	3¼	
		Bore and Make Joints, Throttle Box	4x1= 4	30x1x20%= 6	10	3 hrs.	3¾	
		Rebore Old Throttle Box		30x1x50%= 15	15	1 hr.	1⅞	

[1] Light Repairs. [2] Heavy Repairs. [3] Pairs. [4] Per Pair. [5] Per Frame. [6] Balance of Time Available for Wheel Centers. [7] See Previous Note. [8] Available for Driving Axles. [9] Time required when main pins are rough turned. [10] Drilled for old crossheads. [11] Balance of time available for valve yokes, wrist pins, etc. [12] See shoes and wedges.

MACHINE SHOP.

Class of Work	Machine Tool	Operation	Number of Pieces per Month: New Engs.	Number of Pieces per Month: Repairs	Number of Pieces per Month: Total	Average Time per Piece	Total Days Work per Month	
Steam Chests	1 Planer, 36"x10', D. H.	Steam Chests	4x2= 8	30x2x30%= 18	26	3 hrs.	9¾	20⅛ days 1 mach.
		Steam Chest Covers and Pressure Plates	4x2= 8	30x2x30%= 18	26	2½ hrs.	8⅛	
		Steam Chests, Old		30x2x30%= 18	18	1 hr.	2¼	
		Bore Stuffing Box [6]						
	1 Radial Drill, 3'	Drill Steam Chests and Tap	4x2= 8	30x2x30%= 18	26	1 hr.	3¼	22⅞ days 1 mach.
		Steam Chest Covers	4x2= 8	30x2x30%= 18	26	2 hrs.	6½	
		Pressure Plates	4x2= 8	30x2x30%= 18	26	30 min.	1⅝	
		Piston Valve Cyl. Head	4x4=16	30x4x 7%= 8	24	1 hr.	3	
		Drill and Tap Piston Heads	4x2= 8	30x2=60	68	1 hr.	8½	
Valves	1 Planer, 30"x10', D. H.	Valves	4x2= 8	30x2x50%= 30	38	4 hrs.	19	26 days 1 mach.
		Valve Yokes	4x2= 8	30x2x50%= 30	38	30 min.	2⅜	
		False Seats		30x2x25%= 15	15	2½ hrs.	4 5/16	
	1 Plane Miller, 14"x6'	Valves	4x2= 8	30x2x50%= 30	38	2 hrs.	9½	24 days 1 mach.
		False Seats		30x2x25%= 15	15	2½ hrs.	4¾	
		Valve Strips	4x2= 8	30x2x75%= 44	52	1½ hrs.	9¾	
		Valve Yoke	4x2= 8	30x2x50%= 30	38	2 hrs.	9½	
	1 Lathe, 20"x10'	Piston Valves [8]		30x2x25%= 16	16	10 hrs. [8]	20	51½ days 2 mach.
	1 Lathe, 24"x14'	Piston Valve Stems [9]		30x2x25%= 16	16	7 hrs. [9]	14	
		Valve Rods	4x2= 8	30x2x15%= 8	16	4 hrs.	8	
Valve Gear	1 Lathe, 32"x12'	Lifting Shaft	4x1= 4	30x1x20%= 6	10	2½ hrs.	3¼	24⅛ days 1 mach.
		Old Lifting Shaft		30x2x25%= 15	15	40 min.	1¼	
		Rocker Arms	4x2= 8	30x2x15%= 9	17	4 hrs.	8½	
		Old Rocker Arms		30x2x50%= 30	30	1 hr.	3¾	
		Walschaert Link Saddles	4x4=16	30x4x 5%= 6	22	2 hrs.	5½	
		Drill, Ream, Turn Valve Rod (Wals.)	4x2= 8	30x2x 5%= 3	11	1½ hrs.	2	
	3 Lathes, 18", 18" and 16"	Pins (34 Locos)			800	45 min.	75	3 mach.
	1 Centering Machine, 14"	For Center Pins						1 mach.
	1 W. S. Turret Lathe, 3"x 36"	Rocker Box Bolts [7]						1 mach.
	1 Rapid Production Ver. Lathe, 37", Bullard	Bore and Turn Ecc. Cams	4x4=16	30x4x50%= 60	76	1½ hr.	14¼	25¾ days 1 mach.
		Bore Ecc. Straps	4x4=16	30x4x50%= 60	76	1 hr.	9½	
		Rebore Old Ecc. Straps		30x4x20%= 24	24	40 min.	2	
	1 Horizontal Boring Mill, 4" Spindle, 6' Table	Rocker Boxes	4x2= 8	30x2x10%= 6	14	2 hrs.	3½	19 days 1 mach.
		Bore for Bushing		30x2x10%= 6	6	2 hrs.	1½	
		Bushed Boxes		30x2x60%= 36	36	1½ hrs.	5⅝	
		Valve Guide Crosshead	4x2= 8	30x2x20%= 12	20	40 min.	1⅝	
		Lift Shaft Boxes	4x2= 8	30x2x30%= 18	26	45 min.	2¾	
		Trans. Bar Hangers		30x2x10%= 6	6	1 hr.	¾	
		Link Brackets (Wals.)	4x2= 8	30x2x 5%= 3	11	2½ hrs.	3⅜	
		Eccentric Cams	4x4=16	30x4x50%= 60	76	1 hr.	9½	
		Link Bracket (Wals.)	4x2= 8	30x2x 5%= 3	11	2 hrs.	2¾	
		Rocker Boxes	4x2= 8	30x2x20%= 12	20	3 hrs.	7½	35¼ days 2 mach.
	2 Planers, 30"x10'	Link Saddle (Wals.)	4x4=16	30x4x 5%= 6	22	3 hrs.	8¼	
		Links	4x2= 8	30x2x10%= 6	14	2½ hrs.	4⅜	
		Union Lever Bracket	4x2= 8	30x2x 5%= 3	11	1 hr.	1⅜	
		Transmission Bar		30x2x10%= 6	6	2 hrs.	1½	
		Comb. Levers	4x2= 8	30x2x 5%= 3	11	3 hrs.	4¼	
		Radius Bar	4x2= 8	30x2x 5%= 3	11	5 hrs.	6⅞	25¼ days 1 mach.
	1 Horizontal Milling Mach. 30"x10' (for Walschaert Valve Gear)	Eccentric Rod	4x2= 8	30x2x 5%= 3	11	6 hrs.	8¼	
		Guide Bar	4x2= 8	30x2x 5%= 3	11	2 hrs.	2¾	
		Reverse Lever	4x1= 4	30x1x20%= 6	10	1½ hrs.	1⅝	
		Reverse Lever Quadrant	4x1= 4	30x1x20%= 6	10	1 hr.	1¼	
	1 Vertical Miller, 42"	Links	4x2= 8	30x2x10%= 6	14	6 hrs.	10½	78⅞ days 2 mach.
		Combination Lever	4x2= 8	30x2x 5%= 3	11	10 hrs.	13¾	
		Radius Bar	4x2= 8	30x2x 5%= 3	11	12 hrs.	16½	
		Eccentric Rod	4x2= 8	30x2x 5%= 3	11	1 hr.	1⅜	
		Union Bar	4x2= 8	30x2x 5%= 3	11	3 hrs.	4⅛	
	1 Vertical Miller, 33"	Union Bar Bracket	4x2= 8	30x2x 5%= 3	11	2 hrs.	2¾	
		Eccentric Jaws	4x4=16	30x4x25%= 30	46	2 hrs.	11½	
		Rocker Arms	4x2= 8	30x2x15%= 9	17	3½ hrs.	7½	
		Link Blocks	4x2= 8	30x2x10%= 6	14	1 hr.	1¾	
		Link Hangers	4x2= 8	30x2x10%= 6	14	3 hrs.	5¼	
		Link Saddles	4x2= 8	30x2x10%= 6	14	1½ hrs.	2⅝	
		Rod Keys	4x4=16	30x4x40%= 48	64	9 min.	1[illegible]	
	1 Plain Miller 14"x6'	Eccentric Straps			76	20 min.	3 1/12	23½ days 1 mach.
		Union Bar			14	35 min.	1	
		Reverse Lever Latch			34	2 hrs.	8½	
		Valve Rod (Wals.)			14	1½ hrs.	2⅝	
		Cut Slot in Ecc. Crank			14	1 hr.	1¾	
		Throttle Latch			34	15 min.	1	
		Rev. Lever Latch Handle			34	12 min.	1	
		Throttle Lever Latch Handle			34	12 min.	1	
		Keyway in Lift Shaft			10	30 min.	⅝	
		Throttle Lever Quadrant	4x1= 4	30x20%=6	10	2 hrs.	2½	
	1 Slotter, 12"	Keyways in Ecc. Cams			76	20 min.	3⅛	25¼ days 1 mach.
		Keyway in Ecc. Crank			12	15 min.	⅜	
		Keyway in Lift Shaft Arm			10	15 min.	1/16	
		Ecc. Rod for Brass			11	2 min.	2¼	
		Clearance in Radius Bar			14	1½ min.	5⅝	
		Transmission Bars			6	3 min.	2¼	
		Clearance in Links			20	2 min.	5	
		Reverse Lever Quadrant	4x1= 4	30x20%=6	10	3 min.	3¾	
		Transmission Bars			20	2 min.	5	
	1 Crank Planer 20"x20"x 24"	Ecc. Straps for Blade Fit			76	25 min.	4	27 days 1 mach.
		Lifting Shaft Boxes			30	1 hr.	3¾	
		Valve Rod Guide Box (Wals.)			14	3 hrs.	6½	
		Ecc. Blades for Strap Fit and Jaw Faces			36	30 min.	2¼	
		Link Saddles		30x2x20%=12	12	1 hr.	1½	
		Radius Bar Guide Box			14	2 hrs.	3½	
		Link Block	4x2= 8	30x2x10%=6	14	20 min.	⅝	
		Link Block Plates			88	20 min.	3⅔	
		Top of Transmission Hanger			20	30 min.	1¼	

[6] See Crossheads. [7] Also rough turn all motion pins, eccentric set bolts, bushings, etc. [8] This includes two cast steel follower plates, two skeleton rings and one center piece. [9] This includes straightening, centering and all work from the rough forging.

MACHINE SHOP.

Class of Work	Machine Tool	Operation	Number of Pieces per Month: New Engs.	Number of Pieces per Month: Repairs	Number of Pieces per Month: Total	Average Time per Piece	Total Days Work per Month	
Valve Gear (*Continued*)	1 Vertical Drill, 21″ 1 Vertical Drill, 26″ 1 Radial Drill, 5′	Lift Shaft Arms			10 L.s.	1 hr.	1¼	87 days 3 mach.
		Rocker Arms			17	3 hrs.	6⅜	
		Eccentric Crank			11	2 hrs.	2¾	
		Piston Valve Cyl. Heads			30	1 hr.	3¾	
		Valve Guide Crosshead and Cap			14	1½ hr.	2⅝	
		Lifting Shaft Boxes			30	1¼ hrs.	4⅝	
		Transmission Hangers			20	30 min.	1¼	
		Link Saddles			40	15 min.	1¼	
		Links			20	1½ hr.	3⅛	
		Union Bar			11	1 hr.	1⅜	
		Crosshead Bracket			14	30 min.	⅞	
		Combination Lever			11	1½ hr.	2	
		Radius Bar			11	2 hrs.	2¾	
		Eccentric Rod			11	1½ hr.	2	
		Guide Bar (Wals.)			11	45 min.	1	
		Transmission Bar			6	2½ hrs.	1 7/16	
		Reverse Lever			10	35 min.	¾	
		Reverse Lever Quadrant			10	15 min.	5/16	
		Eccentric Jaws			30	35 min.	2¼	
		Link Blocks			14	1 hr.	1¾	
		Throttle Latch			34	3 min.	¼	
		Throttle Latch Handle			34	6 min.	7/16	
		Rev. Lever Latch Handle			34	6 min.	7/16	
		Reverse Lever Latch			34	15 min.	1	
		Throttle Lever Quadrant			10	10 min.	¼	
		Radius Bar Guide Box			11	45 min.	1	
		Link Block Plates			88	12 min.	2½	
		Link Hangers			20	1½ hrs.	3⅜	
		Reach Rod			20	40 min.	1⅝	
		Eccentric Straps			76	2 hrs.	19	
		Eccentric Cams			76	1 hr.	9½	
		Link Brackets			11	1 hr.	1⅜	
		Rocker Box			20	1 hr.	2½	
		Valve Rods		30x2x10% = 6	6	20 min.	¼	
Pistons	1 Rapid Prod. Ver. Lathe, 37″ 1 Rapid Production Vertical Lathe, 37″	Bore and Turn Piston Head	4x2 = 8	30x2 = 60	68	2 hrs.	17	1 mach.
		Air Pump Packing Rings			120	8 min.	2	28¾ days 1 mach.
		Piston Rod Glands	4x2 = 8	30x2x35% = 21	29	45 min.	2¾	
		U. S. Packing Cases			29	20 min.	1¼	
		Dome Caps	4x1 = 4	30x10% = 3	7	1½ hr.	1⅞	
		Auxiliary Domes	4x1 = 4	30x10% = 3	7	1½ hr.	1⅞	
		Hub Plates	4x8 = 32	30x8x30% = 72	104	1¼ hr	16½	
		Air Pump Piston Heads		30x2x50% = 30	30	1 hr.	3¾	
Engine and Tender Truck Work	1 Wheel Borer, 48″ 1 Wheel Lathe, Steel Tire 48″	Truck Wheels, Eng. and Ten	4x10 = 40	11x30x60% = 198	238	20 min.	10	1 mach.
		Tires			165 [3]	1 hr.	20⅝	1 mach.
	1 Planer, 48″x10′	Truck Center Casting	4x1 = 4	30x25% = 8	12	2 hrs.	1½	24 days 1 mach.
		Truck Cradle Brace	4x1 = 4	30x50% = 15	19	3 hrs.	7⅛	
		Truck Frames	4x1 = 4	30x50% = 15	19	2½ hrs.	6	
		Pedestals	4x4 = 16	30x6x50% = 90	106	30 min.	6⅝	
		Binder Cstg., Tender Truck	4x1 = 4	30x4x20% = 24	28	45 min.	2¾	
	2 Drill Press, 20″ and 26″ 2 Radial Drill, 3′ and 4′	Eng. Trucks	4x1 = 4	30x50% = 15	19	13 hrs.	31	95 days 4 mach.
		Tender Trucks	4x2 = 8	30x2x40% = 24	32	16 hrs.	64	
		Col. Cstg., Ten. Truck	4x8 = 32	30x8x25% = 60	92	1½ hr.	17⅛	
	1 Shaper, 20″	Eng. Truck Brasses	4x2 = 8	30x3x30% = 27	35	20 min.	1½	30⅓ days 1 mach.
		Hanger Brackets, Brake	4x4 = 16	30x4x20% = 24	40	1 hr.	5	
		Filling Blocks	4x2 = 8	30x2x10% = 6	14	1 hr.	1¾	
		Spring Saddles	4x6 = 24	30x6x50% = 90	114	20 min.	4¾	
	1 200-Ton Wheel Press							1 mach.
Shoes and Wedges	2 Planers, 36″x12′, 30″x12′ 1 Crank Planer, 20″x20″x 24″ [6]	Shoes and Wedges	4x16 = 64	30x16 = 480	544	35 min.	39	2 mach.
		Shoes and Plane to Line			544	15 min.	17	1 mach.
		Drill for Set Bolts						
Throttle Rigging	1 Lathe, 32″x12′ 1 Lathe, 18″x8′ 1 Radial Drill, 3′	See Crossheads for Hor. Bor. Mill						40 days 2 mach.
		Dry Pipes	4x1 = 4	30x20% = 6	10	2 hrs.	2½	
		Dry Pipe Sleeves	4x2 = 8	30x2x20% = 12	20	2 hrs.	5	
		Throttle Valves	4x1 = 4	30x50% = 15	19	3 hrs.	7⅛	
		Steam Pipe Joint Rings	4x5 = 20	30x5x35% = 50	70	1 hr.	8¾	
		Stand Pipes	4x1 = 4	30x20% = 6	10	1 hr.	1¼	
		Old Stand Pipes, Trued			24	30 min.	1½	
		Throttle Valve Shafts	4x1 = 4	30x20% = 6	10	1 hr.	1¼	
		Throttle Valve Stems	4x1 = 4	30x50% = 15	19	30 min.	1¾	
		Dome Caps	4x1 = 4	30x20% = 6	10	4 hrs.	5	
		Exhaust Pipes	4x1 = 4	30x50% = 15	19	1½ hr.	3⅛	26½ days 1 mach.
		Exhaust Nozzle Tips	4x2 = 8	30x2x40% = 24	32	40 min.	2⅝	
		Dry Pipe and Sleeves	4x2 = 8	30x2x20% = 12	20	40 min.	1⅝	
		Standpipe U Bolt, Drill and Tap	4x1 = 4	30x1 = 30	34	20 min.	1½	
		Front End Draw Casting	4x1 = 4	30x1x65% = 20	24	1 hr.	3	
		Standpipe Brace	4x1 = 4	30x50% = 15	19	15 min.	⅝	
		Throttle Stuffing Box and Gland	4x1 = 4	30x20% = 6	10	20 min.	⅝	
		Reversing Mechanism [7]	4x1 = 4	30x20% = 6	10	2⅝ hrs.	3	
		Dome Caps	4x1 = 4	30x20% = 6	10	1 hr.	1¼	
		Auxiliary Domes	4x1 = 4	30x20% = 6	10	1 hr.	1¼	
		Tee Heads	4x1 = 4	30x20% = 6	10	1¼ hr.	1½	
		Steam Pipes	4x2 = 8	30x2x40% = 24	32	2 hrs.	8	
		Exhaust Pipes	4x1 = 4	30x50% = 15	19	1 hr.	2⅜	
		Exhaust Pipe Shield	4x1 = 4	30x50% = 15	19	10 min.	½	
		Main Brace for Pilot	4x1 = 4	30x1x65% = 20	24	30 min.	1½	
Pilot and Miscellaneous Work	1 Vertical Drill, 22″	Bottom Frames	4x1 = 4	30x65% = 20	24	1 hr.	3	26⅛ days 1 mach.
		Top Rails	4x1 = 4	30x65% = 20	24	1 hr.	3	
		Corner Uprights	4x2 = 8	30x2x65% = 40	48	15 min.	1½	
		Smoke Arch Braces	4x2 = 8	30x2x50% = 30	38	30 min.	2⅜	
		Bumper Beam Castings	4x2 = 8	30x2x50% = 30	38	2 hrs.	9½	
		Driving Box Cellars		30x8x20% = 48	48	15 min.	1½	
		Shoes and Wedges	4x16 = 64	30x16 = 480	544	3½ min.	3¾	
		Piston Rod Packing Glands	4x2 = 8	30x2x35% = 21	29	20 min.	1¼	
		Valve Stem Packing Glands	4x2 = 8	30x2x35% = 21	29	15 min.	1	
Spring and Brake Rigging	1 Radial Drill, 3′ 2 Ver. Drills, 25″ and 40″	Spring Rigging	4x1 = 4	30x75% = 22	26	9 hrs.	29¼	87¼ days 3 mach.
		Brake Rigging	4x1 = 4	30x75% = 22	26	18 hrs.	58	

[3] Pairs. [6] See Driving Boxes. Levers, crank, shaft and arms, quadrant, quadrant brackets, latch, latch lifter and reach rod.

MACHINE SHOP.

Class of Work	Machine Tool	Operation	Number of Pieces per Month: New Engs.	Number of Pieces per Month: Repairs	Number of Pieces per Month: Total	Average Time per Piece	Total Days Work per Month	
Brass Work	1 Lathe, 16"x8'	Piston and Valve Stem Packing	4x4=16	30x4=120	136	1½ hr.	25½	1 mach.
	1 Lathe, 18"x10'	Tank Valves	4x2= 8	30x2x60%=36	44	40 min.	3⅔	21 days 1 mach.
		Throttle Stuffing Box and Gland	4x1= 4	30x20%=6	10	2 hrs.	2½	
		Turn Rocker Bushing			96	20 min.	4	
		Bells	4x1= 4	30x10%=3	7	3½ hrs.	3	
		Whistles	4x1= 4	30x20%=6	10	4 hrs.	5	
		Tank Hose Nuts and Connections			68	20 min.	2⅚	
		Hub Liner Bolts		128x8=1,024	1024	4 min.	8	
	1 Lathe, 14"x6'	Boiler Plugs	4x10=40	30x10x50%=150	190	4 min.	1 7/12	26¼ days 1 mach.
		Driving Box Plugs	4x8=32	30x8=240	272	7 min.	4	
		Muffler Valves Overhauled		30x2=60	60	1 hr.	7½	
		Feed Pipe Sleeve	4x2= 8	30x2x50%=30	38	17 min.	1¼	
		Valve Stems, etc.					4	
	1 Turret Lathe, 20"x6'; 4 Turret Lathes, 18"x6'	Relief Valves	4x2= 8	30x2x50%=30	38	2 hrs.	9½	149 days 5 mach.
		Relief Valves Overhauled		30x2x50%=30	30	20 min.	1¼	
		Blow-off Cocks	4x1= 4	30x50%=15	19	2½ hrs.	7⅔	
		Blow-off Cocks Overhauled		30x50%=15	15	30 min.	15/16	
		Water Glass Cocks	4x2= 8	30x2x50%=30	38	1½ hr.	8	
		Water Glass Cocks Overhauled		30x2x50%=30	30	20 min.	1¼	
		Gauge Cocks	4x6=24	30x6x50%=90	114	50 min.	12	
		Gauge Cocks Overhauled		30x6x50%=90	90	8 min.	1½	
		Air Pump Valves, 1" Angle	4x1= 4	30x50%=15	19	95 min.	3⅔	
		Air Pump Valves Overhauled		30x50%=15	15	25 min.	⅞	
		Blower Valves, 1¼"	4x2= 8	30x2x50%=30	38	95 min.	7⅓	
		Blower Valves Overhauled		30x2x50%=30	30	25 min.	1½	
		Injector Steam Valves, 2" Angle	4x2= 8	30x2x50%=30	38	2¼ hrs.	10¾	
		Injector Steam Valves Overhauled		30x2x50%=30	30	30 min.	1 7/16	
		Car Heater Valves		30x25%=7	7	95 min.	1⅜	
		Car Heater Valves Overhauled		30x25%=7	7	25 min.	⅜	
		Lubricator Valves, ¾" Angle	4x2= 8	30x2x50%=30	38	1½ hr.	7⅓	
		Lubricator Valves Overhauled		30x2x50%=30	30	20 min.	1¼	
		Steam and Air Gauge Cocks	4x2= 8	30x4x50%=60	68	25 min.	3½	
		Steam and Air Gauge Cocks Overh'l'd		30x4x50%=60	60	10 min.	1¼	
		Tallow Plugs	4x2= 8	30x2x50%=30	38	35 min.	2¾	
		Tallow Plugs Overhauled		30x2x50%=30	30	15 min.	1	
		Check Valves	4x2= 8	30x2x25%=15	23	2½ hrs.	7½	
		Check Valves Overhauled		30x25%=15	15	25 min.	⅝	
		Air Cyl. Cocks	4x4=16	30x4x50%=60	76	2 hrs.	19	
		Air Cyl. Cocks Overhauled		30x4x50%=60	60	8 min.	1	
		Pet Cocks, ⅜"	4x8=32	30x8x50%=120	152	30 min.	9½	
		Pet Cocks Overhauled		30x8x50%=120	120	6 min.	1½	
		Blower Connection	4x2= 8	30x4x50%=60	68	18 min.	2½	
		Tallow Pipe Conn. and Nuts	4x2= 8	30x2x50%=30	38	17 min.	1¼	
		Tank Cocks	4x1= 4	30x50%=15	19	70 min.	2¾	
		Tank Cocks Overhauled		30x50%=15	15	20 min.	⅝	
		Whistle Elbow	4x1= 4	30x25%=8	12	18 min.	7/16	
		Cab Door Lock and Slides	4x4=16	30x4x25%=30	46	30 min.	3	
		Brazing Rings			500		1	
		Ext., Gauge and Water Glass Cocks	4x8=32	30x8x25%=60	92	12 min.	¾	
		Pipe Sleeves and Nuts		34x8x25%=68	68	17 min.	2½	
		Filling Plugs and Nuts, Lubricator			30	15 min.	1	
		Drain Plugs for Lubricators			30		¼	
		Sand Nozzles			50		½	
		Safety Valve Extensions	4x2= 8	30x2x25%=15	23	20 min.	1	
		Nipples and Reducers			200	10 min.	4	
		Rocker Box Set Bolts		30x8x25%=60	60	4 min.	½	
Air Brake Work	1 Lathe, 16"x6'	Air Pump Piston Rods		30x50%=15	15	2½ hrs.	4¾	15⅔ days 1 mach.
		Old Piston Rods Rep'd [6]		30x50%=15	15	40 min.	1¼	
		Fulcrum Shaft	4x2= 8	30x2x25%=15	23	1½ hr.	4⅜	
		Refitting Brake Hanger Posts	4x6=24	30x6x75%=135	159	15 min.	5	
Rod Brasses	1 B. B. Ver. Milling Mach.; 1 Ver. Rapid Prod. Lathe, 37" Bullard, 4 Jaw Chuck	Shape or Mill	4x4=16	30x4=120	136	2 hrs.	34	1 mach.
		Bore and Face	4x4=16	30x4=120	136	40 min.	11⅓	25½ days 1 mach.
		Bore Bushing and Turn	4x8=32	30x8=240	272	25 min.	14⅙	
Miscellaneous Castings	1 Ver. Boring Mill, 51"	Sand Boxes, Top and Base	4x1= 4	30x10%=3	7	3 hrs.	2⅝	26⅔ days 1 mach.
		Eng. Truck Tires		30x3x10%=10	10	3 hrs.	3¾	
		Dome Rings	4x1= 4	30x5%=2	6	2 hrs.	1½	
		Crossheads, Face, Bore, Turn	4x2= 8	30x2x15%=9	17	8 hrs.	17	
		Crossheads, Rebore Old		30x2x20%=12	12	1 hr.	1½	
	1 Lathe, 24"x10'	Sand Box Shaft	4x1= 4	30x10%=3	7	1 hr.	⅞	19⅞ days 1 mach.
		Bell Yoke	4x1= 4	30x25%=8	12	1½ hr.	2¼	
		Hand Holes and Covers	4x1= 4	30x50%=15	19	30 min.	1¼	
		Male Center Casting	4x1= 4	30x20%=6	10	2 hrs.	2½	
		Mud Chambers	4x2= 8	30x2x50%=30	38	2 hrs.	9½	
		Tank Valve Racks	4x2= 8	30x2x50%=30	38	45 min.	3½	
		Expansion Braces	4x1= 4	30x10%=3	7	12 hrs.	10½	
		Guide Yokes	4x1= 4	30x15%=4	8	7 hrs.	7	
		Guide Yoke Brackets	4x2= 8	30x2x25%=15	23	3 hrs.	8⅝	
	1 Planer, 30"x8'; 1 Planer, 36"x10'; 1 Planer, 48"x12'	Guide Yoke Extensions	4x2= 8	30x2x10%=6	14	4 hrs.	7	81⅞ days 3 mach.
		Castings [7]	4x4=16	30x4x10%=12	28	2½ hrs	9	
		Filling Blocks	4x4=16	30x4x10%=12	28	2 hrs.	7	
		Driver Brake Fulcrums	4x2= 8	30x2x10%=6	14	40 min.	1⅛	
		Hopper Castings	4x1= 4	30x1x20%=6	10	40 min.	7/8	
		Drawhead Casting [8]	4x3=12	30x3x10%=9	21	6⅔ hrs.	17½	
		Chafing Blocks	4x1= 4	30x1x20%=6	10	1½ hrs.	1½	
		Crosstie Link Bracket, etc. [9]	4x1= 4	30x1x5%=2	6	15 hrs.	11¼	
	2 Radial Drills, 4' and 5'; 1 Ver. Drill, 32"	Drilling Miscellaneous Holes for New and Repair Work [10]			5500			3 mach.
Miscellaneous Forgings	1 Slotter, 12; 1 Slotter, 18"	Frame Braces	4x3=12	30x3x25%=23	35	3 hrs.	13⅛	58¾ days 2 mach.
		Equalizer, Main	4x1= 4	30x10%=3	7	5 hrs.	4⅜	
		Pedestal Binders		30x8x25%=60	60	1 hr.	7½	
		Grate Bearing Bars	4x2= 8	30x2x25%=15	23	2 hrs.	5¾	
		Frame Rails	4x4=16	30x4x10%=12	28	8 hrs.	28	
	1 Planer, 42"x10'; 1 Radial Drill, 4'	Pedestal Binders	4x8=32	30x8x10%=24	56	1½ hr.	9⅛	16⅛ days 1 mach. [12]
		Frame Braces	4x4=16	30x4x10%=12	28	2 hrs.	7	
		Miscellaneous [11]						
Stay-bolts	1 Lassiter 6-Spindle Mach.; 1 4-Spindle Drill	Staybolts, Av. 7½" Long	4x1500=6000	30x1500x30%=13,500	19,500	1080 [1]	18	1 mach.
		Telltale Holes in Bolts			19,500	800 [1]	24⅜	1 mach.
Pin Work	1 Gisholt Lathe for 6" Stock; 1 Gisholt Lathe for 4½" Stock	Crank Pins	4x6=24	30x6x50%=90	114			2 mach.
		Wrist Pins	4x2= 8	30x2=60	68	45 min.	6⅜	
		Knuckle Pins	4x4=16	30x4=120	136	20 min.	5⅔	

[1] Per day. [6] Old piston rods and heads filed and regrooved. [7] Center castings, female center, equalizer fulcrum, tender center castings. [8] Engine and tender, front and back. [9] Also lift shaft tie brace. [10] Drill center casting, engine and tender, fulcrum casting, expansion braces, filling blocks, driver brake fulcrum, hopper casting, drawhead castings, chaffing blocks, crosstie brace, mud chambers, tank valve racks, guide yokes, guide yoke brackets and extensions, sand boxes, dome rings, smoke box rings, fire door frames and doors, bell yokes and frames, hand hole plates and covers. [11] Drill frame braces, equalizers, binders, bearing bars and supports, crank pin collars, cab braces, foot board brackets, etc. Average 77 holes per day. [12] Available on miscellaneous castings.

MACHINE SHOP.

Class of Work	Machine Tool	Operation	Number of Pieces per Month: New Engs.	Repairs	Total	Average Time per Piece	Total Days Work per Month	
Miscellaneous Pins, Studs, Etc.	1 Turret Lathe, 3"x36" 1 Turret Lathe, 2½"x24" 3 Turret Lathes, 2"x24" 1 Lassiter Bolt Turner, 4-Head	Studs, average length 4½"	4x600=2400	30x600x50%=9000	11,400	175[1]	65	123 11/16 days 5 mach.
		Pins, average length 7"	4x80=320	30x80=2400	2,720	60[1]	45	
		Core Plugs, Piston Heads	4x8=32	30x8=240	272	125[1]	2 1/8	
		Wedge Adjusting Screws	4x8=32	30x8=240	272	40[1]	6 3/8	
		Driver Brake Adj. Screws	4x2= 8	30x2=60	68	16[1]	4 1/4	
		Bolts, Av. 7" Long	4x274=1896	30x474x50%=7110	9006	300[1]	30	1 mach.
	1 Centering Machine, 2"							1 mach.
	2 Lathes, 14"x5'	For Fitting Bolts						2 mach.
	3 Lathes, Portable[12]	For Fitting Bolts						3 mach.
	1 Bolt Pointer, 2"							1 mach.
	1 Threading Machine, D.H.							1 mach.
	1 Nut Tapper							1 mach.
	1 Nut Facing Machine							1 mach.
	1 Mach. for Pipe Nipples							1 mach.
	1 Pipe Cutting Mach., 6"							1 mach.
	2 Friction Drills, 13"							2 mach.

[1] Per day. [12] For erecting shop (14"x5').

BOILER SHOP.

Class of Work	Machine Tool	Operation	New Engs.	Repairs	Total	Average Time per Piece	Total Days Work per Month	
Shearing and Punching	1 Throat Shear, 60" 1 Throat Shear, 36"	Flue Sheet, P. and S.	4x2= 8	30x2x20%=12	20	1 hr.	2½	63 15/16 days 2 mach.
		Door Sheet, Firebox, P. and S.	4x1= 4	30x1x25%=7	11	3 hrs.	4 1/8	
		Door Sheet, Back Head, P. and S.	4x1= 4	30x1x10%=3	7	3½ hrs.	3	
		Throat Sheet, Firebox, P. and S.	4x1= 4	30x1x25%=7	11	3½ hrs.	4 3/4	
		Throat Sheet, Boiler, P. and S.	4x1= 4	30x1x4%=1	5	4 hrs.	2½	
		Crown Sheet, Boiler, Shear	4x1= 4	30x1x4%=1	5	45 min.	3 3/4	
		Crown Sheet, Firebox, Shear	4x1= 4	30x1x25%=7	11	45 min.	1	
		Side Sheets, Firebox, Shear	4x2= 8	30x2x27%=16	24	1 hr.	3	
		Side Sheets, Boiler, Shear	4x2= 8	30x2x4%=2	10	1 hr.	1¼	
		Cyl. Courses, Shear[6]	4x1= 4	30x1x4%=1	5	3 hrs.	1 7/8	
		Smoke Arch, Shear	4x1= 4	30x1x25%=7	11	2½ hrs.	3 3/8	
		Smoke Arch Liner, Shear	4x1= 4	30x1x25%=7	11	30 min.	11/16	
		Expansion Sheets, Shear	4x1= 4	30x1x10%=3	7	20 min.	¼	
		Brace Sheets, Shear	4x2= 8	30x2x10%=6	14	1 hr.	1¾	
		Cistern Sheets, Shear	4x1= 4	30x1x10%=3	7	4 hrs.	3½	
		Ash Pan Hopper and Wheel Covers	4x1= 4	30x1x30%=9	13	4 hrs.	6½	
		Grease Box Cases	4x10=40	30x10x25%=75	115	10 min.	2 3/8	
		Grease Box Plates	4x10=40	30x10x25%=75	115	5 min.	1 1/4	
		Fireman's Cab	4x1= 4	30x1x15%=4.5	8.5	4 hrs.	4¼	
		Engineer's Cab	4x1= 4	30x1x10%=3	7	6 hrs.	5¼	
		Foot Boards	4x4=16	30x4x5%=6	22	20 min.	1	
		Tank Cabs	4x1= 4	30x1x15%=4.5	8.5	1 hr.	1	
		Deck Plates	4x4=16	30x4x10%=12	28	10 min.	⅝	
		Diaphragm Plates	4x1= 4	30x1x10%=3	7	15 min.	¼	
		Draft Pipe and Netting	4x1= 4	30x1x10%=3	7	20 min.	¼	
		Hopper Chutes	4x1= 4	30x1x10%=3	7	20 min.	¼	
		Coal Box for Tenders	4x1= 4	30x1x10%=3	7	20 min.	¼	
		Shoe and Wedge Liners	.....	30x32x75%=720	720	.....	⅝	
		Coal Aprons	4x1= 4	30x1x10%=3	7	30 min.	7/16	
		Pilot Steps	4x2= 8	30x2x50%=30	38	5 min.	⅜	
		Wedge Sheets	4x1= 4	30x1x10%=3	7	20 min.	¼	
		Wind Shields in Cab	4x2= 8	30x2x10%=6	14	15 min.	7/16	
		Cylinder Plates	4x2= 8	30x2x10%=6	14	10 min.	¼	
		Bumper Beam Sheets	4x1= 4	30x1x10%=3	7	20 min.	¼	
		Cab Sheets	4x2= 8	30x2x10%=6	14	10 min.	¼	
		Tool Boxes	4x1= 6	30x1x10%=3	7	20 min.	¼	
		Flag Boxes	4x1= 4	30x1x10%=3	7	10 min.	⅛	
		Cab Ventilators	4x1= 4	30x1x10%=3	7	10 min.	⅛	
Punching	1 Throat Punch, 60" 1 Throat Punch, 36" 1 Throat Punch, 16"	Flue Sheets, Front and Back	4x2= 8	30x2x20%=12	20	1¾ hr.	4 3/8	67½ days 3 mach.
		Door Sheet, Fire Box	4x1= 4	30x1x25%=7	11	1½ hr.	1¾	
		Door Sheet, Back Head	4x1= 4	30x1x10%=3	7	1⅝ hr.	1½	
		Throat Sheet, Fire Box	4x1= 4	30x1x25%=7	11	45 min.	1	
		Throat Sheet, Boiler	4x1= 4	30x1x4%=1	5	40 min.	⅜	
		Crown Sheet, Boiler	4x1= 4	30x1x4%=1	5	3¼ hrs.	2½	
		Crown Sheet, Fire Box	4x1= 4	30x1x25%=7	11	3⅝ hrs.	5⅛	
		Side Sheets, Boiler	4x2= 8	30x2x4%=2	10	2¾ hrs.	3 7/16	
		Side Sheets, Fire Box	4x2= 8	30x2x27%=16	24	3 7/16 hrs.	10	
		Cyl. Courses of Boiler	4x1= 4	30x1x4%=1	5	8½ hrs.	5⅛	
		Smoke Arches	4x1= 4	30x1x25%=7	11	1⅜ hr.	1 7/8	
		Smoke Arch Liners	4x1= 4	30x1x25%=7	11	1 hr.	1⅜	
		Expansion Sheets	4x1= 4	30x1x10%=3	7	15 min.	¼	
		Brace Sheets	4x2= 8	30x2x10%=6	14	45 min.	1 5/16	
		Ash Pan Hoppers and Wheel Covers	4x1= 4	30x1x30%=9	13	5 hrs.	8⅛	
		Grease Box Cases	4x10=40	30x10x25%=75	115	1½ min.	⅜	
		Fireman's Cabs	4x1= 4	30x1x15%=4.5	8.5	4 hrs.	4¼	
		Engineer's Cabs	4x1= 4	30x1x10%=3	7	7 hrs.	6⅛	
		Running Boards	4x4=16	30x4x5%=6	22	20 min.	7/16	
		Tank Cabs	4x1= 4	30x1x15%=4.5	8.5	2 hrs.	2⅛	
		Deck Plates	4x4=16	30x4x10%=12	28	6 min.	⅜	
		Diaphragm Plates	4x1= 4	30x1x10%=3	7	8 min.	⅛	
		Draft Pipes	4x1= 4	30x1x10%=3	7	15 min.	¼	
		Hopper Chutes	4x1= 4	30x1x10%=3	7	8 min.	⅛	
		Coal Box for Tender	4x1= 4	30x1x10%=3	7	15 min.	¼	
		Coal Aprons	4x1= 4	30x1x10%=3	7	10 min.	⅛	
		Pilot Steps	4x2= 8	30x2x50%=30	38	10 min.	¾	
		Wind Shields, Fireman's Cab	4x1= 4	30x1x10%=3	7	20 min.	¼	
		Wind Shields, Engr's Cab	4x2= 8	30x2x10%=6	14	6 min.	3/16	
		Cab Sheets	4x2= 8	30x2x10%=6	4	3 min.	1/32	
		Wind Shields in Cab	4x2= 8	30x2x10%=6	14	15 min.	7/16	
		Cylinder Plates	4x2= 8	30x2x10%=6	14	5 min.	⅛	
		Bumper Beam Plate	4x1= 4	30x1x10%=3	7	10 min.	⅛	
		Tool Box	4x1= 4	30x1x10%=3	7	30 min.	7/16	
		Flag Box	4x1= 4	30x1x10%=3	7	10 min.	⅛	
		Cab Ventilator	4x1= 4	30x1x10%=3	7	5 min.	7/16	
		Tender Frames	4x1= 4	30x1x4%=1	5	3⅛ hrs.	2	
	1 Punch and Shear and 25' Spacing Table 1 Flange Punch	Cistern Sheets	4x1= 4	30x1x10%=3	7	2¾ days	19¼	2 mach.
		Flue Sheets, Front and Back	4x2= 8	30x2x20%=12	20	25 min.	1	
		Throat Sheets, Fire Box	4x1= 4	30x1x25%=7	11	45 min.	1	
		Throat Sheets, Boiler	4x1= 4	30x1x4%=1	5	95 min.	1	
		Door Sheets, Back Head	4x1= 4	30x1x4%=1	5	45 min.	7/16	
		Door Sheets, Fire Box	4x1= 4	30x1x25%=7	11	35 min.	13/16	
Flanging	1 Hydraulic Flange Press.	Back Flue Sheets	4x1= 4	30x1x20%=6	10	45 min.	15/16	15½ days 1 mach.
		Front Flue Sheets	4x1= 4	30x1x20%=6	10	45 min.	15/16	
		Throat Sheet, Firebox	4x1= 4	30x1x20%=6	10	3 hrs.	3¾	
		Throat Sheet, Boiler	4x1= 4	30x1x4%=1	5	4 hrs.	2½	
		Dome Saddles	4x1= 4	30x1x4%=1	5	1 hr.	⅝	
		Door Sheet, Firebox	4x1= 4	30x1x25%=7	11	1 hr.	1⅜	
		Door Sheet, Boiler Back Head	4x1= 4	30x1x4%=1	5	2⅛ hrs.	1 7/8	
		Door Holes	4x2= 8	30x2x20%=12	20	30 min.	1¼	
		Steam Chest Casing	4x2= 8	30x2x10%=6	14	12 min.	⅜	
		Cyl. Head Casings	4x4=16	30x4x10%=12	28	10 min.	⅝	
		Sand Box Casings	4x1= 4	30x1x10%=3	7	45 min.	⅝	
		Dome Casings	4x2= 8	30x2x10%=6	14	45 min.	1¼	

BOILER SHOP.

Class of Work	Machine Tool	Operation	Number of Pieces per Month: New Engs.	Number of Pieces per Month: Repairs	Number of Pieces per Month: Total	Average Time per Piece	Total Days Work per Month	
Roll	1 Bending Roll, 15' 1 Bending Roll, 8'	Crown Sheet of Firebox	4x1 = 4	30x1x25% = 7	11	1 hr.	$1\frac{3}{8}$	2 mach.
		Side Sheets, Firebox	4x2 = 8	30x2x27% = 16	24	1 hr.	3	
		Crown Sheets, Boiler	4x1 = 4	30x1x4% = 1	5	1 hr.	$\frac{5}{8}$	
		Side Sheets, Boiler	4x2 = 8	30x2x4% = 2	10	1 hr.	$1\frac{1}{4}$	
		Cyl. Courses, Boiler[6]	4x1 = 4	30x1x4% = 1	5	$4\frac{1}{2}$ hrs.	$2\frac{3}{4}$	
		Smoke Arches	4x1 = 4	30x1x25% = 7	11	$1\frac{1}{2}$ hrs.	2	
		Domes	4x1 = 4	30x1x4% = 1	5	45 min.	$3\frac{3}{4}$	
		Smoke Arch Rings	4x1 = 4	30x1x25% = 7	11	1 hr.	$1\frac{3}{8}$	
		Smoke Arch Liners	4x1 = 4	30x1x25% = 7	11	30 min.	$\frac{11}{16}$	
		Cistern Sheets	4x1 = 4	30x1x10% = 3	7	4 hrs.	$3\frac{1}{2}$	
		Hopper Chutes	4x1 = 4	30x1x10% = 3	7	30 min.	$\frac{7}{16}$	
		Draft Pipes	4x1 = 4	30x1x10% = 3	7	30 min.	$\frac{7}{16}$	
		Engineer's Cab Roofs	4x1 = 4	30x1x4% = 1	5	30 min.	$\frac{5}{16}$	
		Tank Cabs	4x1 = 4	30x1x10% = 3	7	30 min.	$\frac{7}{16}$	
		Fireman's Cabs	4x1 = 4	30x1x10% = 3	7	30 min.	$\frac{7}{16}$	
		Manholes for Cistern	4x1 = 4	30x1x20% = 6	10	20 min.	$\frac{5}{8}$	
Plane	1 Plate Planer, 30'	Crown Sheets, Firebox	4x1 = 4	30x1x25% = 7	11	$1\frac{1}{2}$ hr.	2	16 days 1 mach.[12]
		Side Sheets, Firebox	4x2 = 8	30x2x27% = 16	24	$1\frac{1}{2}$ hrs.	$4\frac{1}{2}$	
		Crown Sheets, Boiler	4x1 = 4	30x1x4% = 1	5	$1\frac{1}{2}$ hrs.	1	
		Side Sheets, Boiler	4x2 = 8	30x2x4% = 2	10	$1\frac{1}{2}$ hrs.	2	
		Cyl. Courses for Shell[7]	4x1 = 4	30x1x4% = 1	5	6 hrs.	$3\frac{3}{4}$	
		Smoke Arches	4x1 = 4	30x1x25% = 7	11	$1\frac{1}{2}$ hr.	2	
		Running Boards	4x4 = 16	30x4x10% = 12	28	10 min.	$\frac{5}{8}$	
Hyd. Riveting	Hyd. Gap Riveter, 17' Throat, 54" Gap	Riveting Boiler	4x1 = 4	30x1x4% = 1	5	2 days	10	1 mach.
Drilling	1 Radial Drill, 6' 1 Horizontal Drill 1 4 Spindle Drill	Plate Frames	4x1 = 4	30x1x75% = 22	26	3 hrs.	$9\frac{3}{4}$	$89\frac{3}{4}$ days 3 mach.
		Bearing Bar Support Brackets	4x4 = 16	30x4x10% = 12	28	10 min.	$\frac{5}{8}$	
		Shaker Rods and Brackets	4x1 = 4	30x1x25% = 7	11	$3\frac{1}{2}$ hrs.	$4\frac{3}{4}$	
		Tender Frames	4x1 = 4	30x1x10% = 3	7	3 days	21	
		Plug Holes in Back Head	4x5 = 20	30x5x4% = 5	25	8 min.	$\frac{3}{8}$	
		Flue Holes	4x2x350 = 2800	30x2x350x20% = 4200	7000	.....	24	
		Smoke Arch Front Ring	4x1 = 4	30x1x25% = 7	11	6 hrs.	$8\frac{1}{4}$	
		Bead Iron for Cistern	4x1 = 4	30x1x10% = 3	7	2 hrs.	$1\frac{3}{4}$	
		Dome Saddle	4x1 = 4	30x1x4% = 1	5	6 hrs.	$3\frac{3}{4}$	
		Dry Pipe Hole in Flue Sheet	4x1 = 4	30x1x20% = 6	19	1 hr.	$1\frac{1}{4}$	
		Reinforcing Ring	4x1 = 4	30x1x20% = 6	10	1 hr.	$1\frac{1}{4}$	
		Bearing Bar Supports	4x2 = 8	30x2x25% = 15	23	15 min.	$\frac{3}{4}$	
		Mud Ring	4x1 = 4	30x1x10% = 3	7	14 hrs.	$12\frac{1}{4}$	
Flue Work	Flue Rattler	Clean Flues	.....	30x350 = 10,500	10,500	.....	.....	1 mach.
	1 Cutting-off Mach. 2 Cutting-off Mach. 2 D. H. Welding Machines	Making Safe Ends	.....	30x350 = 10,500	10,500	.....	22	3 mach.
		Measure and Cut to Length	4x350 = 1400	30x350 = 10,500	11,900	.....	56	
		Cutting Off Rough Ends	.....	30x350 = 10,500	10,500	.....	$16\frac{3}{4}$	
		Flues Scarfed	.....	30x350 = 10,500	10,500	.....	$16\frac{3}{4}$	2 mach.
		Flues Welded and Swaged	.....	30x350 = 10,500	10,500	.....	24	

[6] Three courses included. [7] Three courses included. [12] Available for planing throat sheets, flue sheets and door sheets on flange.

The above equipment study by Mr. Pomeroy was published in the April, 1909, issue of the *American Engineer & Railroad Journal.*

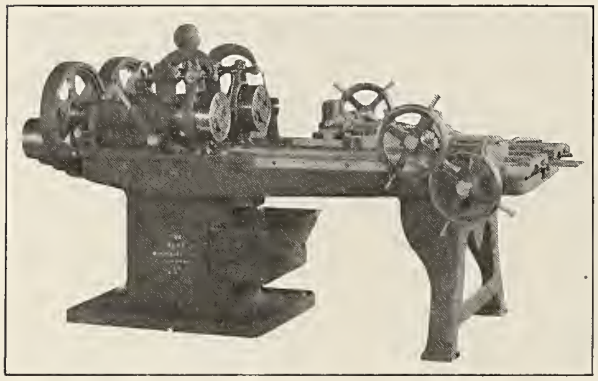

Fig 2351—Double Head 1½ in. Staybolt Cutter; Acme Machinery Company.

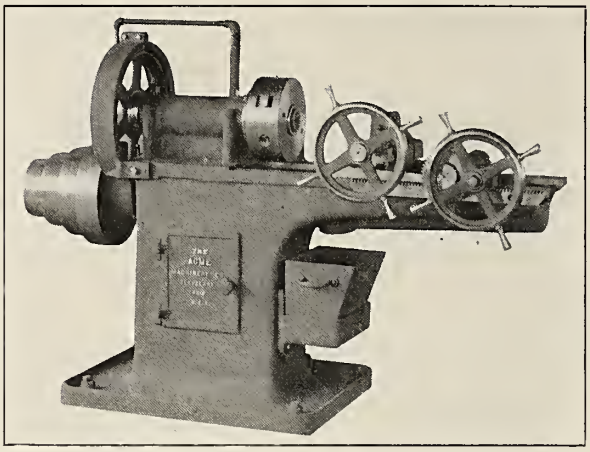

Fig. 2352—Single Head 2 in. Bolt Pointer; Acme Machinery Company.

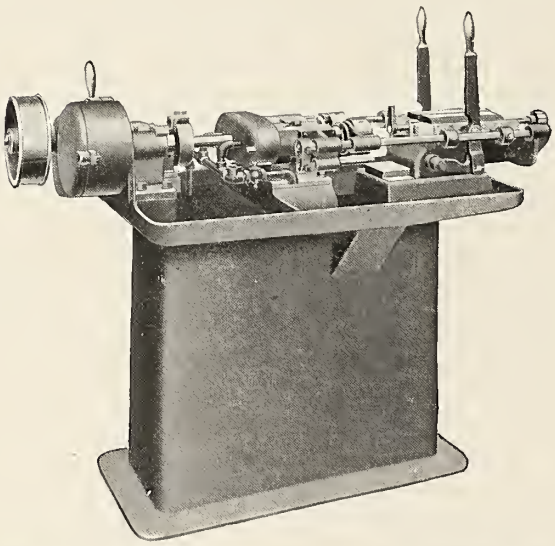

Fig. 2353—Namco Bolt Threader; The National-Acme Manufacturing Company.

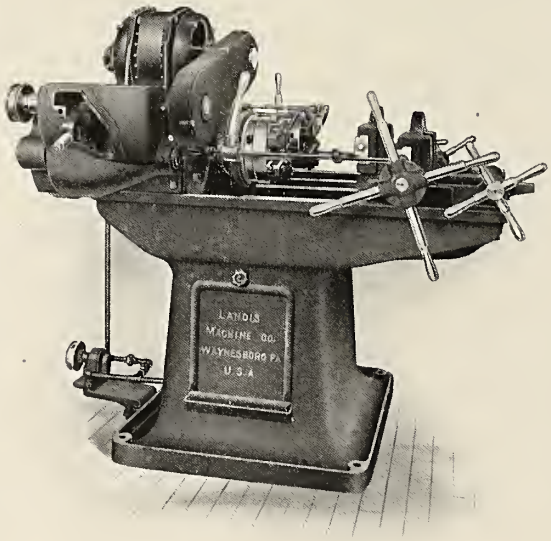

Fig. 2354—Double Head Bolt Cutter; Landis Machine Company.

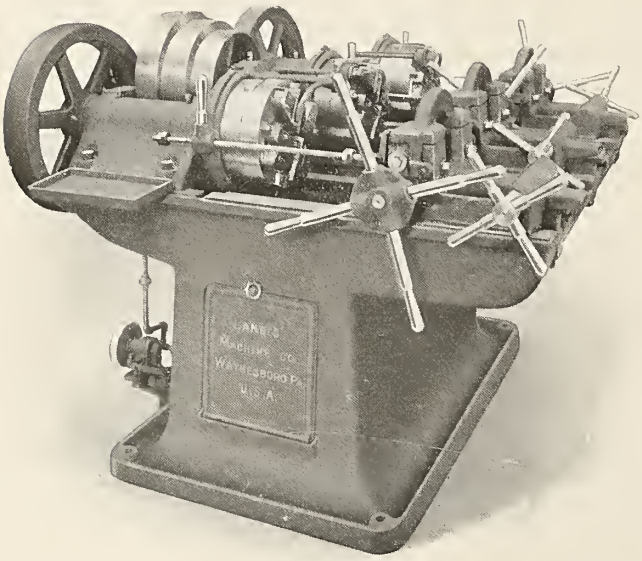

Fig. 2355—Triple Head 1½ in. Bolt Cutter; Landis Machine Company.

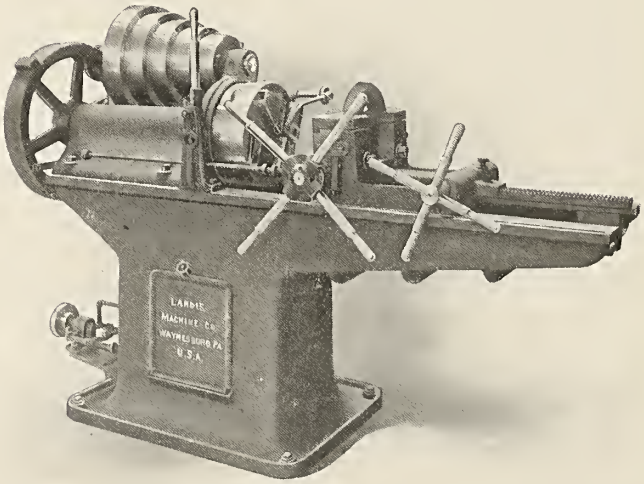

Fig. 2356—Single Head Bolt Cutter; Landis Machine Company.

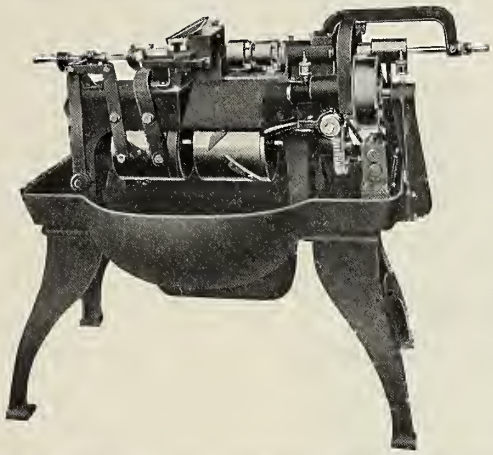

Fig. 2357—Namco Stud Threader; The National-Acme Manufacturing Company.

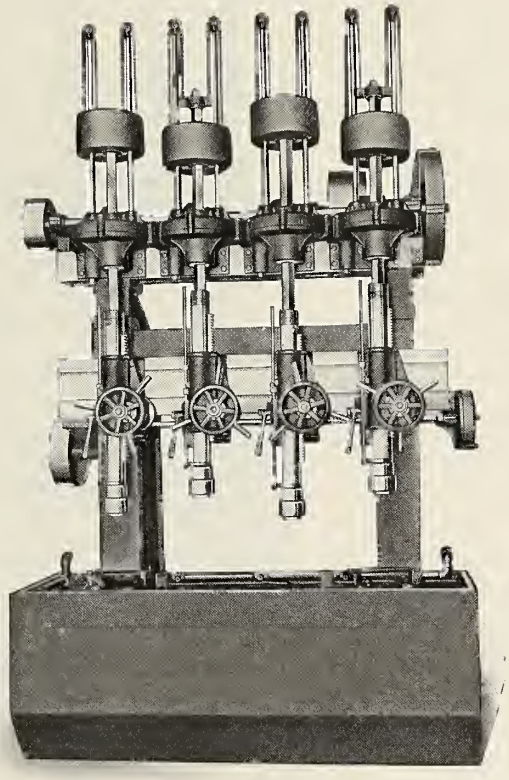

Fig. 2358—Taper Bolt Turning Machine; Edwin Harrington Son & Company.

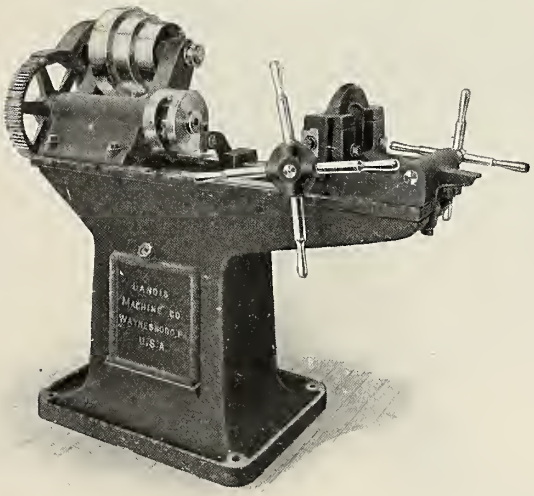

Fig. 2359—Bolt Pointing Machine; Landis Machine Company.

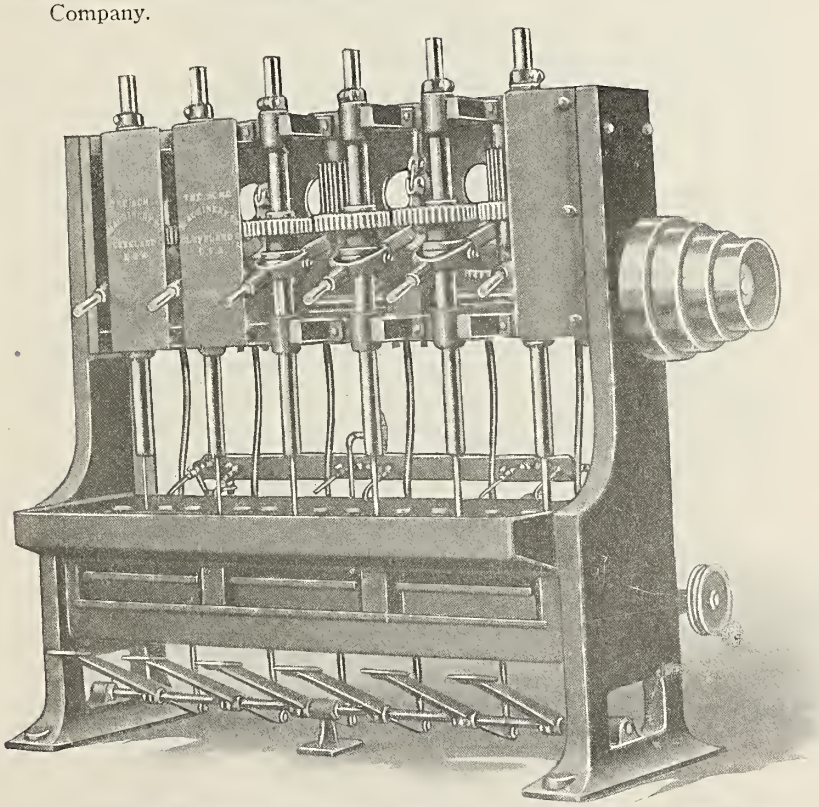

Fig. 2360—Six Spindle Nut Tapper; Acme Machinery Company.

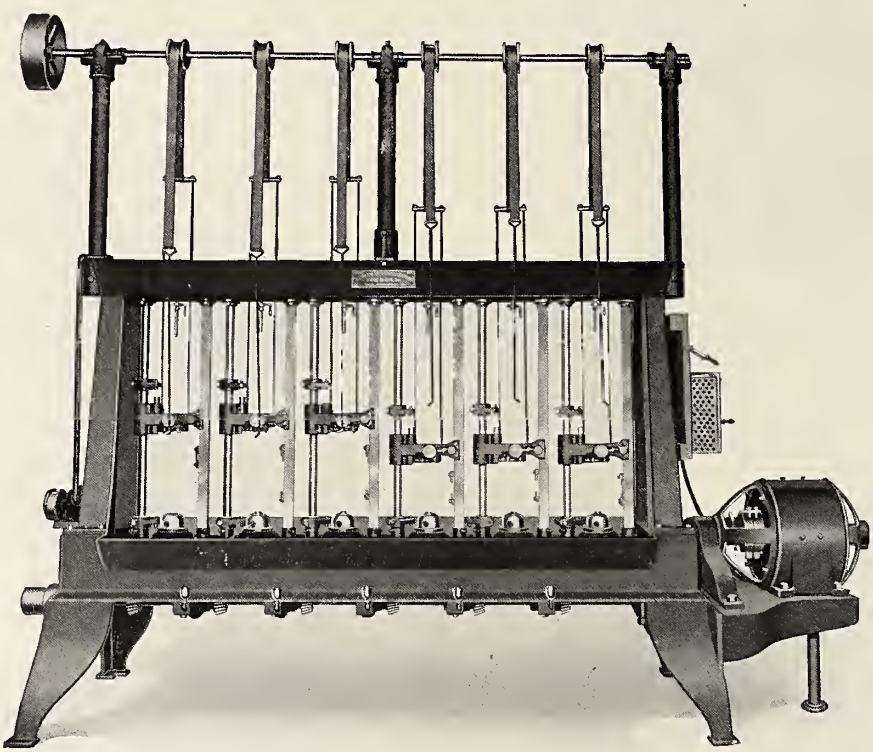

Fig. 2361—Staybolt Threading and Reducing Machine; Edwin Harrington, Son & Co.

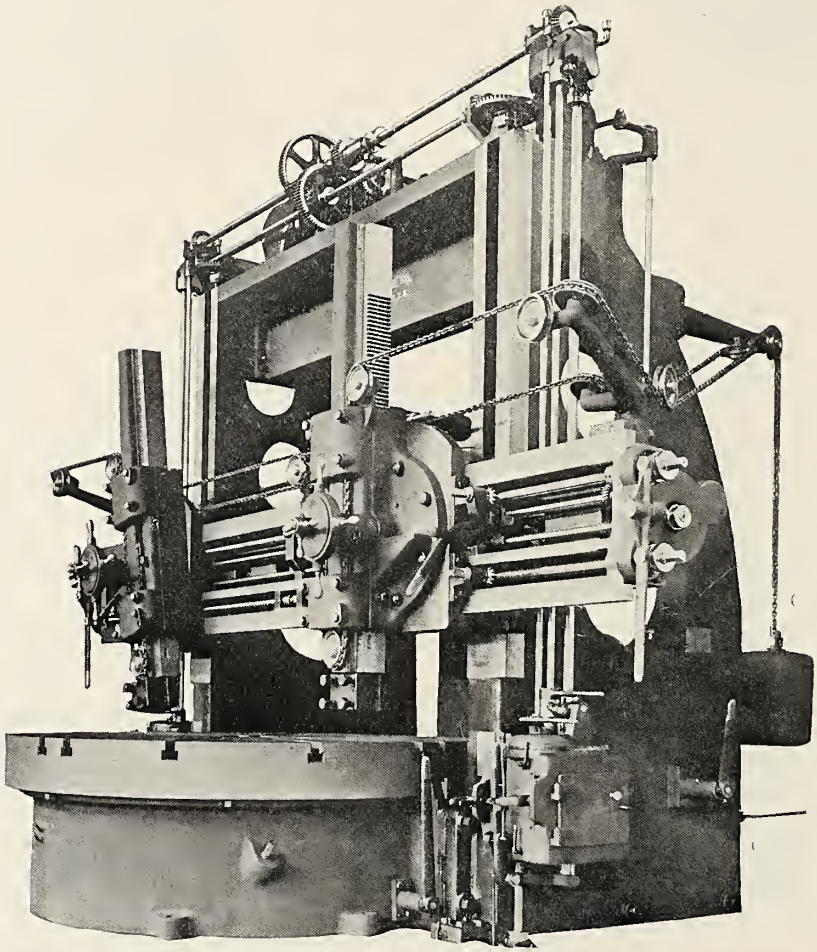

Fig. 2362—Seven ft. Boring and Turning Mill; Betts Machine Company.

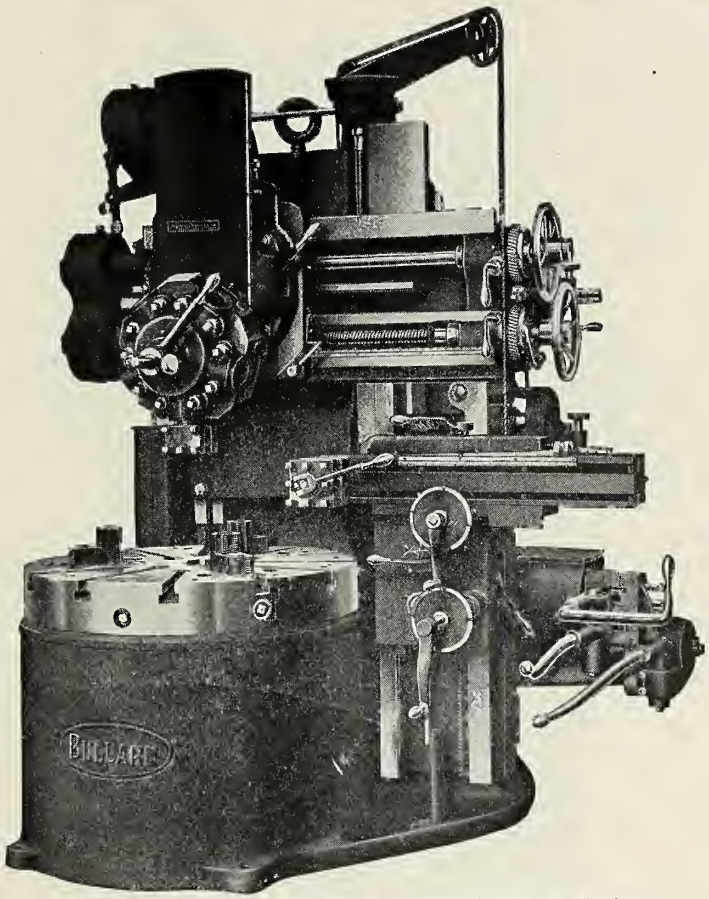

Fig. 2363—Front View, 42 in. Vertical Turret Lathe; Bullard Machine Tool Company.

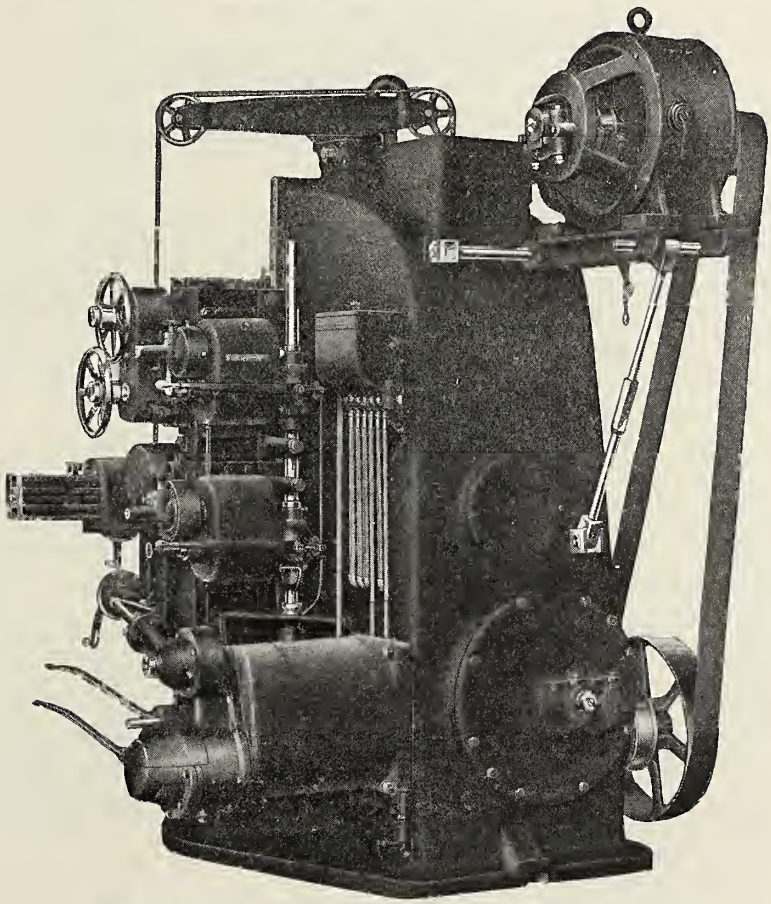

Fig. 2364—Rear View, 42 in. Vertical Turret Lathe; Bullard Machine Tool Company.

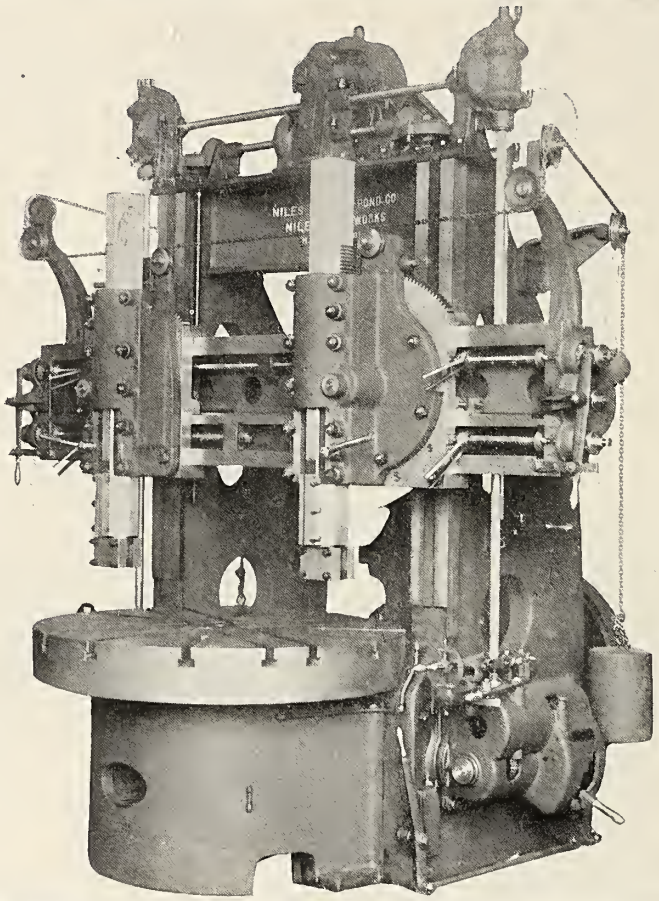

Fig. 2365—Niles 53 in. Boring and Turning Mill; Niles-Bement-Pond Company.

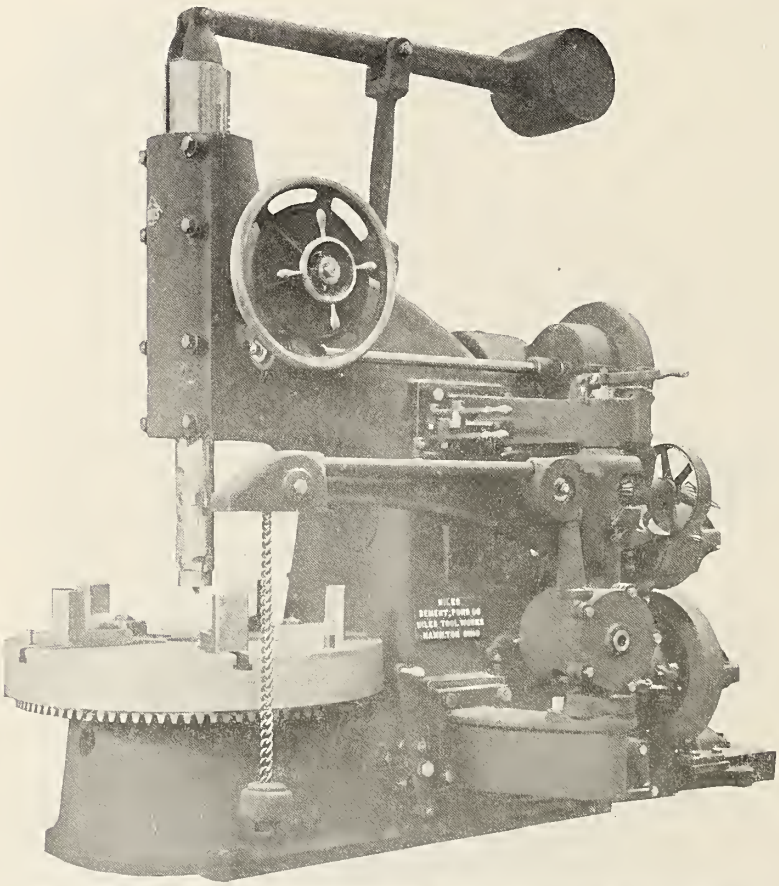

Fig. 2366—Niles 48 in. Standard Car Wheel Boring Mill; Niles-Bement-Pond Company.

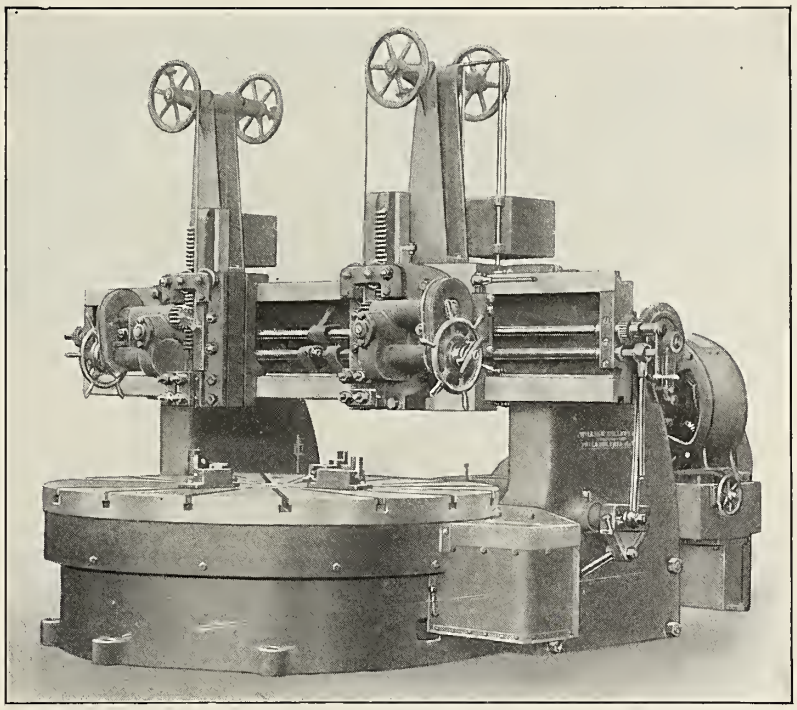

Fig. 2367—Tire Boring and Turning Mill; William Sellers & Company, Inc.

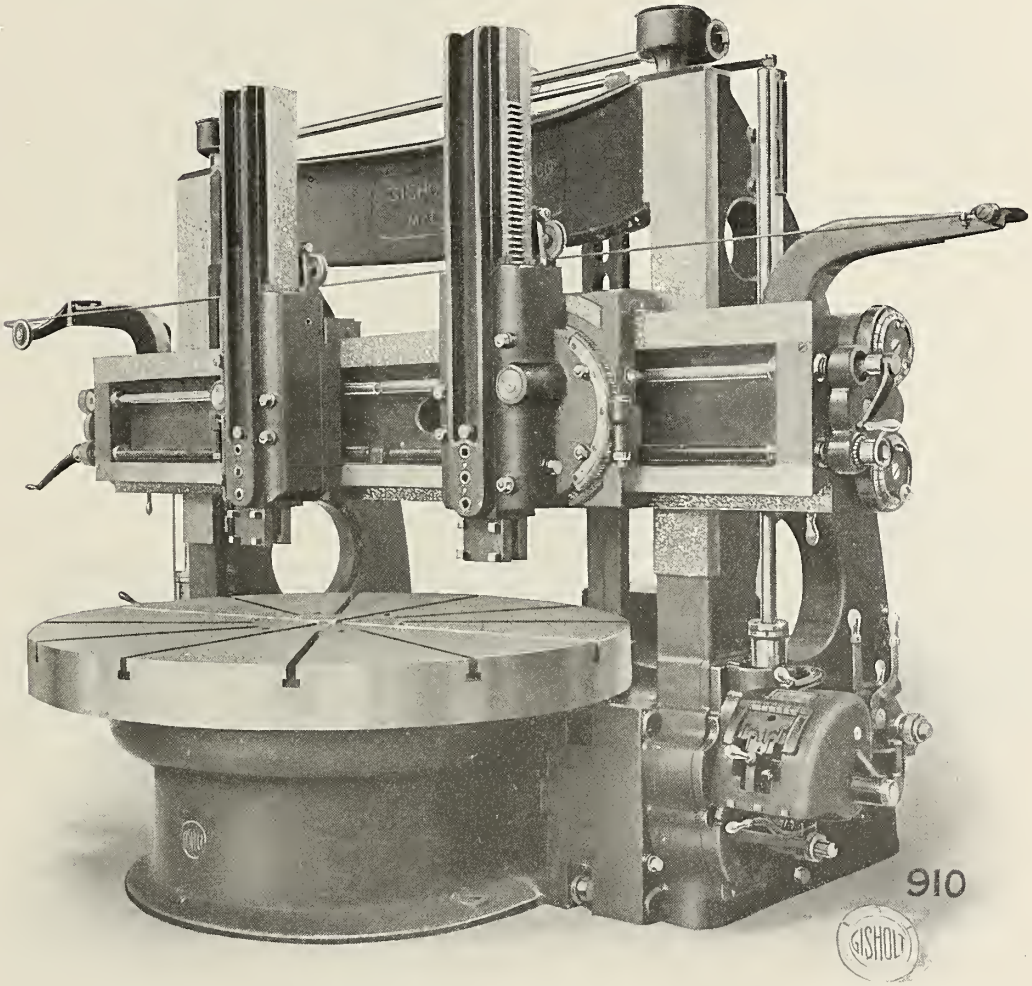

Fig. 2368—Standard 74 in. and 84 in. Boring Mill; Gisholt Machine Company.

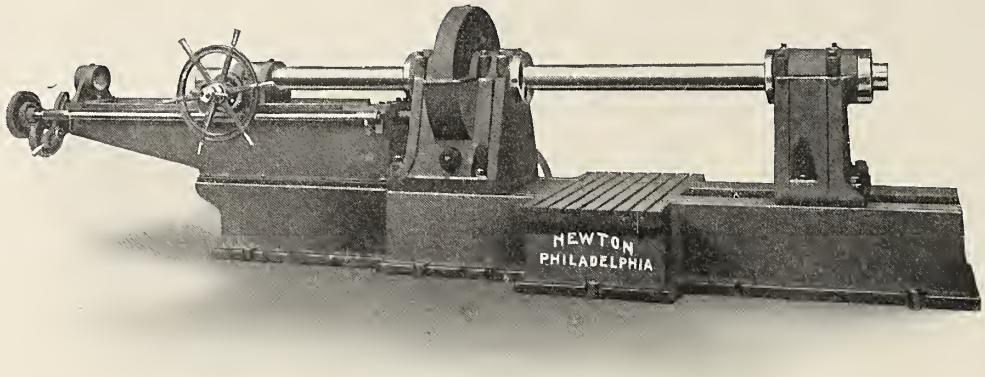

Fig. 2369—Cylinder Boring Machine; Newton Machine Tool Works.

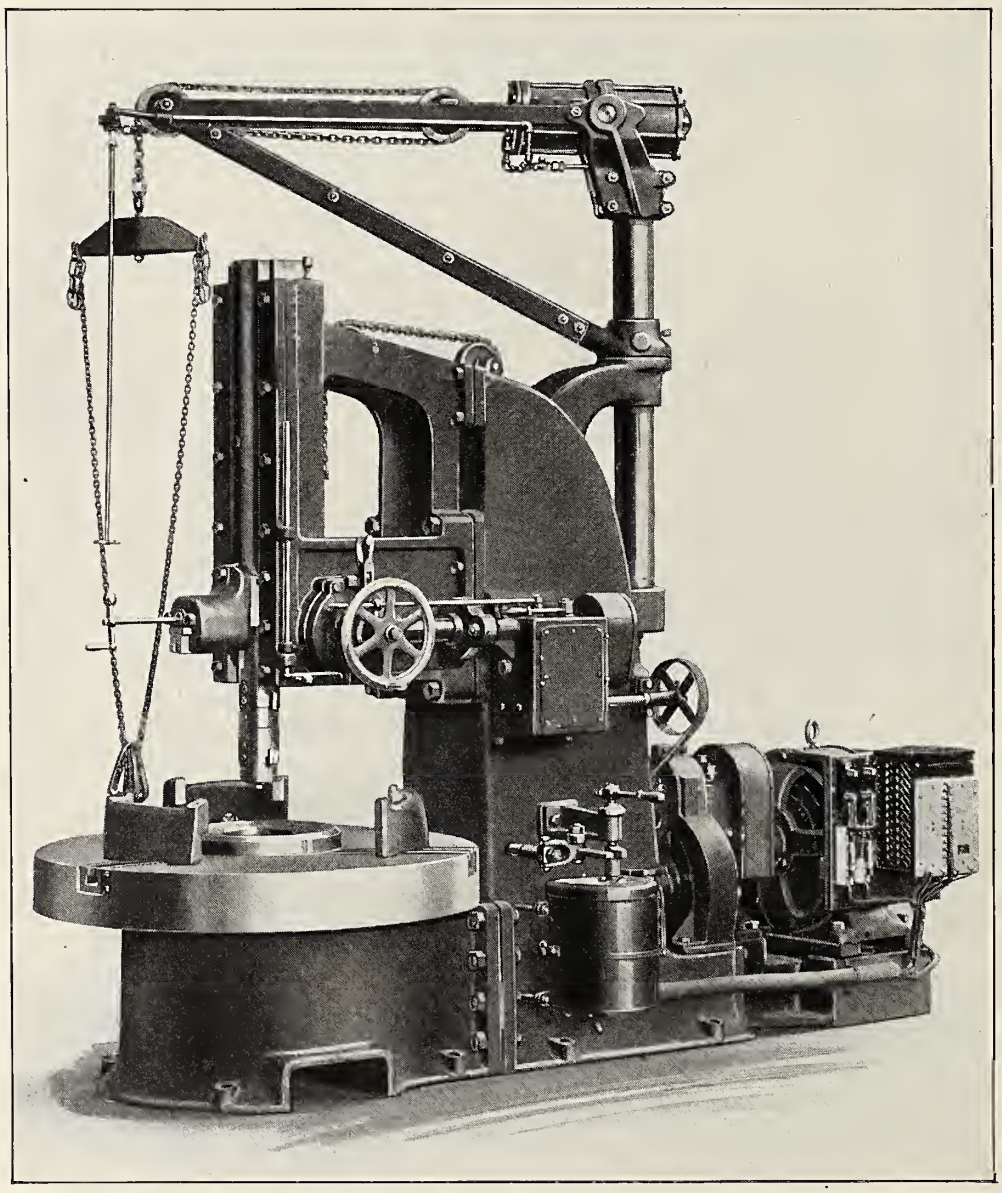

Fig. 2370—Car Wheel Boring Mill; William Sellers & Company, Inc.

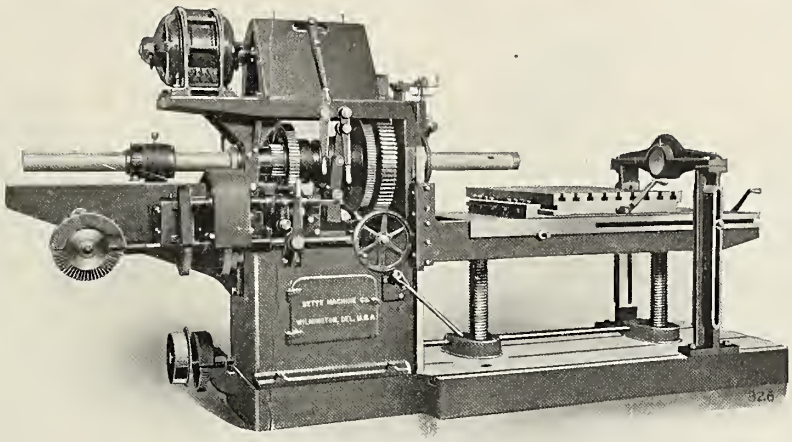

Fig. 2371—Motor Driven Horizontal Boring and Turning Machine; Betts Machine Company.

Fig. 2372—Heavy Pattern 48 in. Car Wheel Boring Machine with Hub Facing Attachment; Putnam Machine Company.

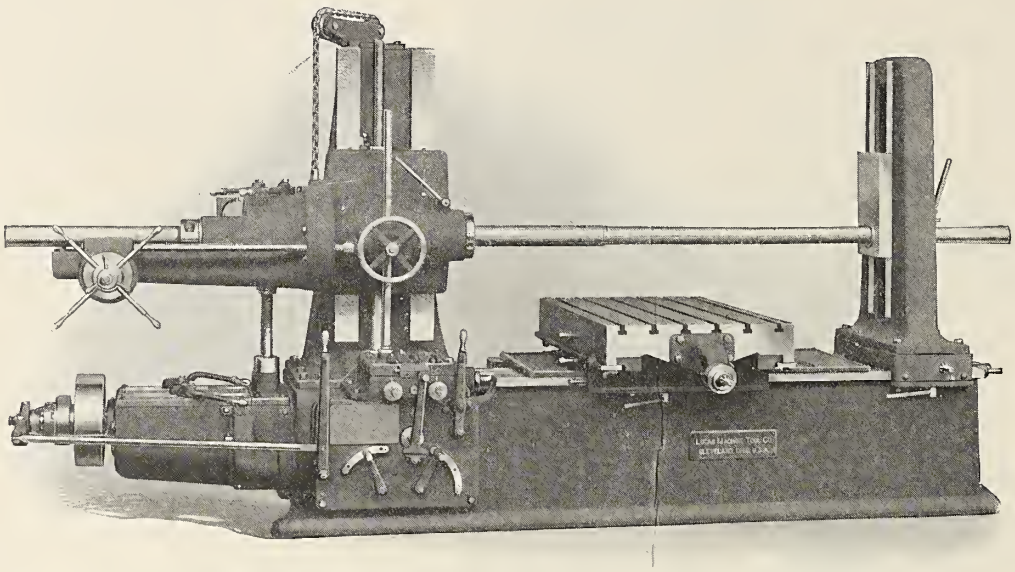

Fig. 2373—Standard Boring Machine; Lucas Machine Tool Company.

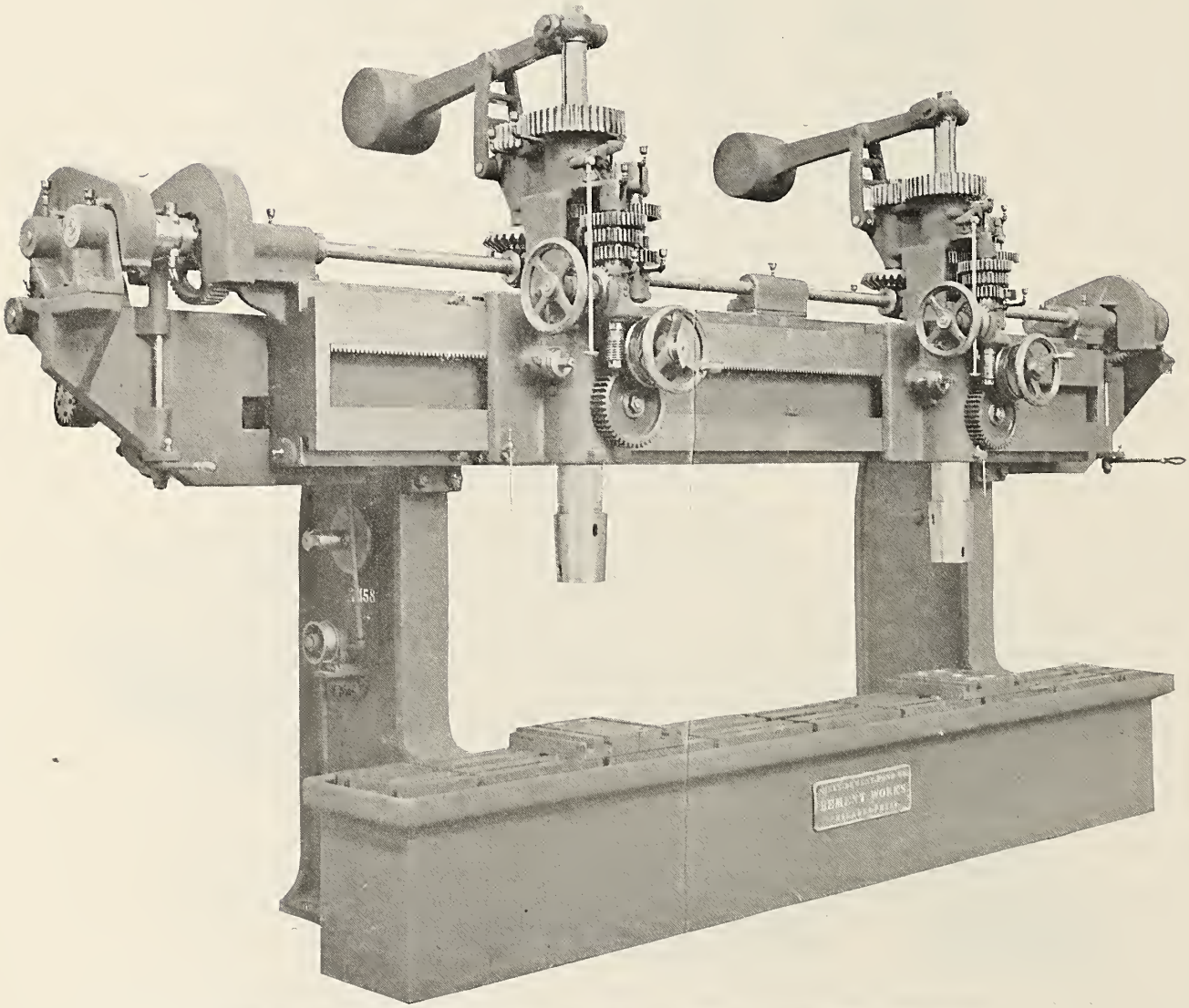

Fig. 2374—Bement No. 7 Rod Boring Machine; Niles-Bement-Pond Company.

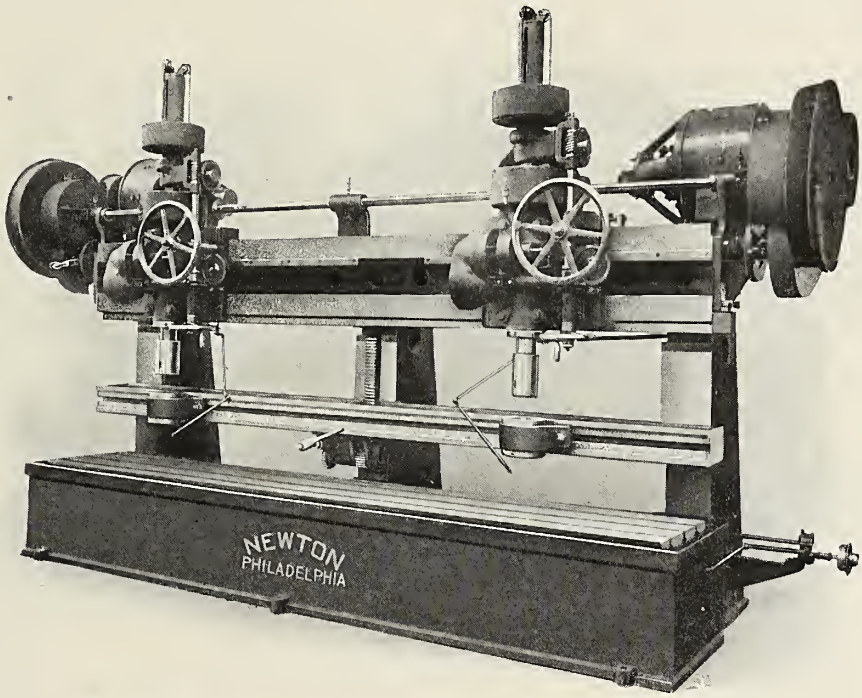

Fig. 2375—Rod Boring Machine; Newton Machine Tool Works.

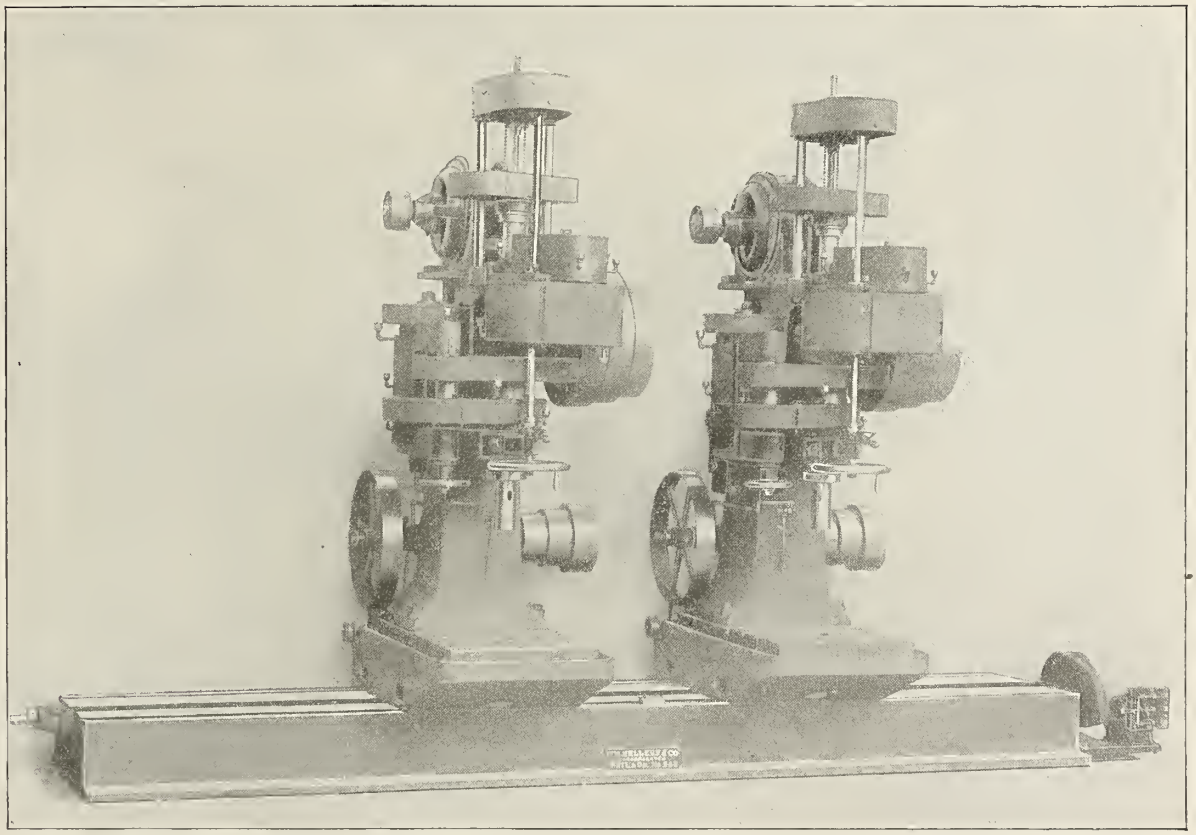

Fig. 2376—Locomotive Rod Borer; William Sellers & Company, Inc.

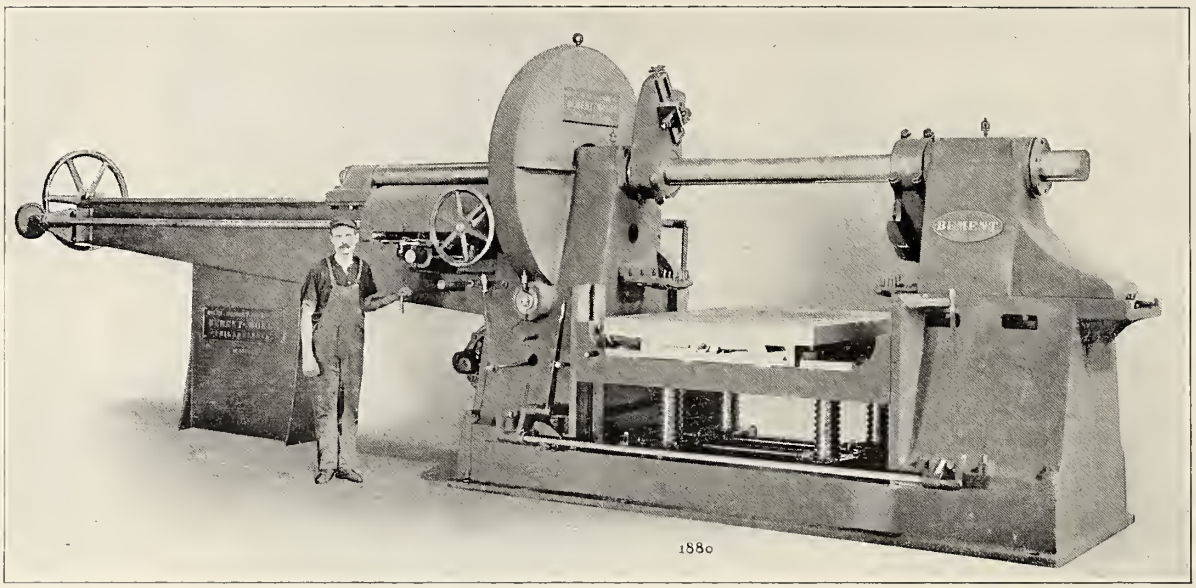

Fig. 2377—Cylinder Boring Machine; Niles-Bement-Pond Company.

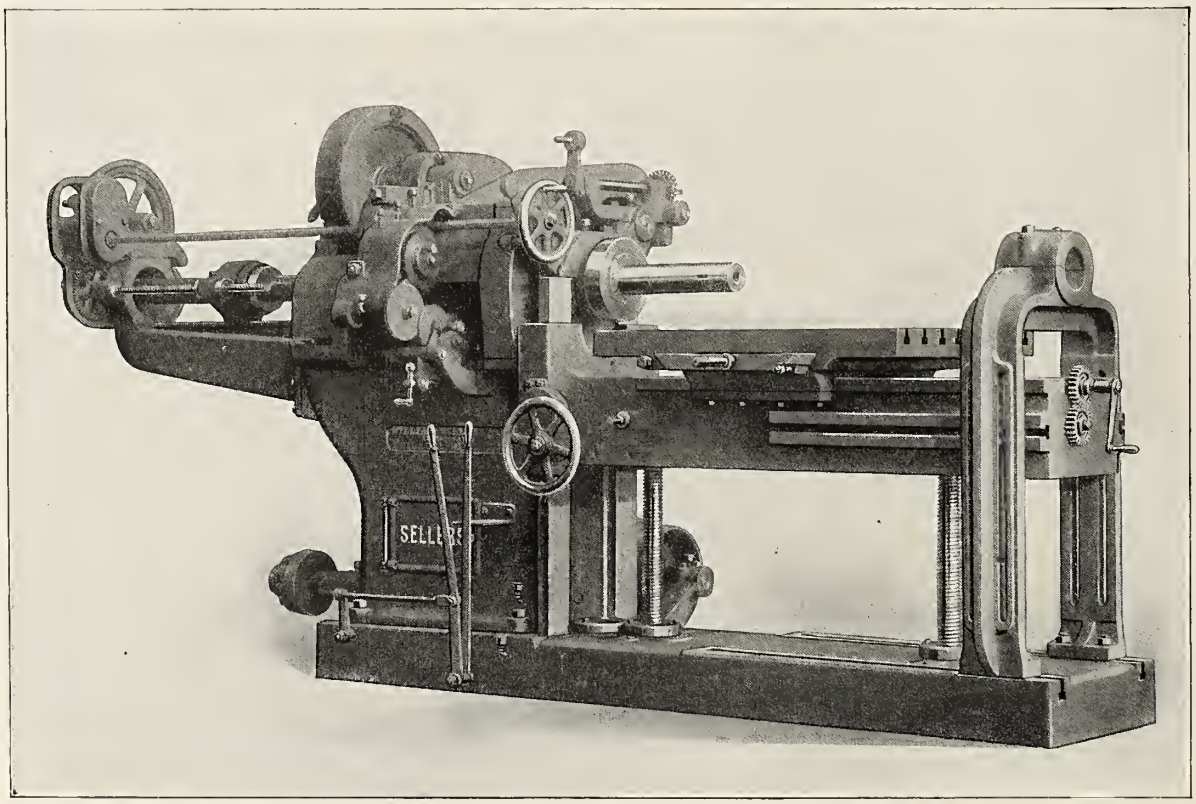

Fig. 2378—Horizontal Drill and Boring Mill; William Sellers & Company, Inc.

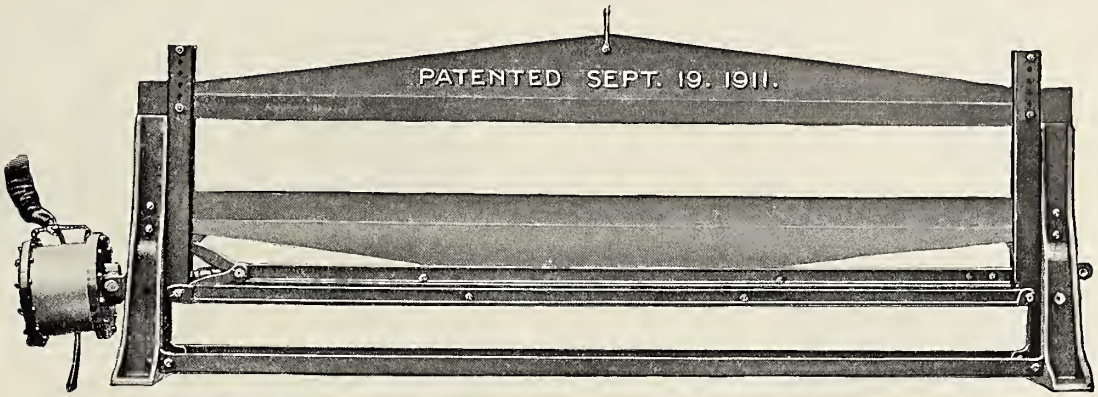

Fig. 2379—Power Flanging Clamp; Joseph T. Ryerson & Son.

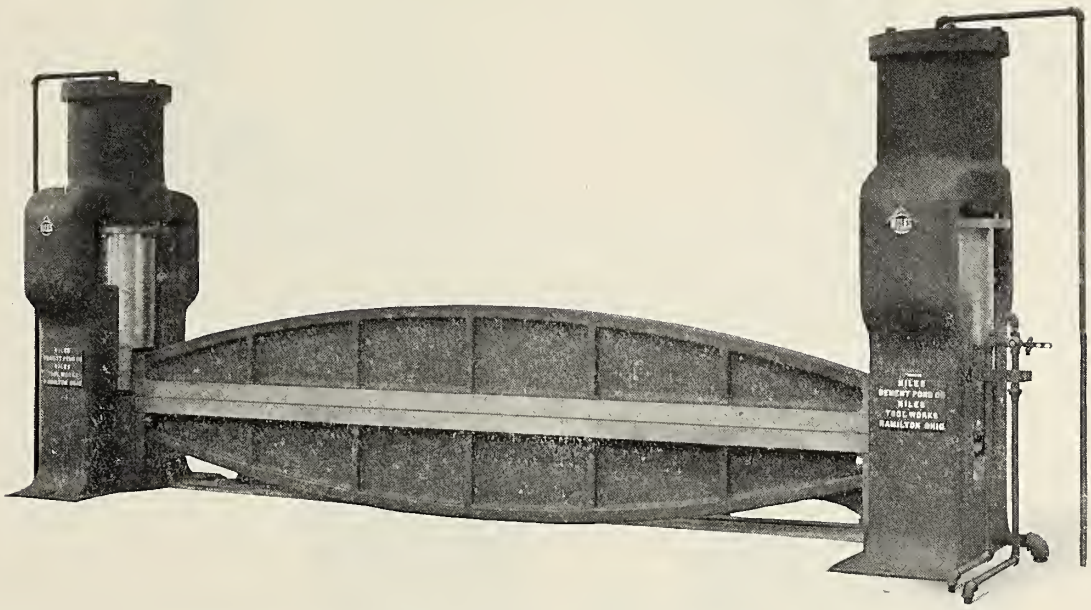

Fig. 2380—Niles Pneumatic Flanging Clamp; Niles-Bement-Pond Company.

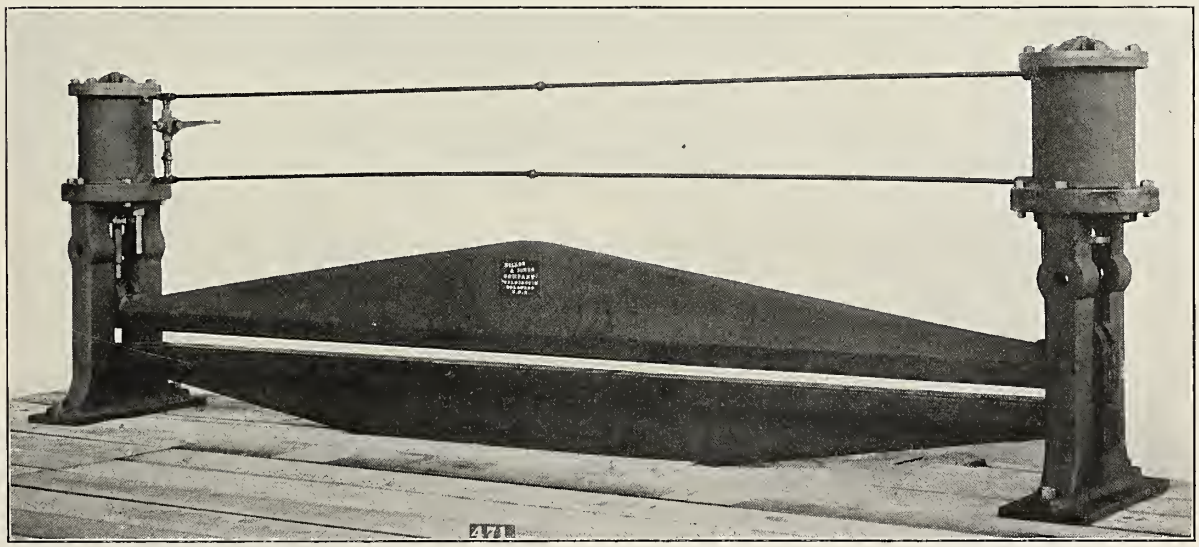

Fig. 2381—Flanging Clamp; Hilles & Jones Company.

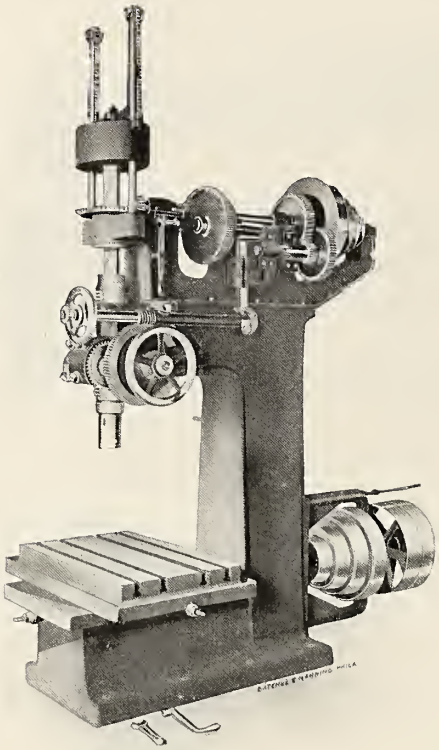

Fig. 2382—48 in. Heavy Upright Drill; Edwin Harrington, Son & Company.

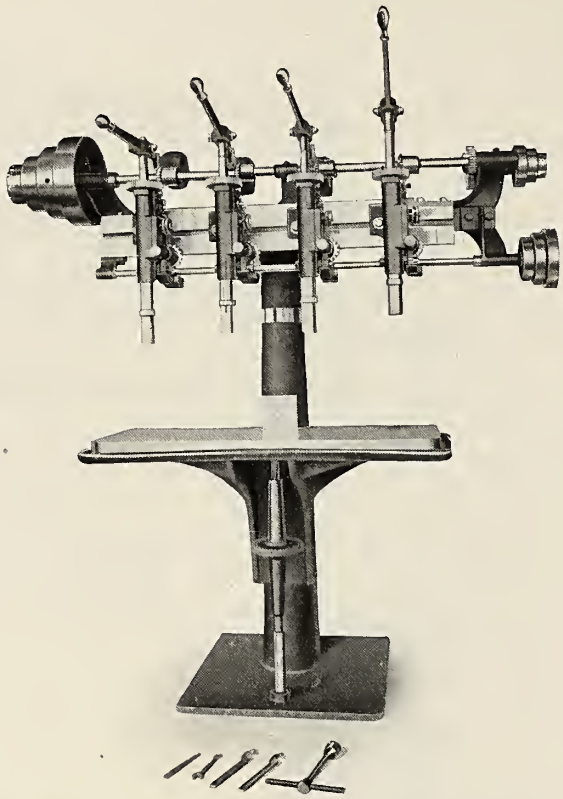

Fig. 2383—No. 1 Multiple Drill; Edwin Harrington, Son & Company.

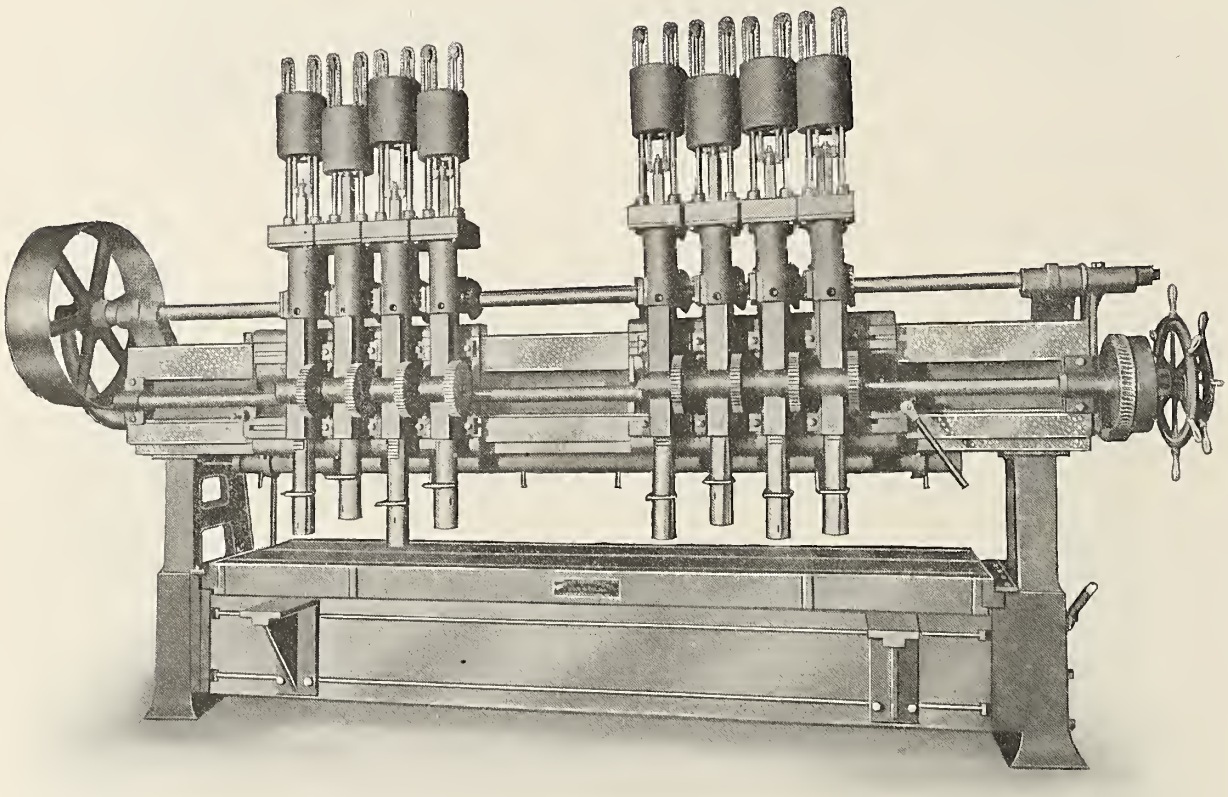

Fig. 2384—No. 10-D Multiple Drill; Edwin Harrington, Son & Company.

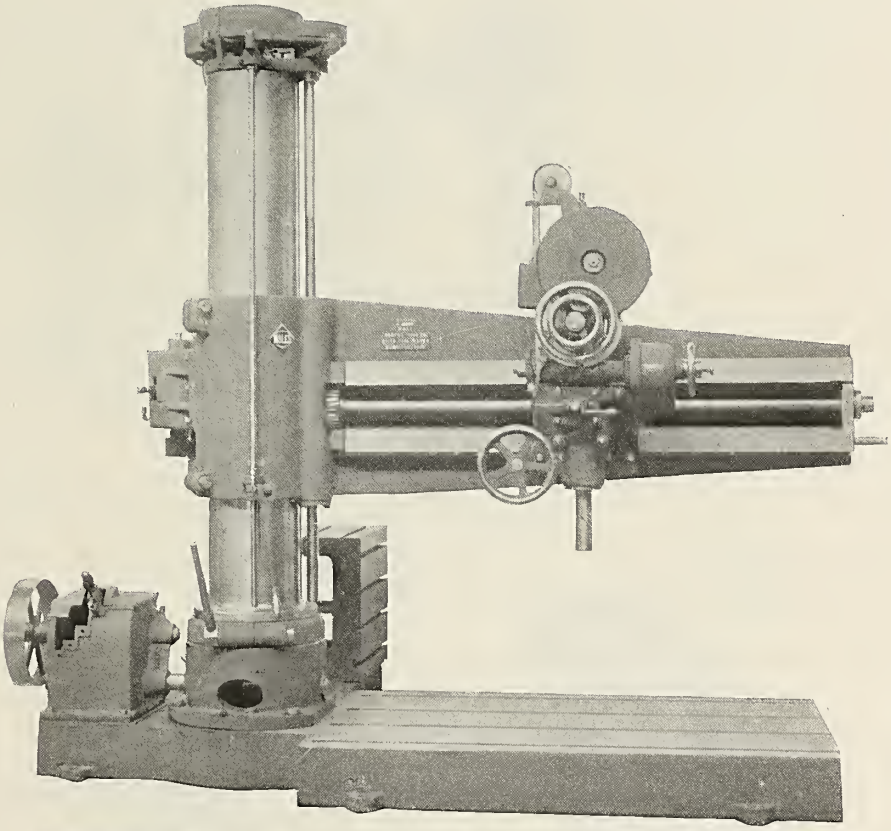

Fig. 2385—Niles Semi-Universal Radial Drill; Niles-Bement-Pond Company.

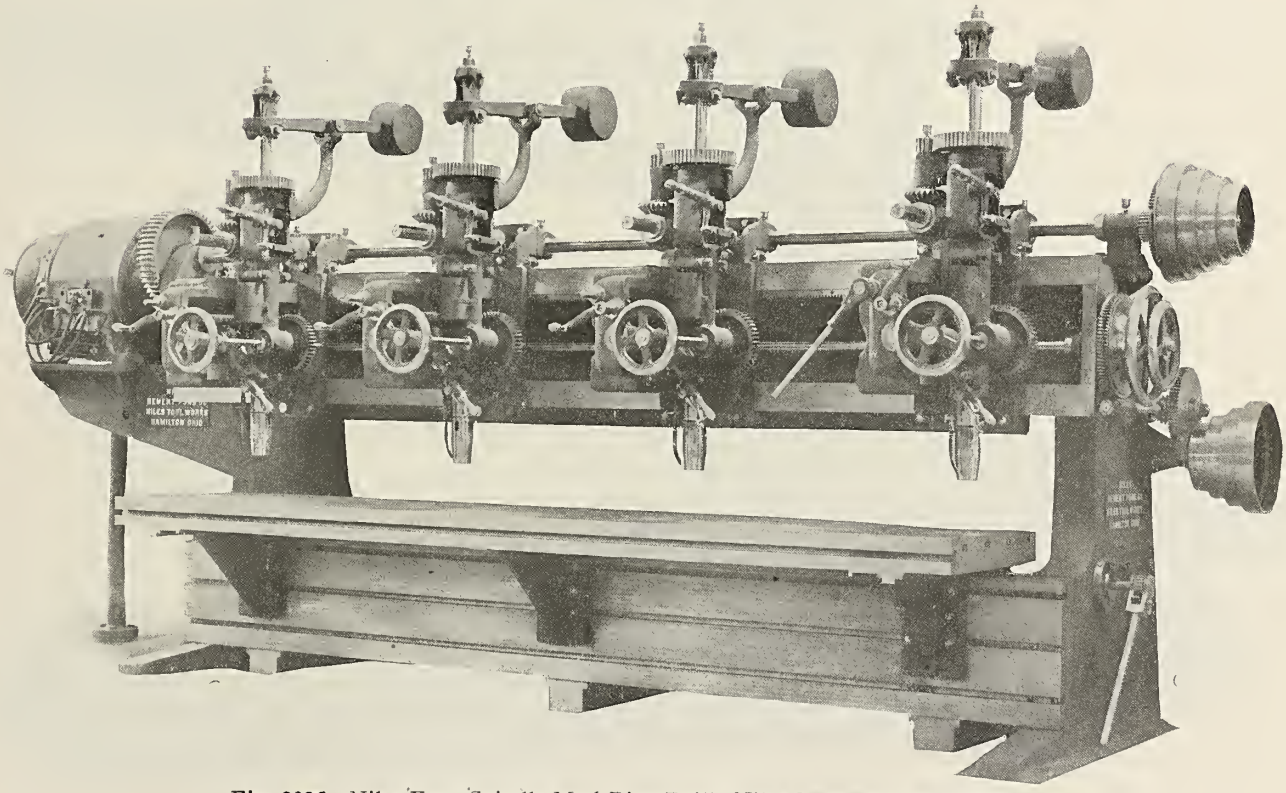

Fig. 2386—Niles Four Spindle Mud Ring Drill; Niles-Bement-Pond Company.

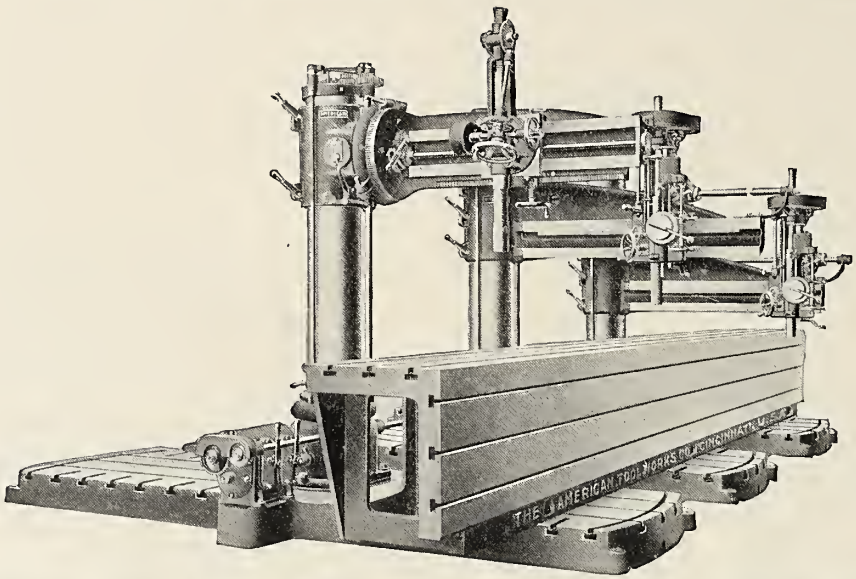

Fig. 2387—Locomotive Frame Drilling Machine Consisting of One 6 ft. Full Universal Radial Drill and Two 6 ft. Plain Radial Drills; American Tool Works Company.

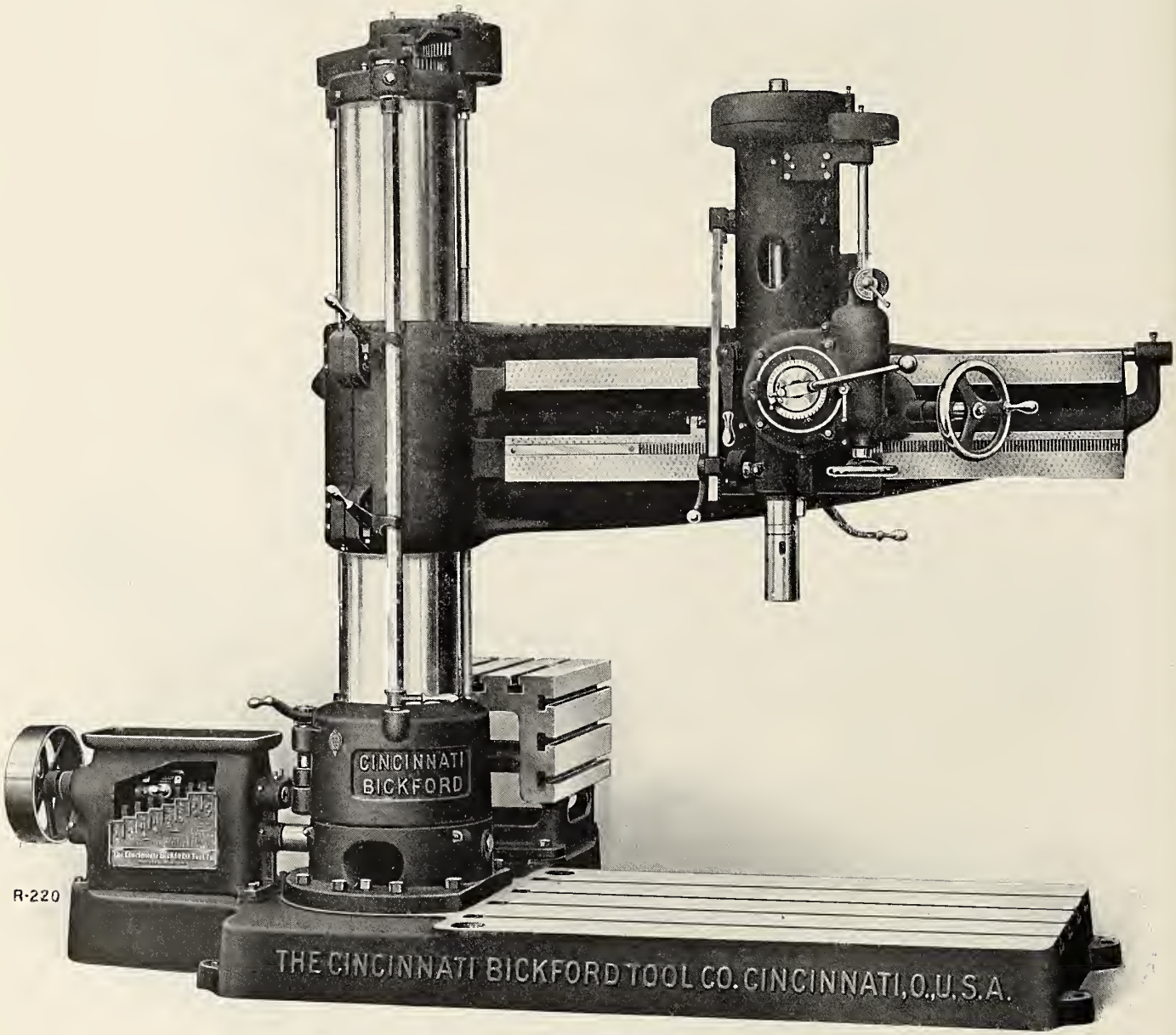

Fig. 2388—Radial Drill; Cincinnati Bickford Tool Company.

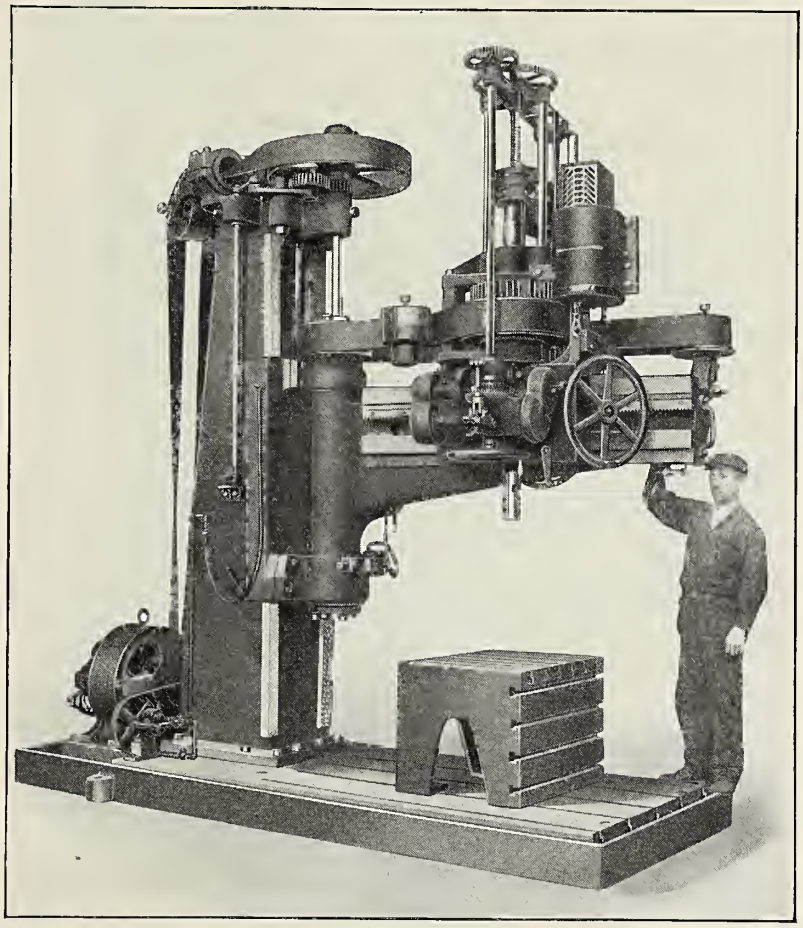

Fig. 2389—60 in. Extra High Power Radial Drill; William Sellers & Company, Inc.

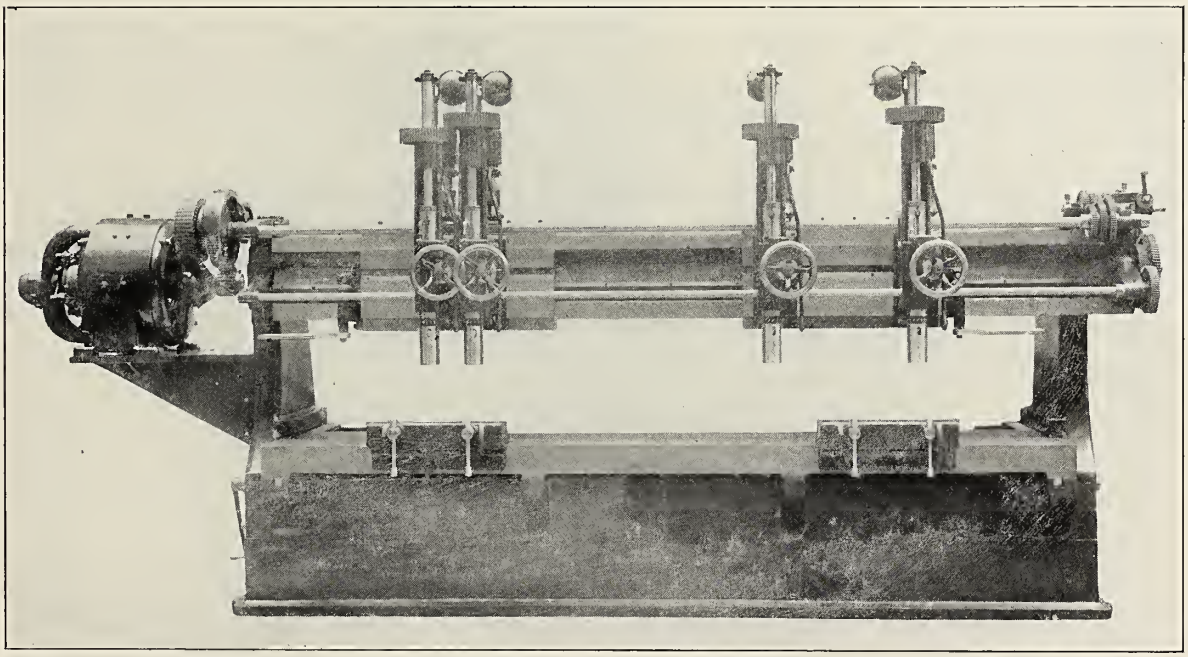

Fig. 2390—Four Spindle Motor Driven Multiple Drill; Foote-Burt Company.

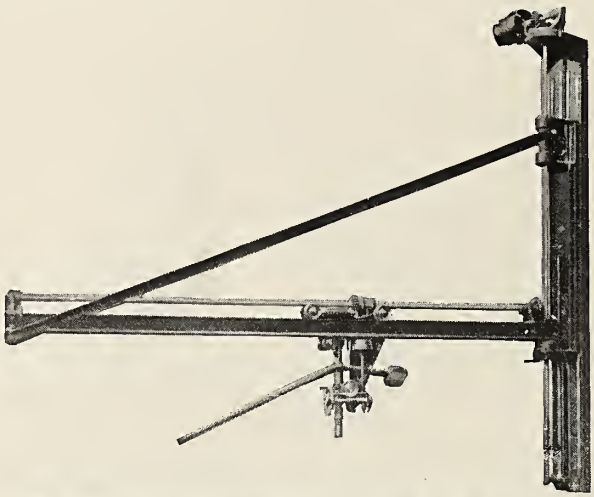

Fig 2391—Wall Radial Drill; Joseph T. Ryerson & Son.

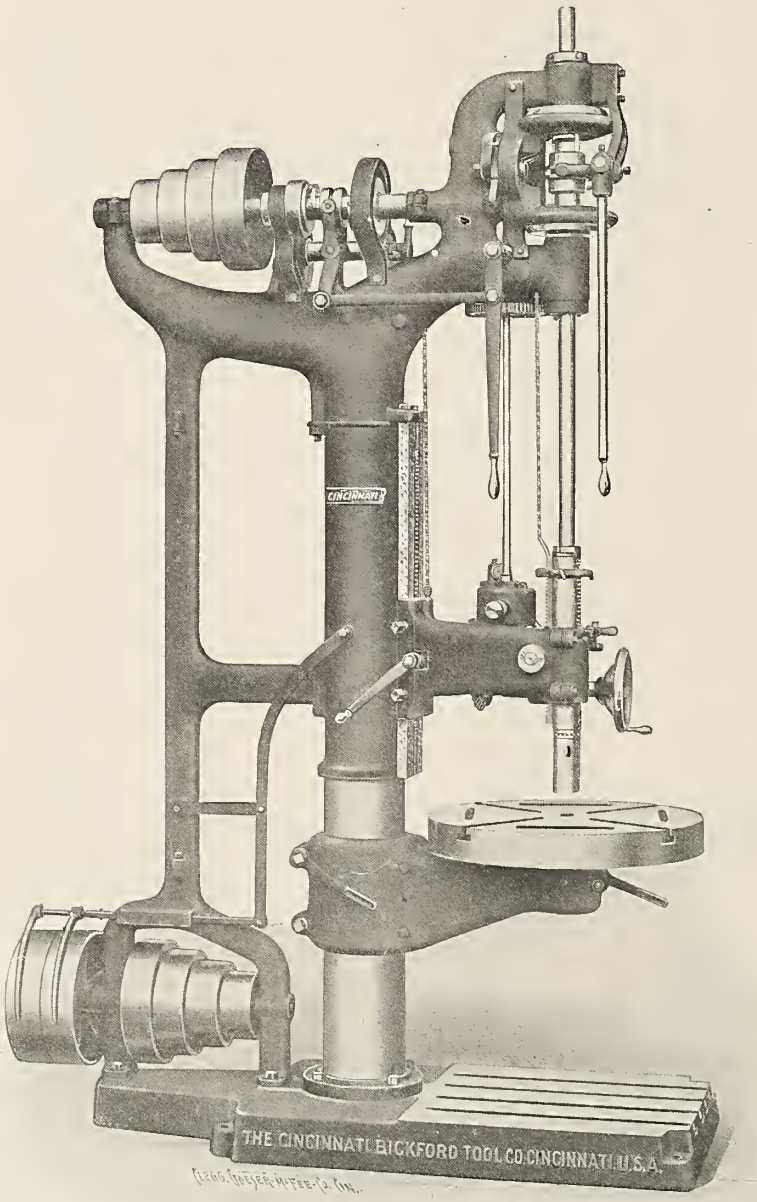

Fig. 2392—Upright Drill; Cincinnati Bickford Tool Company.

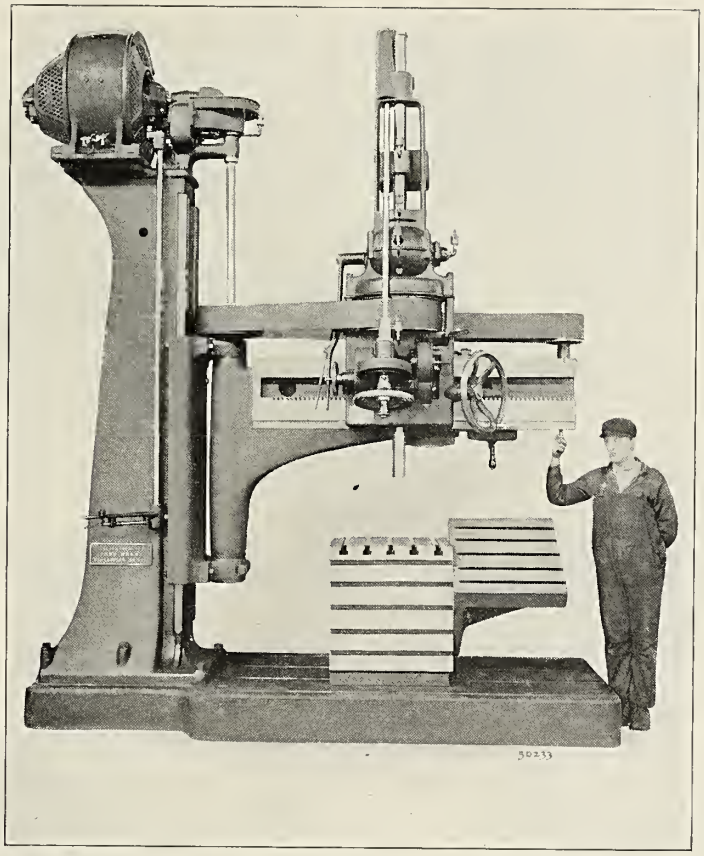

Fig. 2393—Pond Heavy Radial Drill; Niles-Bement-Pond Company.

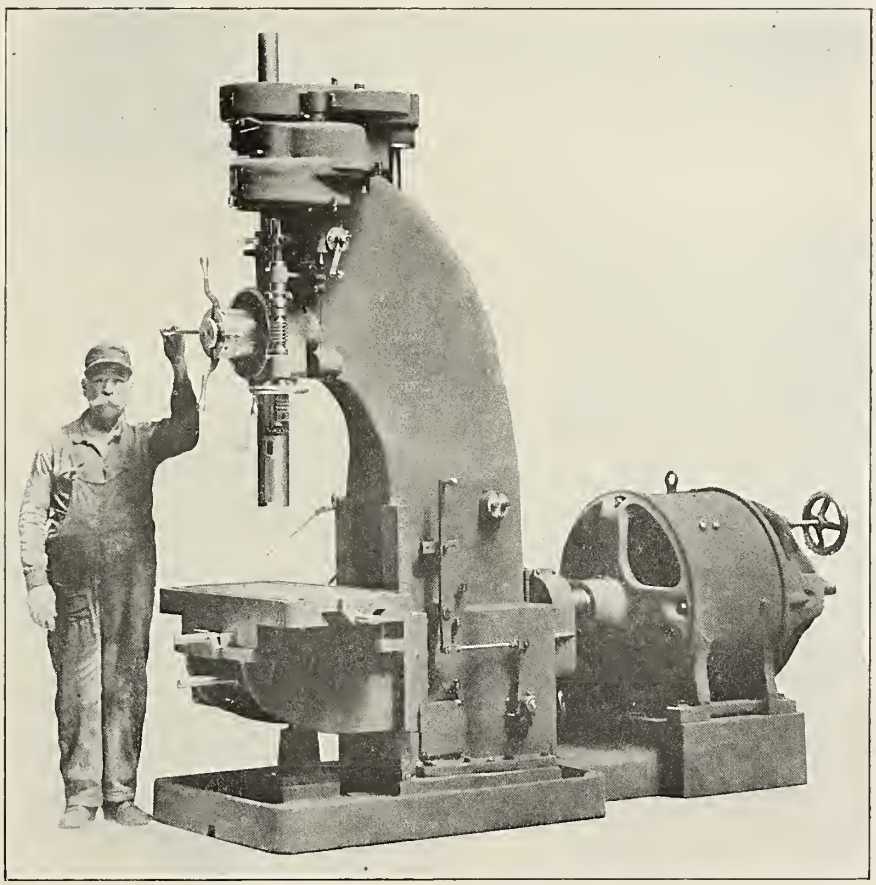

Fig. 2394—Motor Driven Drill Press; Foote-Burt Company.

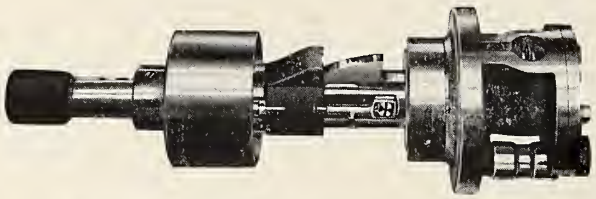

Fig. 2395—Superheater Tube Cutter; Joseph T. Ryerson & Son.

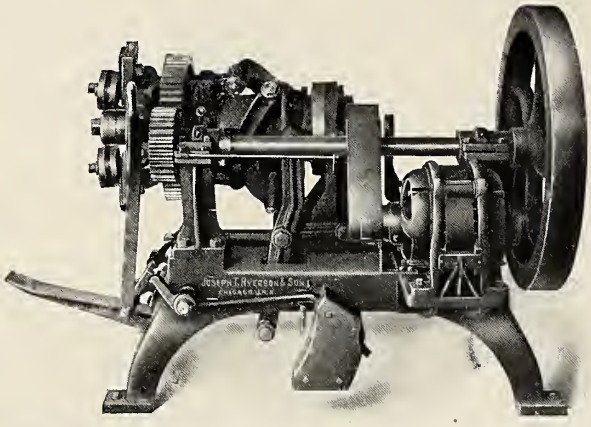

Fig. 2396—Hartz Motor Driven Flue Welder; Joseph T. Ryerson & Son.

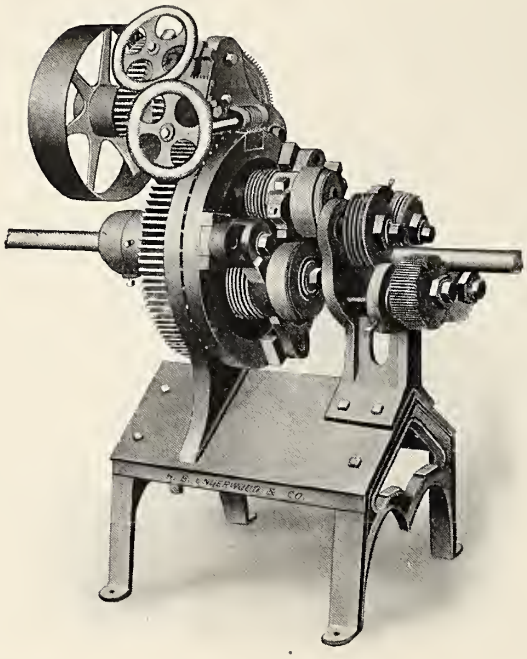

Fig. 2397—Rotary Flue Cleaning Machine; H. B. Underwood & Company.

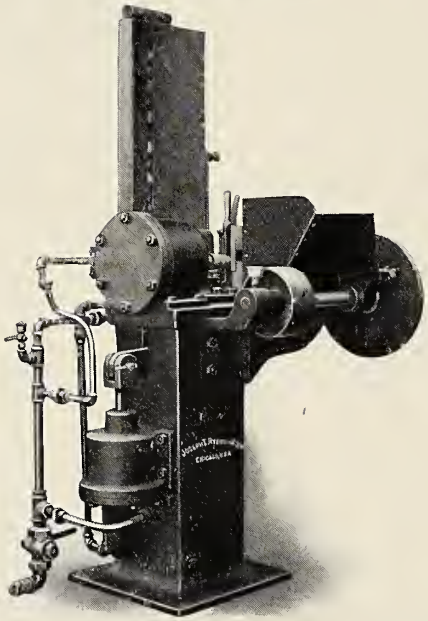

Fig. 2398—Combination Hot Saw and Tube Expanding Machine; Joseph T. Ryerson & Son.

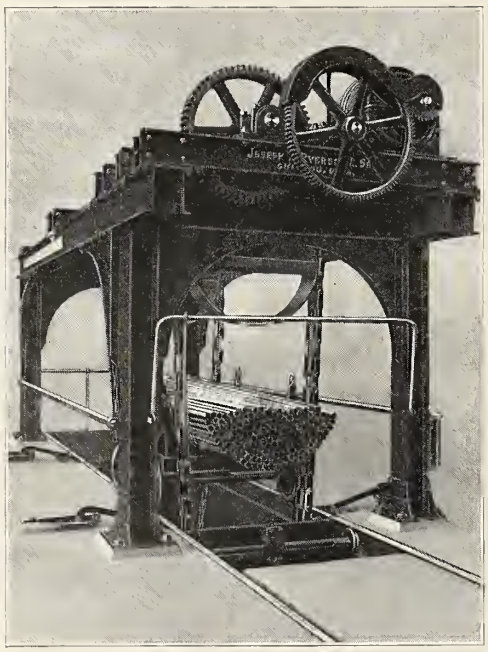

Fig. 2399—Overhead Type Flue Cleaning Machine; Joseph T. Ryerson & Son.

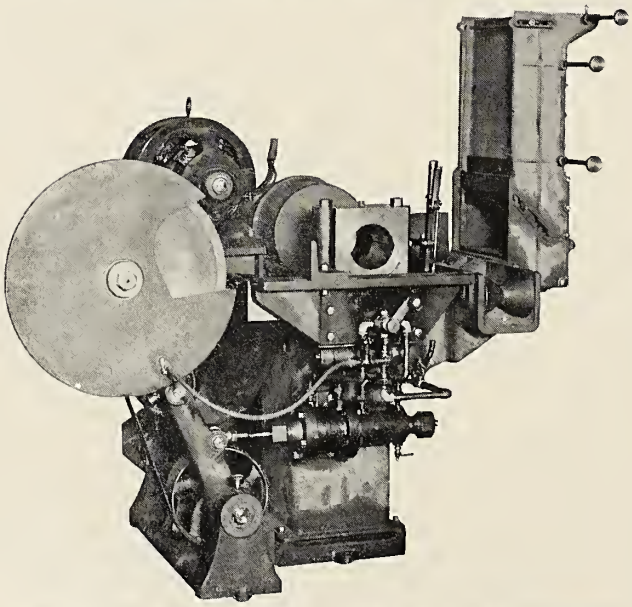

Fig. 2400—Superheater Tube Hot Saw and Expander; Joseph T. Ryerson & Son.

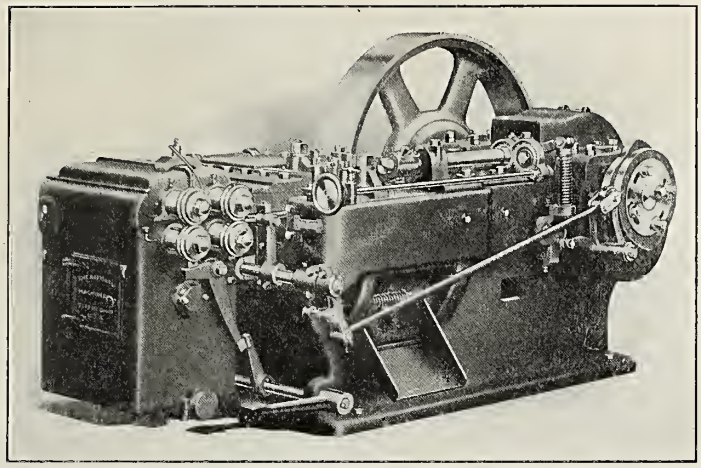

Fig. 2401—Bolt Header with Automatic Feed Rolls; National Machinery Company.

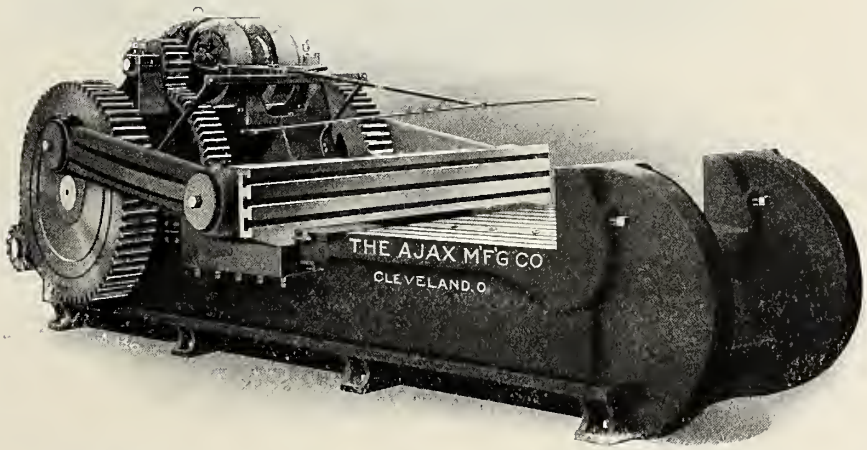

Fig. 2402—No. 12 Standard Bulldozer; Ajax Manufacturing Company.

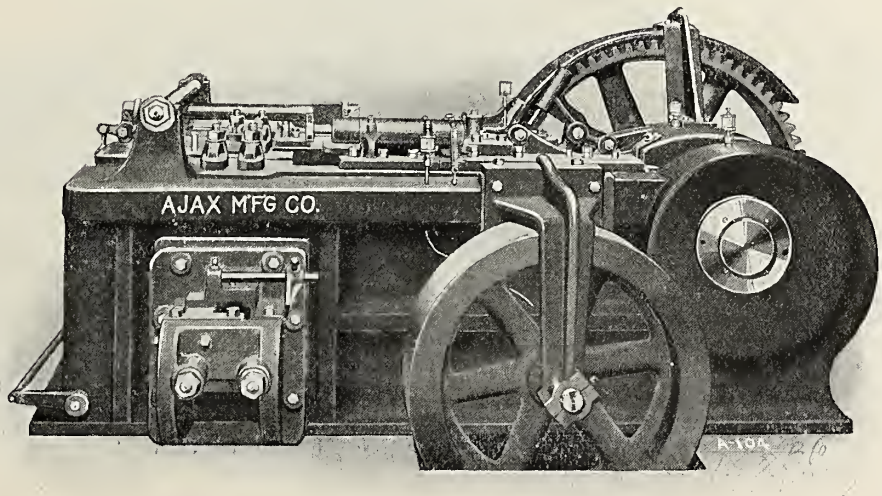

Fig. 2403—Belt Driven 3½ in. Bolt Heading, Upsetting and Forging Machine; Ajax Manufacturing Company.

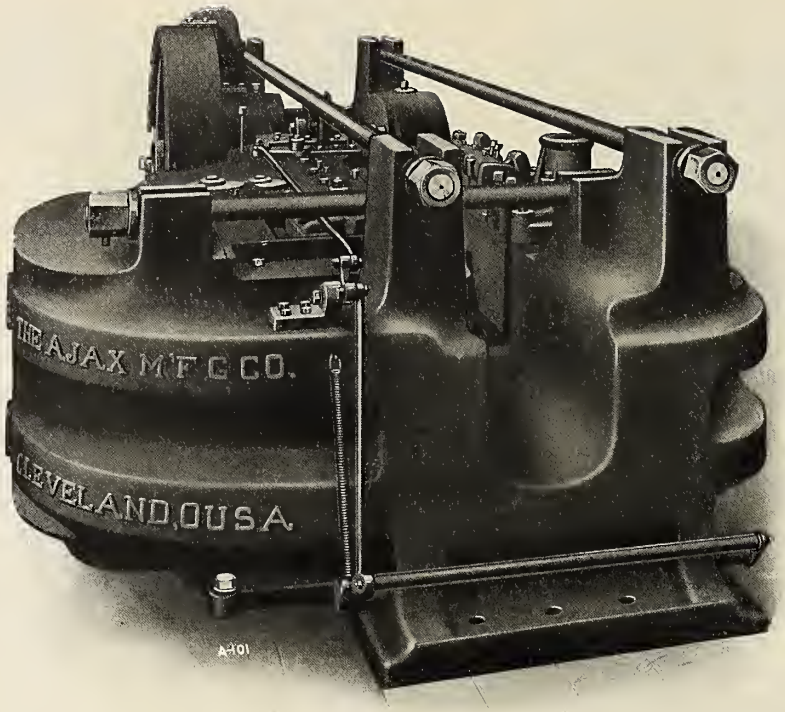

Fig. 2404—Belt Driven 6 in. Bolt Heading, Upsetting and Forging Machine; Ajax Manufacturing Company.

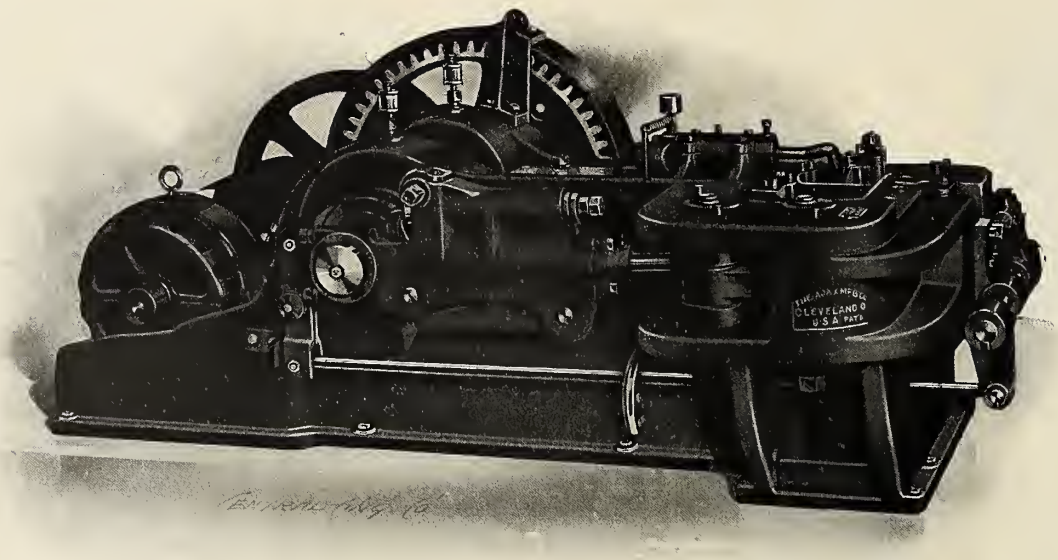

Fig. 2405—Motor Driven Continuous Motion Heading Machine, Hand Feed Type; Ajax Manufacturing Company.

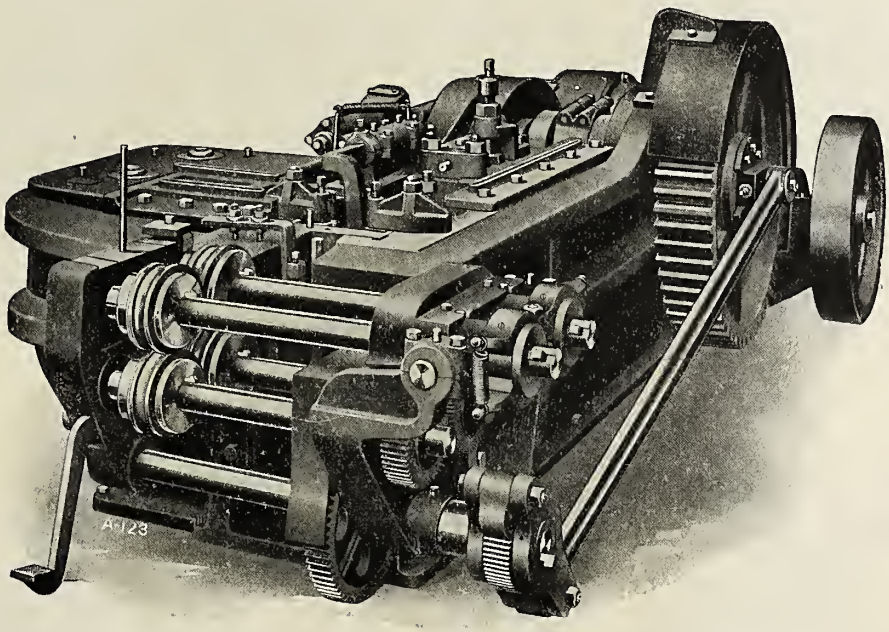

Fig. 2406—Automatic Roll Feed Header; Ajax Manufacturing Company.

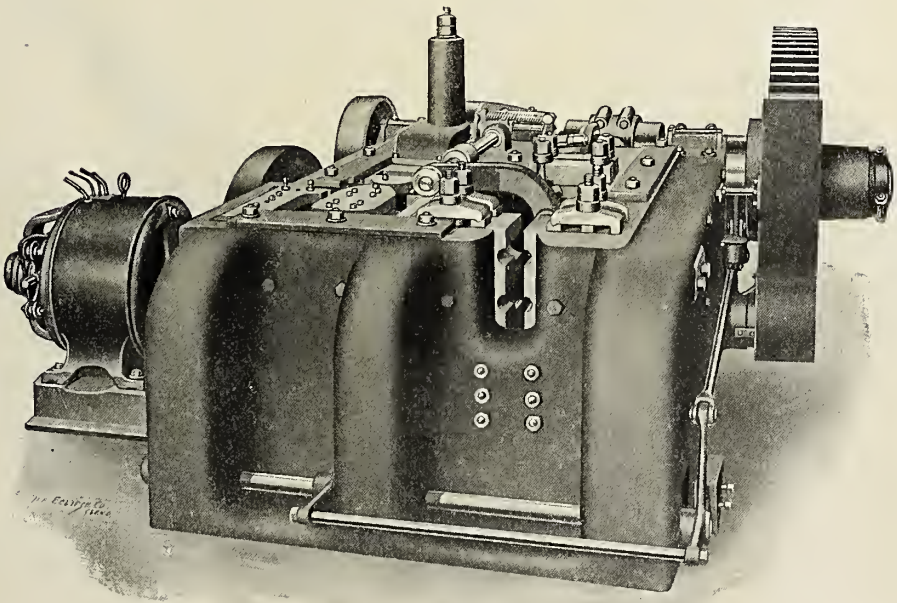

Fig. 2407—Heading and Forging Machine; Acme Machinery Company.

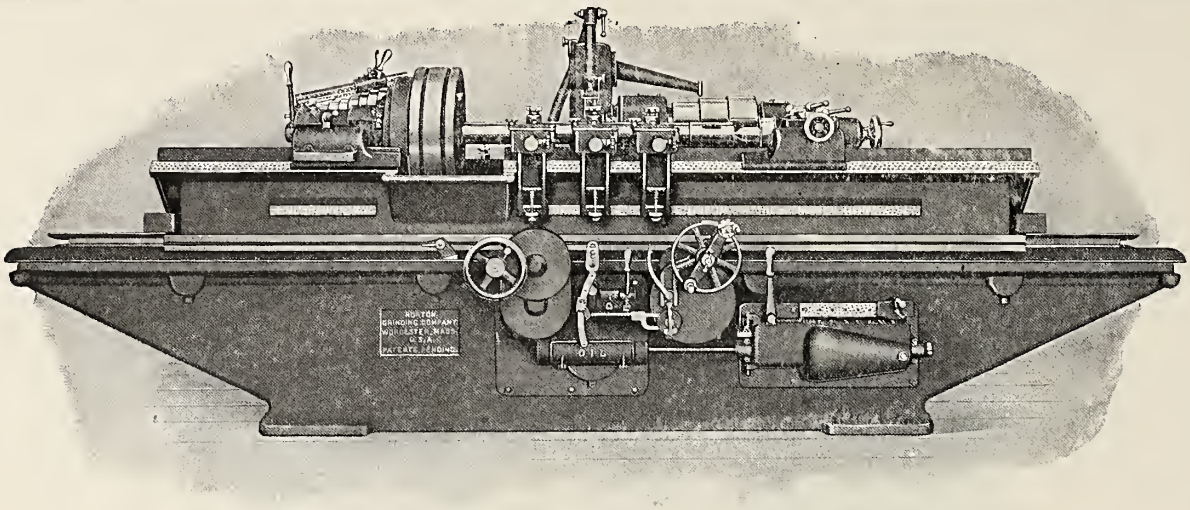

Fig. 2408—Gap Grinding Machine, 18 in.; Norton Grinding Company.

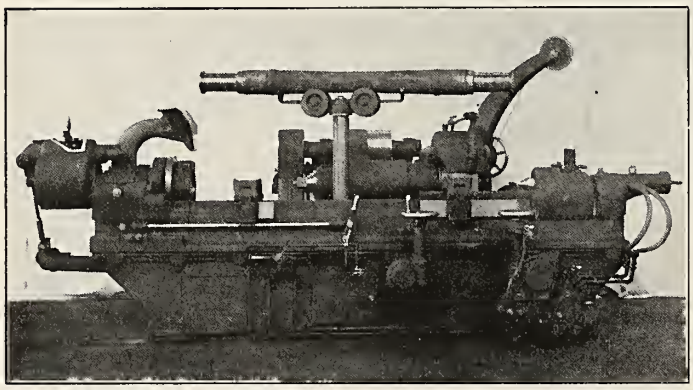

Fig. 2409—Axle Raised Preparatory to Reversing in Grinder; Norton Grinding Company.

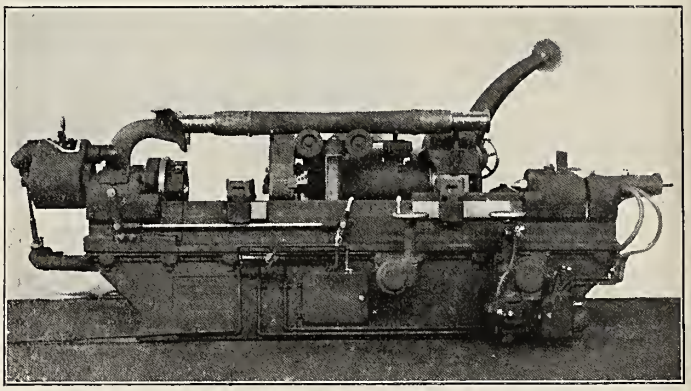

Fig 2410—Axle Being Lowered in Grinding Machine After Reversal; Norton Grinding Company.

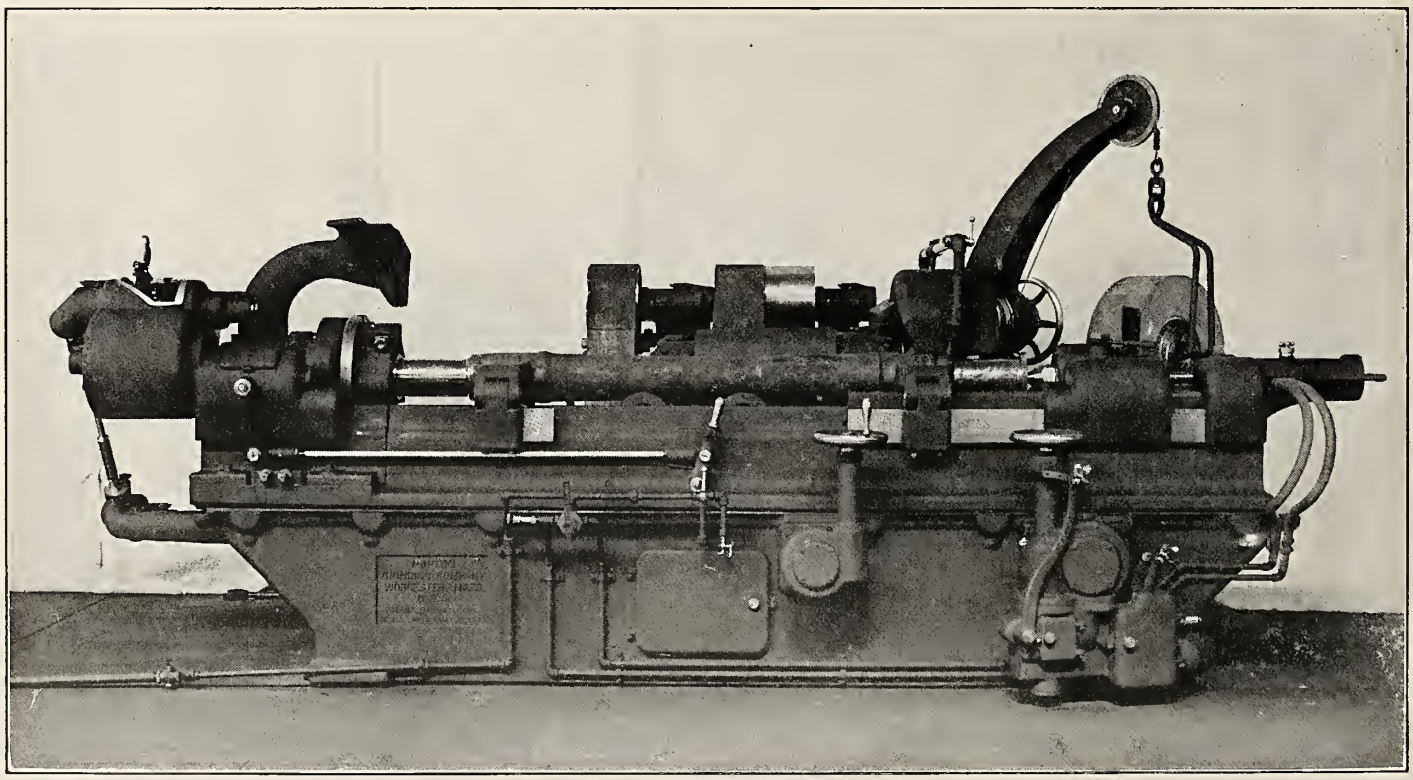

Fig. 2411—Axle Grinding Machine; Norton Grinding Company.

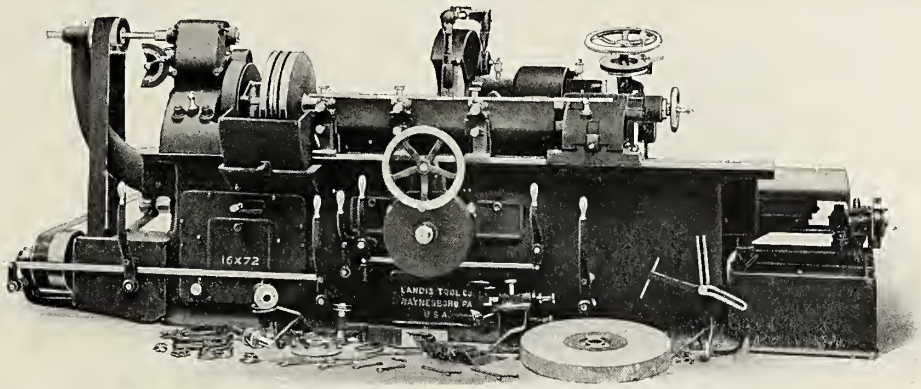

Fig. 2412—Gap Grinder, 16 in. x 72 in.; Landis Tool Company.

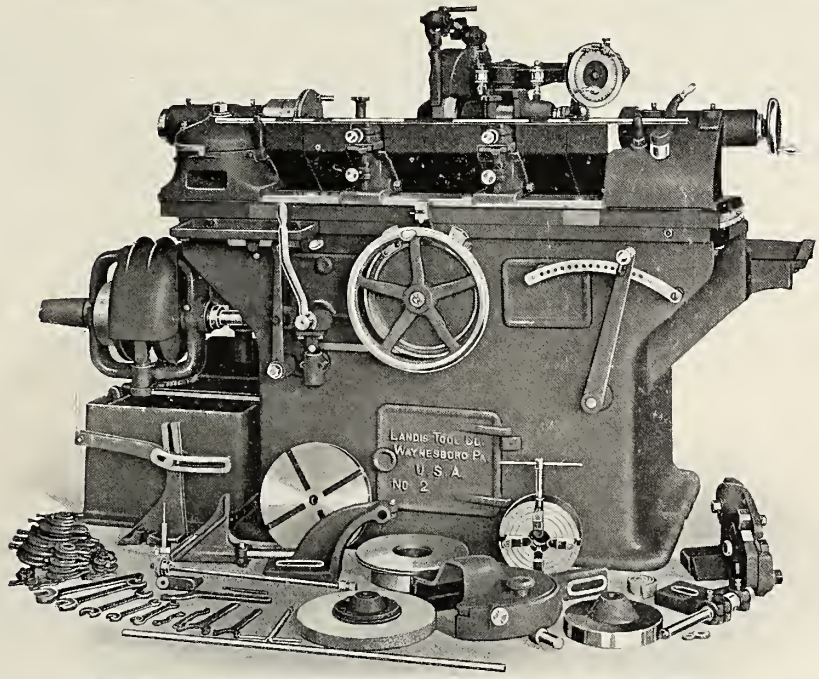

Fig. 2413—No. 2 Universal Grinder; Landis Tool Company.

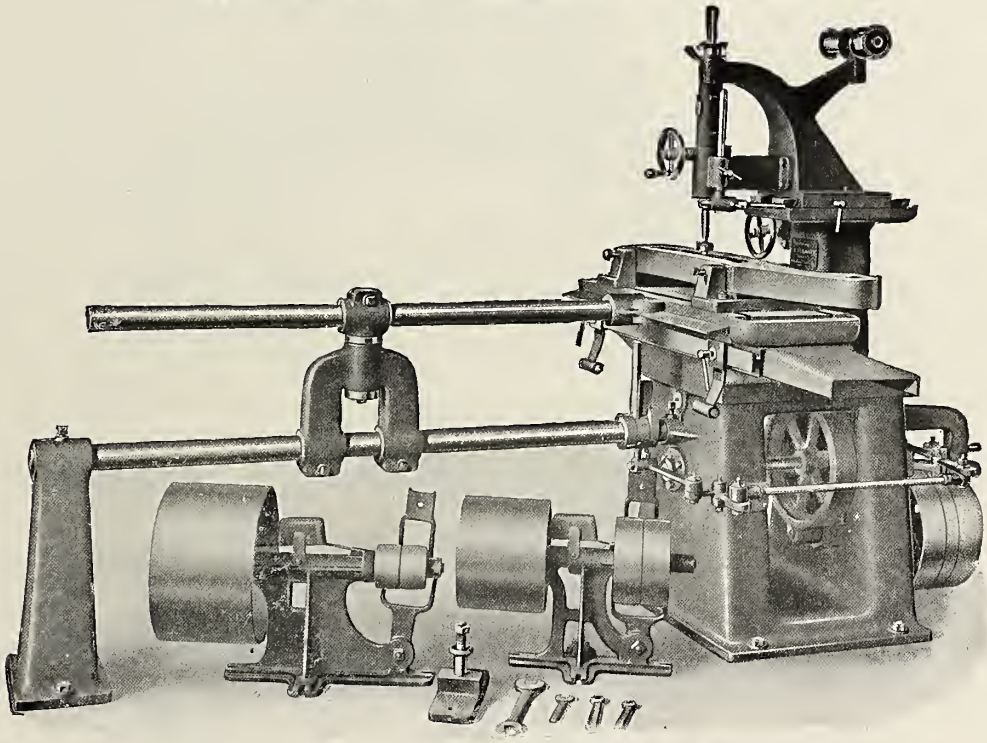

Fig. 2414—Belt Driven Radius Grinder; H. G. Hammett.

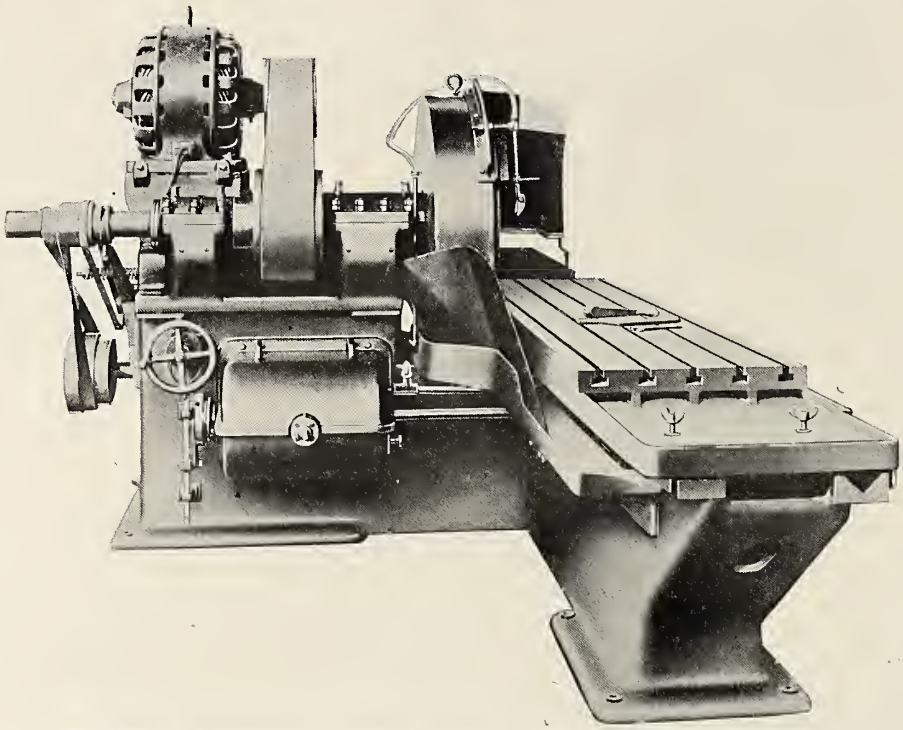

Fig. 2415—Heavy Face Grinding Machine; Diamond Machine Company.

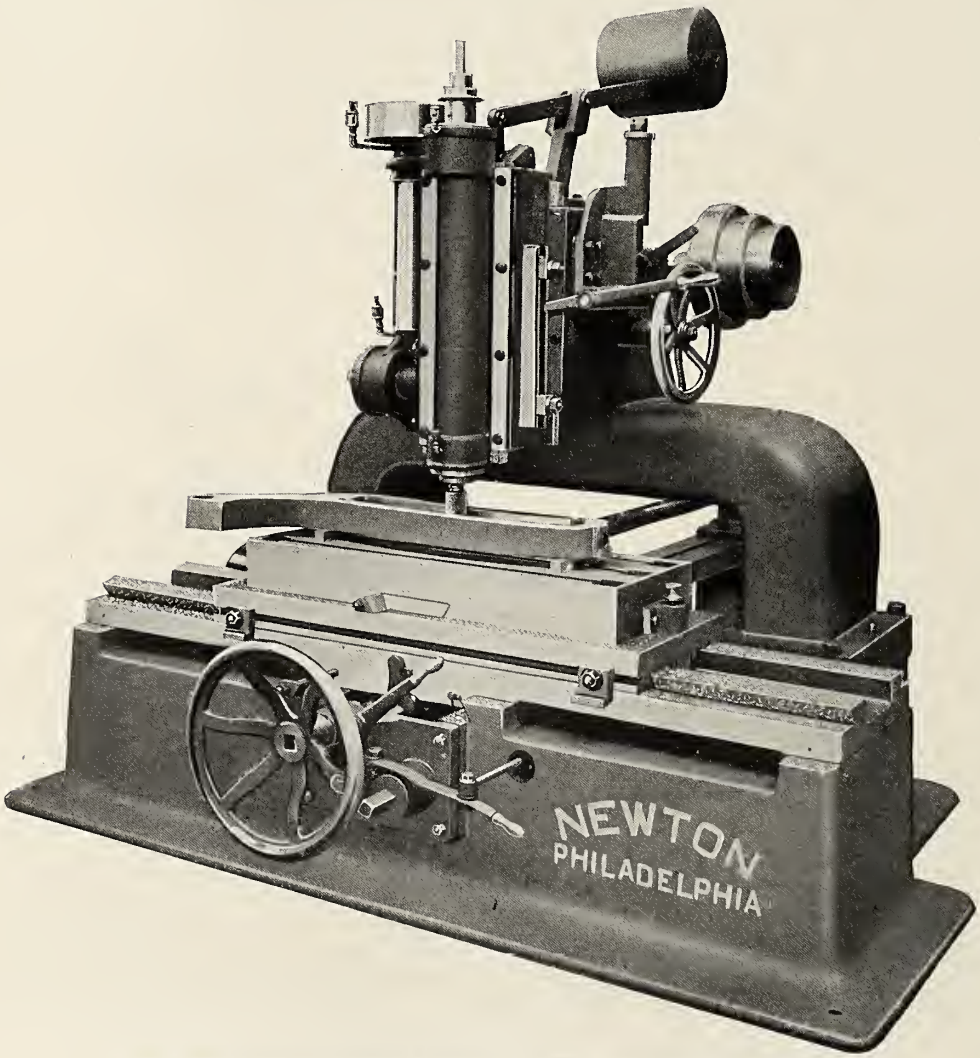

Fig. 2416—Link Grinding Machine; Newton Machine Tool Works.

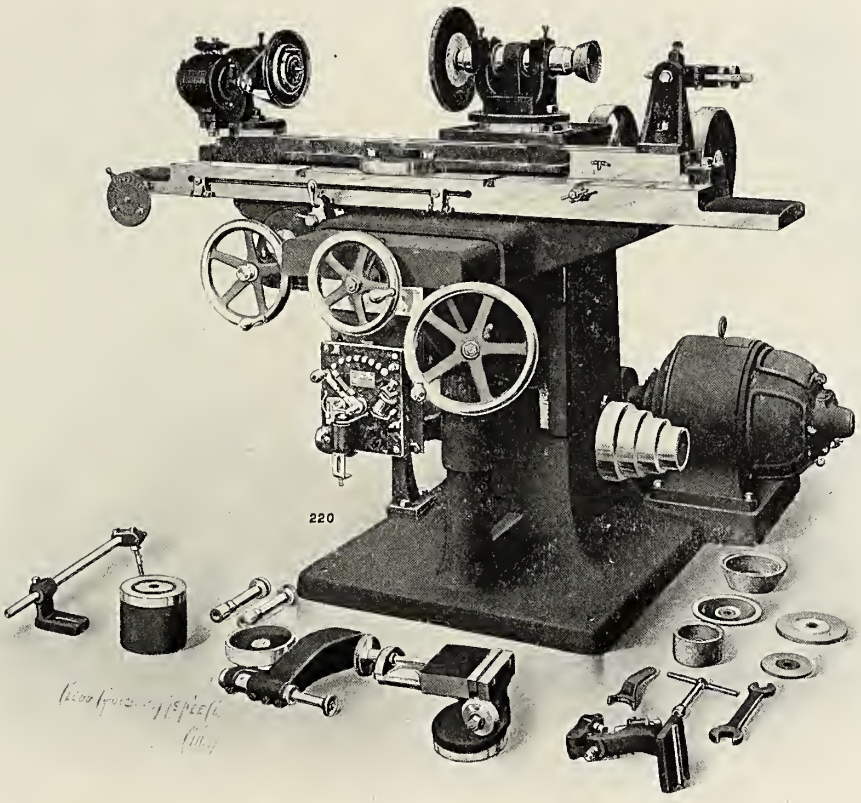

Fig. 2417—Universal Cutter Grinder; Cincinnati Milling Machine Company.

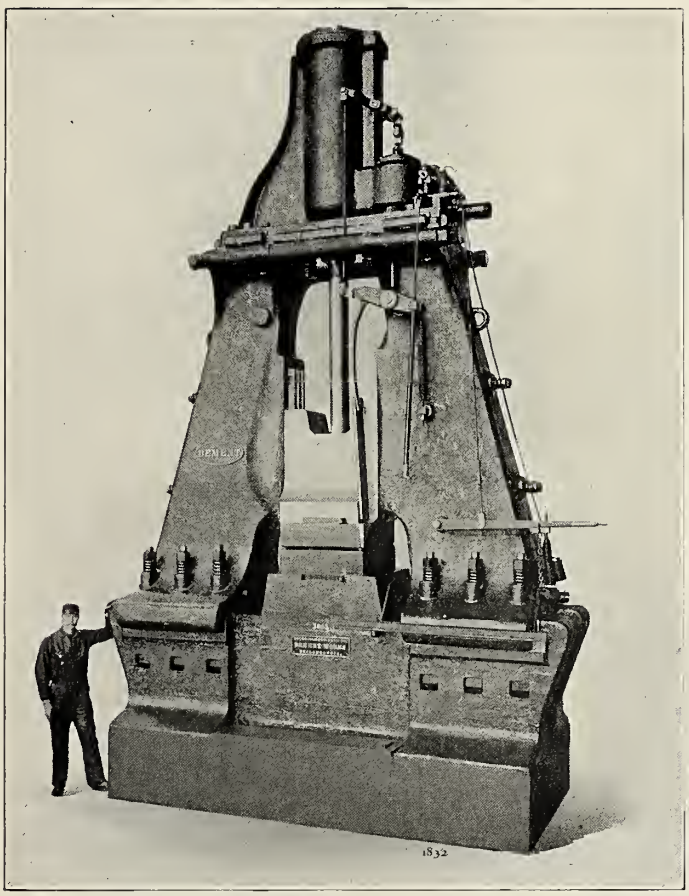

Fig. 2418—Bement 12,000 lb. Steam Drop Hammer; Niles-Bement-Pond Company.

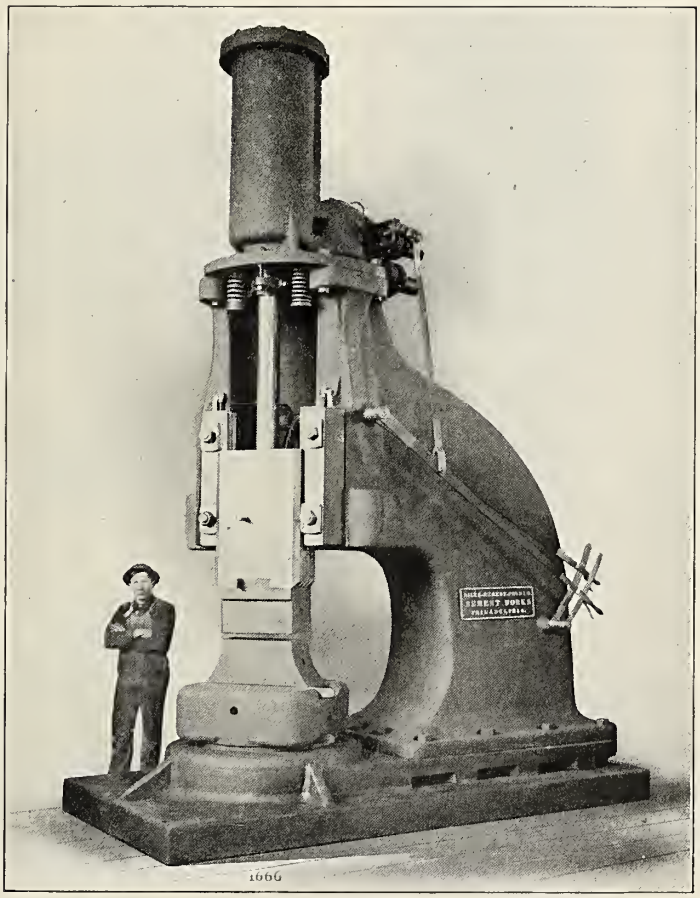

Fig. 2419—Bement 4,000 lb. Single Frame Steam Hammer; Niles-Bement-Pond Company.

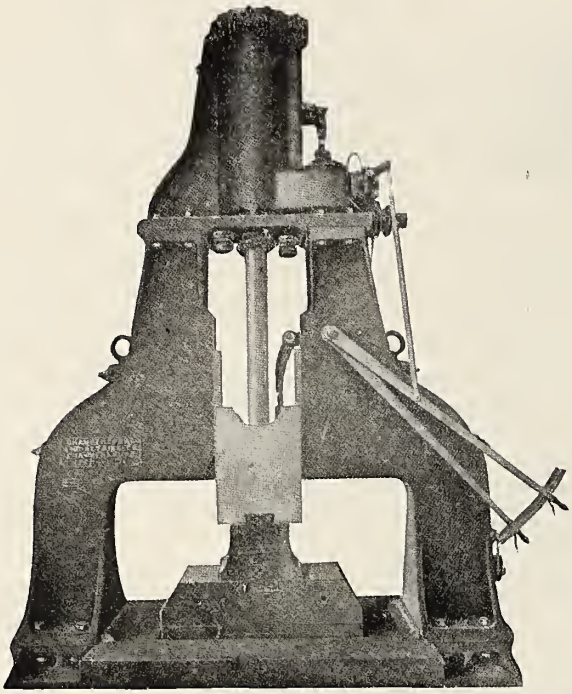

Fig. 2420—Double Frame Steam Hammer; Chambersburg Engineering Company.

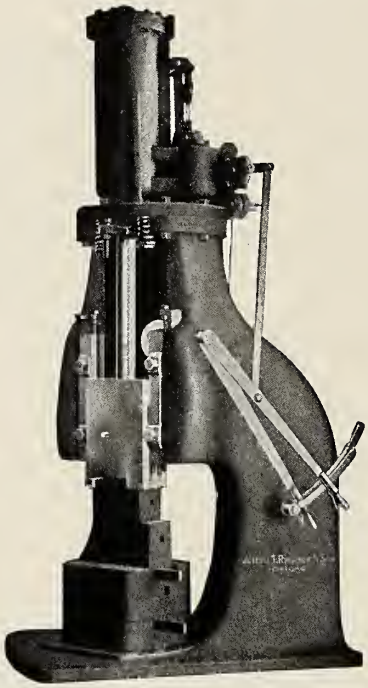

Fig. 2421—Single Frame Hammer; Joseph T. Ryerson & Son.

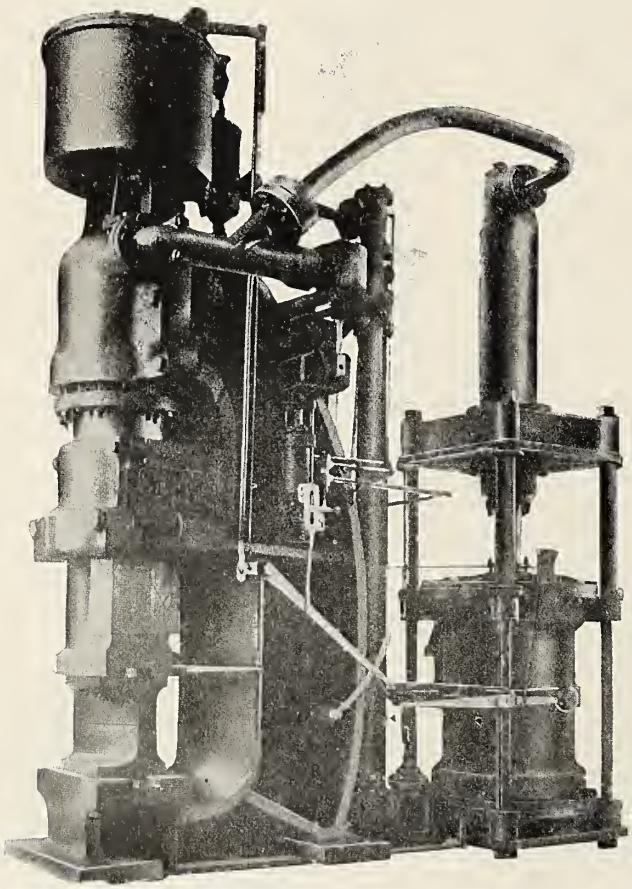

Fig. 2422—Steam Hydraulic Press; Chambersburg Engineering Company.

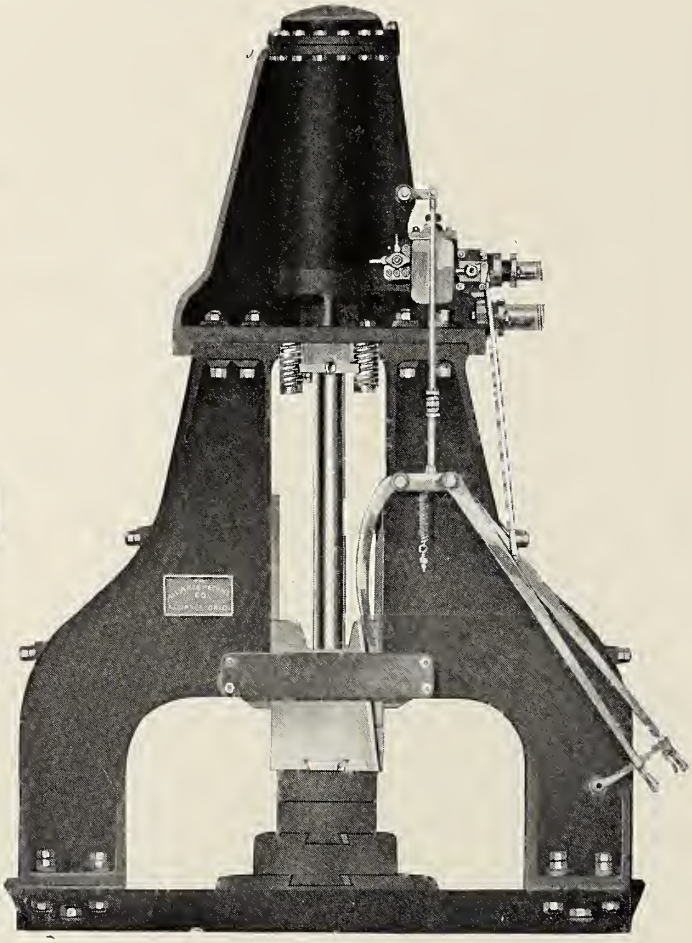

Fig. 2423— Double Frame Steam Hammer; Alliance Machine Company.

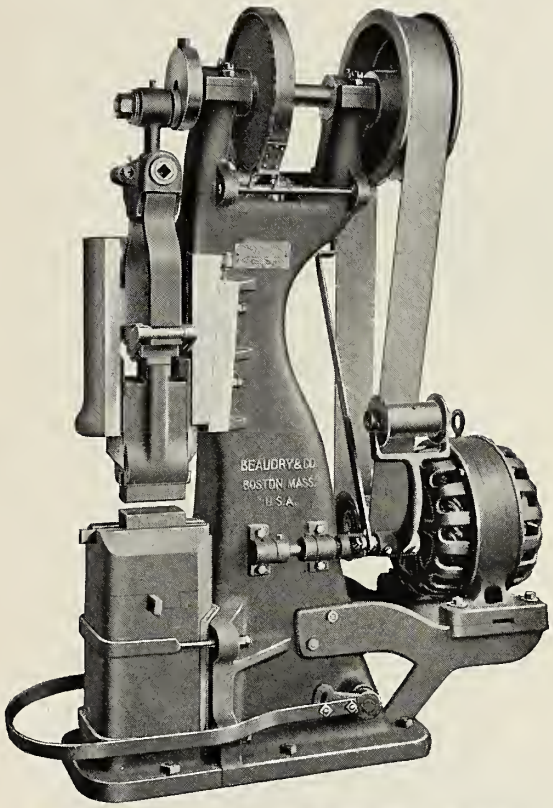

Fig. 2424—Motor Driven Peerless Hammer; Beaudry & Company.

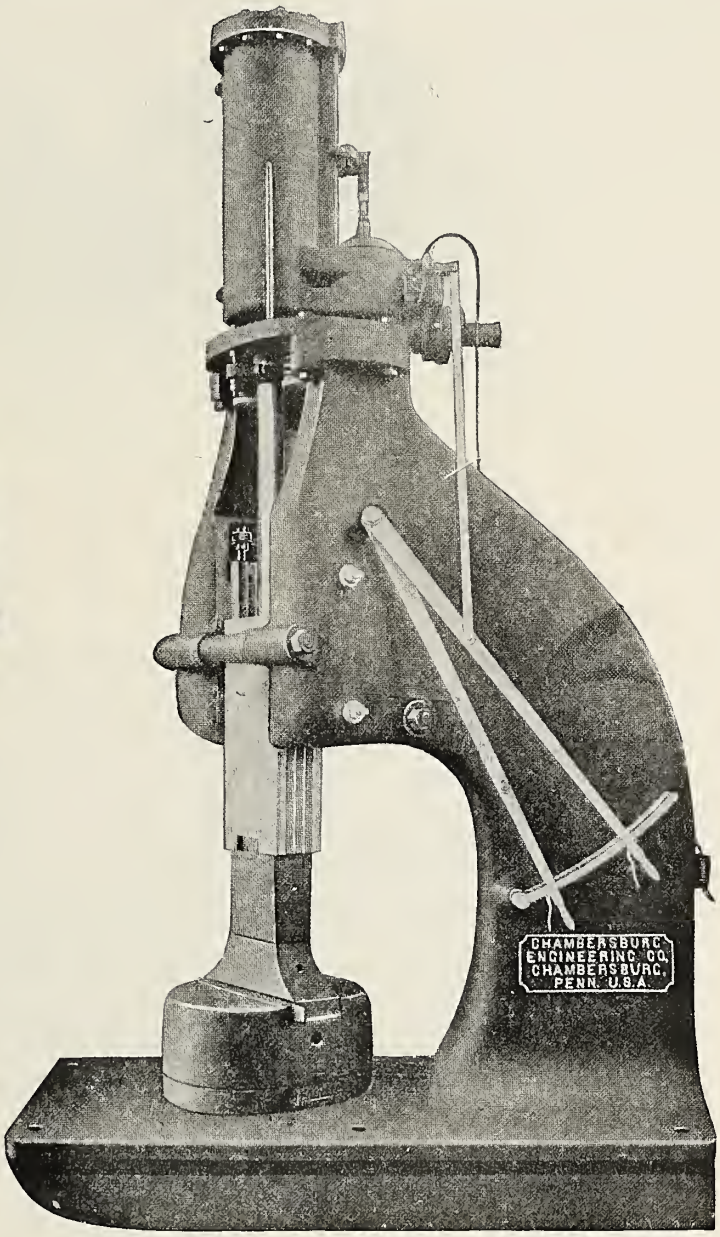

Fig. 2425—Single Frame Steam Hammer; Chambersburg Engineering Company.

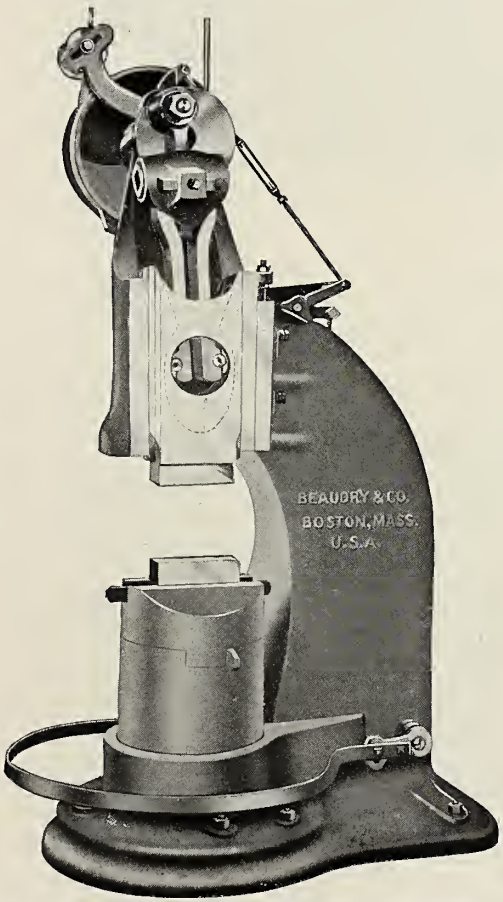

Fig. 2426—Belt Driven Champion Hammer; Beaudry & Company.

Fig. 2427—Axle Key Seating Machine; Newton Machine Tool Works, Inc.

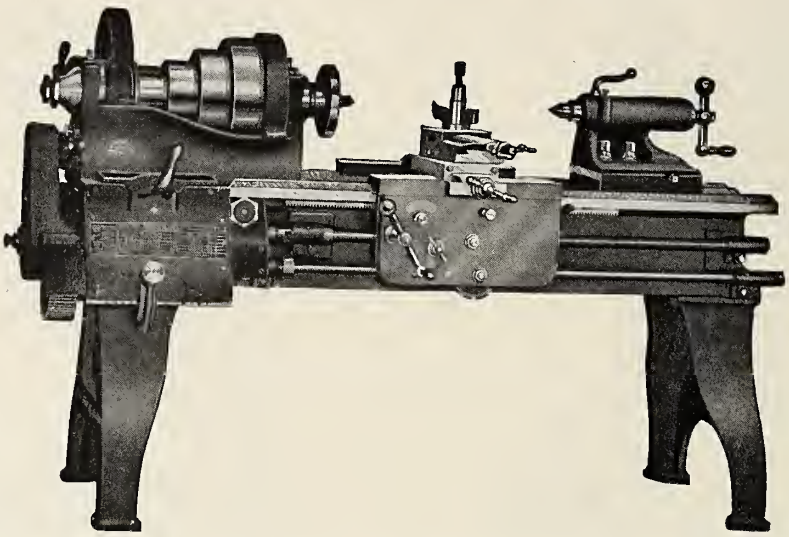

Fig. 2428—Reed 16 in. Quick Change Gear Lathe; Manning, Maxwell & Moore.

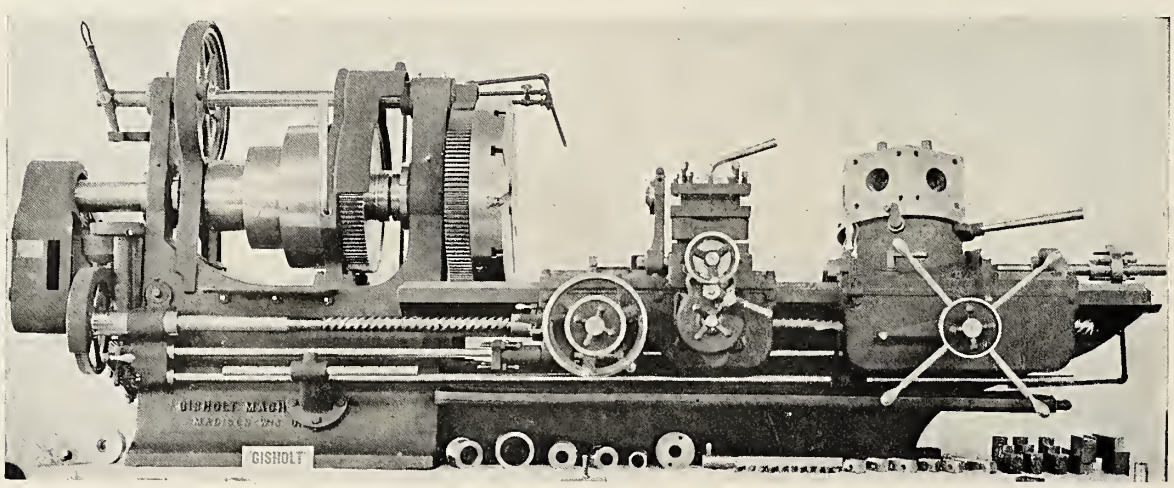

Fig. 2429—Turret Lathe, 34 in.; Gisholt Machine Company.

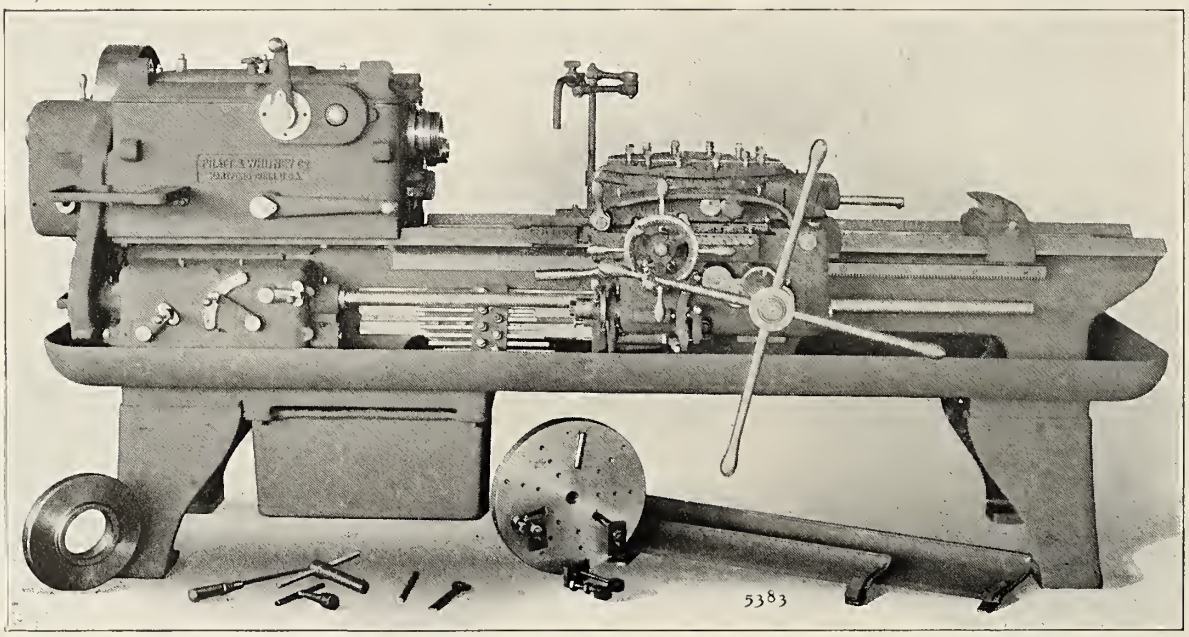

Fig. 2430—Pratt & Whitney 2½ in. x 26 in. Turntable Lathe; Niles-Bement-Pond Company.

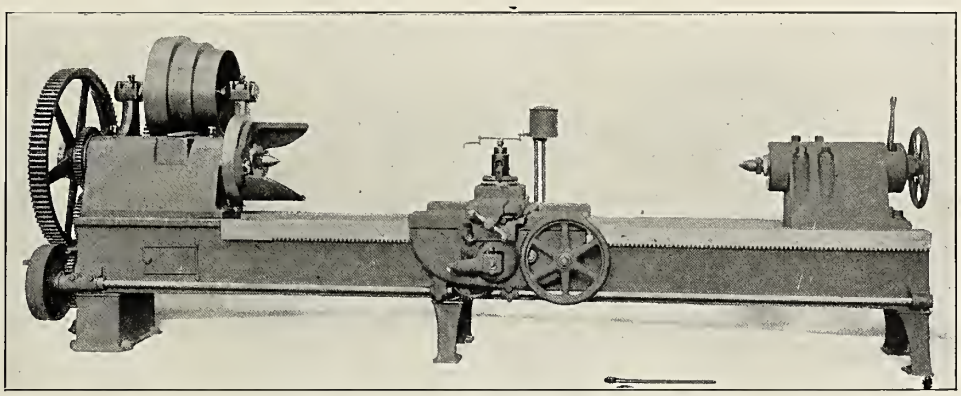

Fig. 2431—Roughing Lathe, 25 in.; William Sellers & Company, Inc.

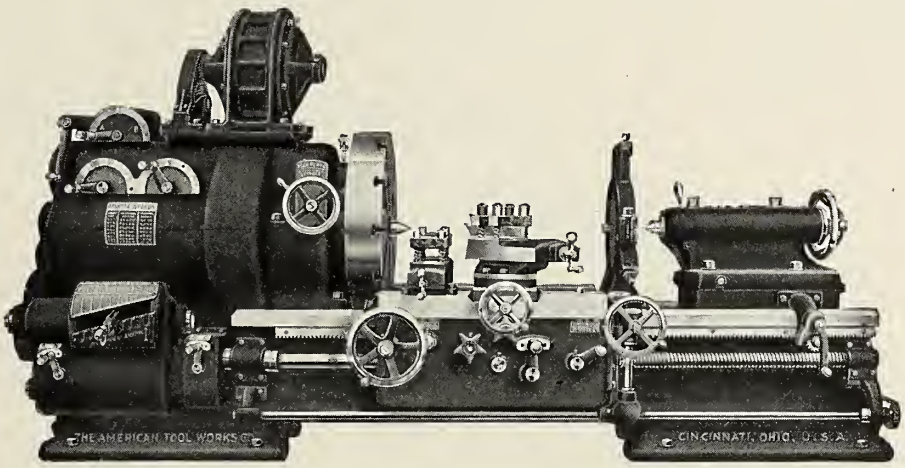

Fig. 2432—High Duty 36 in. Lathe. Motor Driven Through Sixteen-Speed Geared Head; American Tool Works Company.

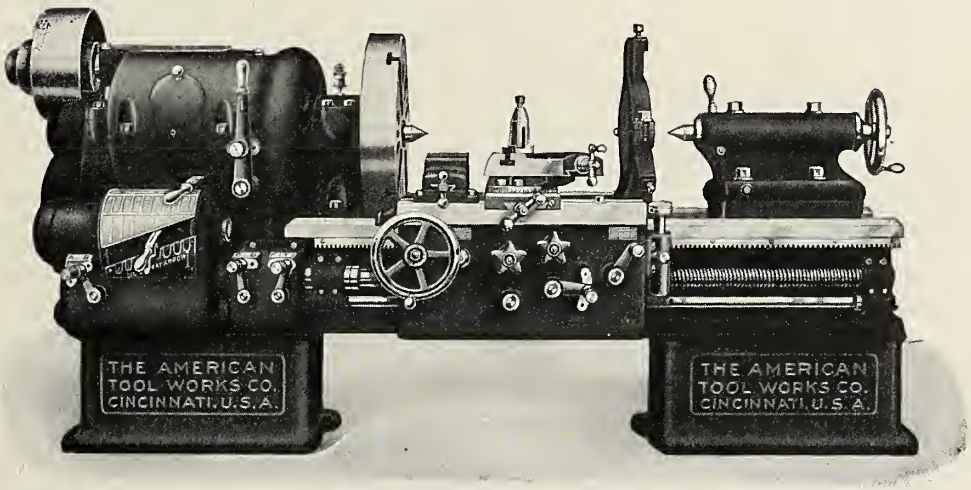

Fig. 2433—High Duty 20 in. Lathe with Patented Four-Speed Head for Belt Drive; American Tool Works Company.

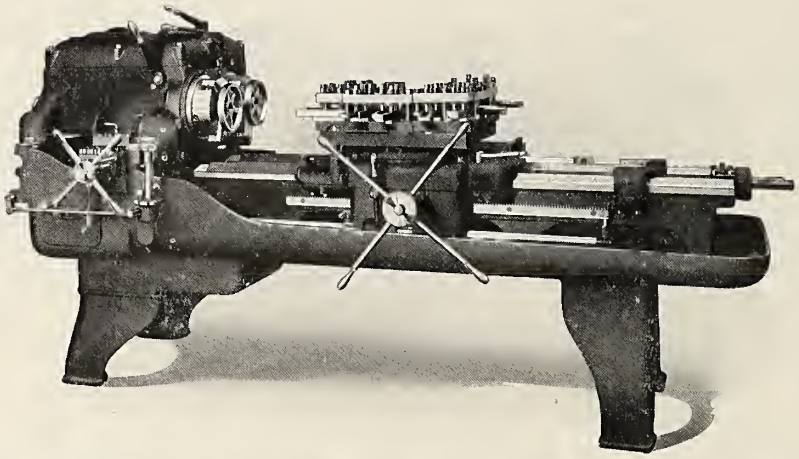

Fig. 2434—Double Spindle Hartness Flat Turret Lathe; Jones & Lamson Machine Company.

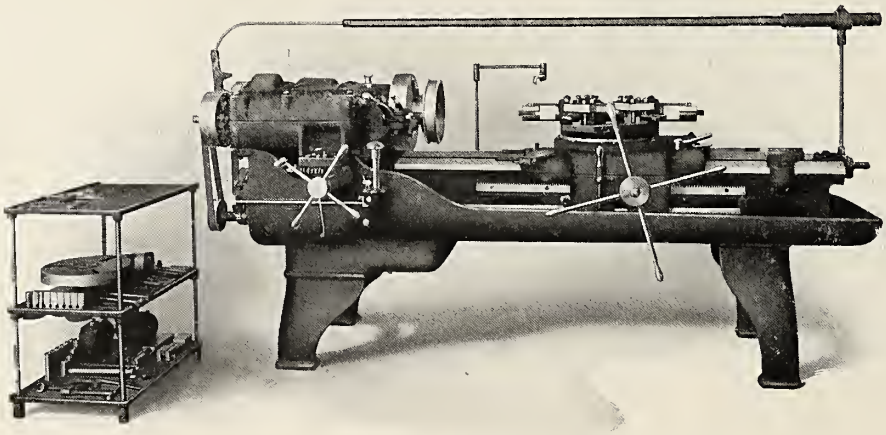

Fig. 2435—Hartness Flat Turret Lathe; Jones & Lamson Machine Company.

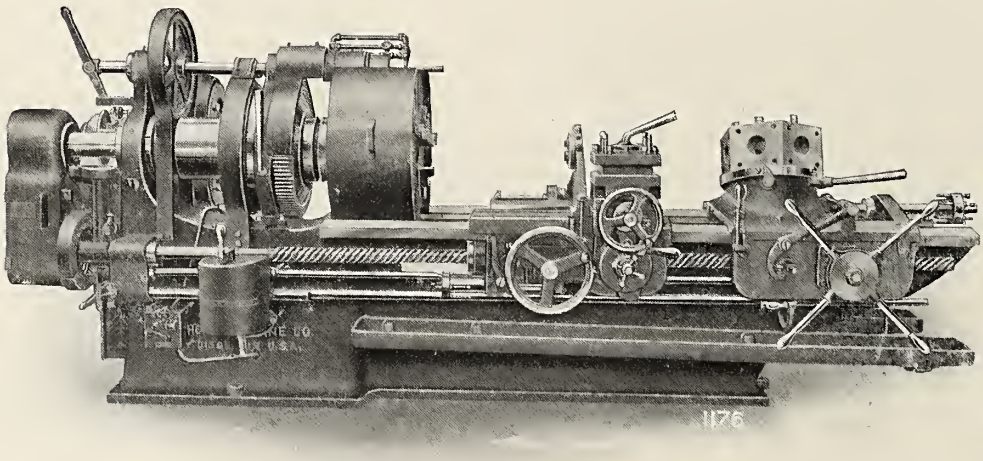

Fig. 2436—Turret Lathe; Gisholt Machine Company.

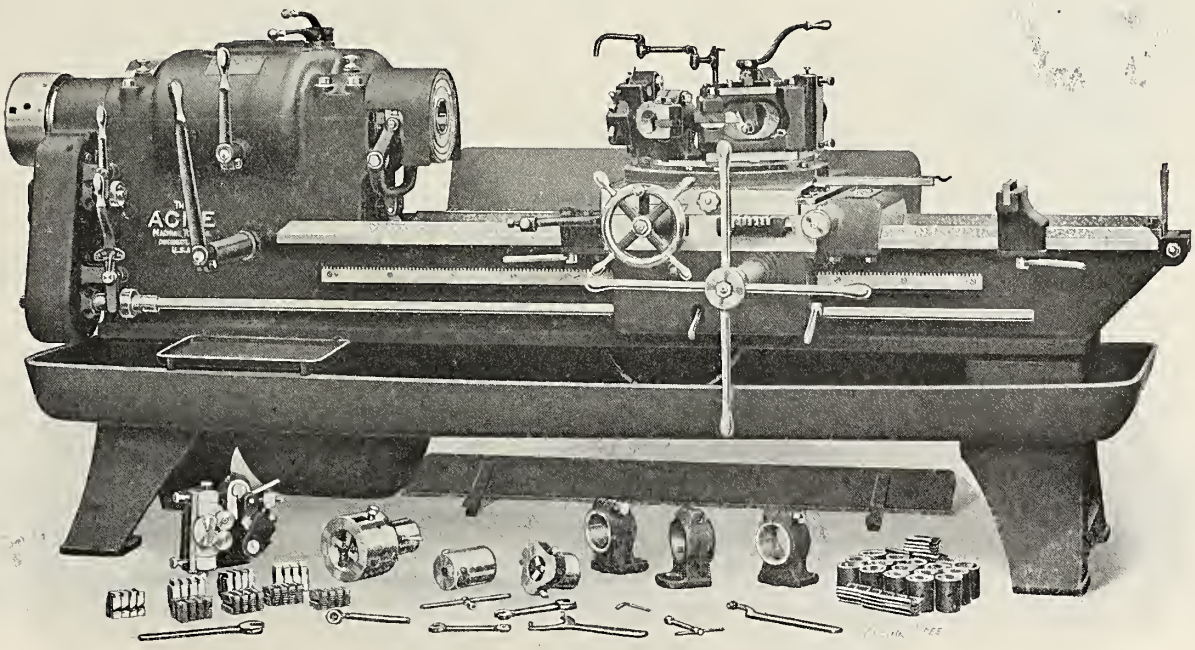

Fig. 2437—3¼ in. x 36 in. Cincinnati Acme Flat Turret Lathe; Acme Machine Tool Company

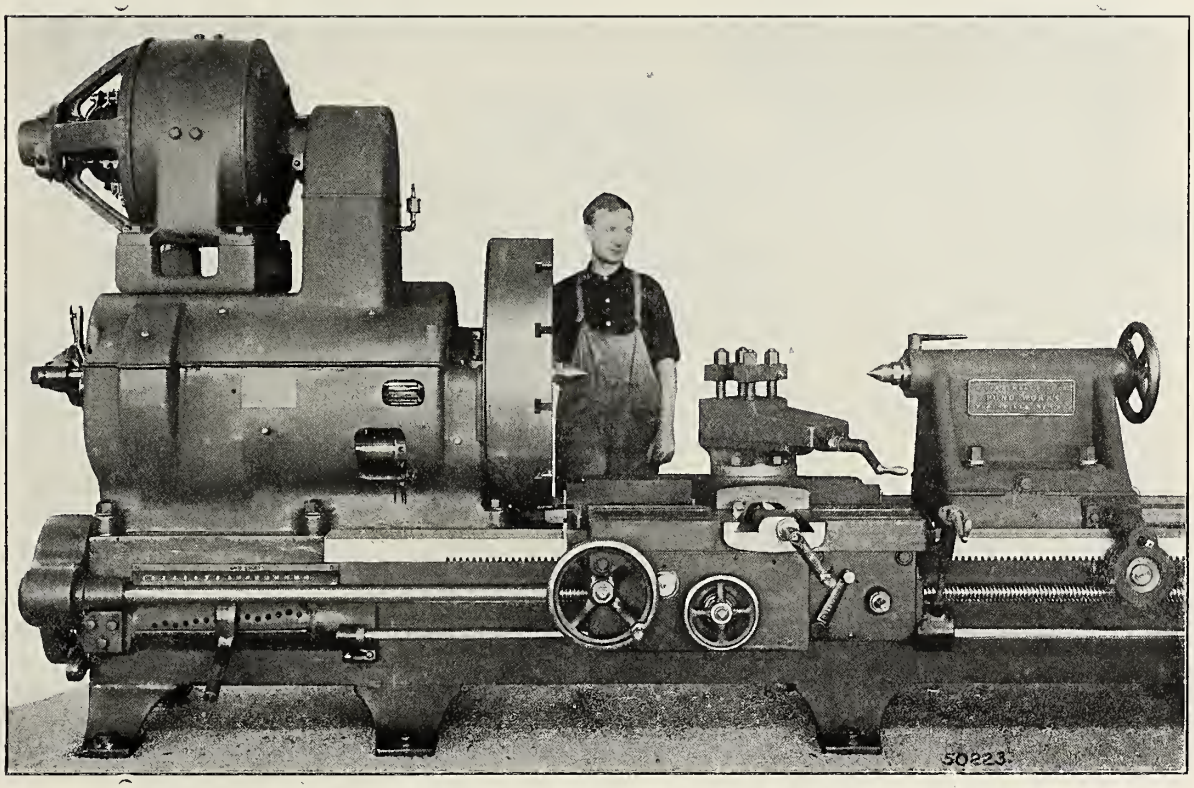

Fig. 2438—Pond 36 in. Triple Geared Engine Lathe; Niles-Bement-Pond Company.

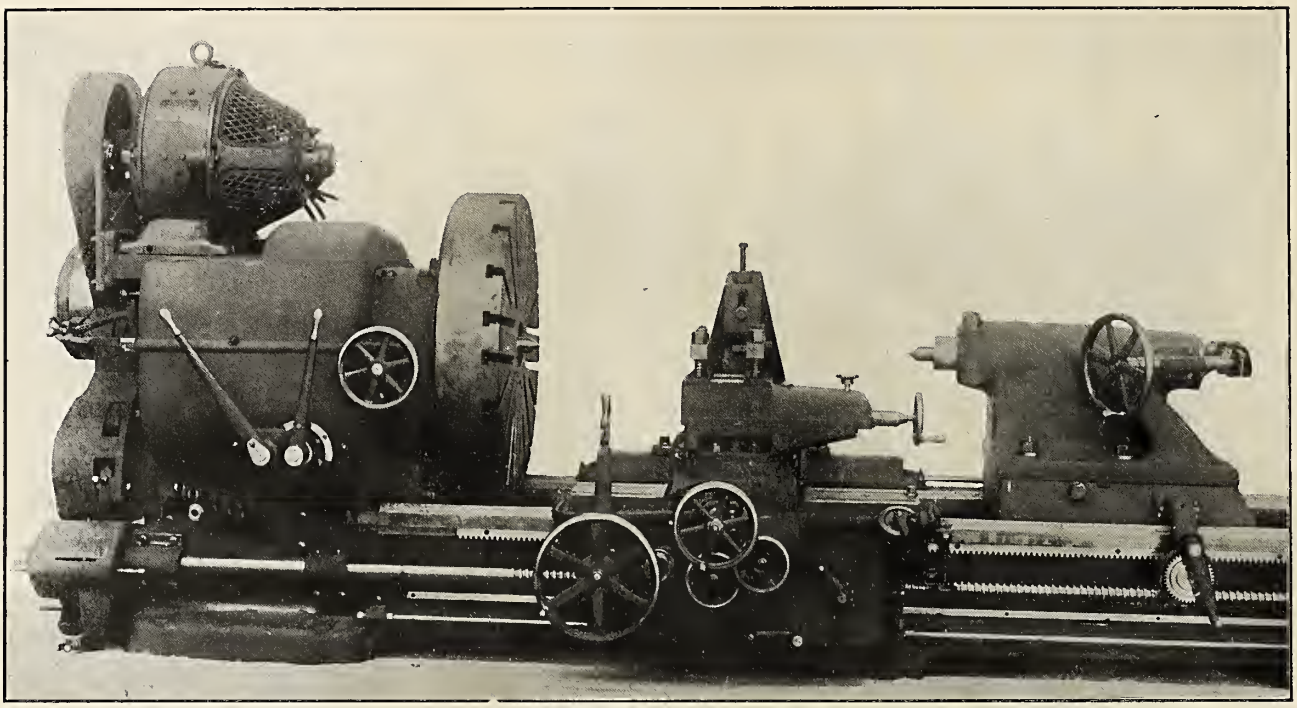

Fig. 2439—Selective Head Screw Cutting Engine Lathe; Lodge & Shipley Machine Tool Company.

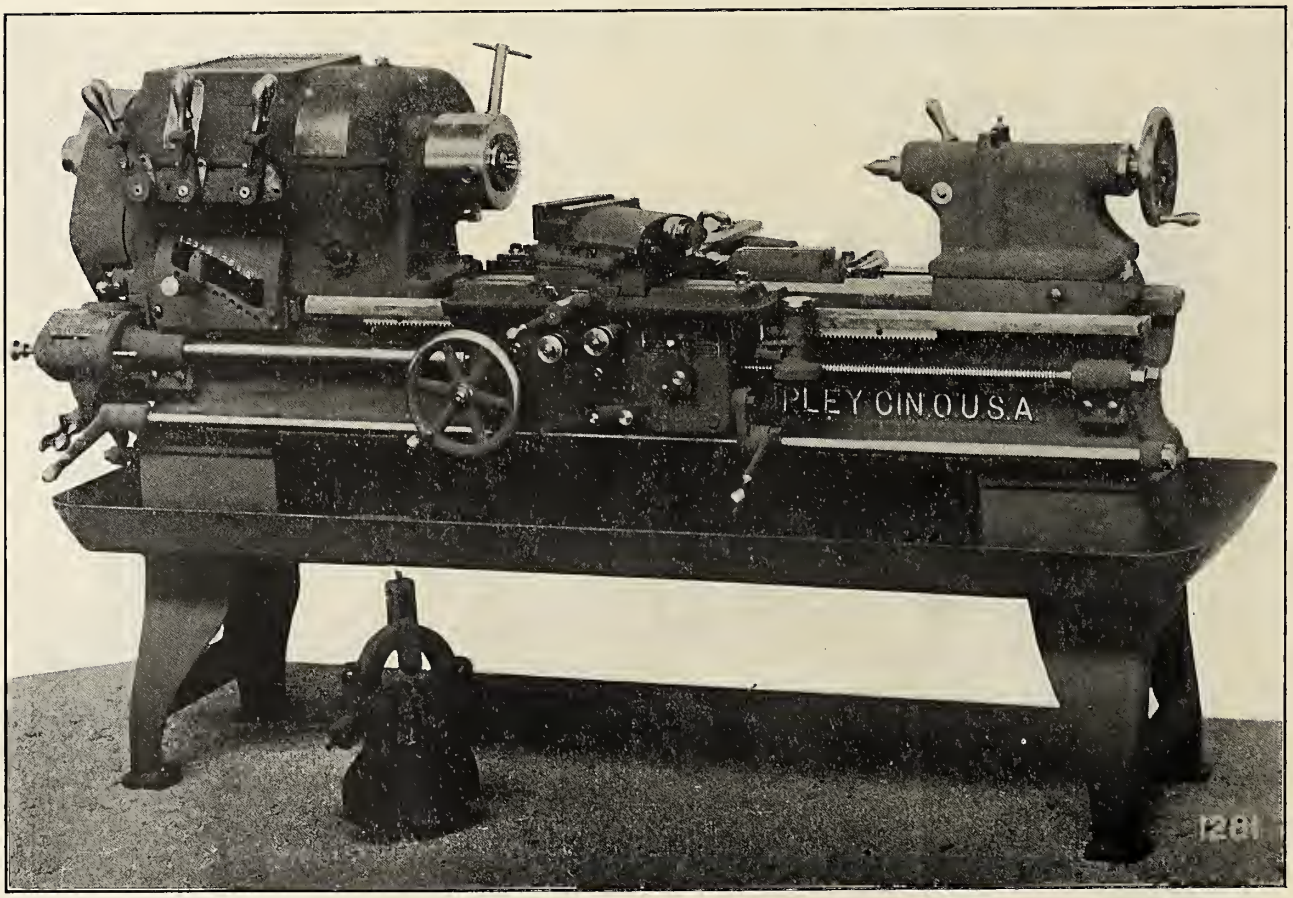

Fig. 2440—Selective Head Tool Room Lathe; Lodge & Shipley Machine Tool Company.

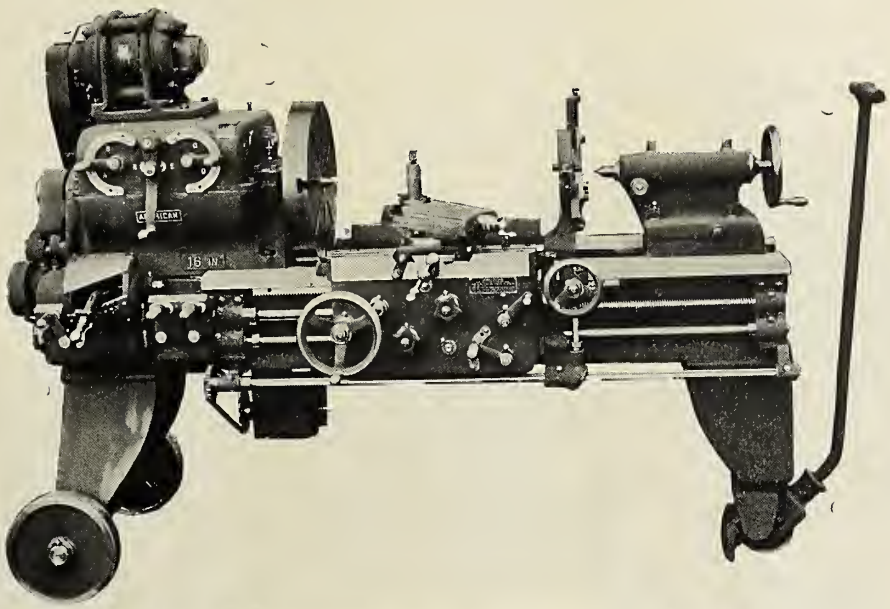

Fig. 2441—16 in. High Duty Portable Lathe; American Tool Works Company.

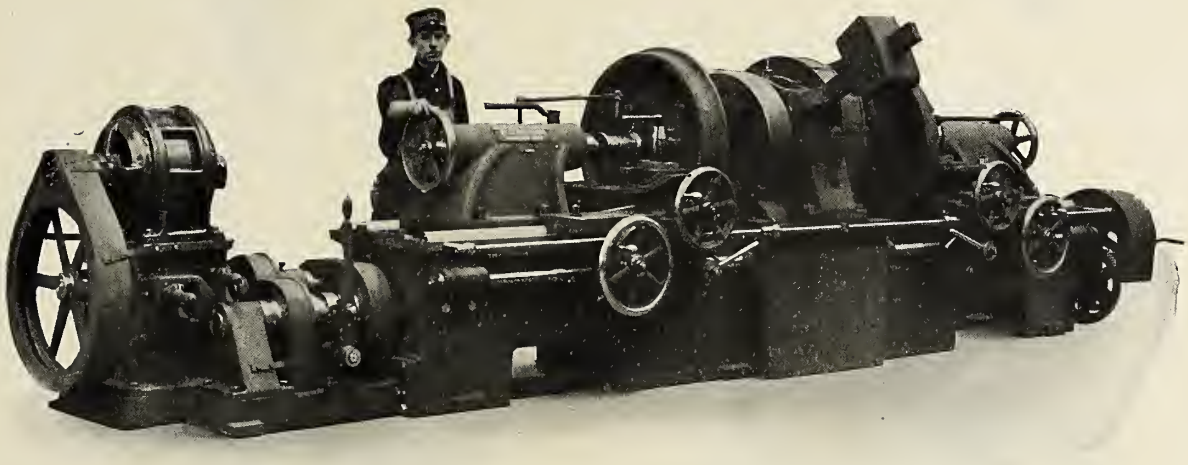

Fig. 2442—Niles Combination Journal and Axle Turning Lathe; Niles-Bement-Pond Company.

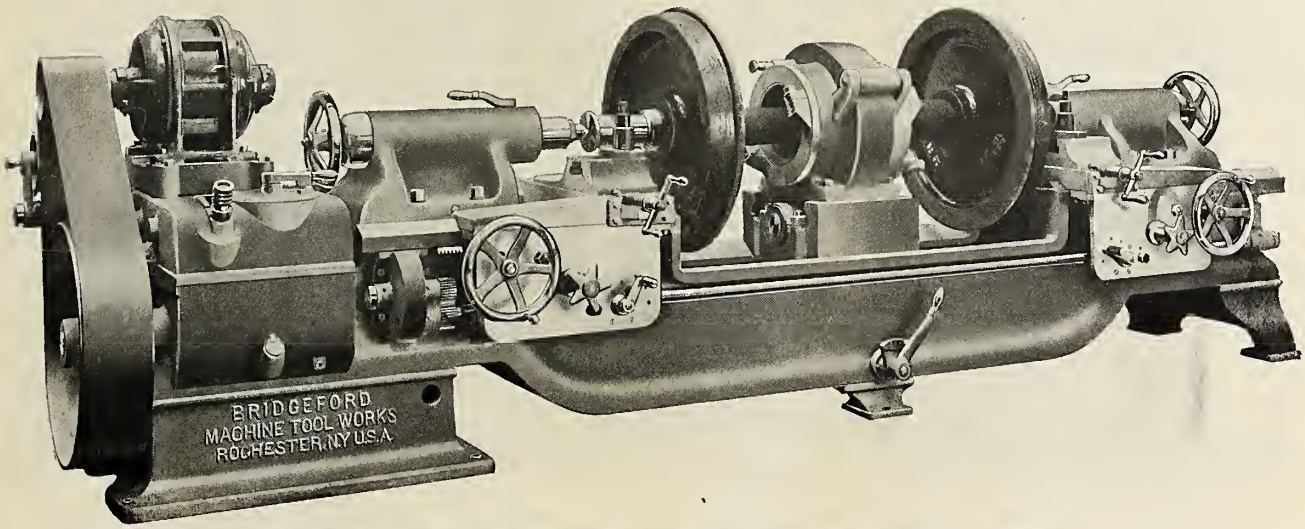

Fig. 2443—Center Drive Journal Truing Lathe; Bridgeford Machine Tool Works.

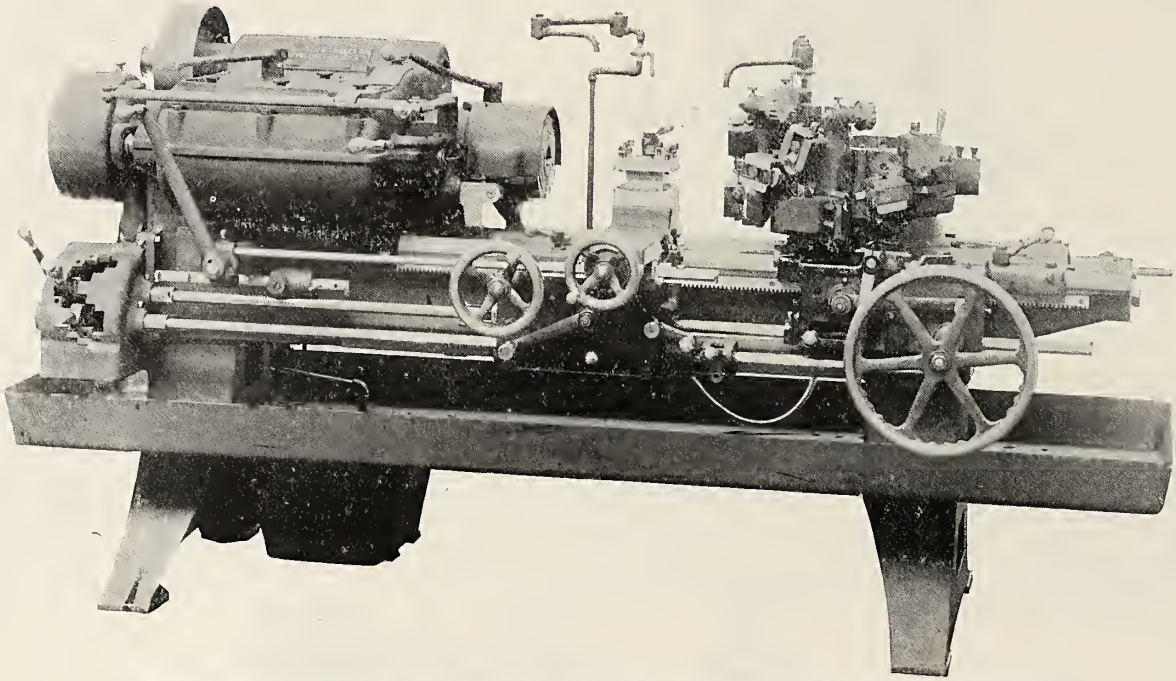

Fig. 2444—Universal Hollow Hexagon Turret Lathe; Warner & Swasey Company.

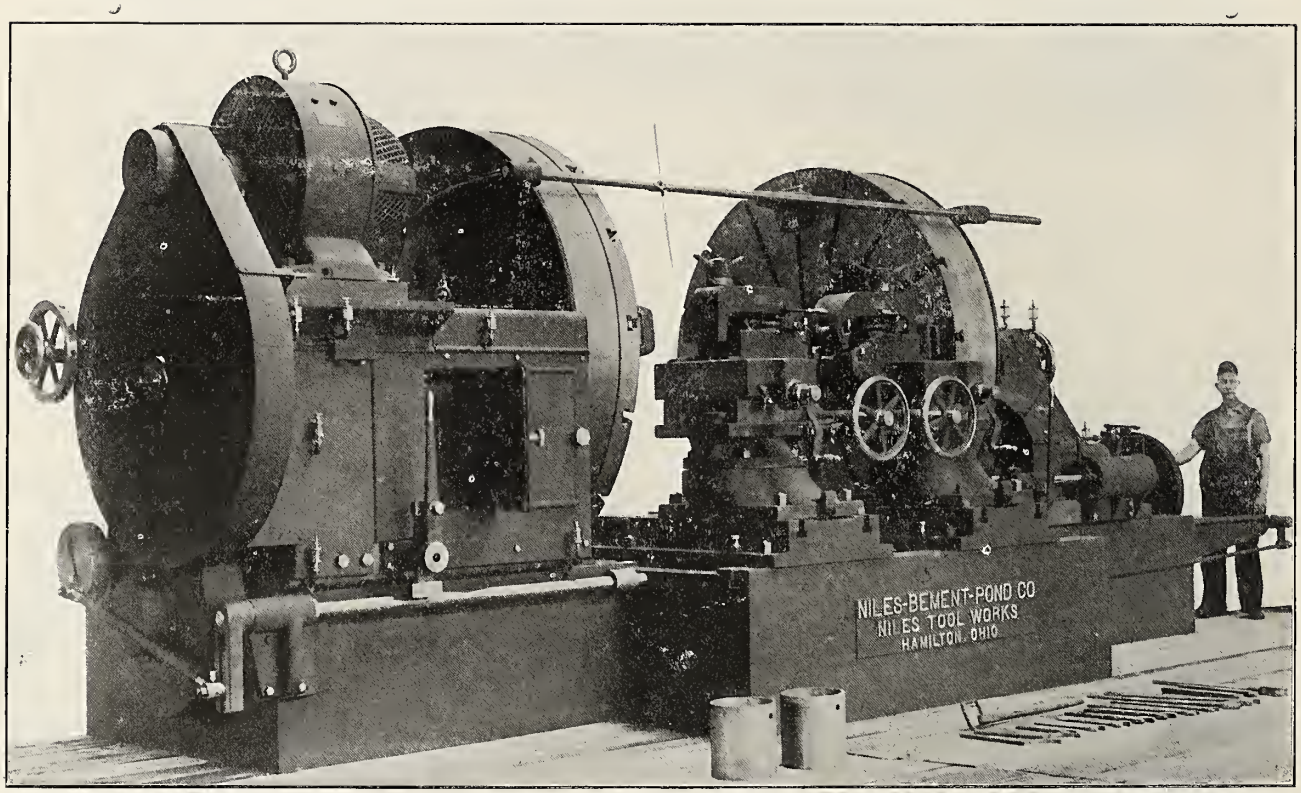

Fig. 2445—Niles Extra Heavy Driving Wheel Lathe with Pneumatically Operated Tool Clamps and Pneumatically Clamped Movable Head; Niles-Bement-Pond Company.

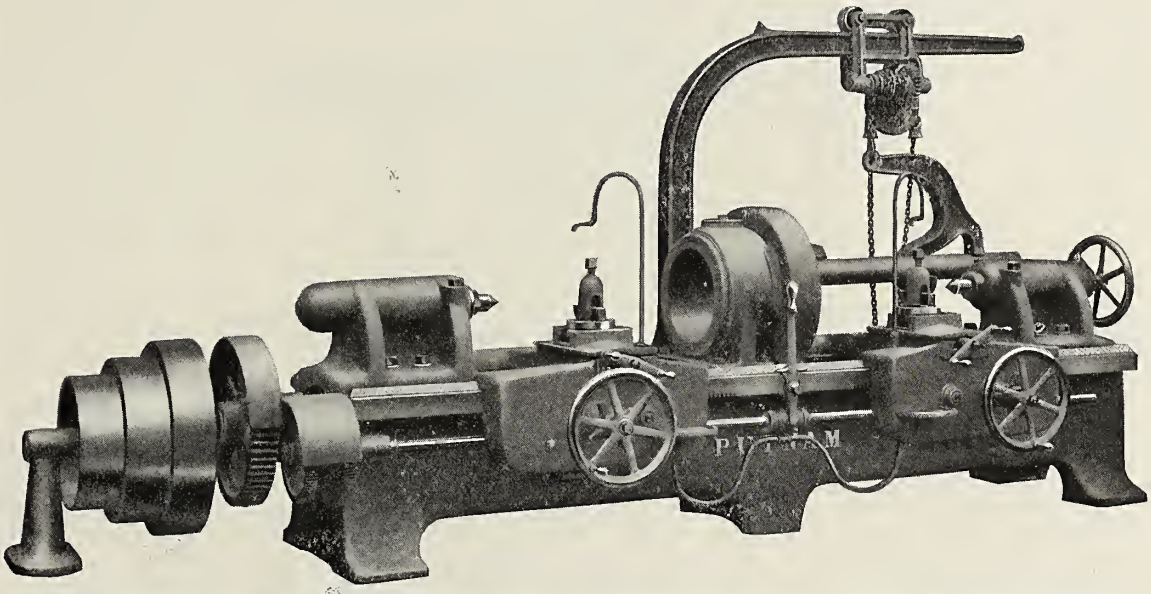

Fig. 2446—No. 4 Double Axle Lathe with Water Attachment and Crane; Putnam Machine Company.

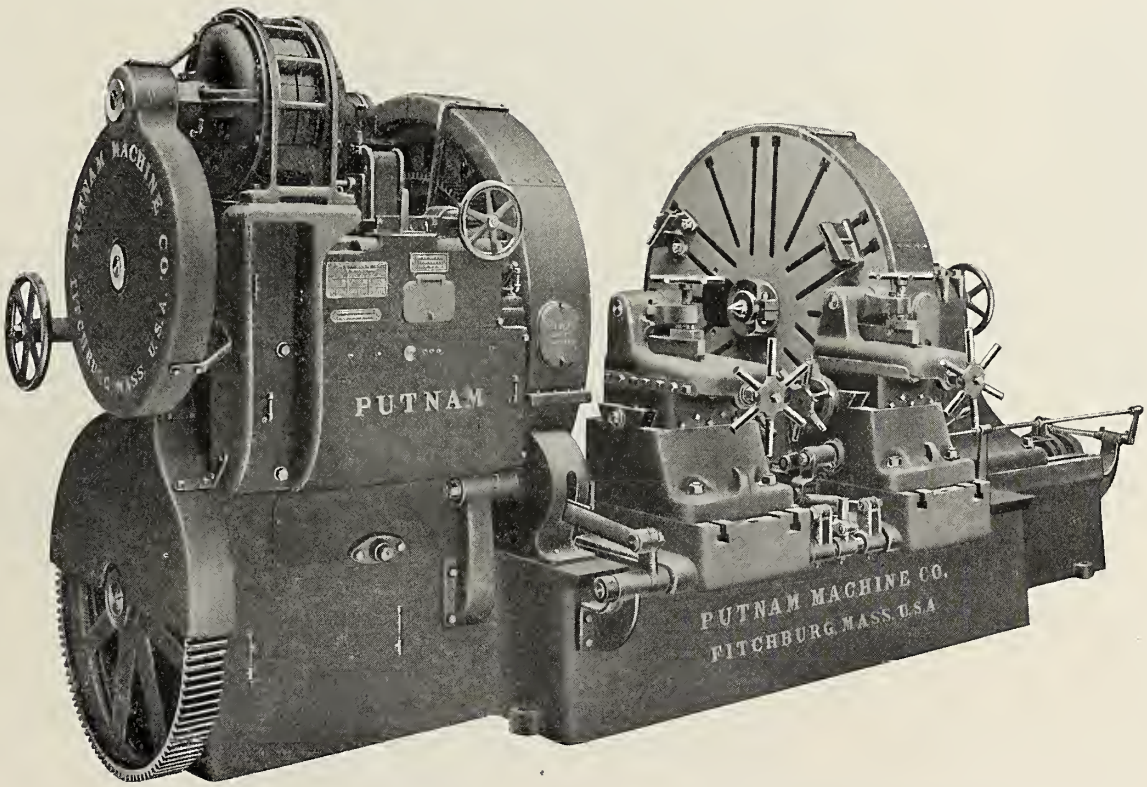

Fig. 2447—Heavy Driving Wheel Lathe, 90 in.; Putnam Machine Company.

Fig. 2448—Wheel Lathe; William Sellers & Company, Inc.

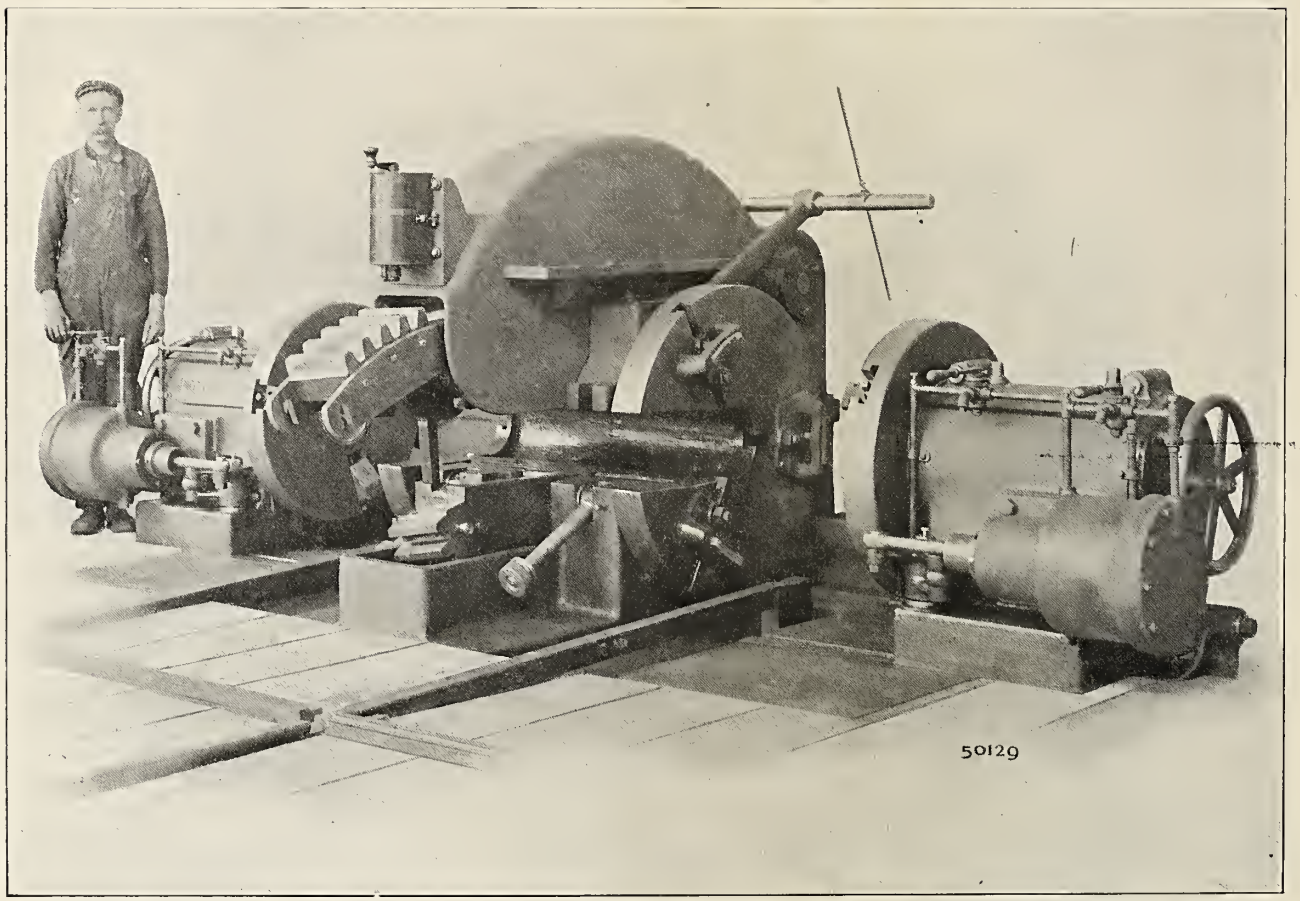

Fig. 2449—Pond New Model Car Wheel Lathe with Pneumatically Operated Segment, Pneumatic Tool Clamps and Pneumatically Operated Tailstock; Niles-Bement-Pond Company.

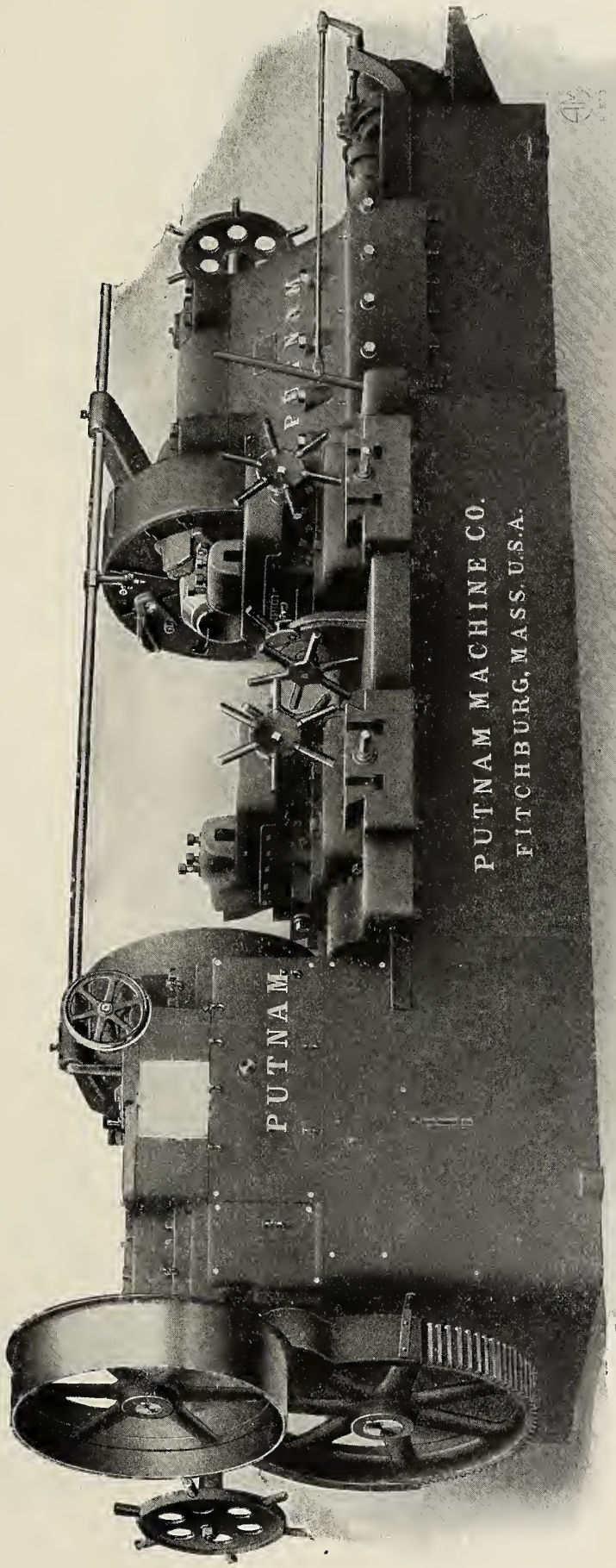

Fig. 2450—42 in. Coach and Truck Wheel Lathe; Putnam Machine Company.

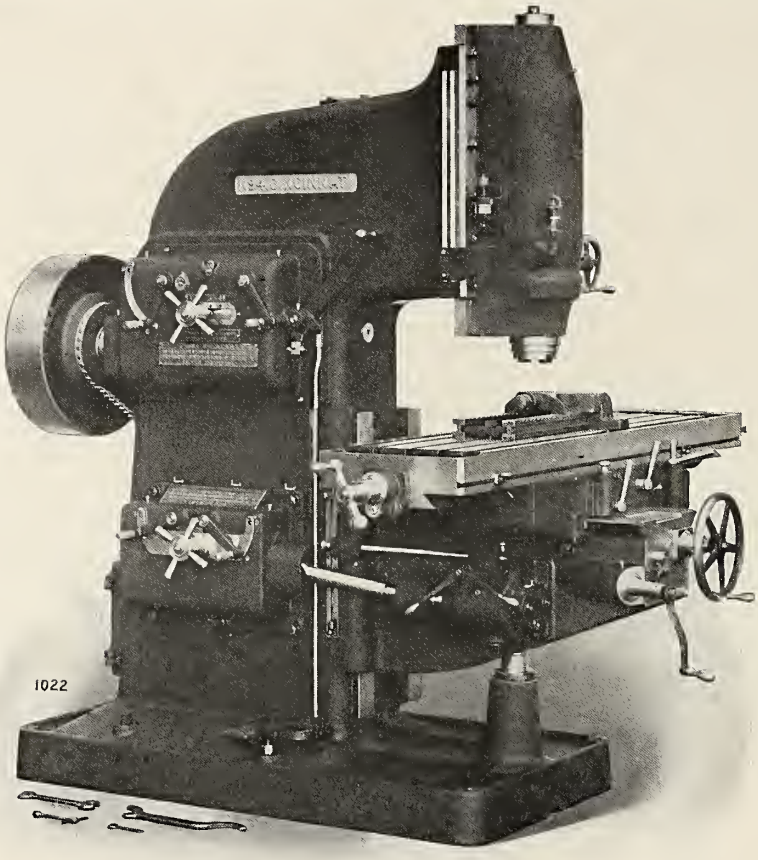

Fig. 2451—High Power Vertical Milling Machine; Cincinnati Milling Machine Company.

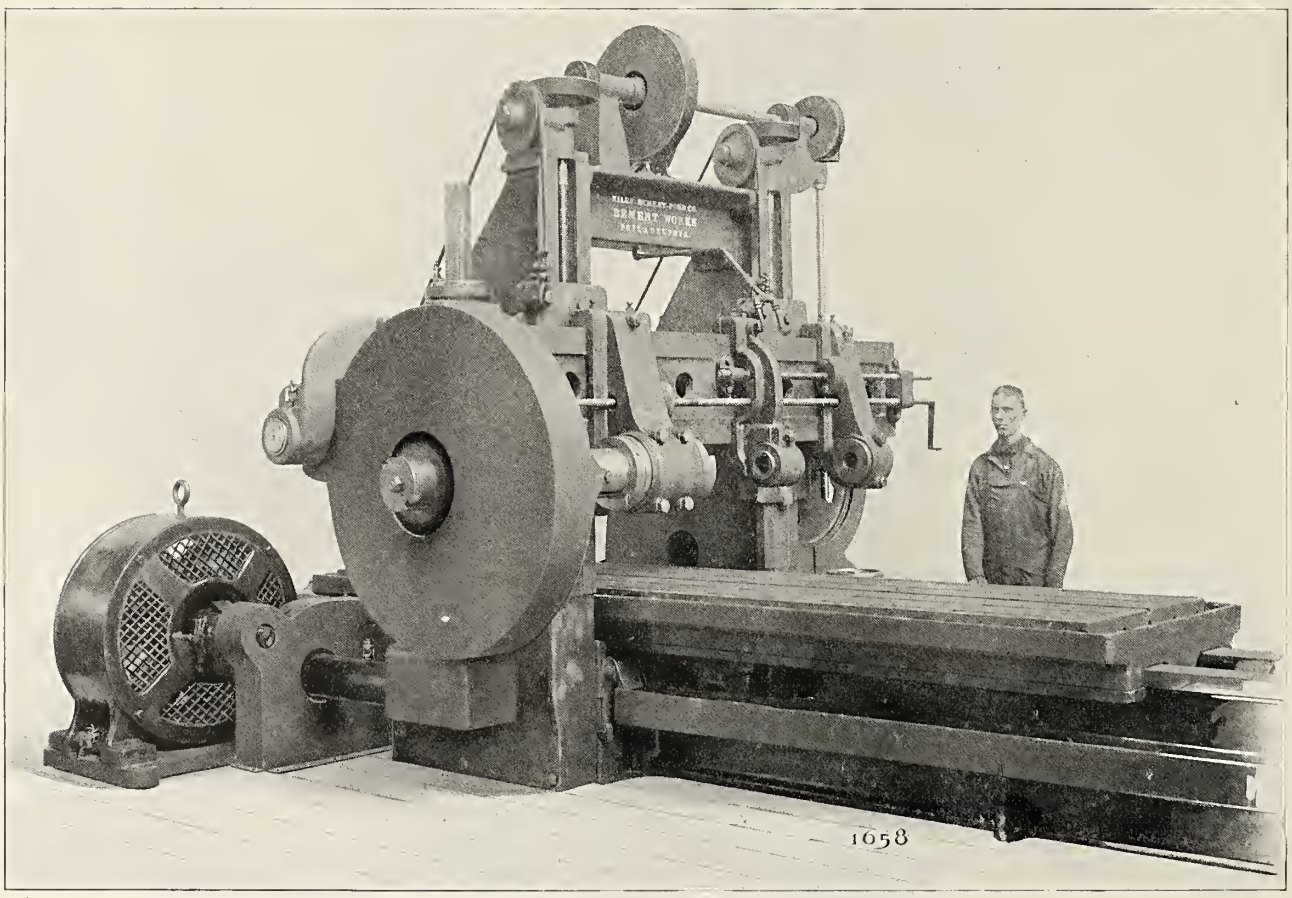

Fig. 2452—Bement Heavy Rod Milling and Fluting Machine; Niles-Bement-Pond Company.

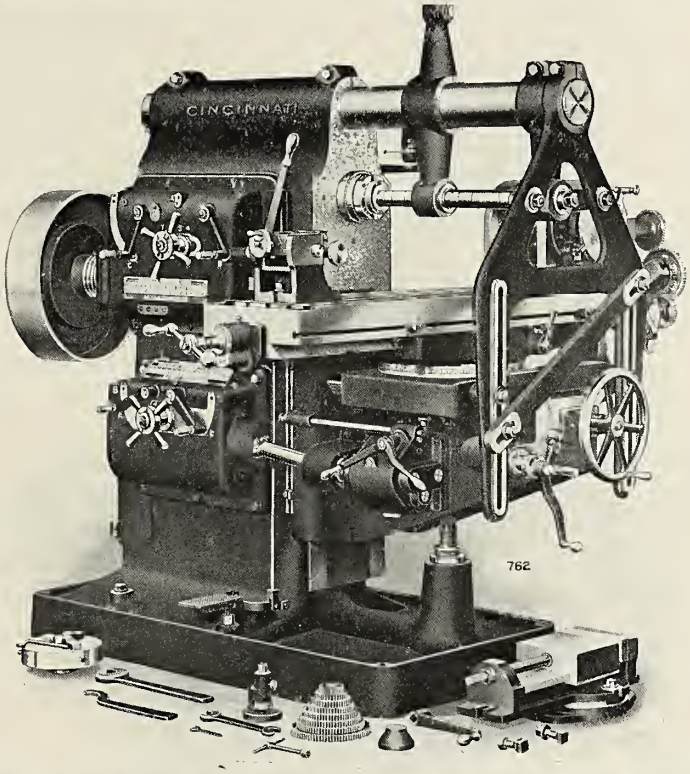

Fig. 2453—High Power Universal Milling Machine; Cincinnati Milling Machine Company.

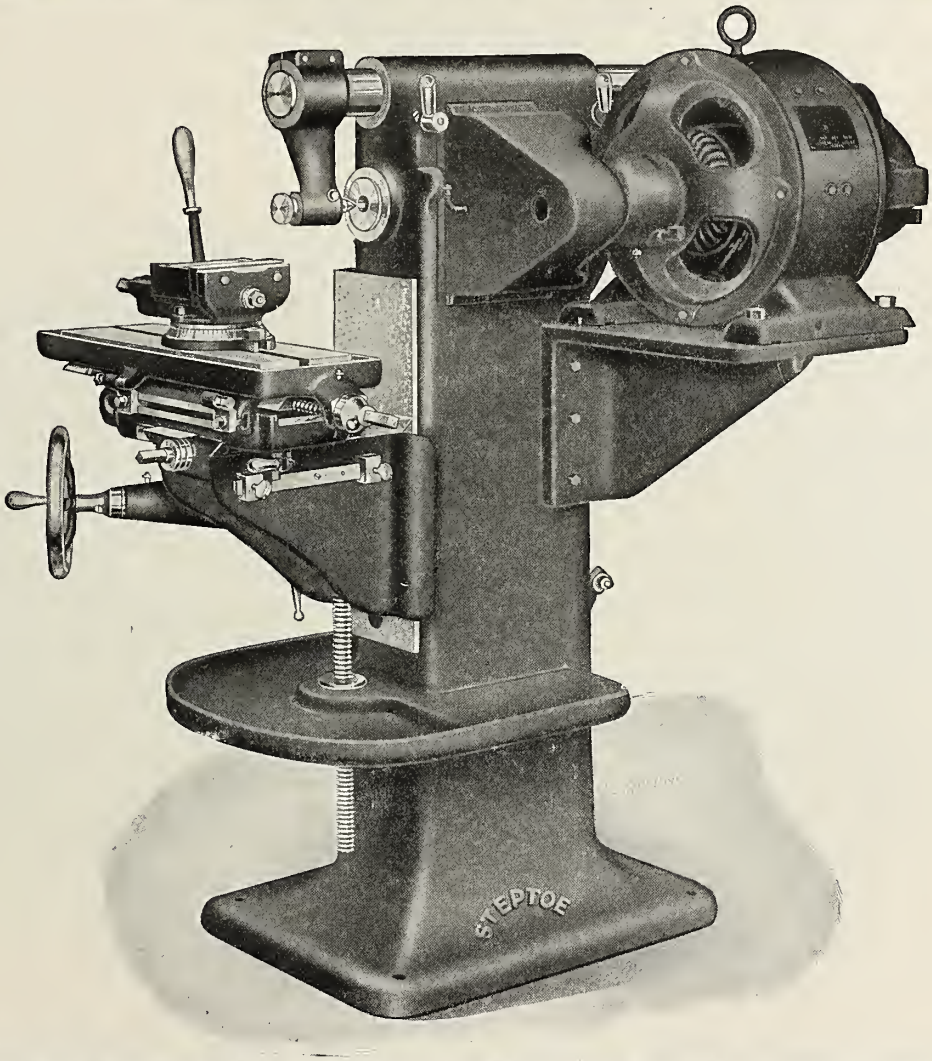

Fig. 2454—Milling Machine for Small Parts and Keyseating Shafts; John Steptoe Company.

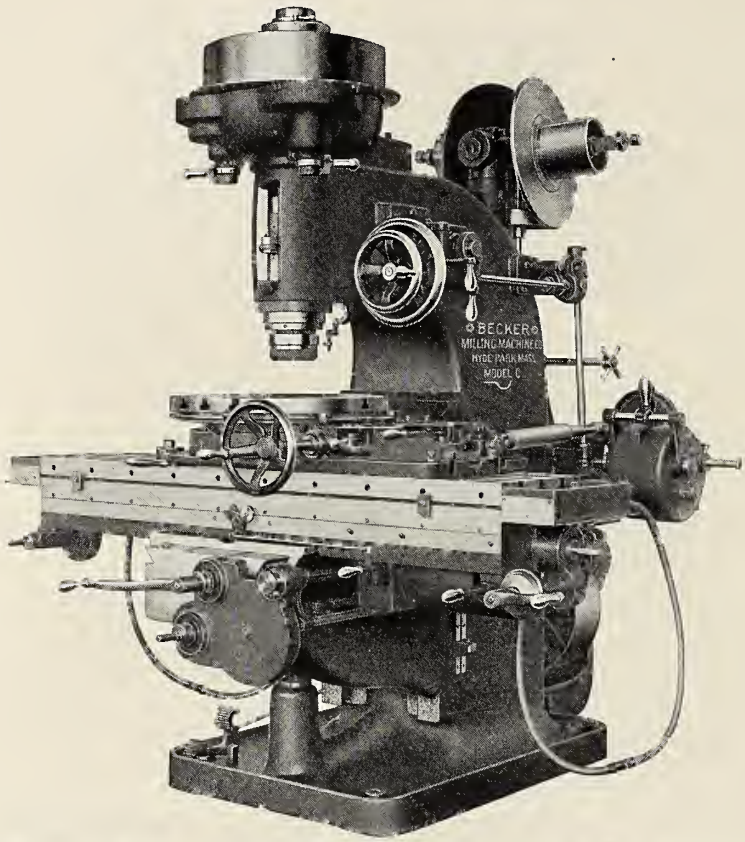

Fig. 2455—Model C, Becker Vertical Milling Machine; Becker Milling Machine Company.

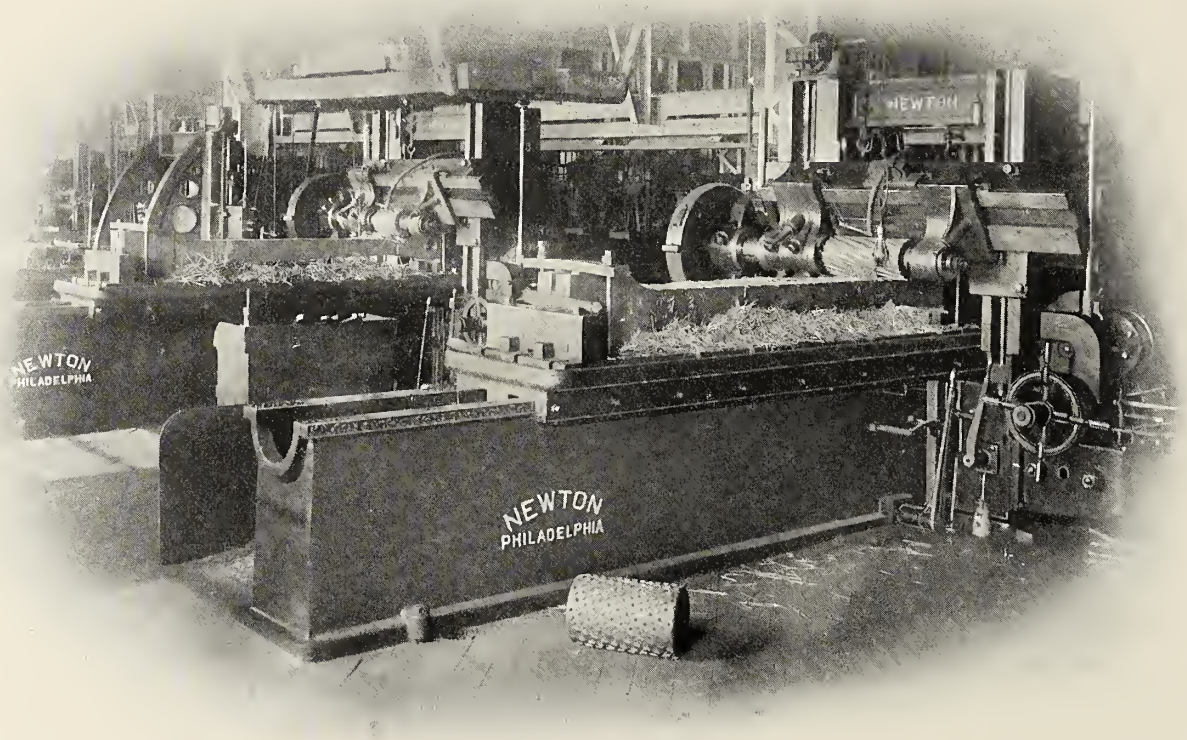

Fig. 2456—No. 3 Horizontal Milling Machine; Newton Machine Tool Works.

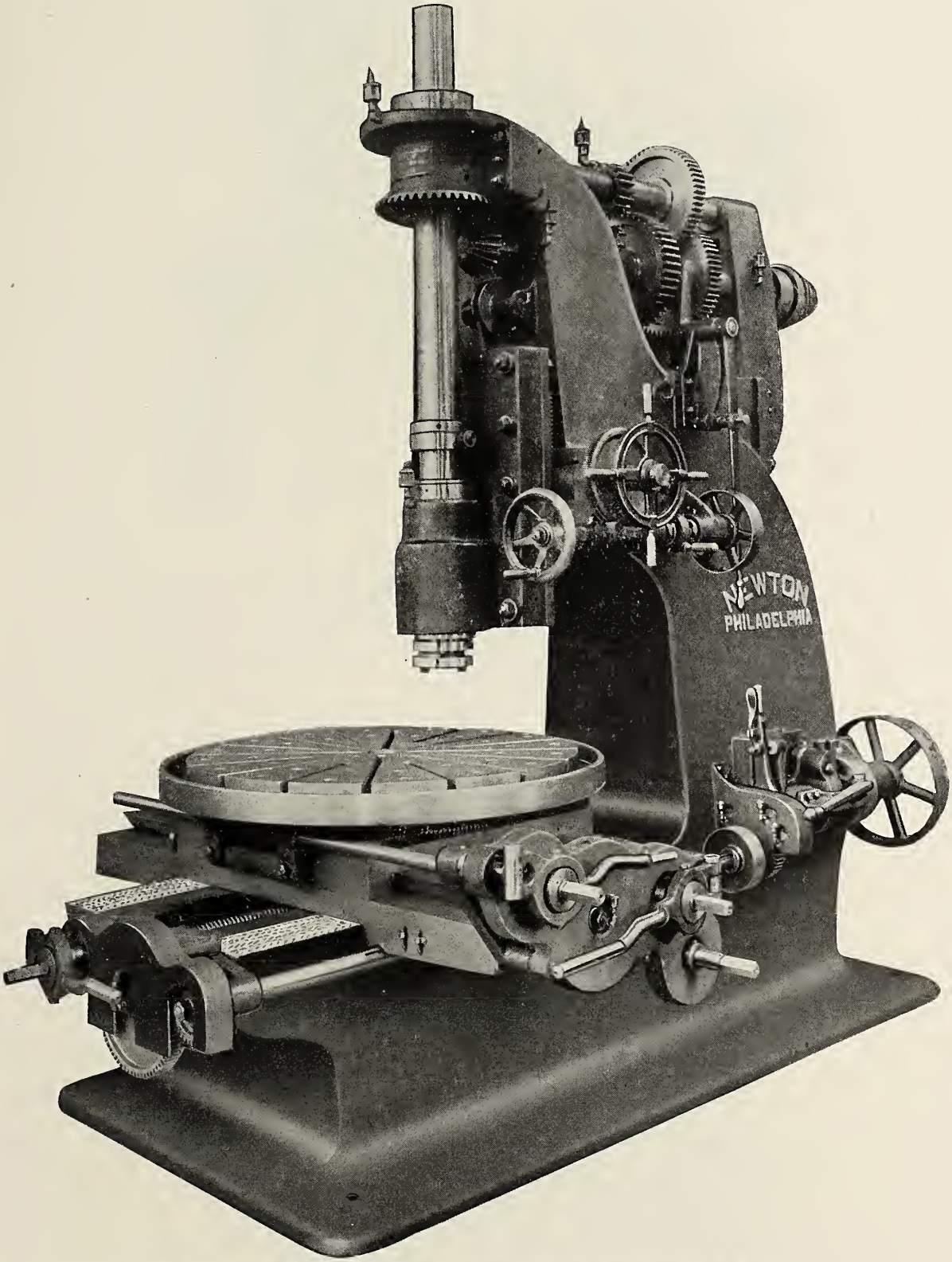

Fig. 2457—No. 3 Vertical Milling Machine; Newton Machine Tool Works.

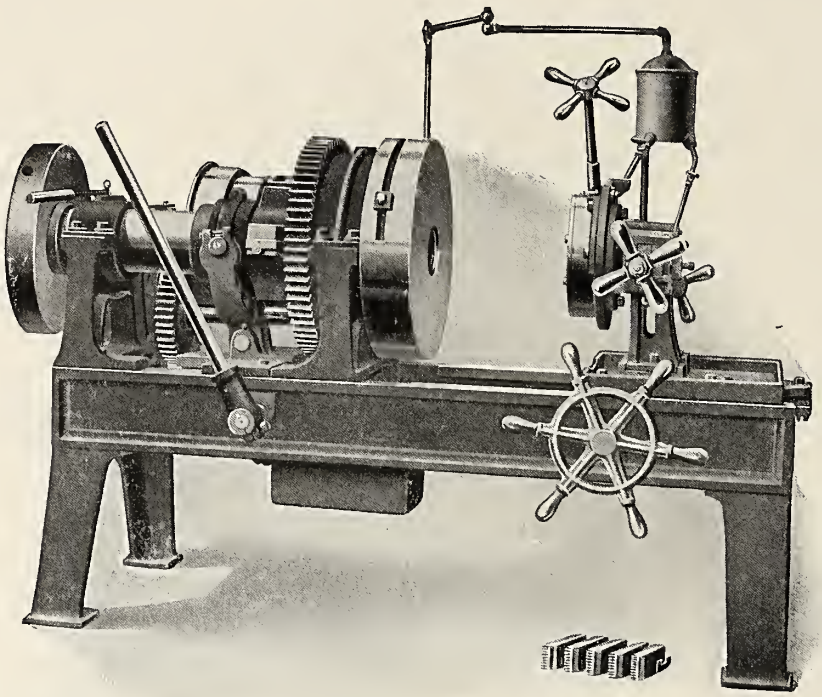

Fig. 2458—Pipe Threading Machine; D. Saunder's Sons.

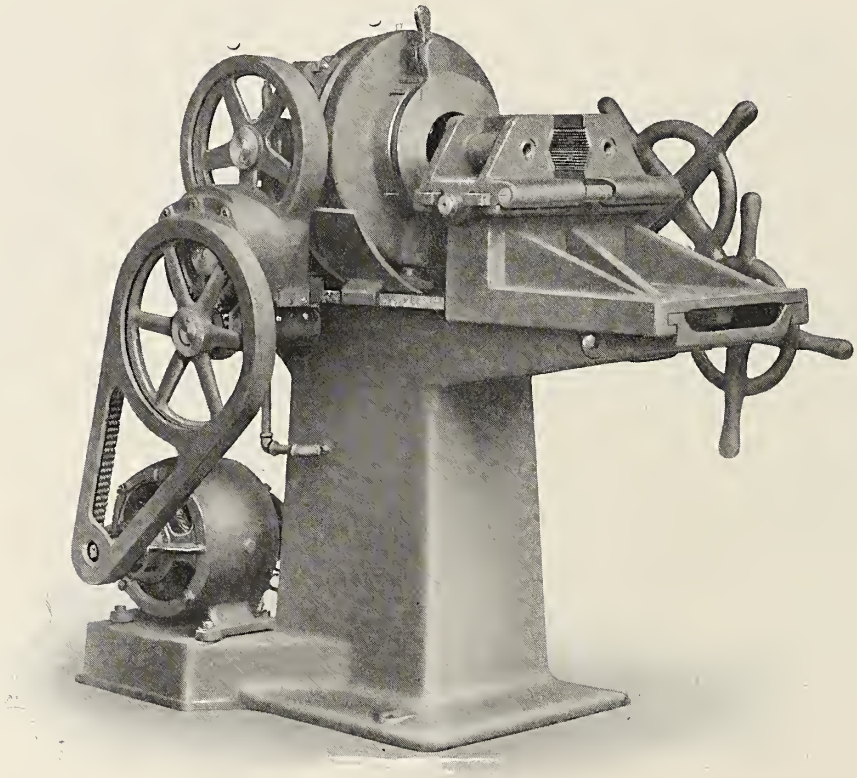

Fig. 2459—Pipe Threading Machine; Oster Manufacturing Company.

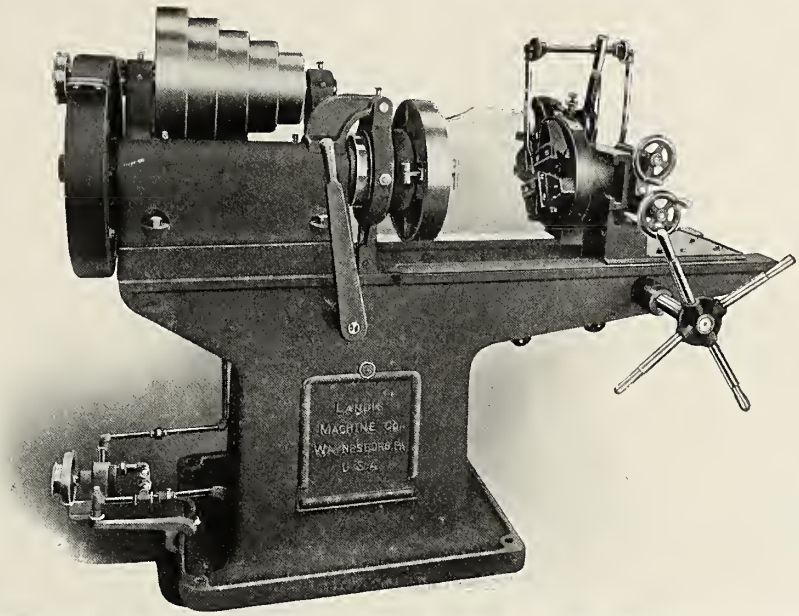

Fig. 2460—2 in. Pipe Threading and Cutting Machine; Landis Machine Company.

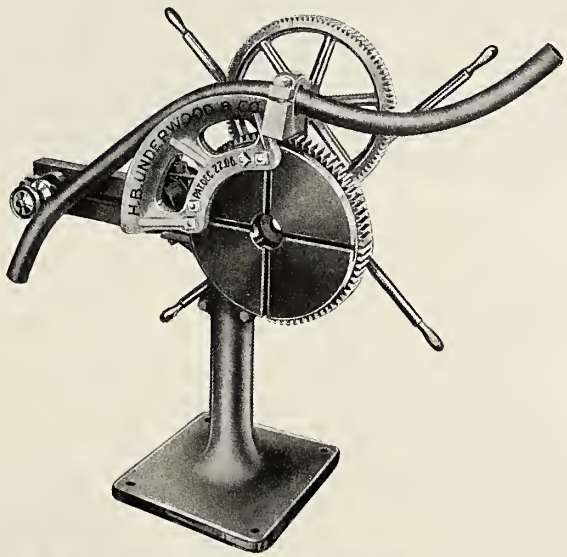

Fig. 2461—Pipe Bending Machine; H. B. Underwood & Company.

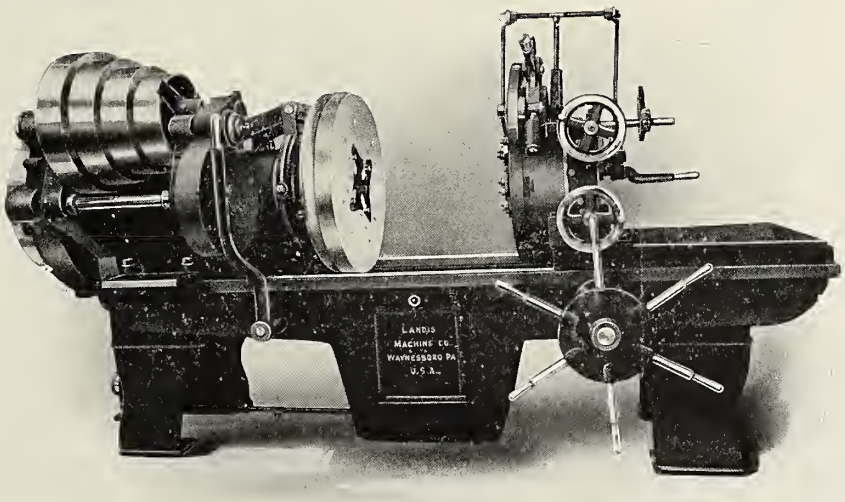

Fig. 2462—4 in. Pipe Threading and Cutting Machine; Landis Machine Company.

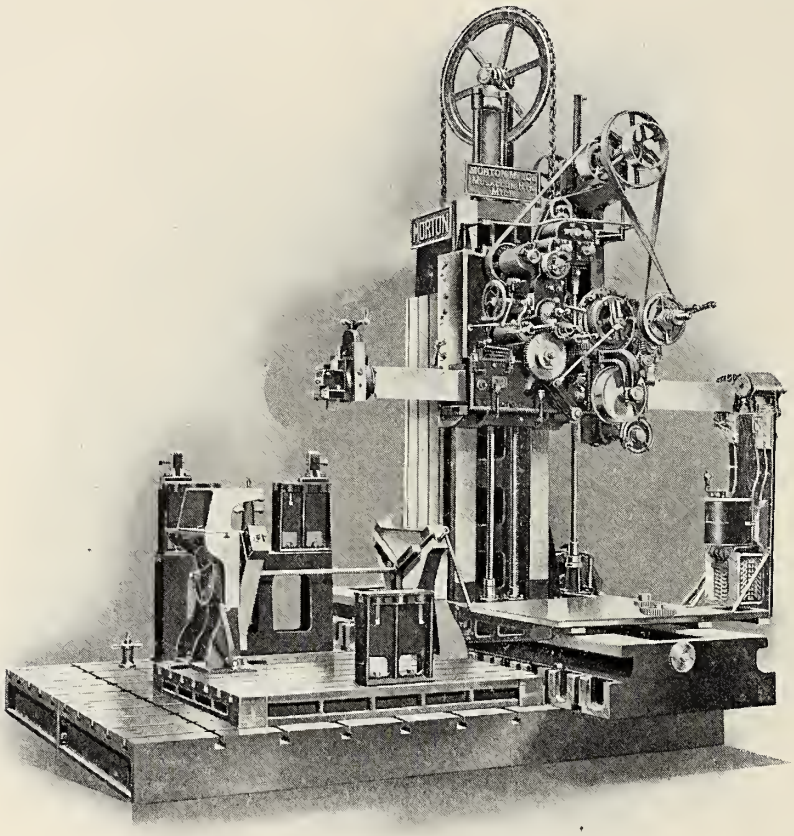

Fig. 2463—Draw Cut Cylinder Planer; Morton Manufacturing Company.

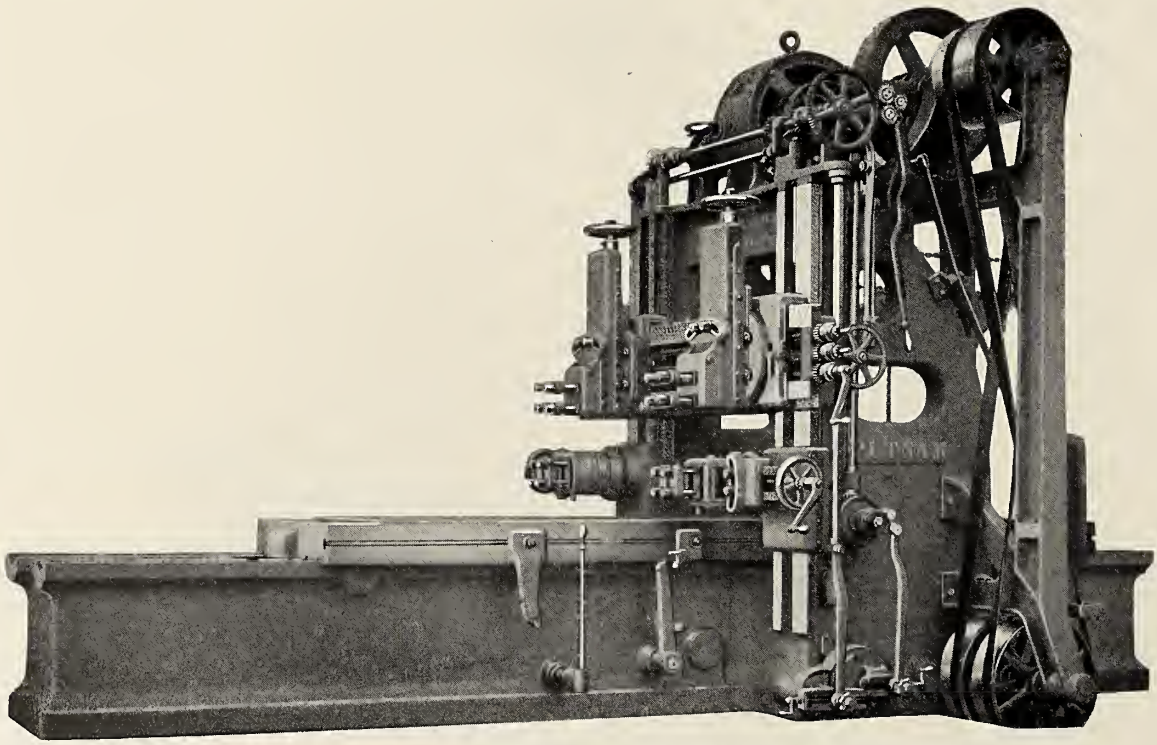

Fig. 2464—Motor Driven 36 in. Planer; Putnam Machine Company.

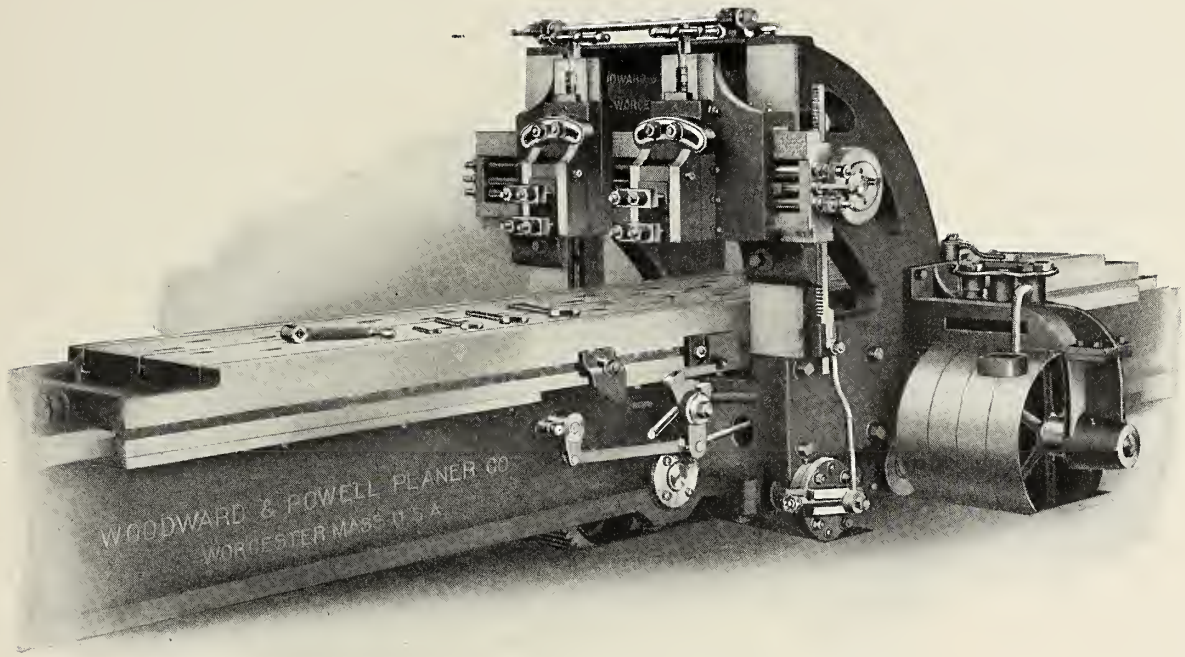

Fig. 2465—Planer; Woodward & Powell Planer Company.

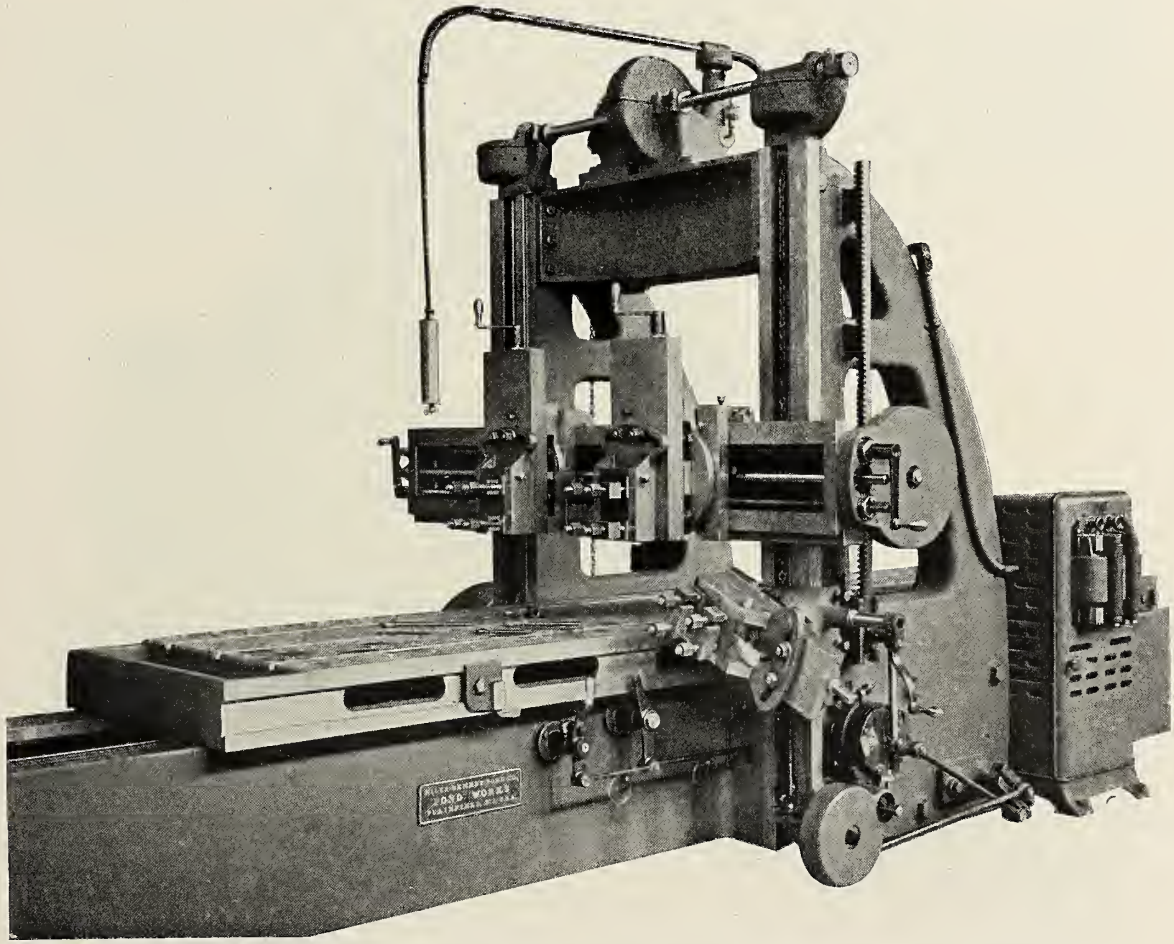

Fig. 2466—Pond 48 in. Reversing Motor Drive Planer; Niles-Bement-Pond Company.

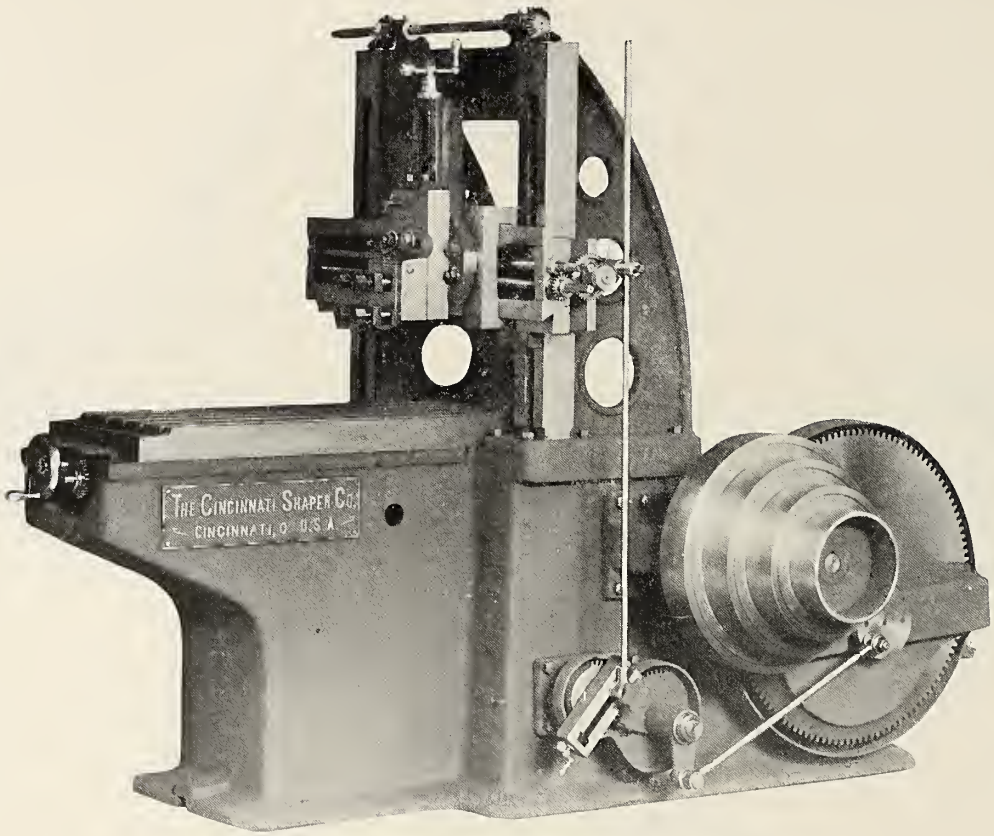

Fig. 2467—Crank Planer; Cincinnati Shaper Company.

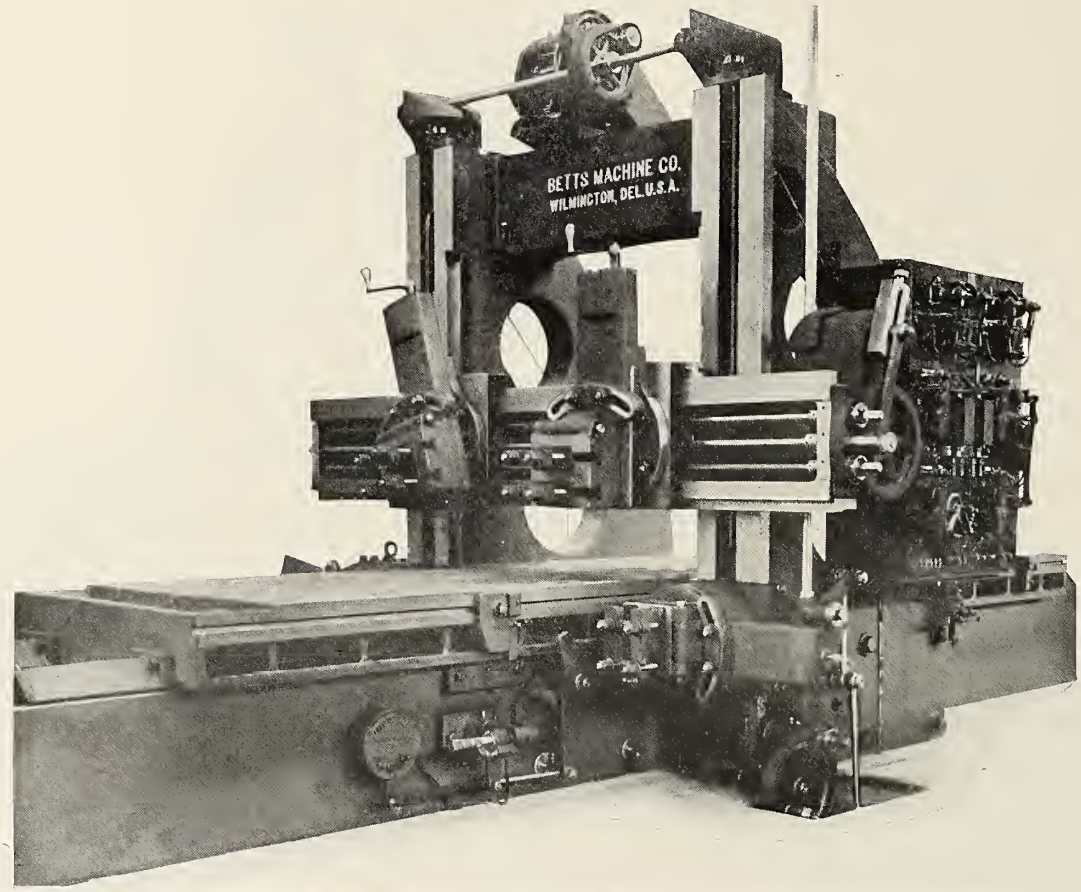

Fig. 2468—Heavy Type 48 in. Planer with Reversing Motor Drive; Betts Machine Company.

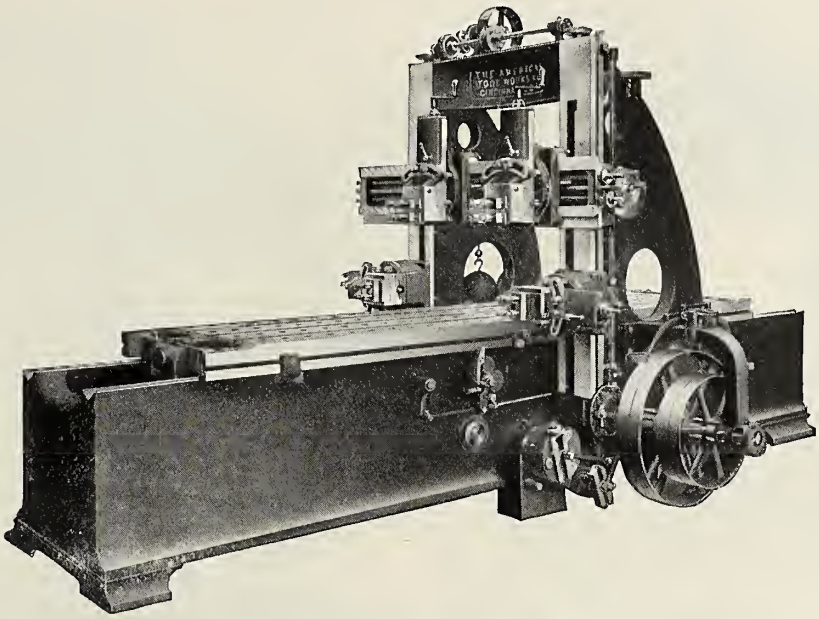

Fig. 2469—Belt Driven 36 in. Planer; American Tool Works Company.

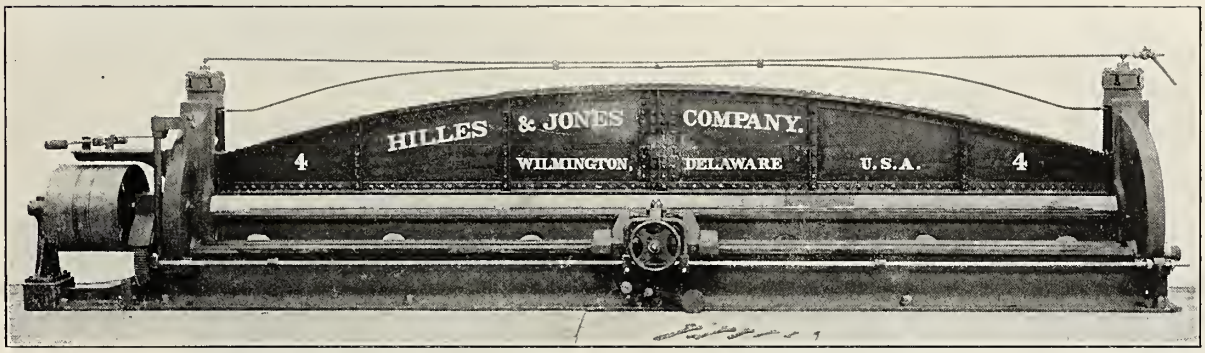

Fig. 2470—Plate Edge Planing Machine; Hilles & Jones Company.

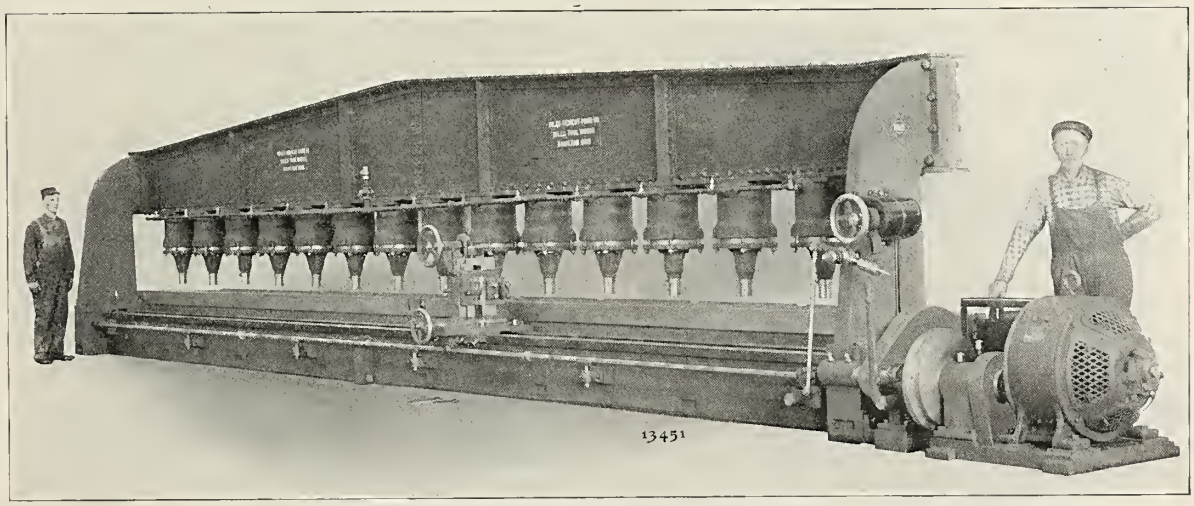

Fig. 2471—Niles Plate Planing Machine with Hydraulic Jacks for Holding Plates in Place; Niles-Bement-Pond Company.

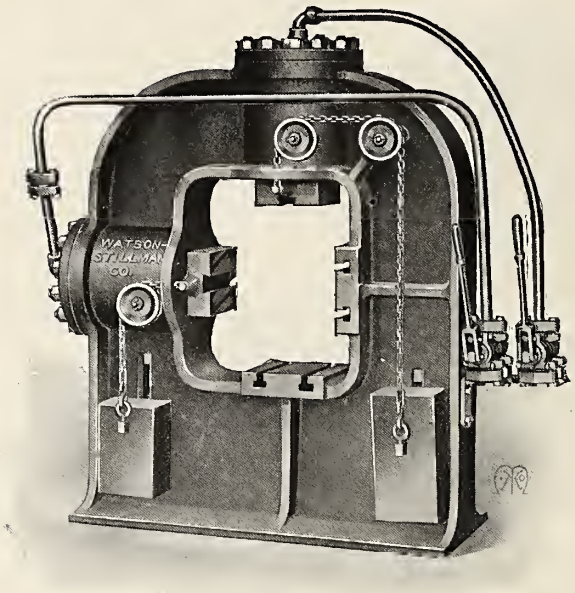

Fig. 2472—Hydraulic Spring Banding Press; Watson-Stillman Company.

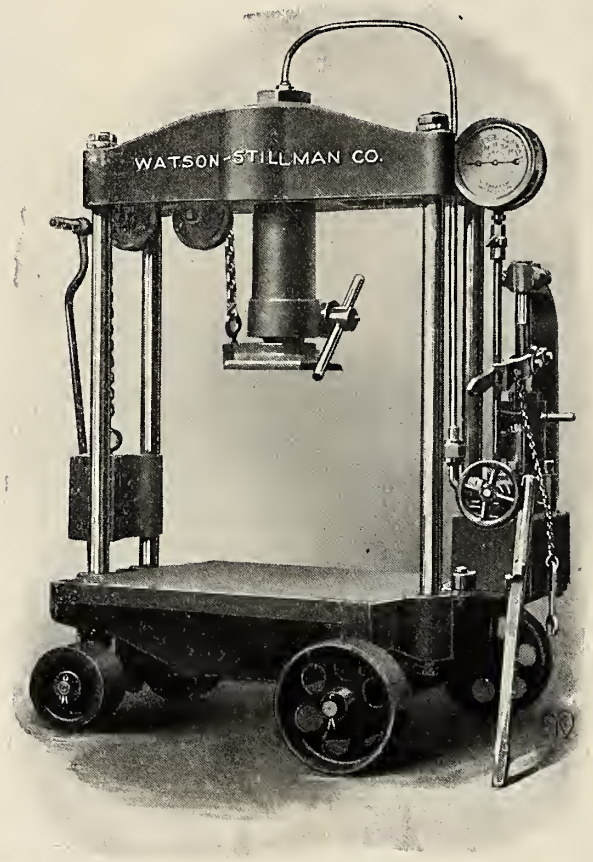

Fig. 2473—Improved Portable Locomotive Axle Bearing Press; Watson-Stillman Company.

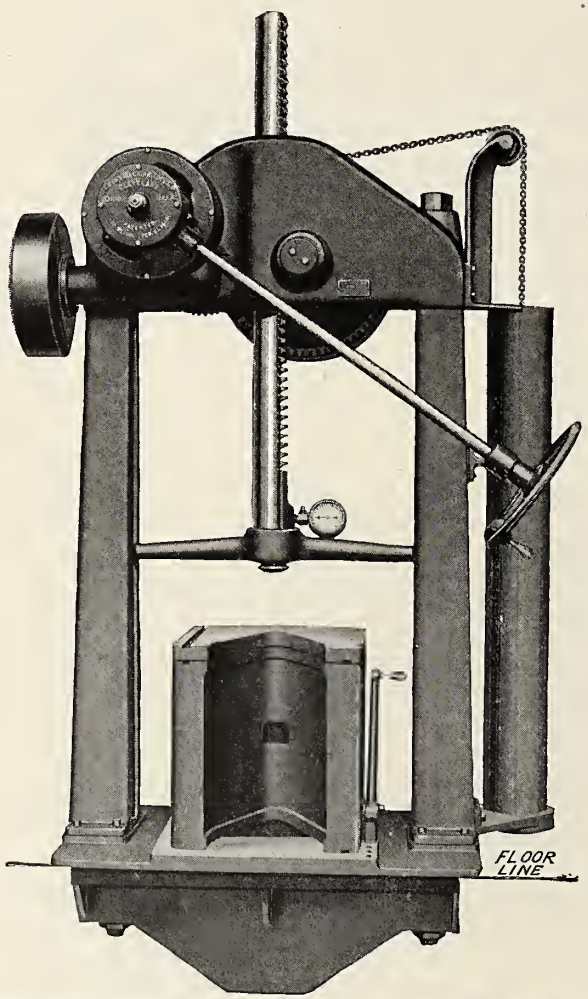

Fig. 2474—50-Ton Power Forcing Press; Lucas Machine Tool Company.

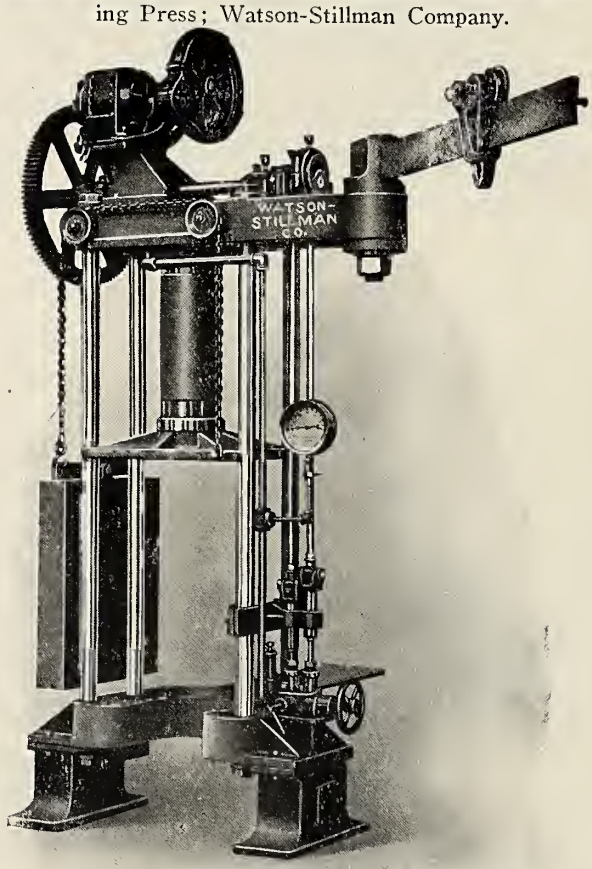

Fig. 2475—Locomotive Driving Box Press; Watson-Stillman Company.

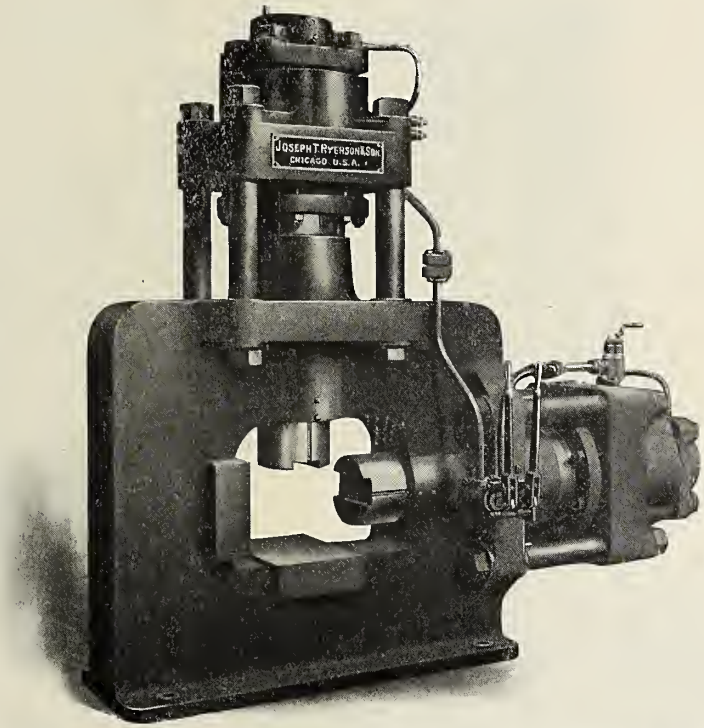

Fig. 2476—Hydraulic Spring Banding Press; Joseph T. Ryerson & Son.

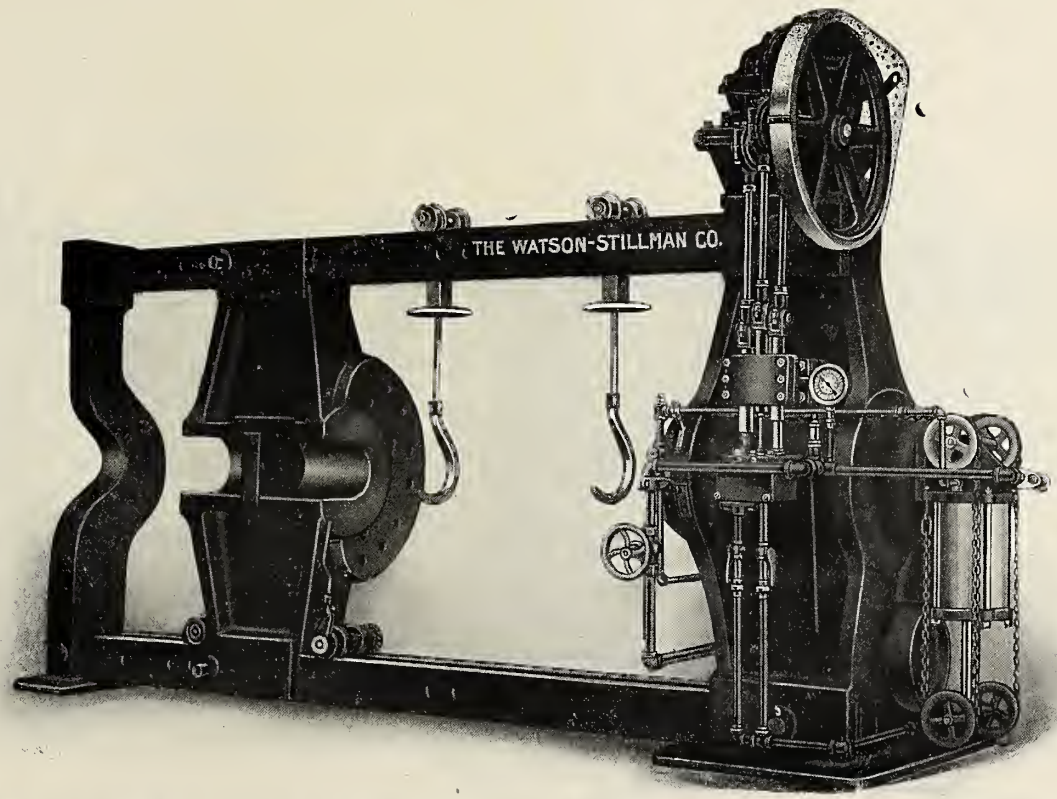

Fig. 2477—600-Ton Motor Driven Hydro-Pneumatic Wheel Press with Triplex Pump; Watson-Stillman Company.

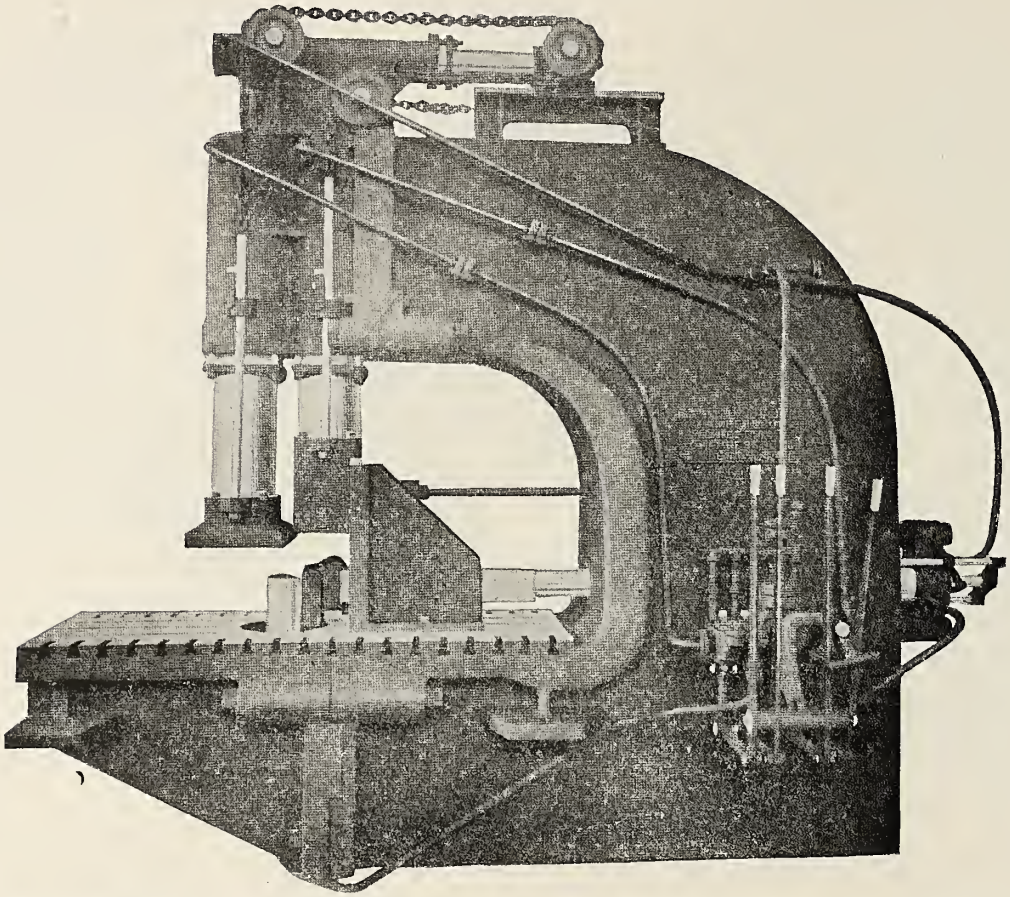

Fig. 2478— Hydraulic Universal Flanging Machine; Chambersburg Engineering Company.

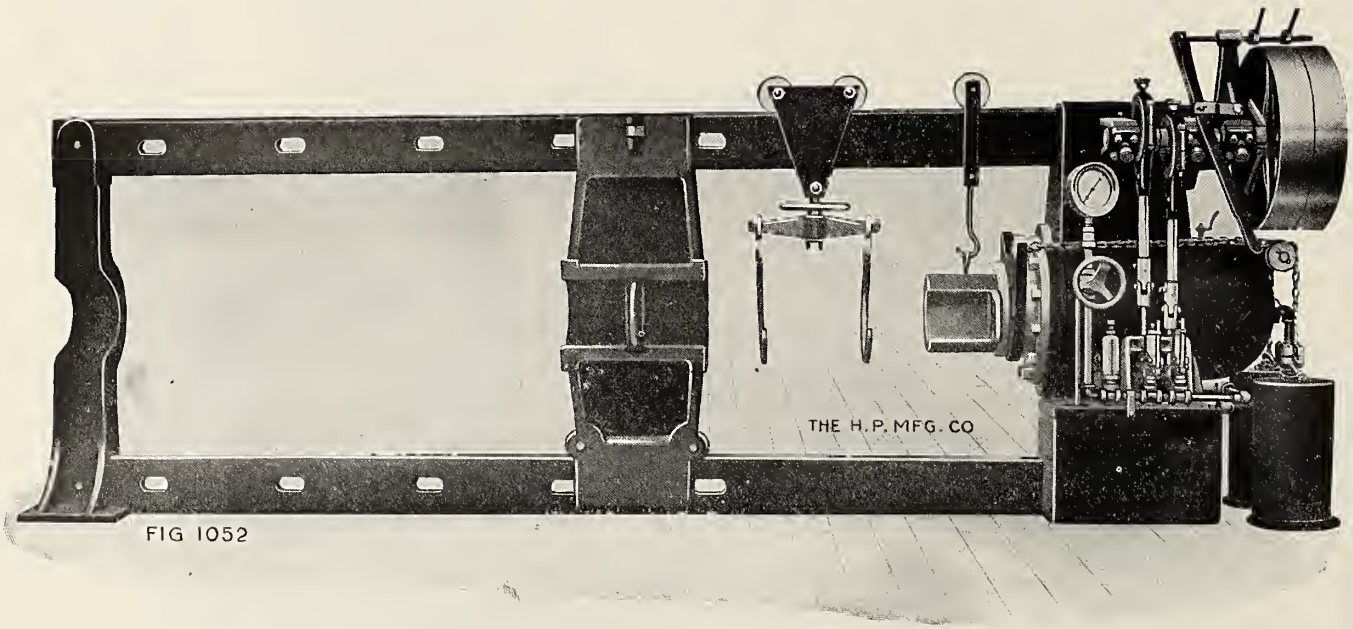

Fig. 2479—Hydraulic Wheel Press; Hydraulic Press Manufacturing Company.

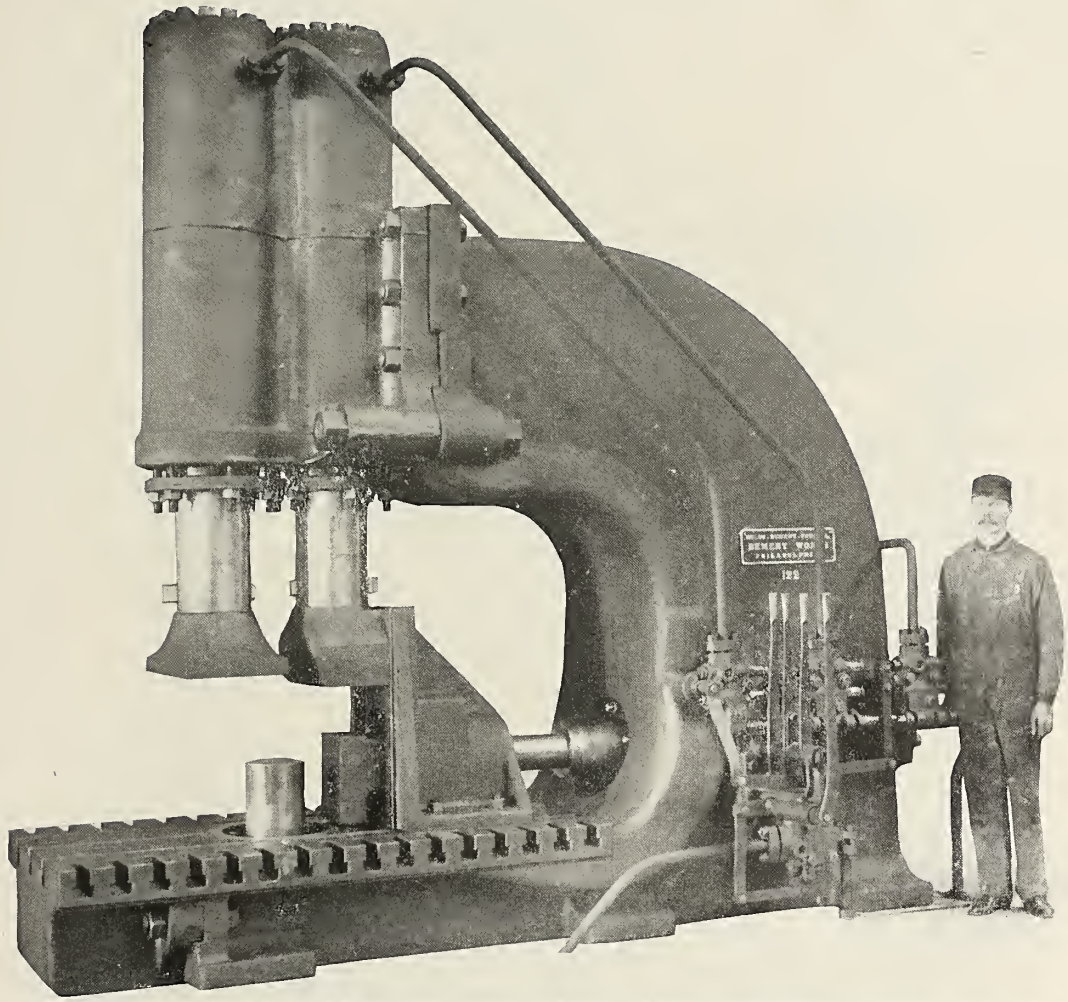

Fig. 2480—Bement 150-Ton Hydraulic Sectional Flanging Press; Niles-Bement-Pond Company.

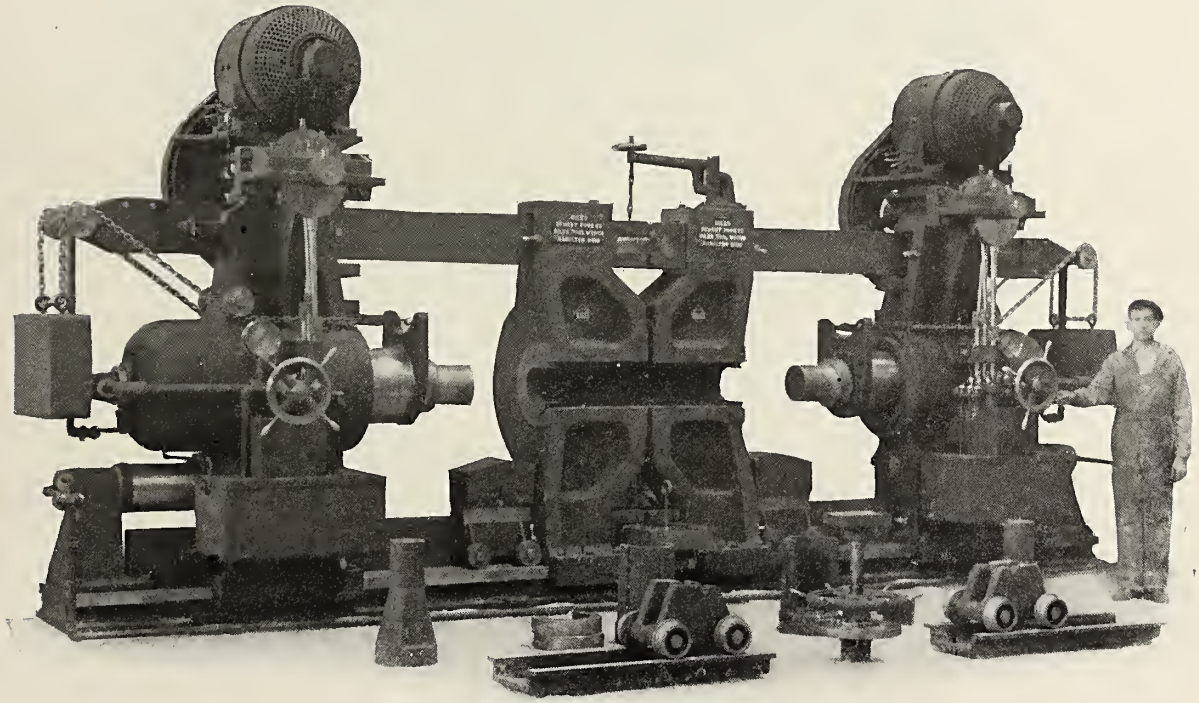

Fig. 2481—Niles 500-Ton Hydraulic Double End Wheel Press; Niles-Bement-Pond Company.

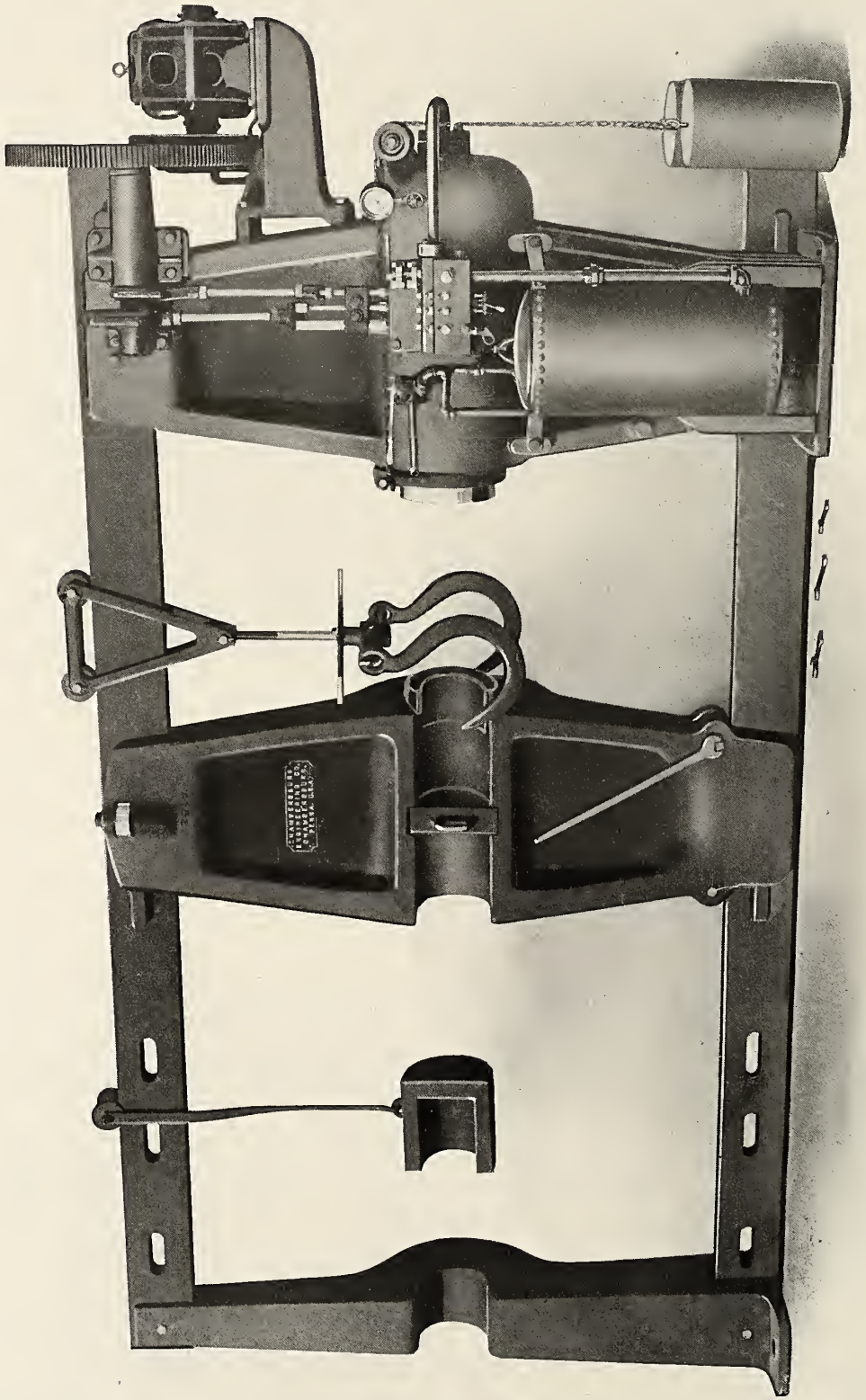

Fig. 2482—600-Ton Hydro-Pneumatic High Speed Wheel Press; Chambersburg Engineering Company.

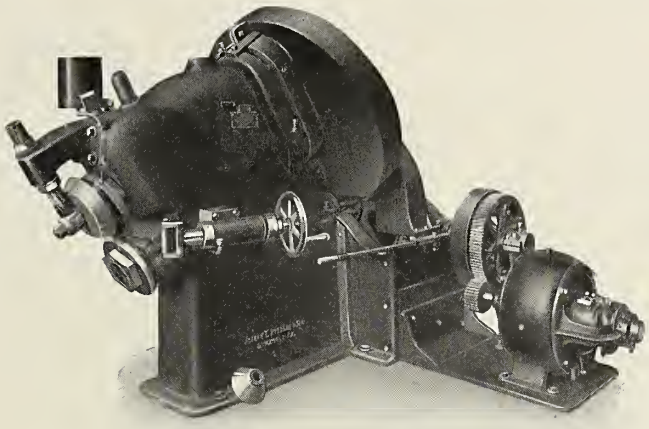

Fig. 2483—Lennox Rotary Bevel Shear; Joseph T. Ryerson & Son.

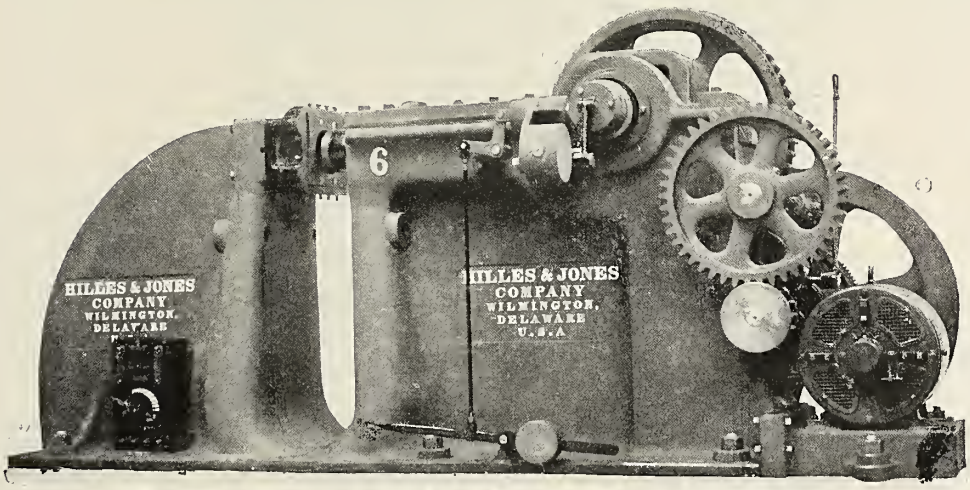

Fig. 2484—Motor Driven Throat Punch; Hilles & Jones Company.

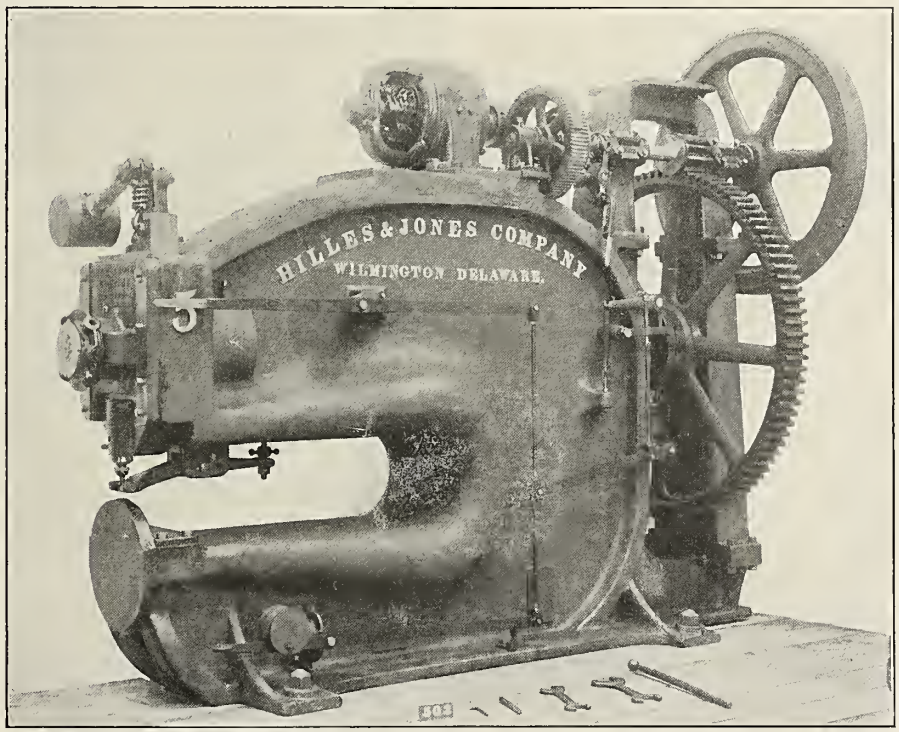

Fig. 2485—Deep Throat Punching Machine with Special Arrangement of Sliding Head and Jaw; Hilles & Jones Company.

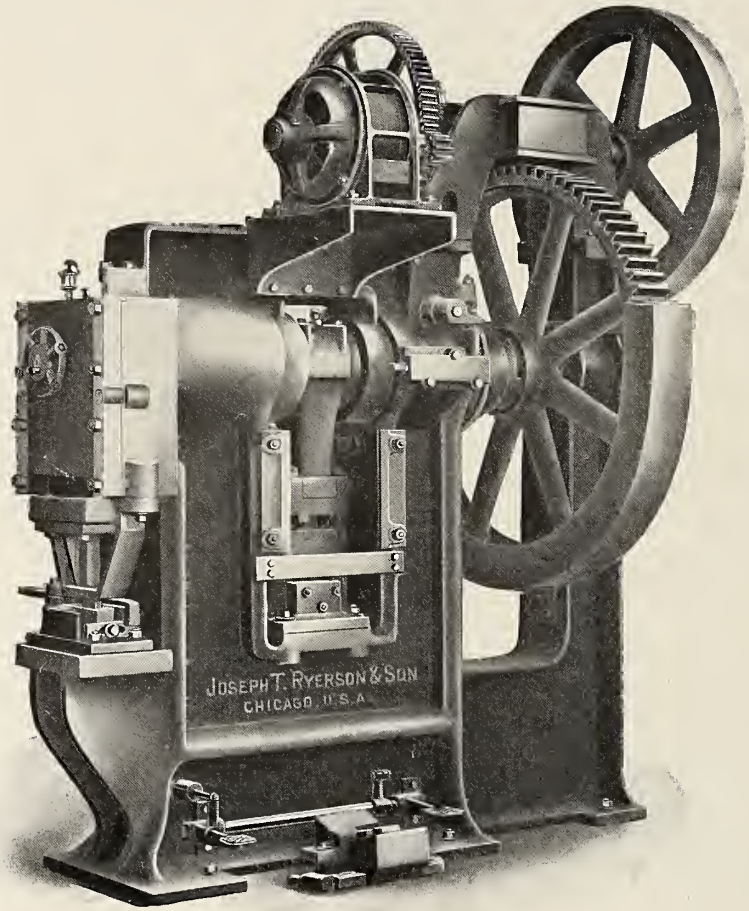

Fig. 2486—Combined Shear and Hot Punch for Spring Shop Service; Joseph T. Ryerson & Son.

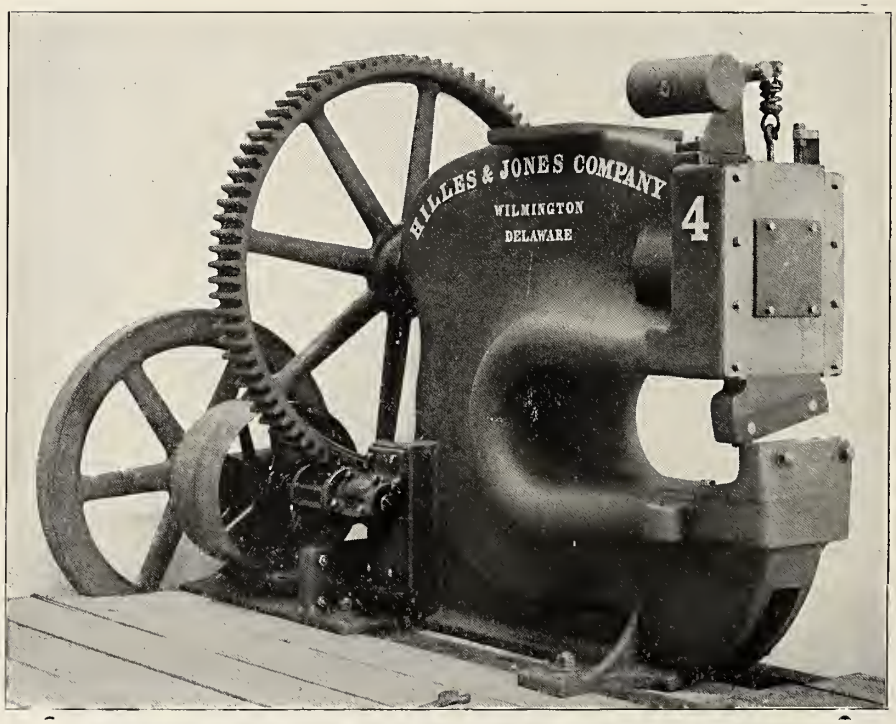

Fig. 2487—Flush Front Shearing Machine; Hilles & Jones Company.

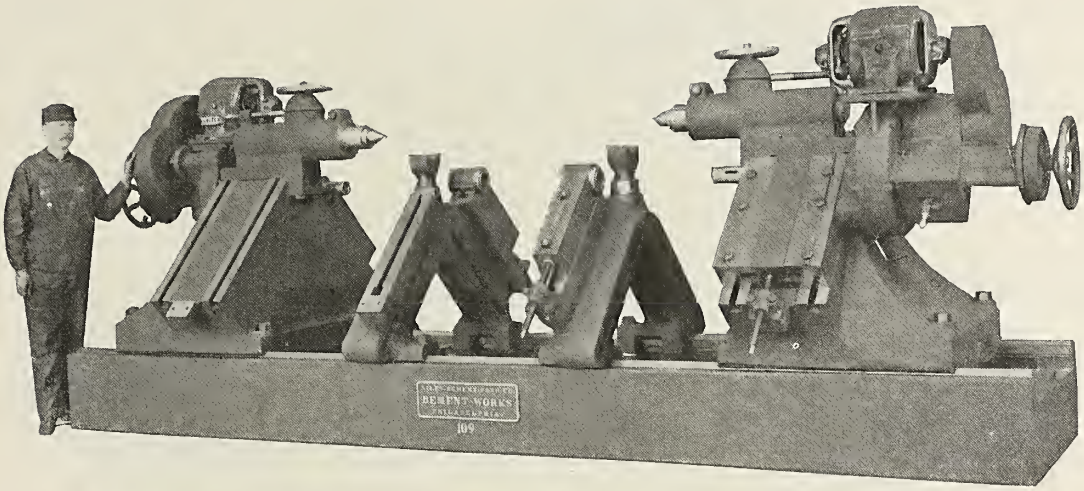

Fig. 2488—Bement Motor Driven Quartering Machine; Niles-Bement-Pond Company.

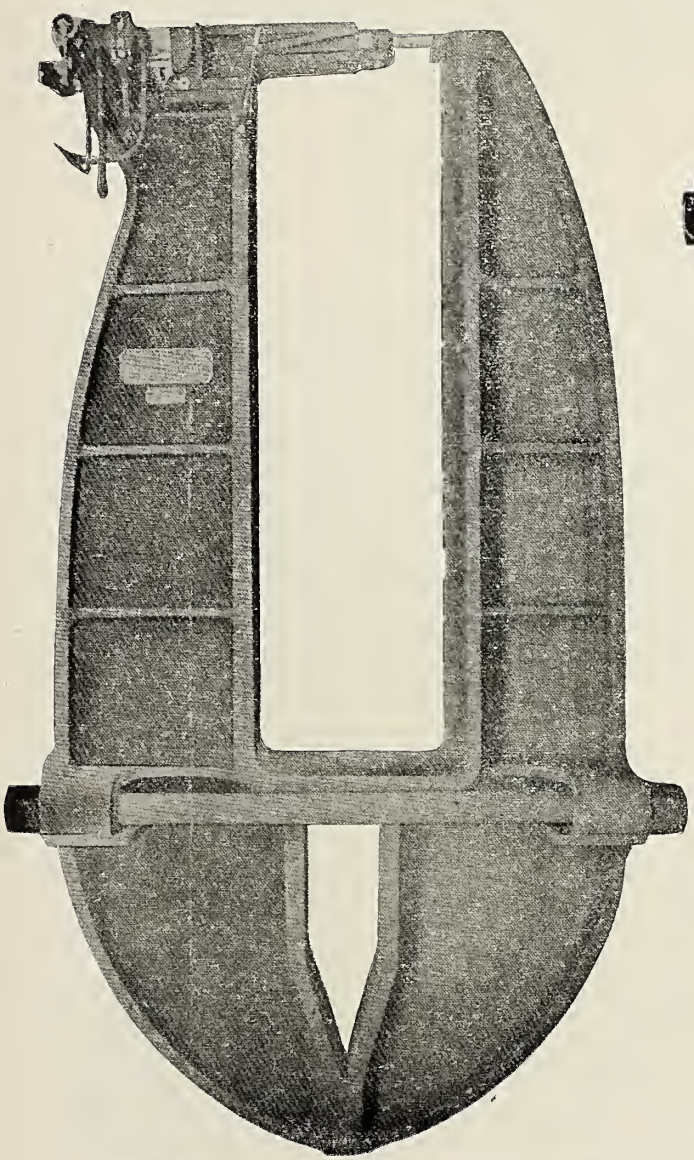

Fig. 2489—Hydraulic Riveter; Chambersburg Engineering Company.

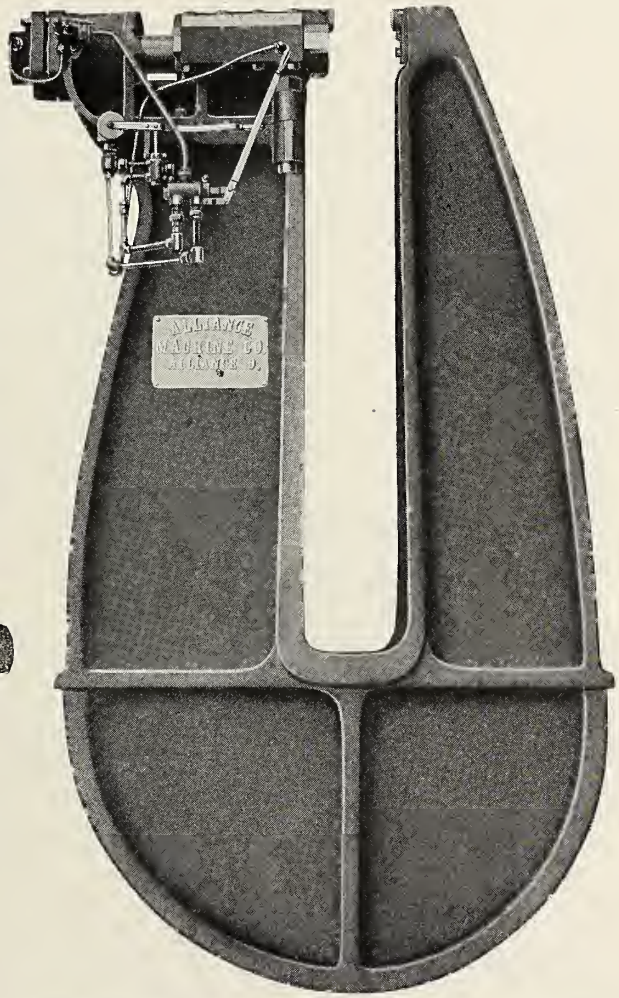

Fig. 2490—Hydraulic Triple Power Riveter; Alliance Machine Company.

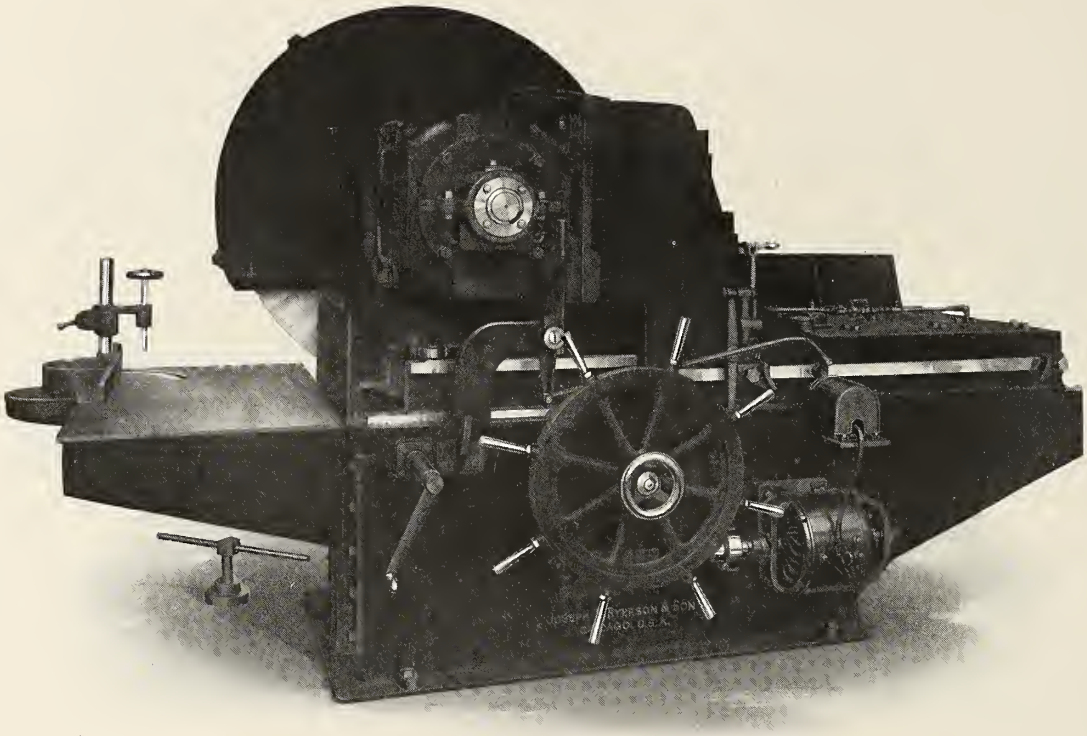

Fig. 2491—High Speed Friction Saw; Joseph T. Ryerson & Son.

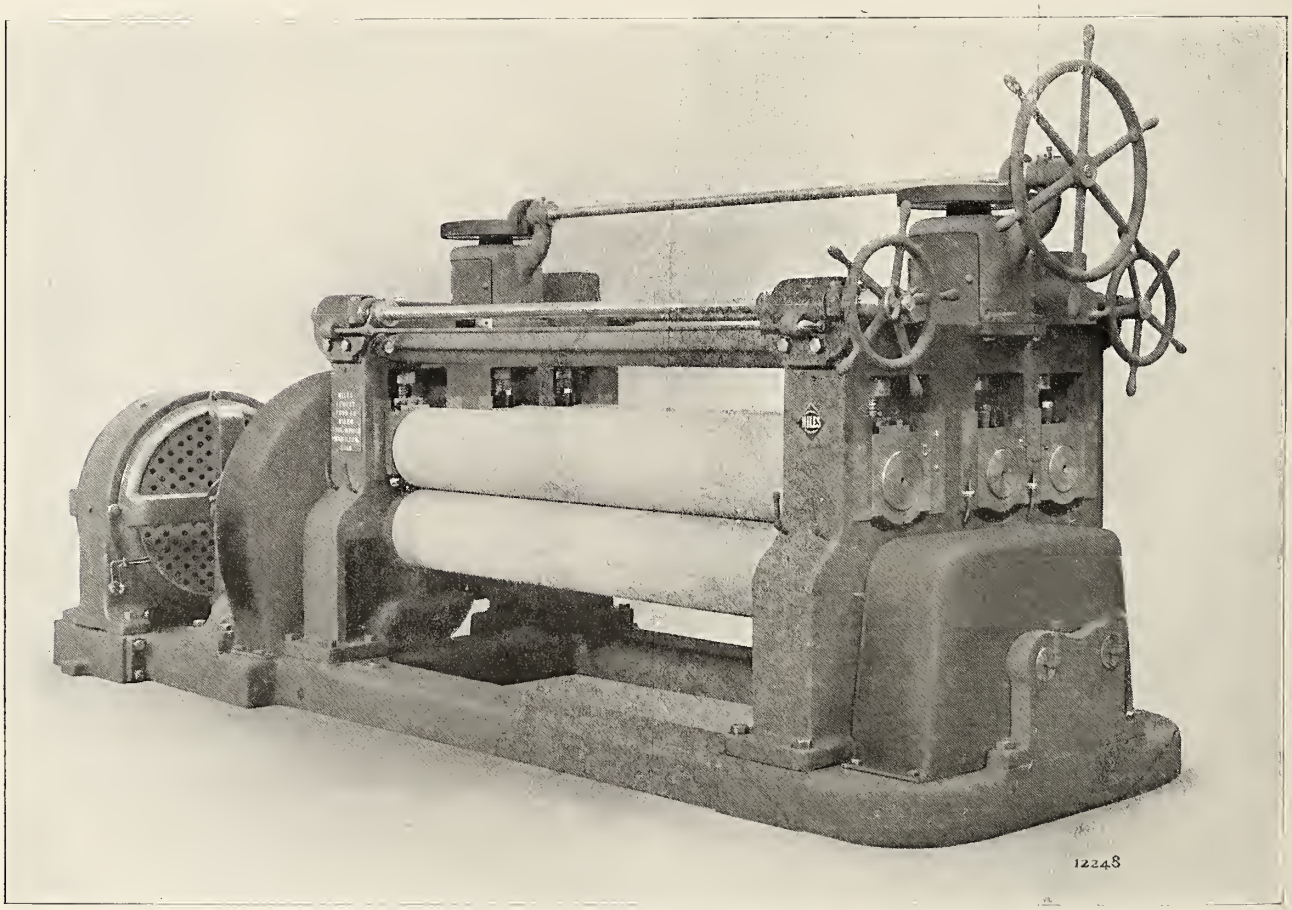

Fig. 2492—Niles Straightening Rolls; Niles-Bement-Pond Company.

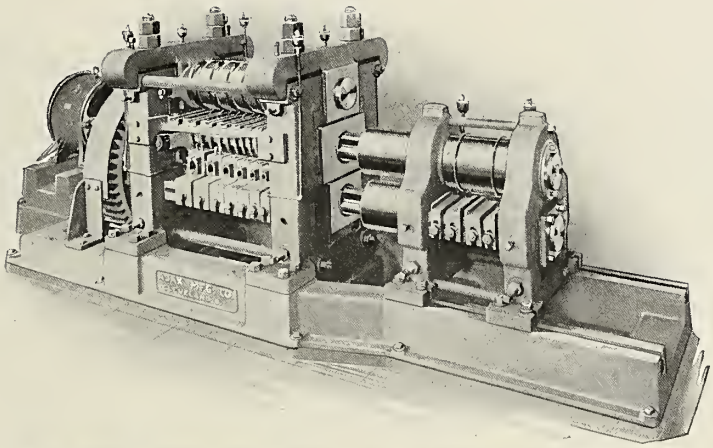

Fig 2493—Reclaiming Rolls; Ajax Manufacturing Company.

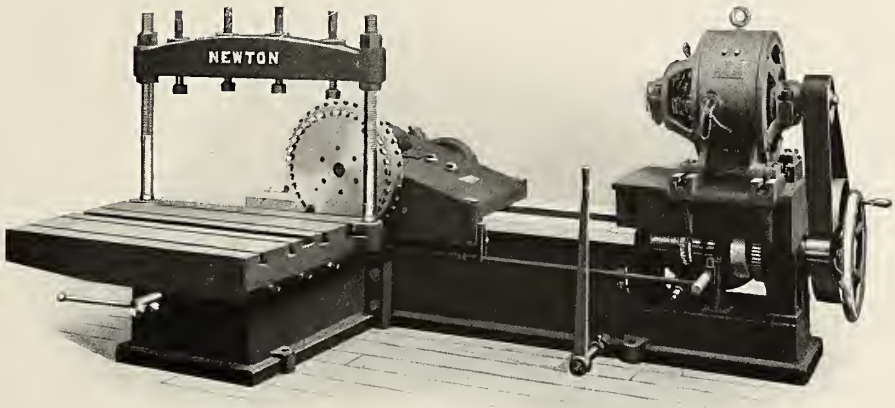

Fig. 2494—Cold Saw and Rotary Planer; Newton Machine Tool Works, Inc.

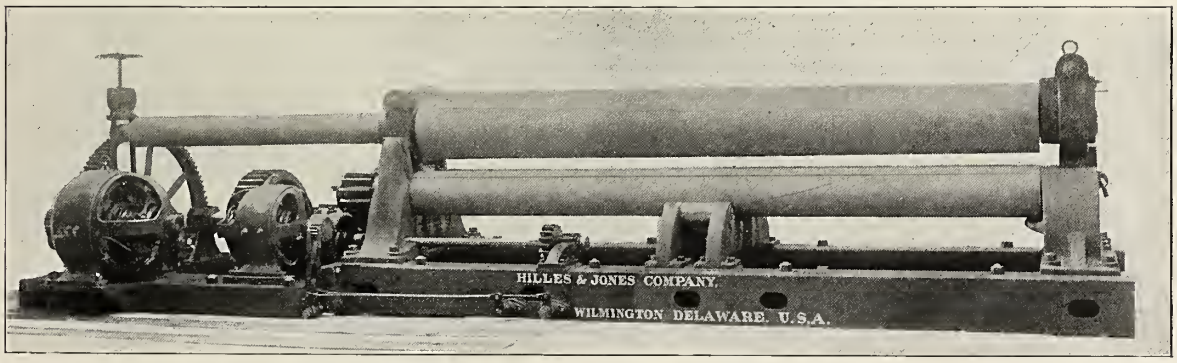

Fig. 2495—Heavy Plate Bending Rolls with Two Motors. One for Driving the Lower Rolls and the Other for Raising and Lowering the Top Rolls; Hilles & Jones Company.

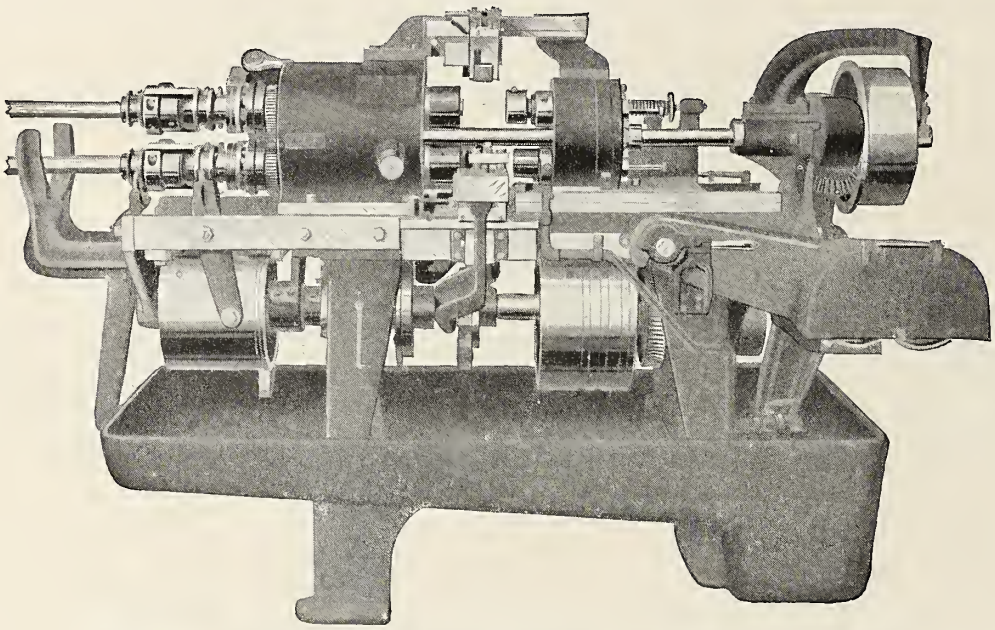

Fig. 2496—Automatic Screw Machine; National-Acme Manufacturing Company.

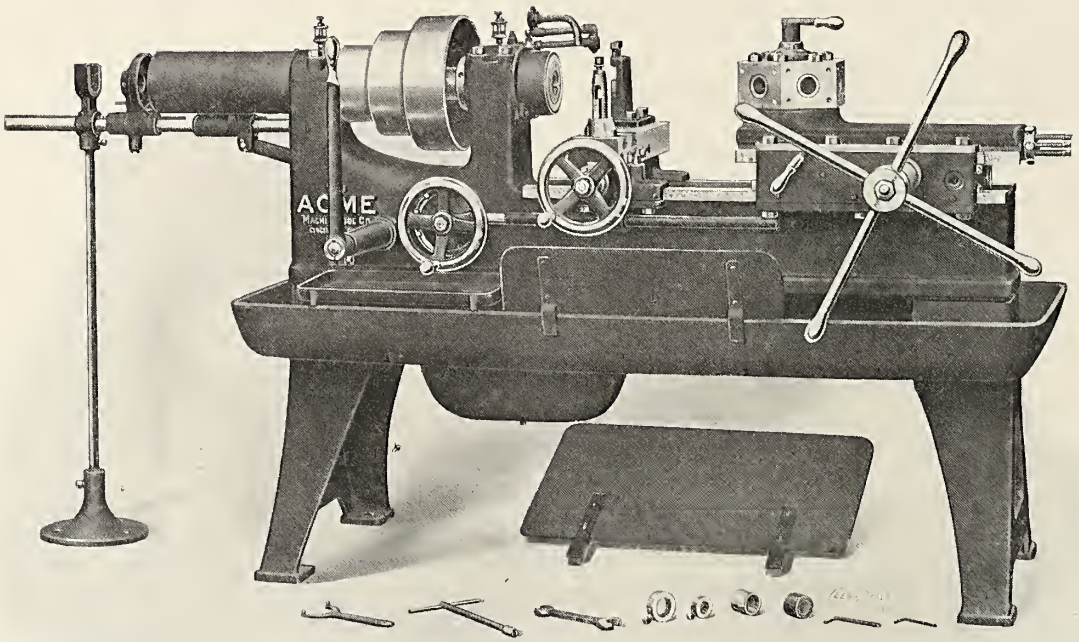

Fig. 2497—Plain Head Screw Machine; Acme Machine Tool Company.

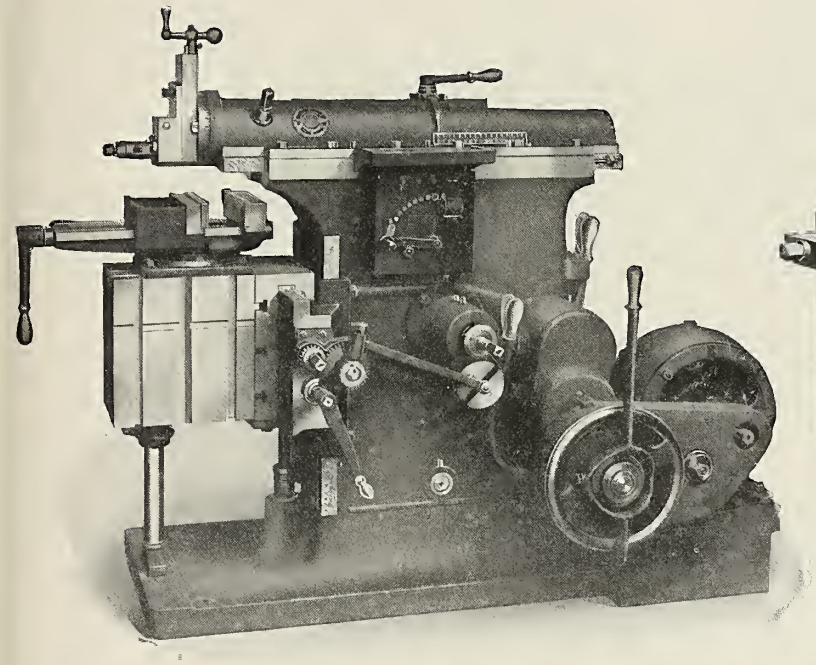

Fig. 2498—Rockford Constant Speed Motor Driven Shaper; Joseph T. Ryerson & Son.

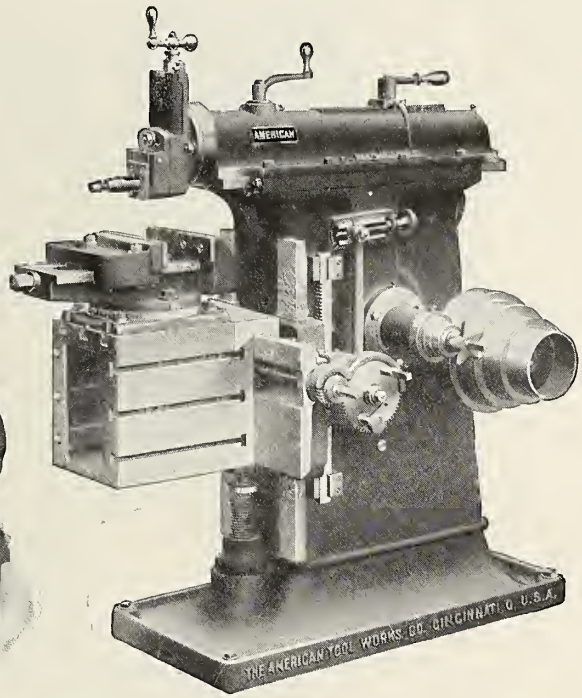

Fig. 2499—Single Geared 15 in. Shaper; American Tool Works Company.

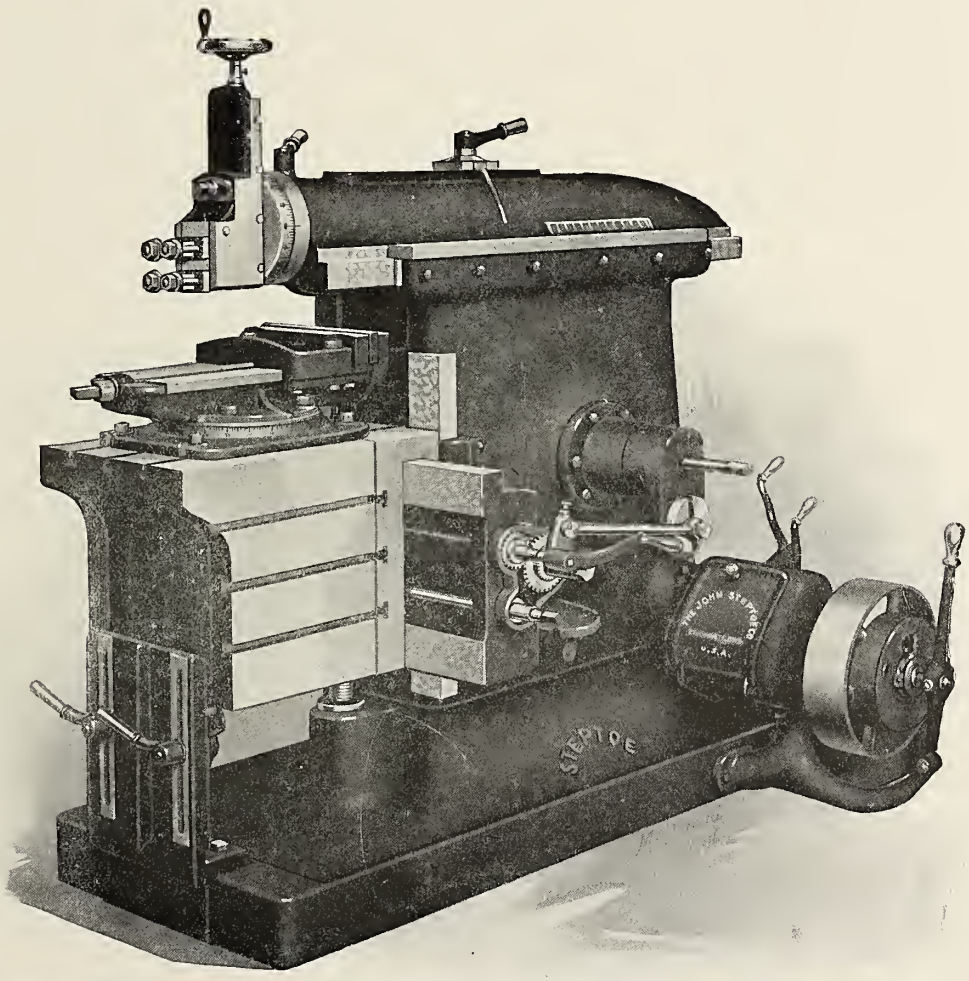

Fig. 2500—24 in. Shaper with Single Pulley Drive and Speed Box; John Steptoe Company.

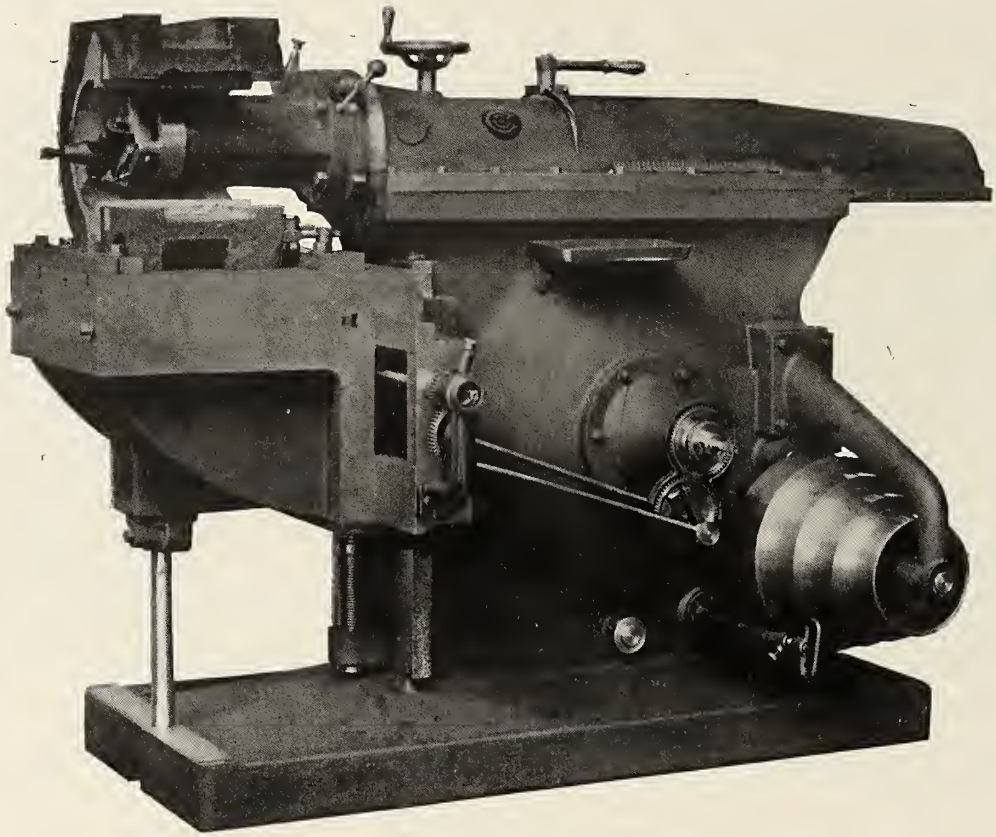

Fig. 2501—32 in. Crank Shaper; Cincinnati Shaper Company.

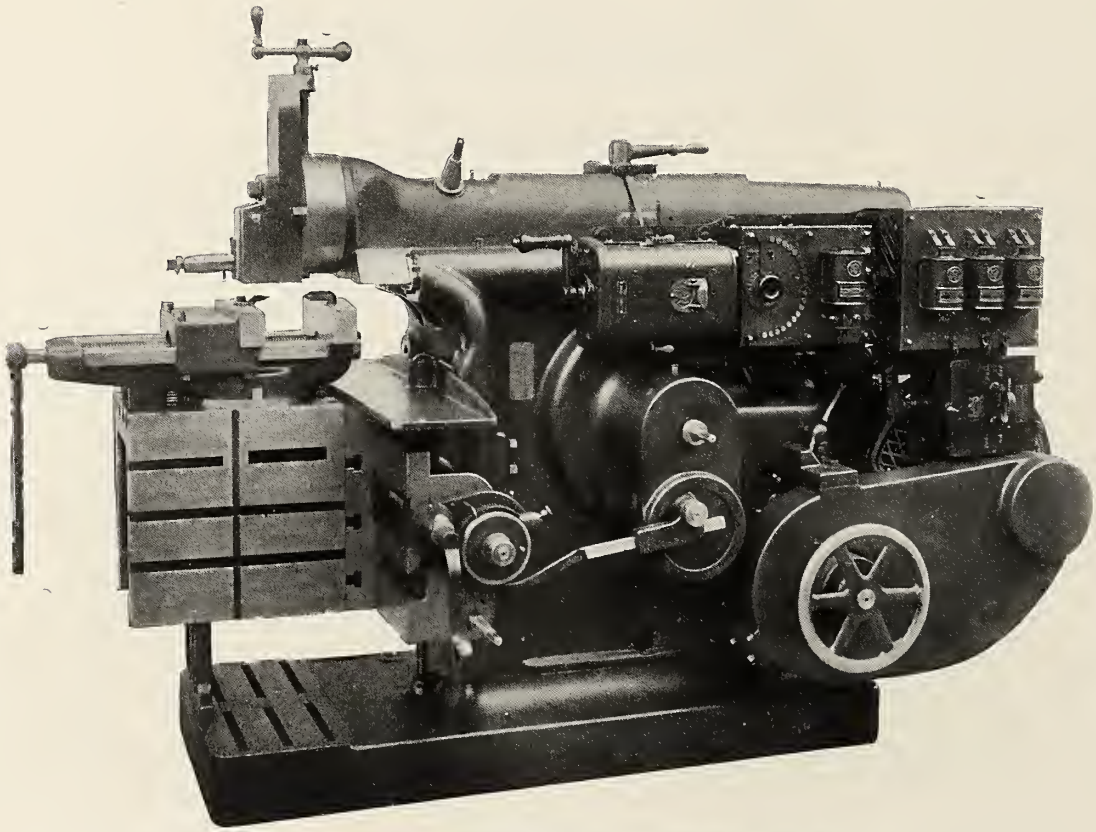

Fig. 2502—28 in. Invincible Shaper; Gould & Eberhardt.

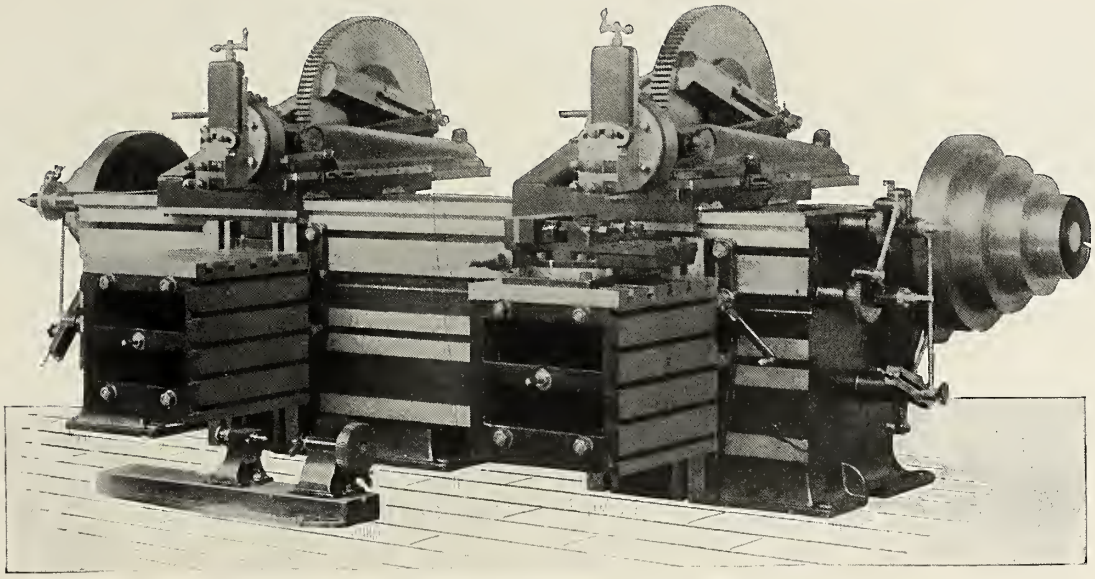

Fig. 2503—Double Head Traverse Shaper; Cincinnati Shaper Company.

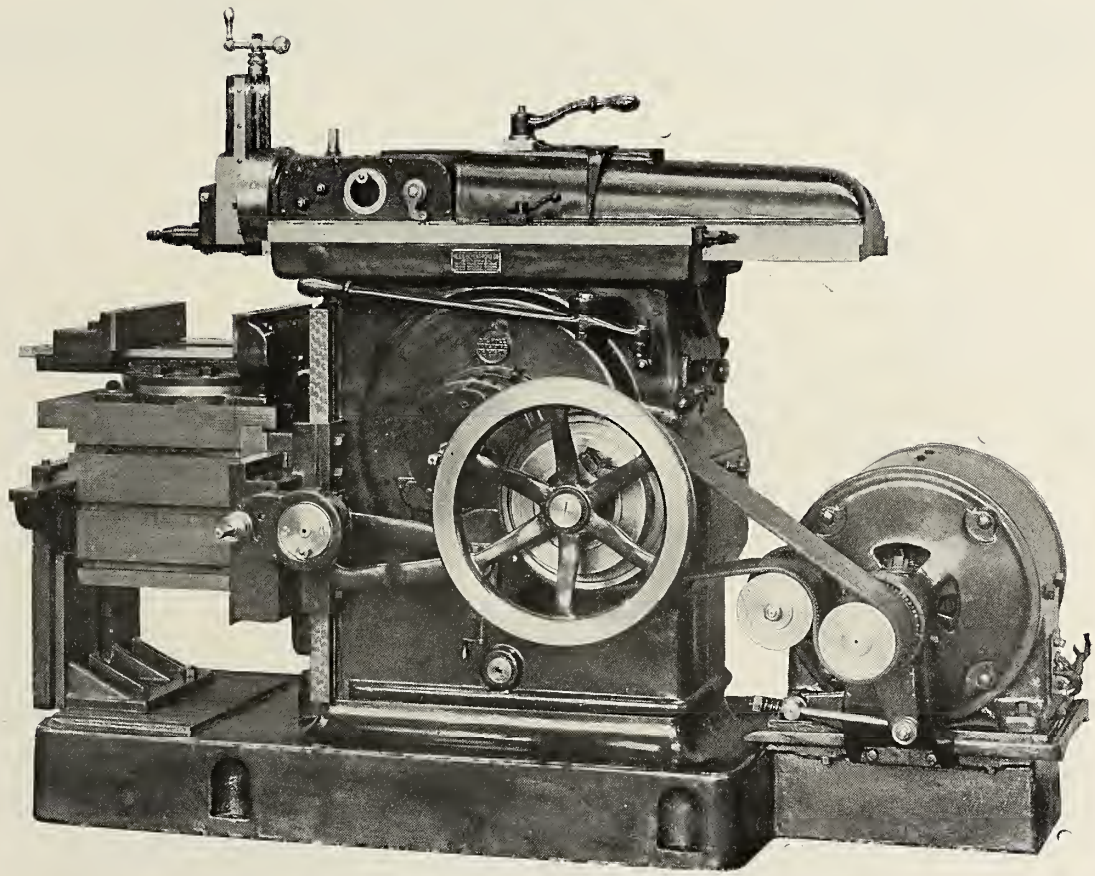

Fig. 2504—20 in. Crank Shaper; Stockbridge Machine Company.

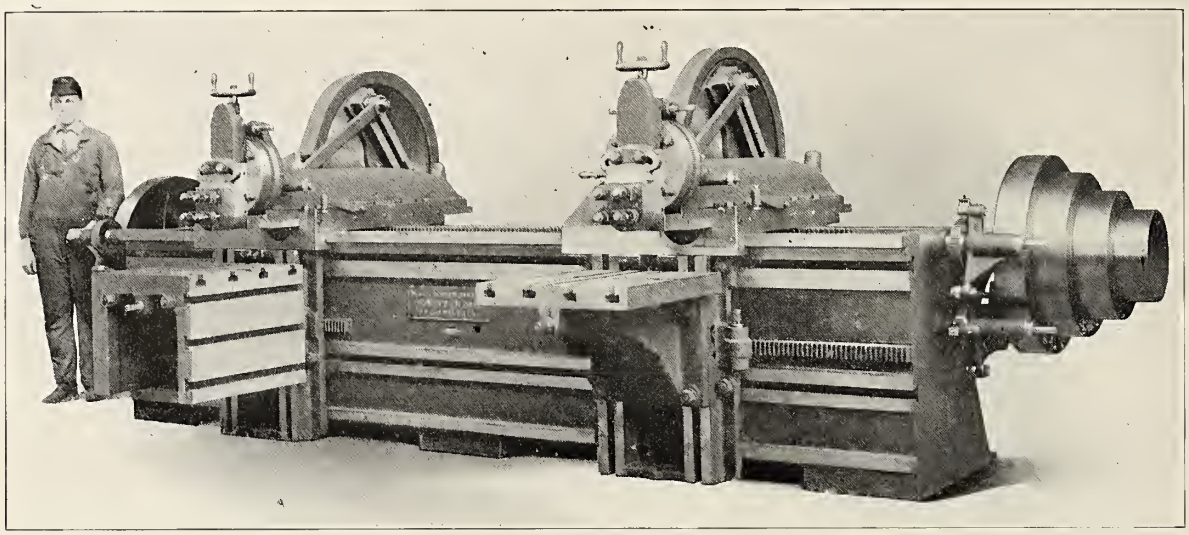

Fig. 2505—Bement Double Head Shaping Machine; Niles-Bement-Pond Company.

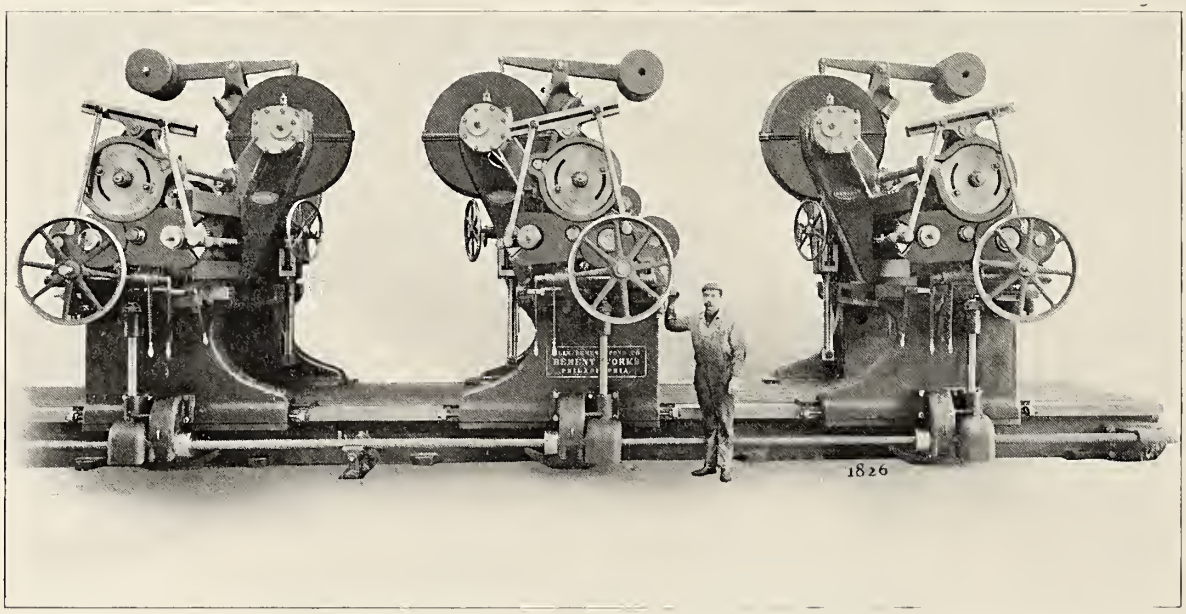

Fig. 2506—Bement Triple Head Locomotive Frame Slotting Machine; Niles-Bement-Pond Company.

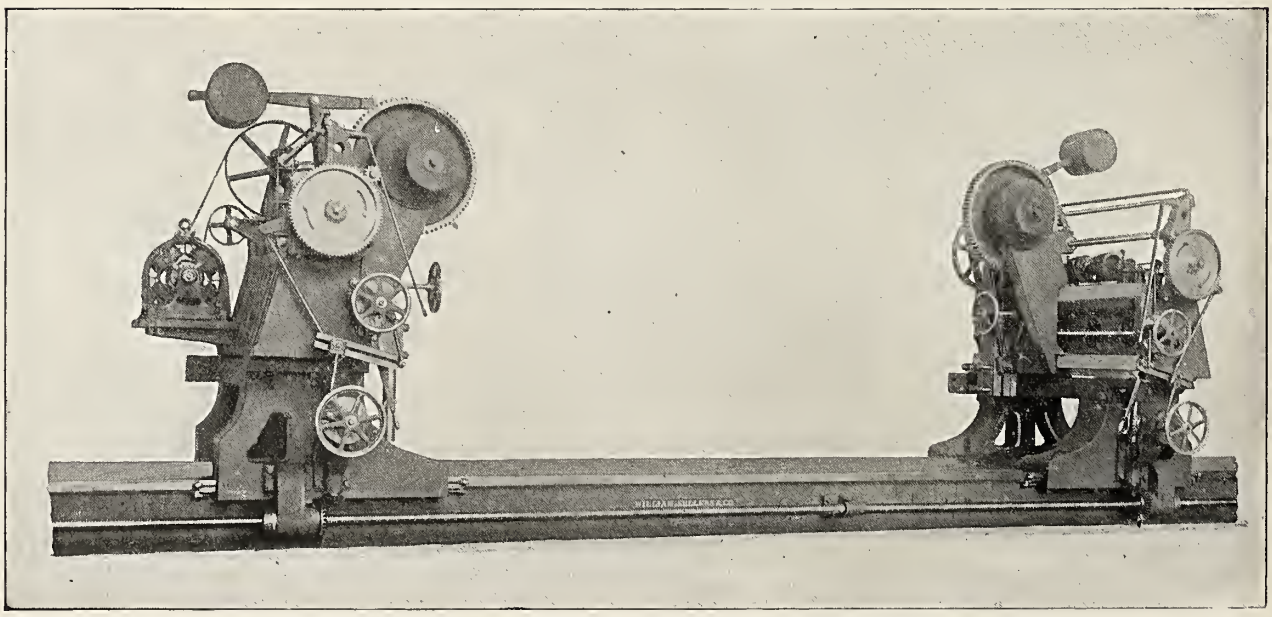

Fig. 2507—Double Head Frame Slotting Machine; William Sellers & Company, Inc.

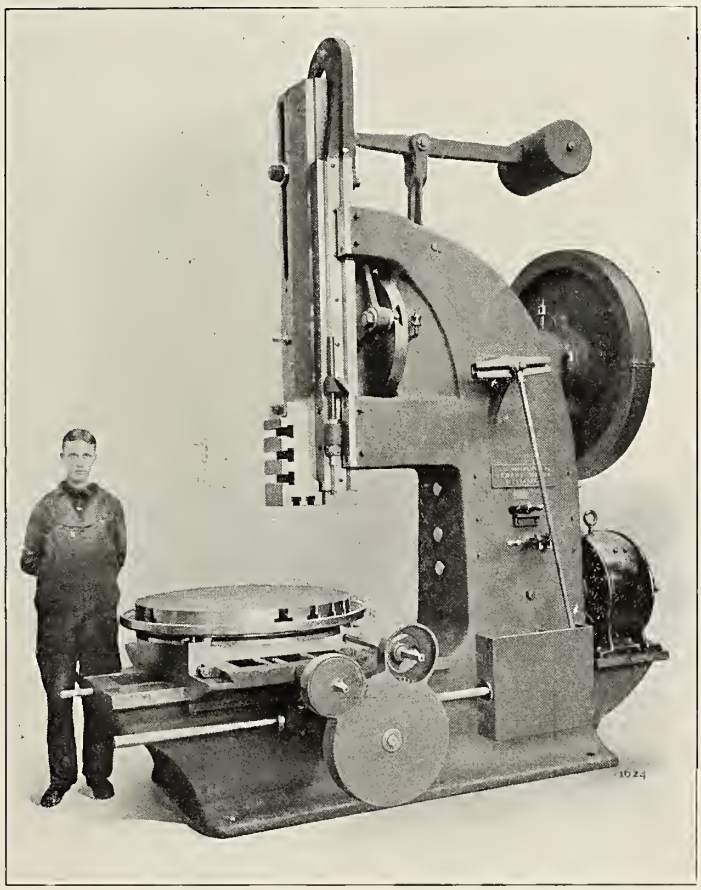

Fig. 2508—Bement 22 in. Crank Slotting Machine; Niles-Bement-Pond Company.

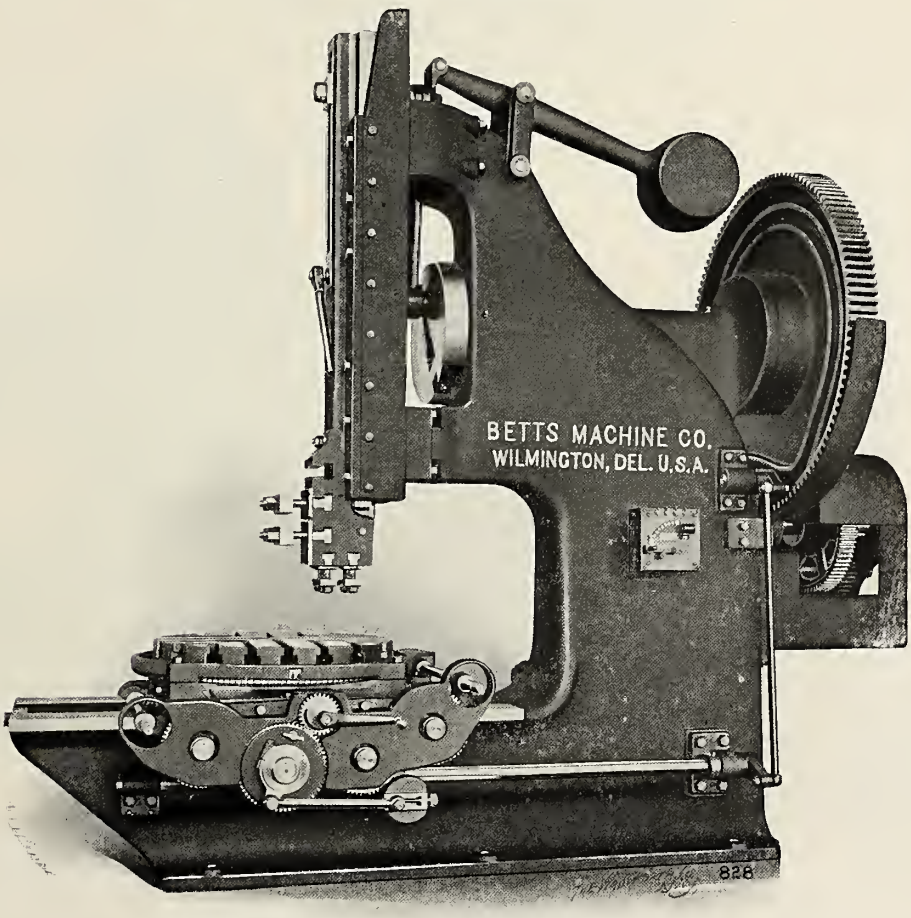

Fig. 2509—Slotter, 15 in.; Betts Machine Company.

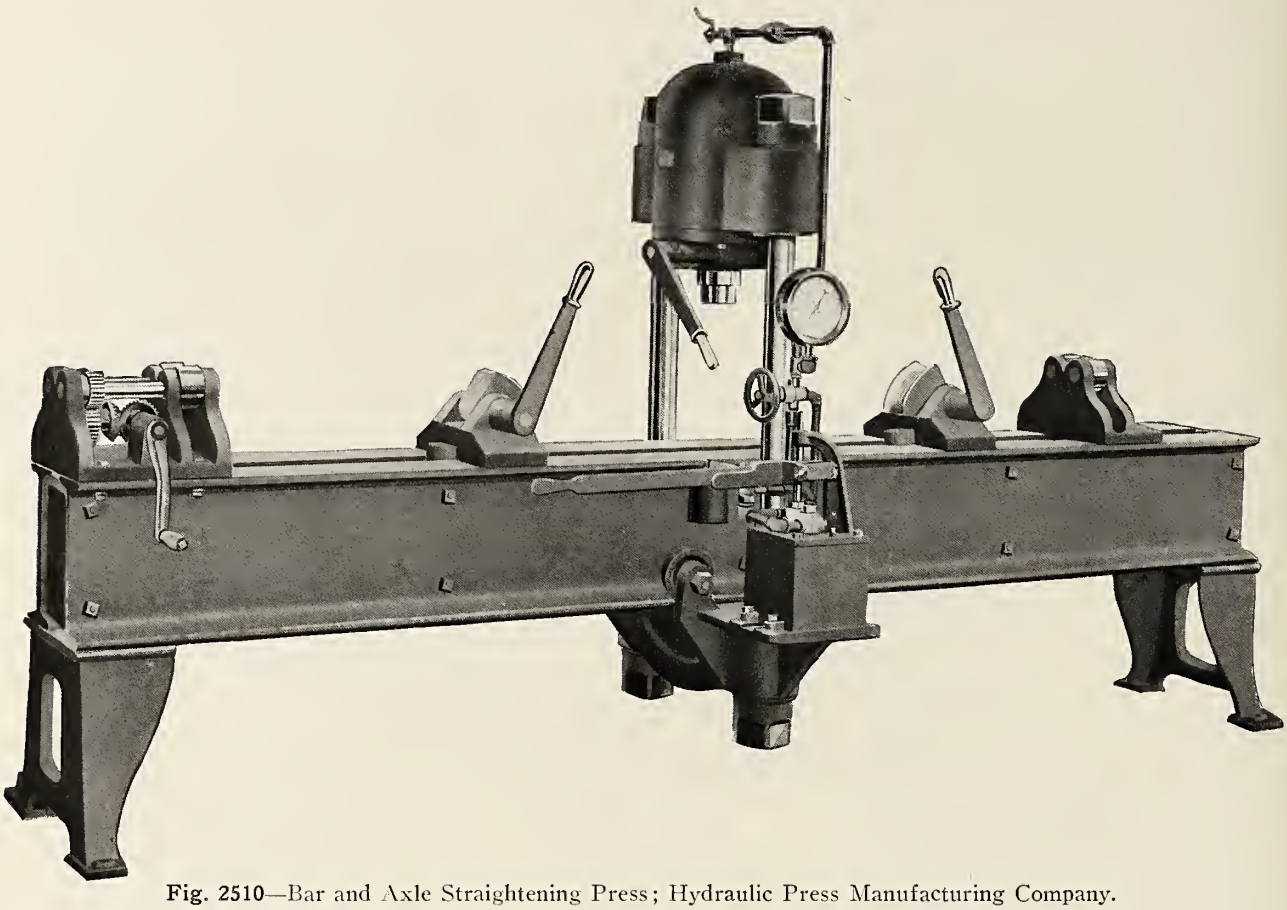

Fig. 2510—Bar and Axle Straightening Press; Hydraulic Press Manufacturing Company.

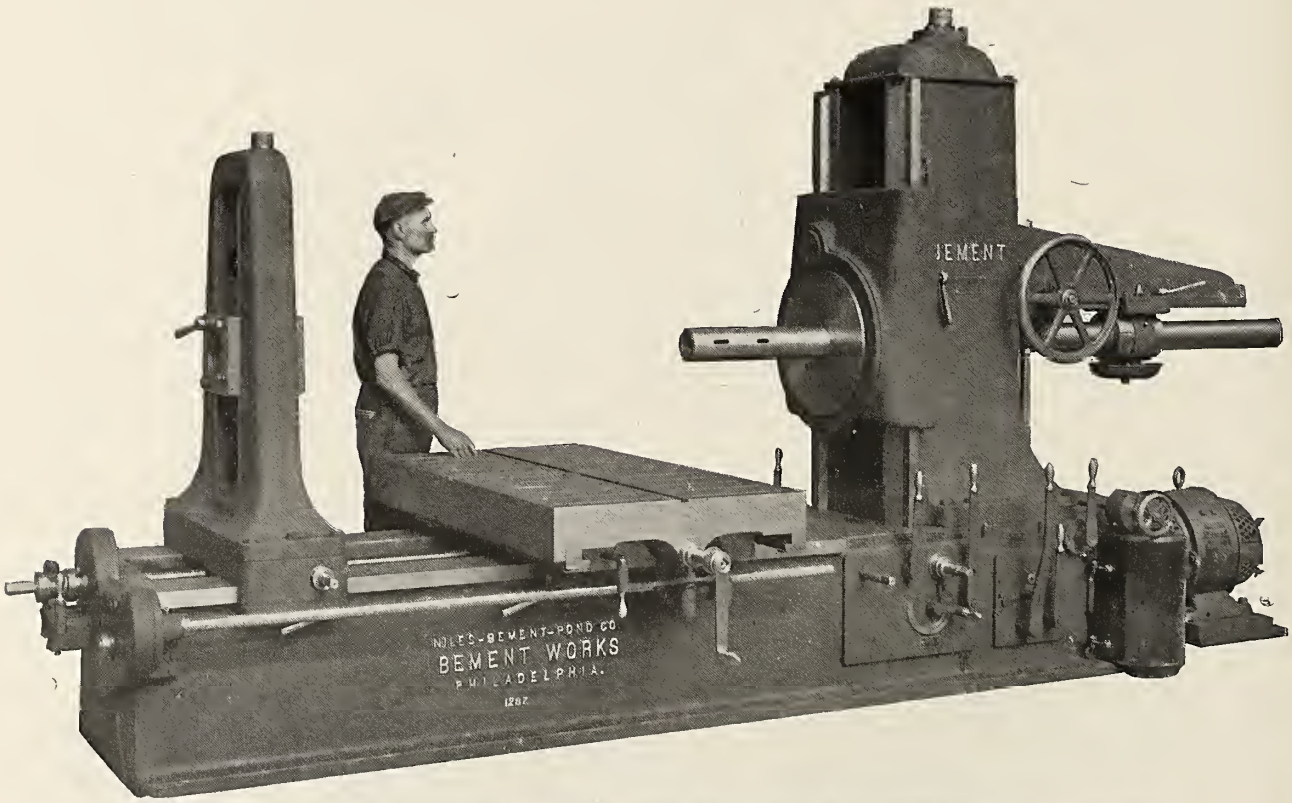

Fig. 2511—Bement 60 in. Horizontal Boring, Drilling and Milling Machine with Duplex Control; Niles-Bement-Pond Company.

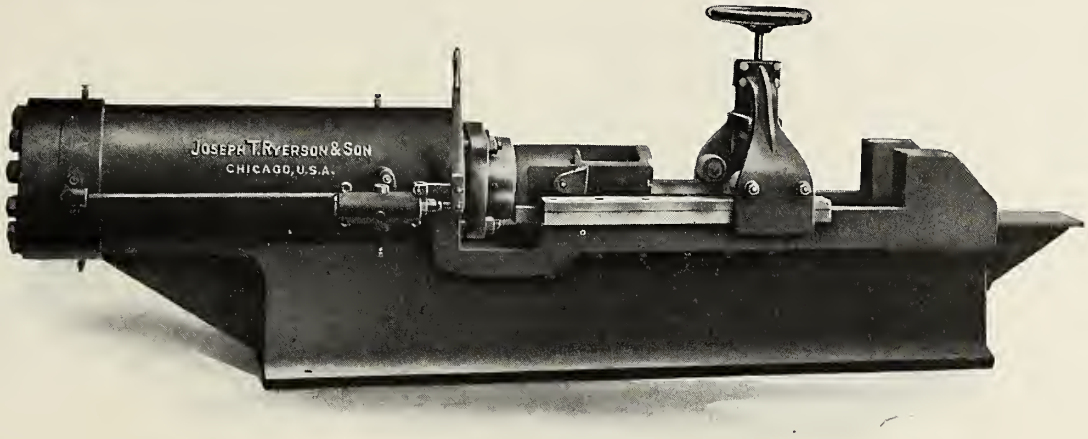

Fig. 2512—Hydraulic Spring Stripping Machine; Joseph T. Ryerson & Son.

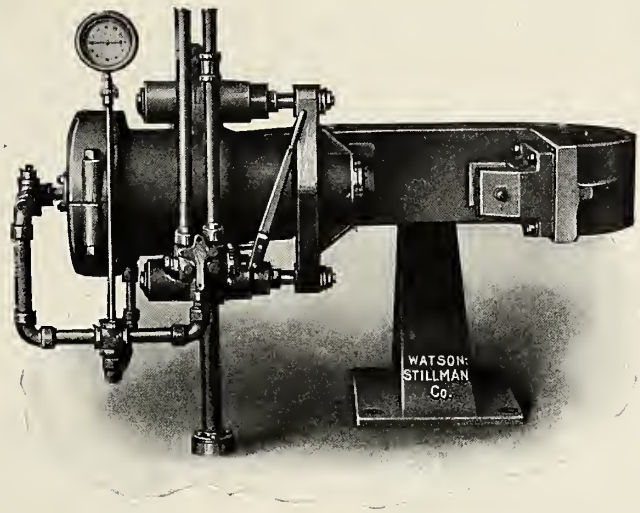

Fig. 2513—Hydraulic Coupler Shear and Riveter; Watson-Stillman Company.

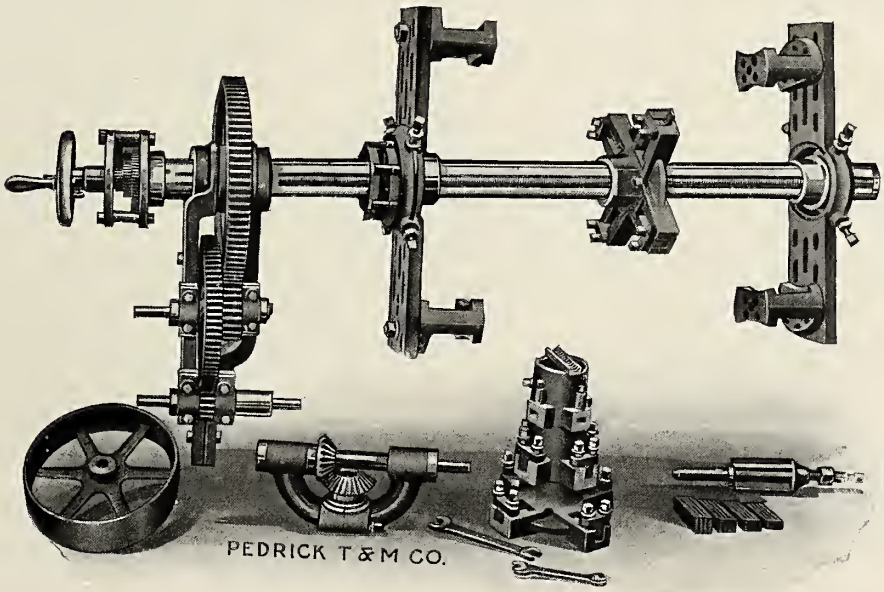

Fig. 2514—Cylinder and Valve Chamber Boring Bar; Pedrick Tool and Machine Company.

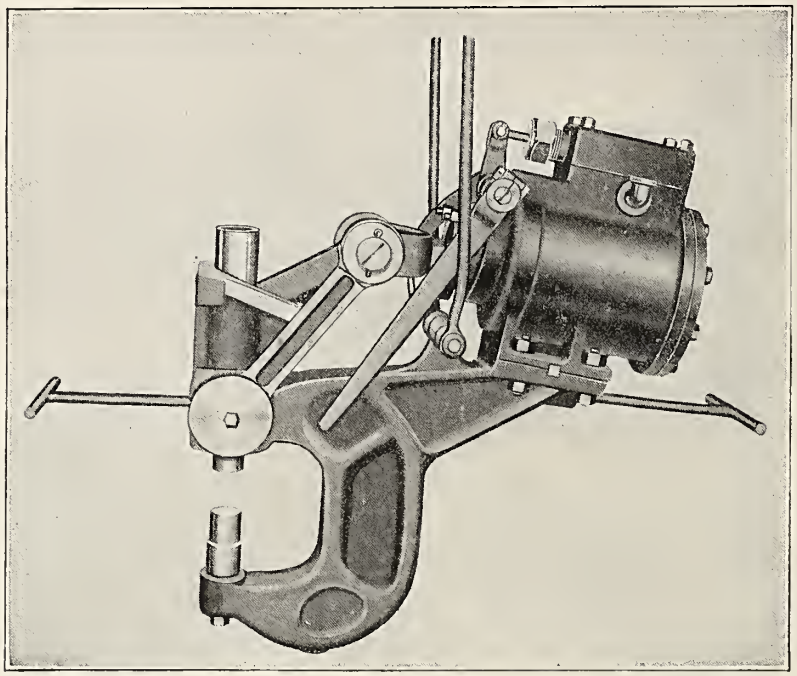

Fig. 2515—Yoke Riveter; Chicago Pneumatic Tool Company.

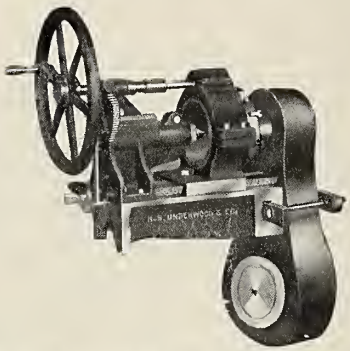

Fig. 2516—Crank Pin Turning Machine; H. B. Underwood & Company.

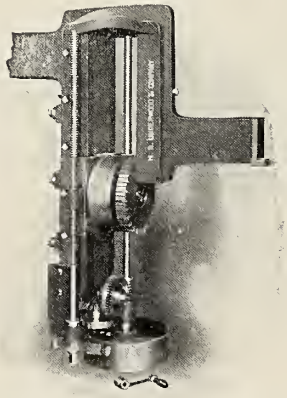

Fig. 2517—Pedestal Facing Machine; H. B. Underwood & Company.

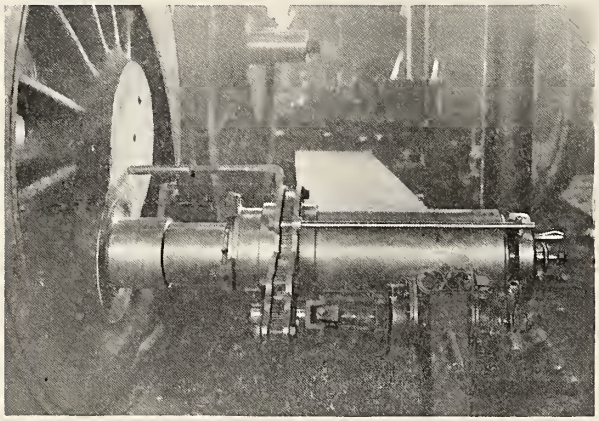

Fig. 2518—Crank Pin Truing Machine; Joseph T. Ryerson & Son.

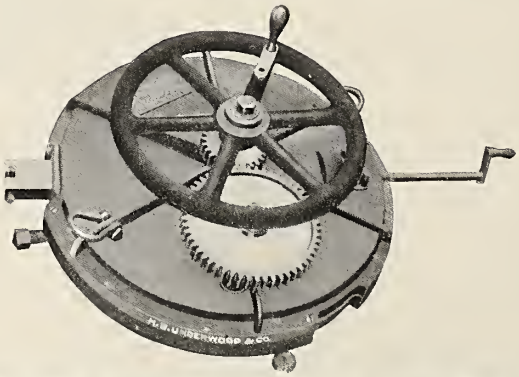

Fig. 2519—Locomotive Cylinder or Dome Facing Machine; H. B. Underwood & Company.

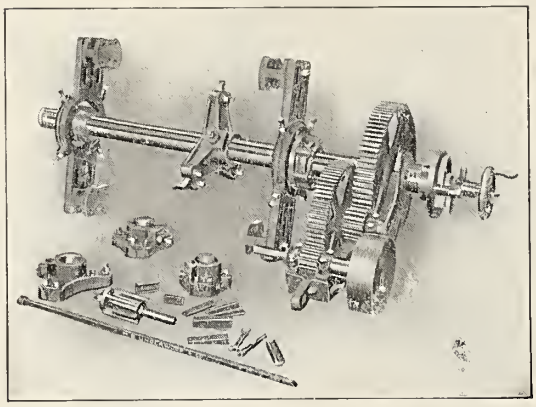

Fig. 2520—Portable Cylinder Boring Bar; H. B. Underwood & Company.

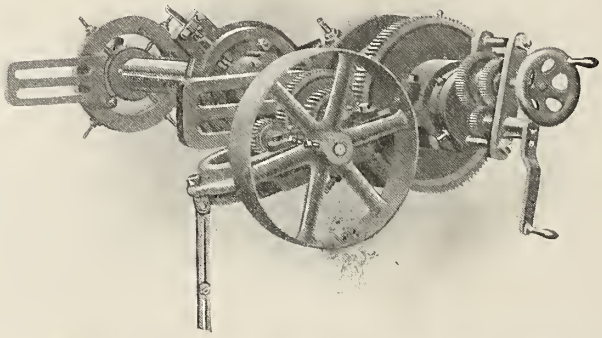

Fig. 2521—Portable Cylinder Boring Bar; Joseph T. Ryerson & Son.

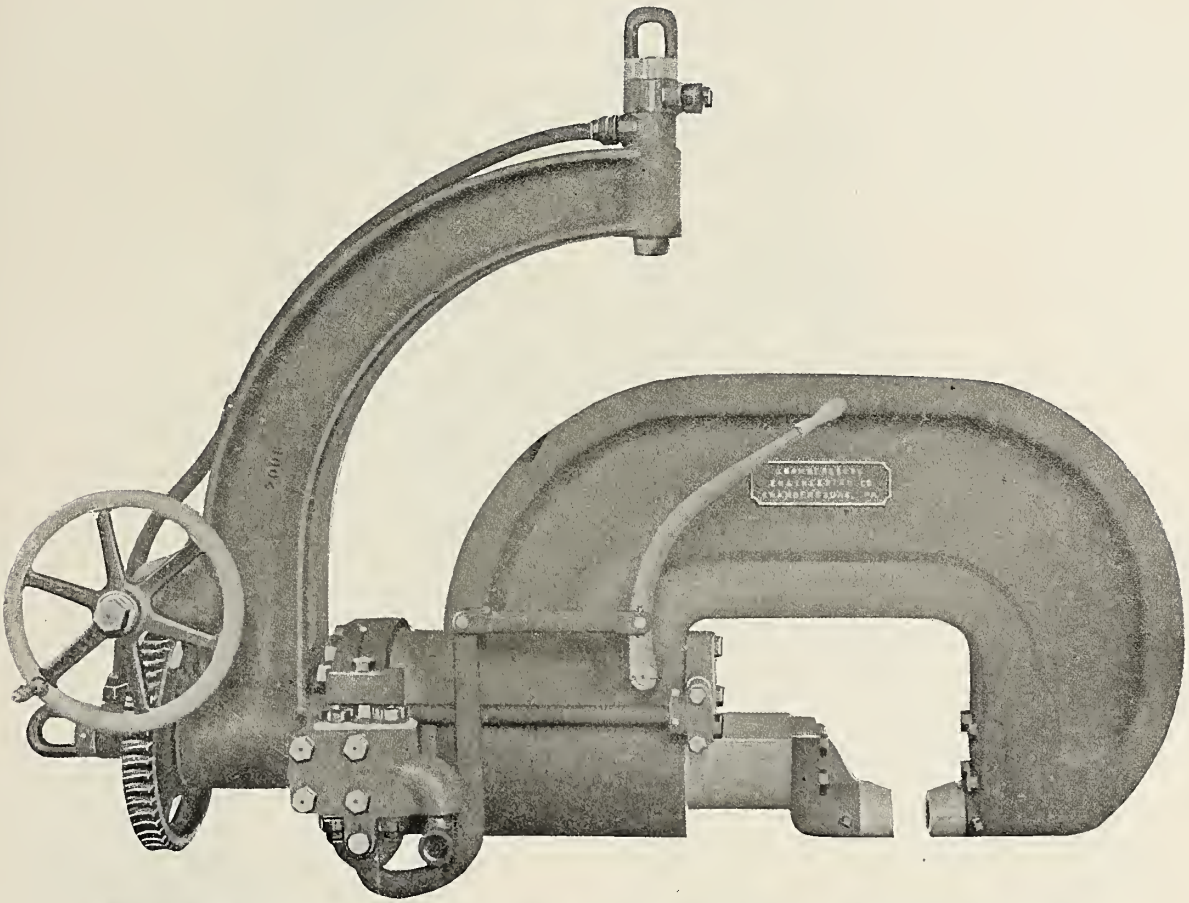

Fig. 2522—Portable Hydraulic Mud Ring Riveter; Chambersburg Engineering Company.

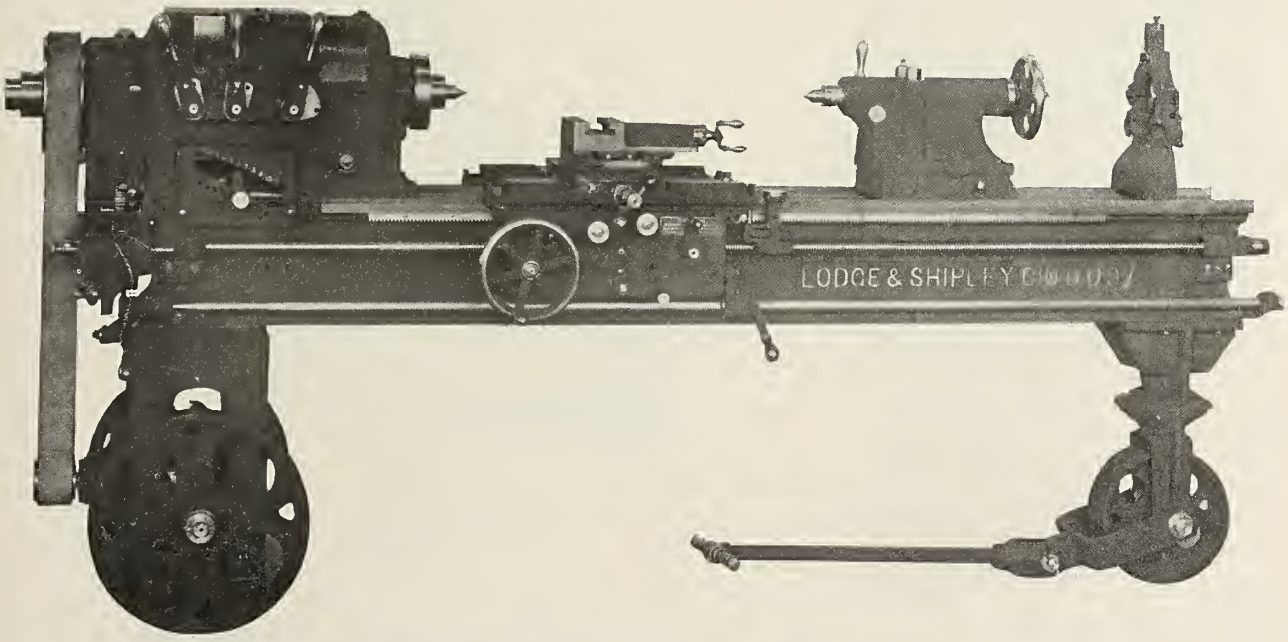

Fig. 2523—16 in. Portable Motor Driven Lathe; Lodge & Shipley Machine Tool Company.

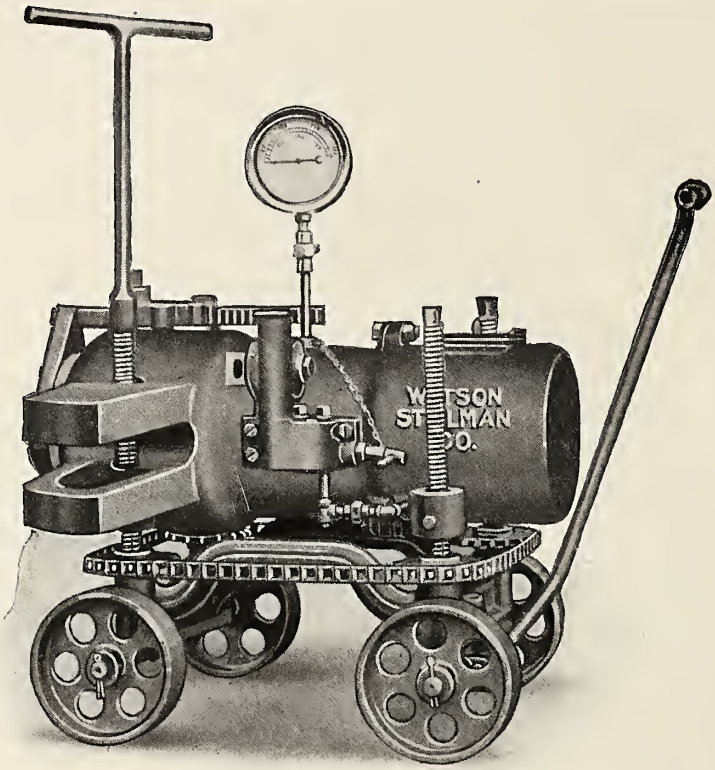

Fig. 2524—Crank Pin Press; Watson-Stillman Company.

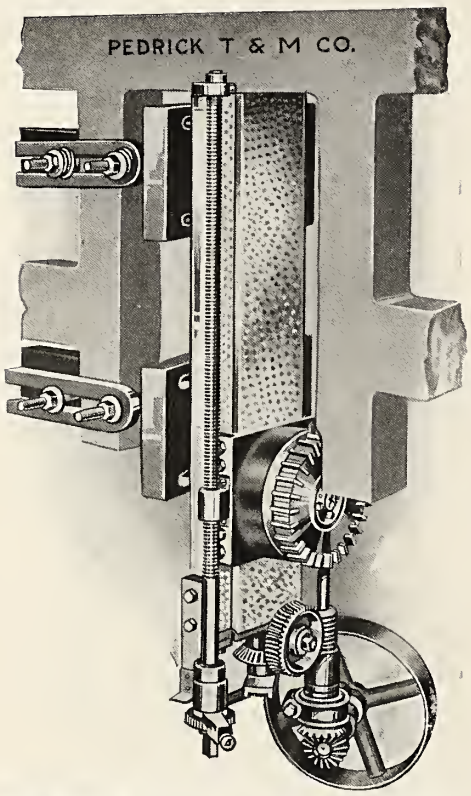

Fig. 2525—Pedestal Jaw Facer; Pedrick Tool & Machine Company.

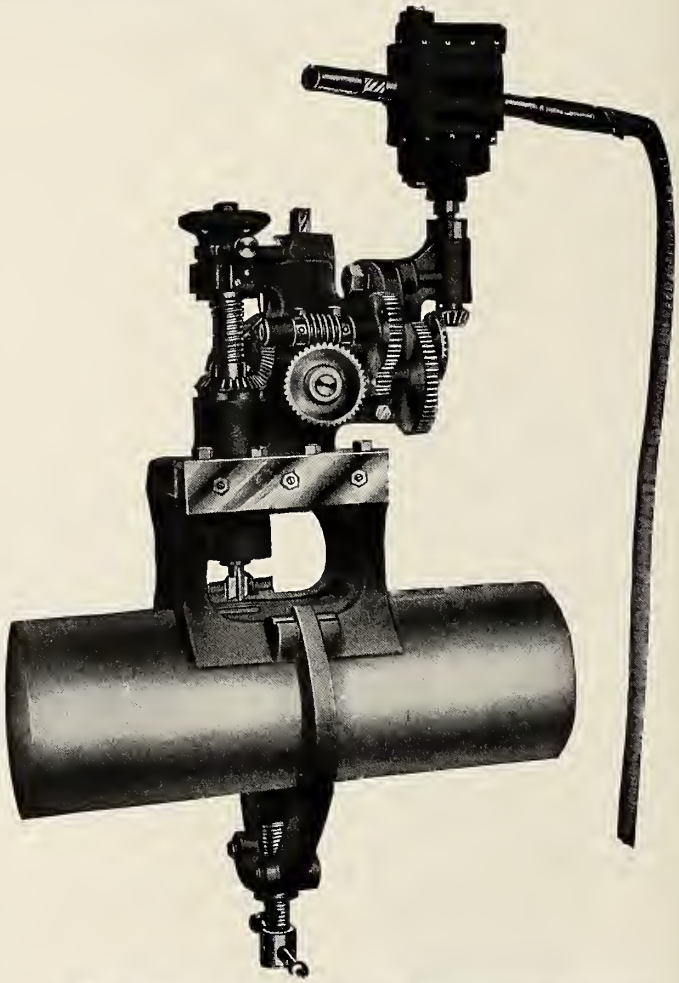

Fig. 2526—Portable Automatic Key Seating Machine; Joseph T. Ryerson & Son.

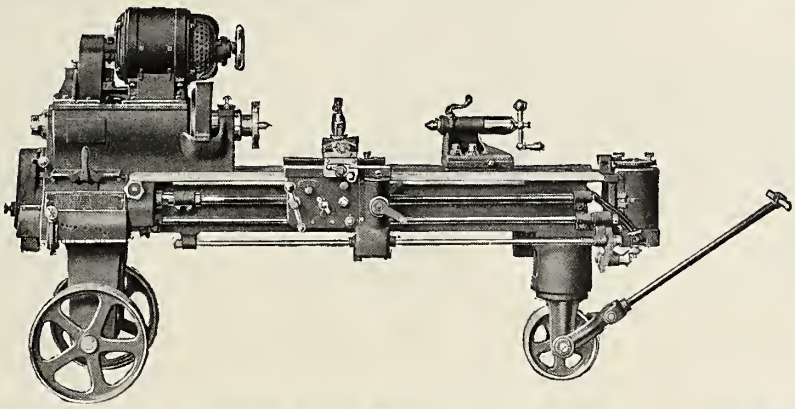

Fig. 2527—Reed 14 in. Portable Motor Driven Lathe; Manning, Maxwell & Moore.

Fig. 2528—Independent Pump Jack; Watson-Stillman Company.

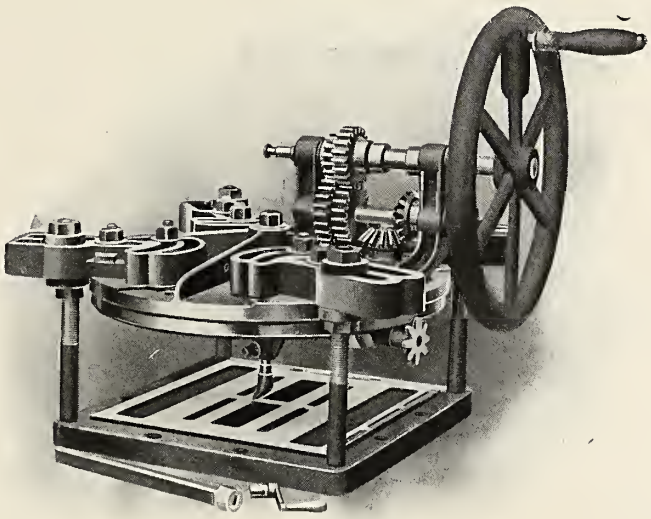

Fig. 2529—Portable Valve Seat Planing Machine; H. B. Underwood & Company.

Fig. 2530 — Broad Base Hydraulic Jack; Watson-Stillman Company.

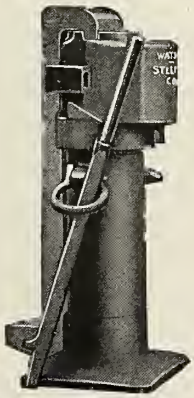

Fig. 2531—Hydraulic Jack; Watson-Stillman Company.

Fig. 2532—Low Hydraulic Jack; Watson-Stillman Company.

Fig. 2533 — Oblong Base Jack; Richard Dudgeon.

Fig. 2534 — Round Base Jack; Richard Dudgeon.

Fig. 2535—Elliptical Base Jack; Richard Dudgeon.

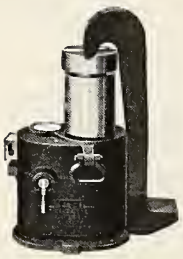

Fig. 2536—Horizontal Claw Jack; Richard Dudgeon.

Fig. 2537—Horizontal Claw Jack with Reinforced Cistern; Richard Dudgeon.

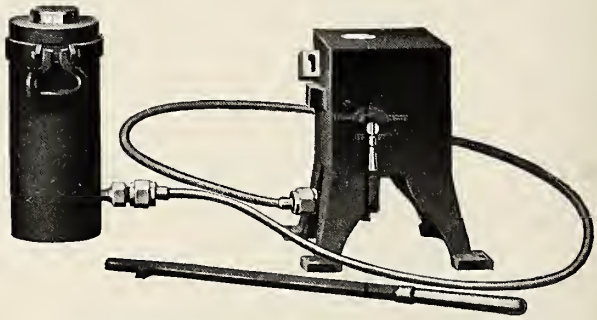

Fig. 2538—Independent Pump Jack; Richard Dudgeon.

Fig. 2539 — Reliance Hydraulic Jack, Wheel Base Pattern; Philip S. Justice & Company.

Fig. 2540 — Reliance Hydraulic Jack, Broad Round Base Pattern; Philip S. Justice & Company.

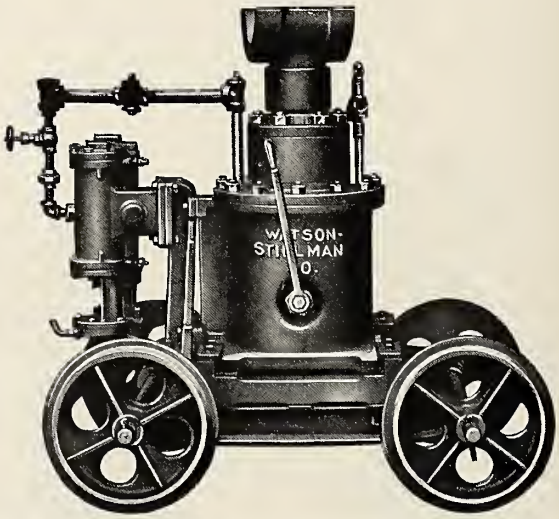

Fig. 2541—Hydro-Pneumatic Pit Jack; Watson-Stillman Company.

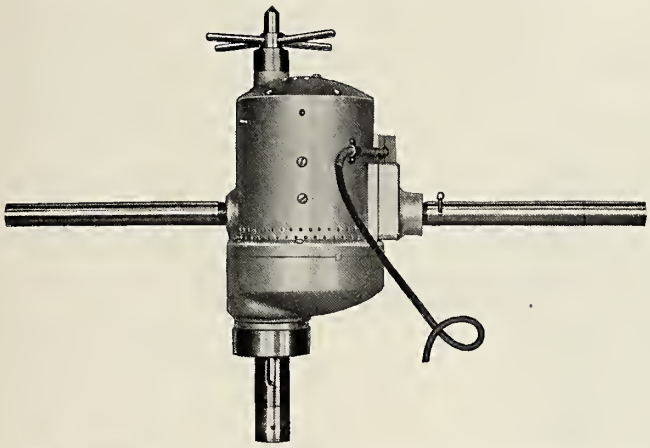

Fig. 2542—Heavy Duty Electric Drill; James Clark, Jr., Electric Company.

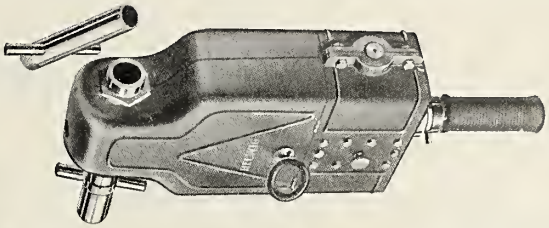

Fig. 2543—Close Quarter Reversible Flat Air Drill; Helwig Manufacturing Company.

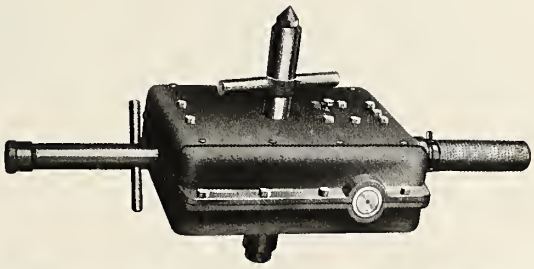

Fig. 2544—Central Spindle Reversible Air Drill; Helwig Manufacturing Company.

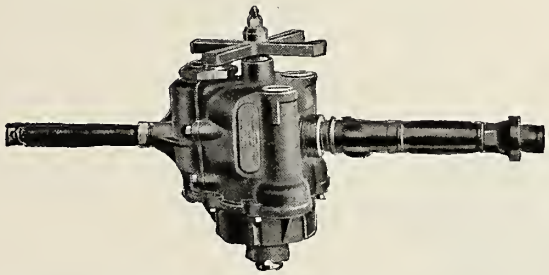

Fig. 2545—Non-Reversible Little David Air Drill; Ingersoll-Rand Company.

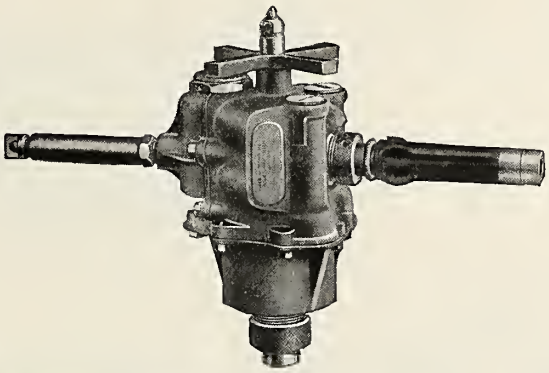

Fig. 2546—Compound Geared Little David Air Drill; Ingersoll-Rand Company.

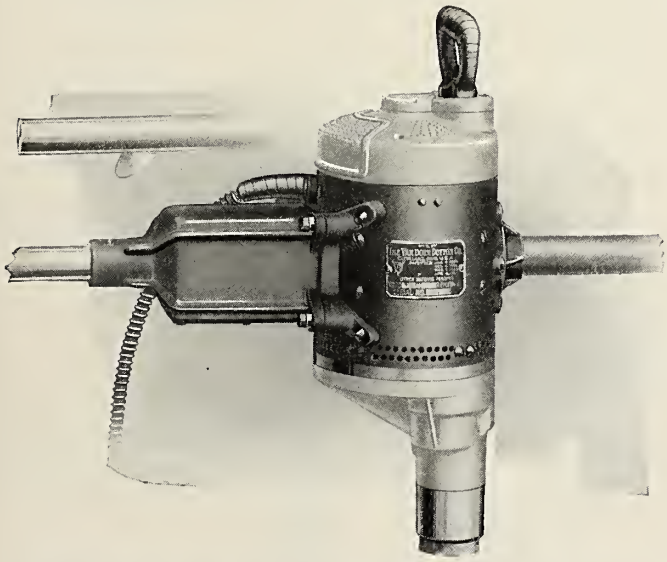

Fig. 2547—Type DC-3 Hard Service Electric Drill; Van Dorn Electric Tool Company.

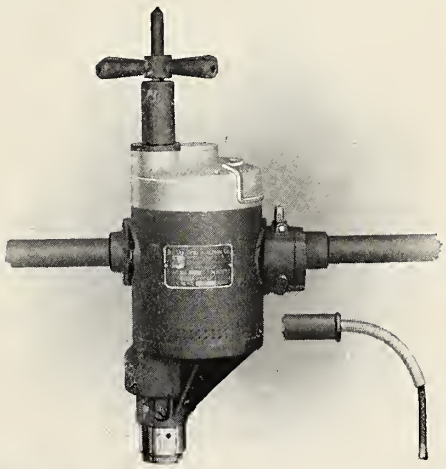

Fig. 2548—Type DC-2 Hard Service Electric Drill; Van Dorn Electric Tool Company.

Fig. 2549—Thor Electric Drill; Independent Pneumatic Tool Company.

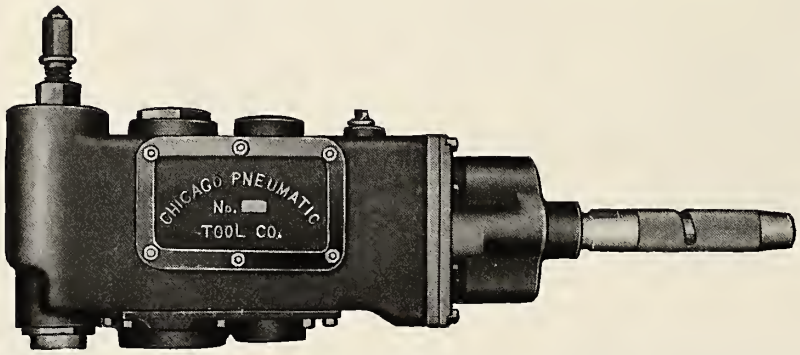

Fig. 2550—Little Giant Corner Air Drill; Chicago Pneumatic Tool Company.

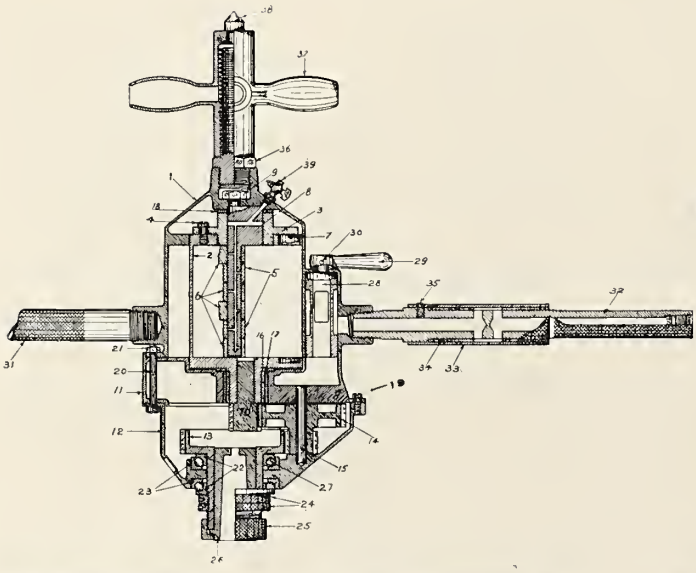

Fig. 2551—Rotary Air Drill; Keller Pneumatic Tool Company.

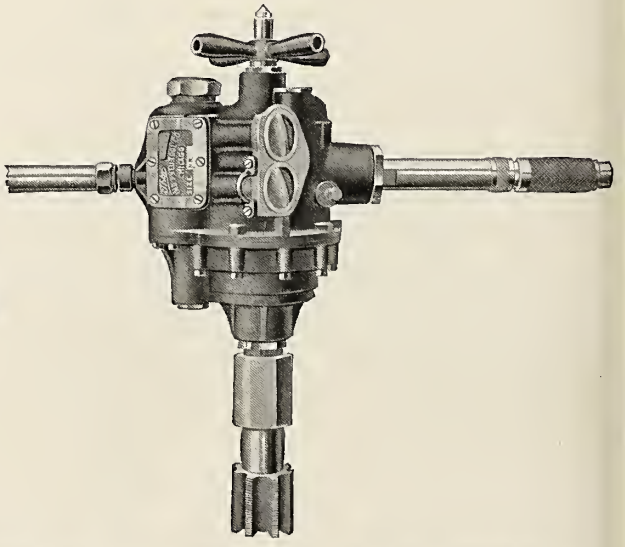

Fig. 2552—Thor Reversible Air Drill for Extra Heavy Work; Independent Pneumatic Tool Company.

Fig. 2553—Type DA-00 Hard Service Electric Drill; Van Dorn Electric Tool Company.

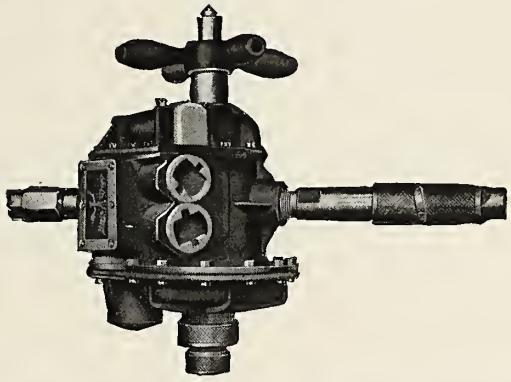

Fig. 2554—Improved Little Giant Ball Bearing Air Drill; Chicago Pneumatic Tool Company.

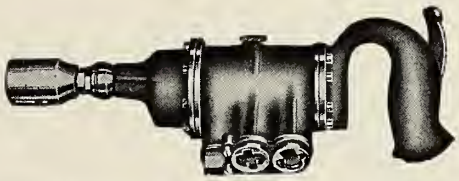

Fig. 2555—Little Giant Midget Air Drill for Tell-Tale Holes in Staybolts; Chicago Pneumatic Tool Company.

Fig. 2556—Air Hammer; Helwig Manufacturing Company.

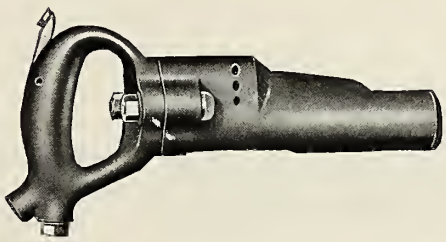

Fig. 2557—Little David Chipper; Ingersoll-Rand Company.

Fig. 2558—Little David Long Stroke Riveter; Ingersoll-Rand Company.

Fig. 2559—Long Stroke Hammer; Independent Pneumatic Tool Company.

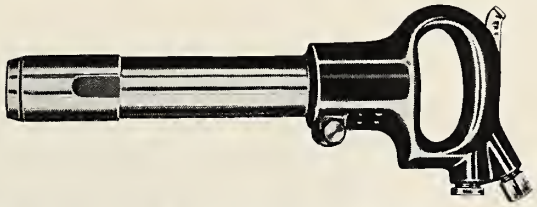

Fig. 2560—New Keller Riveter; Keller Pneumatic Tool Company.

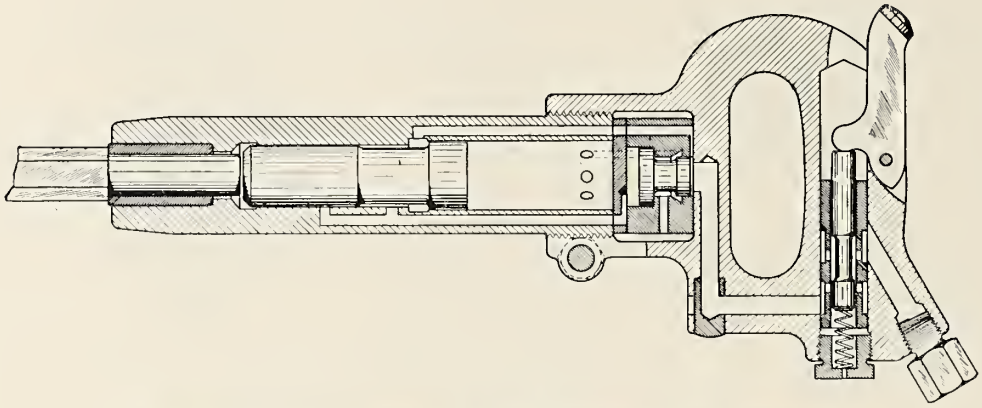

Fig. 2561—Keller Chipper; Keller Pneumatic Tool Company.

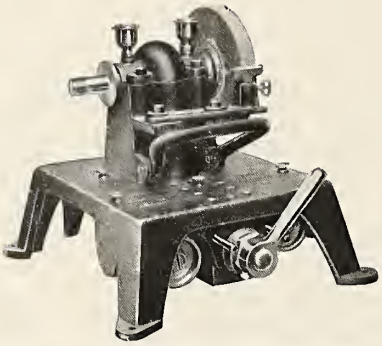

Fig. 2562—Pneumatic Grinder; Helwig Manufacturing Company.

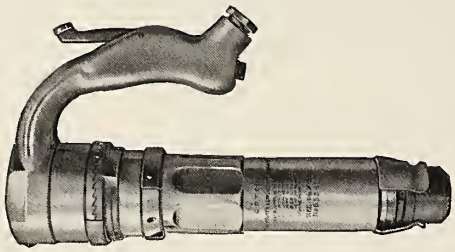

Fig. 2563—Boyer Riveter; Chicago Pneumatic Tool Company.

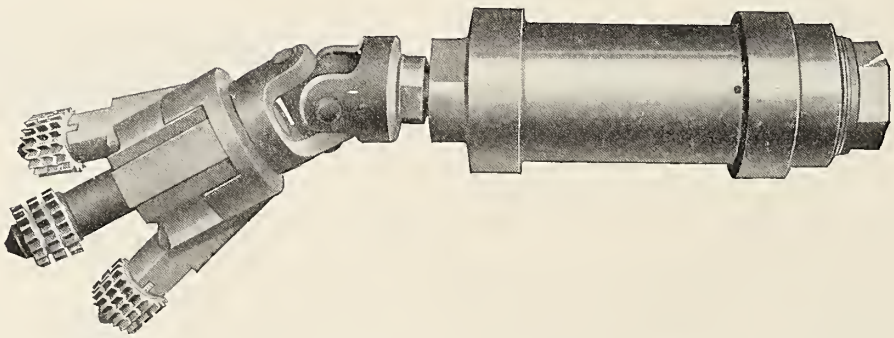

Fig. 2564—Cyclone Pneumatic Arch Tube Cleaner with Cutting Head; Liberty Manufacturing Company.

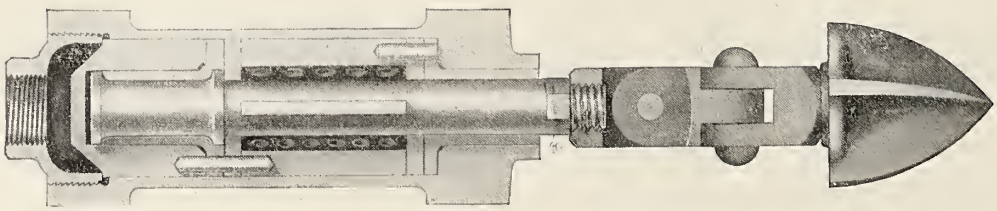

Fig. 2565—Cyclone Arch Tube Cleaner with Drill for Heavy Scale; Liberty Manufacturing Company

Catalogue Section

The Catalogue Section, which follows, is shown for the first time in this edition of the Locomotive Dictionary. A number of requests have been made by users of this book for more detailed information about the devices shown in the illustrated section. By confining that section to illustrations, captions, and dimensions, it has already grown to a large size, so that it is impractical to add thereto.

In the Catalogue Section, however, pages 909 to 962, an opportunity has been given manufacturers to supply information that will be helpful to those interested in locomotive building and maintenance. A serious attempt has been made to furnish data that is informative and practical.

The Buyers' Classified Directory, pages 964 to 970, has also an added feature. Under the name of any given product is not only the manufacturer's name, but reference to the page or pages used by that concern and, also, the various figure numbers referring to cuts in the Illustrated Section. Thus a complete reference is quickly obtainable.

The Trade Name Index, page 971, makes it easy to find a product where only the trade name is known.

Following the indexes is the usual Advertising Section.

The Alphabetical Index, on page 963, contains a complete list of the names of all manufacturers represented in either the Catalogue or Advertising Sections.

Economy Tender Truck

Features Sought in Its Design

The aim in the design of the Economy tender truck has been to secure an easy riding truck embodying the utmost flexibility in conjunction with the ability to remain square, thus insuring the best possible tracking qualities. Either a lateral motion or a rigid bolster arrangement may be used, the two arrangements being interchangeable.

Description

The truck body is made up of cast steel side frames of the pedestal type secured to a wide pressed steel spring plank which provides ample riveting surface to insure that the frames will remain square. The side frames are designed to provide ample lateral as well as vertical strength.

The swing bolster arrangement may be seen in the drawing. It consists of an auxiliary bolster located within the main bolster and resting upon three-point compression rockers. Any desired relation between lateral resistance and displacement may be secured by properly shaping the contour of the rocker and bolster bearing surfaces. If the lateral motion arrangement is not desired a plain bolster may be substituted for the swing motion bolster without otherwise altering the truck.

Easy riding qualities have been obtained by the use of the pedestal type of frame with coiled springs resting on an equalizer centrally located over each box, in combination with elliptic bolster springs.

Both the bolster guides and the pedestal jaws in the side frames are provided with renewable shoes, thus protecting the side frame from direct wear. The bolster is readily removed by dropping the bolster guide shoes.

Advantages

By the use of the lateral motion bolster arrangement we are enabled to furnish a swing motion truck with steel side frames and a flexible spring plank, a combination providing the greatest flexibility possible in this type of truck; and the truck will remain square.

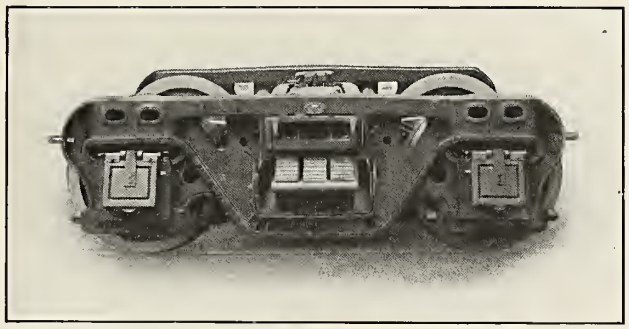

Economy Tender Truck.

A combination of coil and elliptic springs has been recognized as essential for an easy riding truck. By the use of three coil springs resting upon an equalizer over each box the load has been so sub-divided that a coil spring of great resiliency can be utilized. This spring arrangement will accommodate any axle load practicable. The use of a group of soil springs permits of the selection of a suitable standard spring for high capacity trucks.

These features have been obtained with a minimum number of parts all of simple and rugged design and readily assembled.

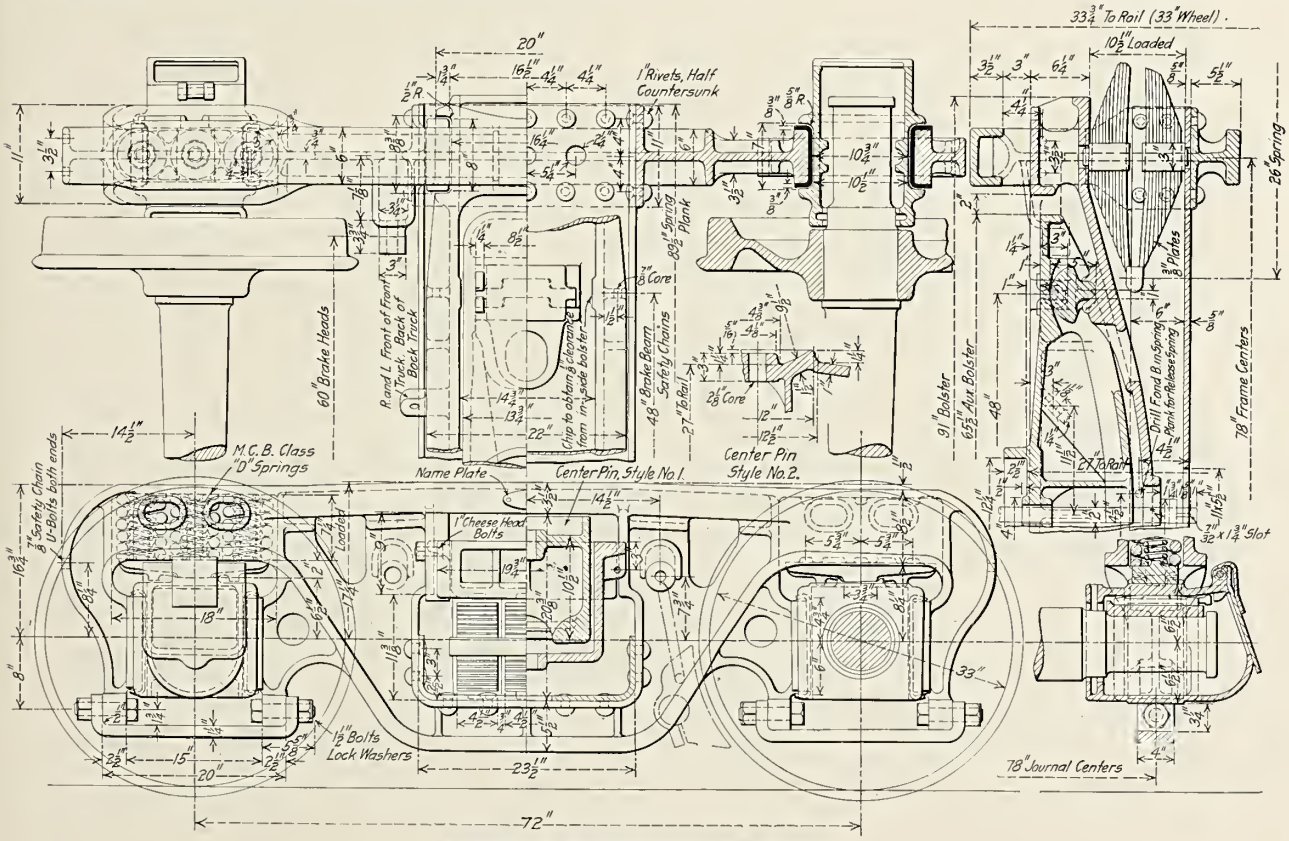

Details of Economy Tender Truck.

Economy Engine Trucks

Purpose

To properly perform its function of guiding the engine, an engine truck must have considerable lateral stability on tangent track combined with lateral flexibility when rounding sharp curves.. Under engines of medium weight the wheel bases of which rarely exceed 26 feet, a movement of 3½ inches represents the maximum lateral displacement of the truck bolster. With this comparatively small movement it is possible to use three-point hangers which are very short relative to the spread of the pins, without an excessive increase in the lateral resistance under conditions of maximum displacement.

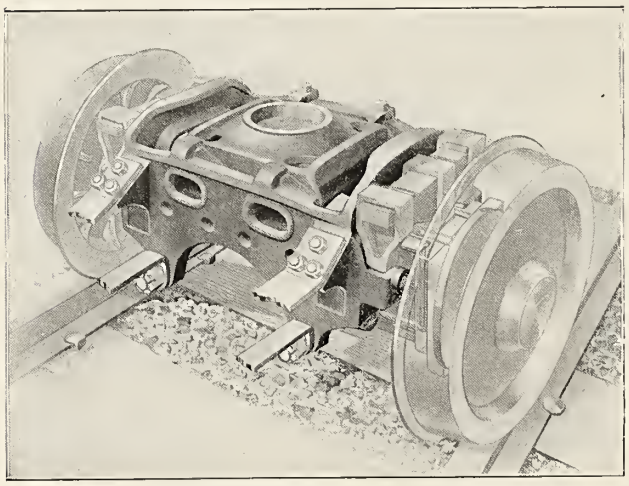

The Two-Wheel Truck.

In the case of heavy locomotives, however, the length of the wheel base requires a bolster displacement as great as 4½ inches, and it is necessary to use hangers of excessive length in proportion to the spread of the pins to insure safety. The initial resistance of the bolster is thereby decreased and the lateral stability and guiding qualities of the truck on tangent track are seriously impaired.

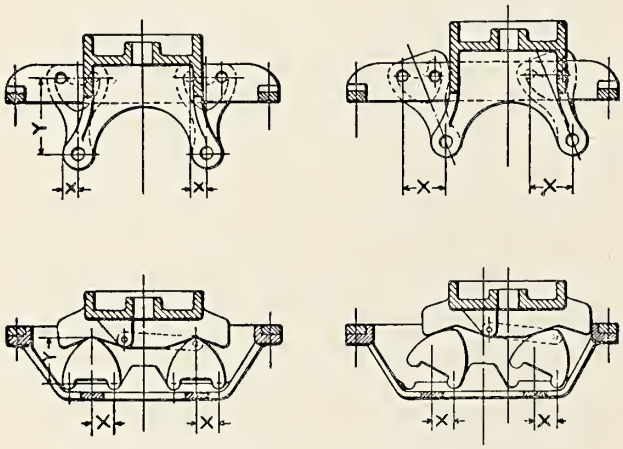

Three Point Hangers—Increasing Resistance.
Compression Rockers—Constant Resistance.

Economy engine trucks are designed to give high initial resistance with constant resistance to bolster displacement. While especially designed to meet the conditions presented by large engines these trucks are equally adapted to engines of medium or light weight.

The Constant Resistance Centering Arrangement

Both the two-wheel and the four-wheel trucks employ a constant resistance centering arrangement, the construction of which is clearly shown in the drawings. In this arrangement the bolster bears directly upon two heart-shaped rockers in compression, which are substituted for the usual form of three-point links. The relation of the surfaces in contact is such that resistance to lateral displacement remains constant throughout the movement of the bolster. A link connection between the rockers and the bolster insures the maintenance of the proper relative position.

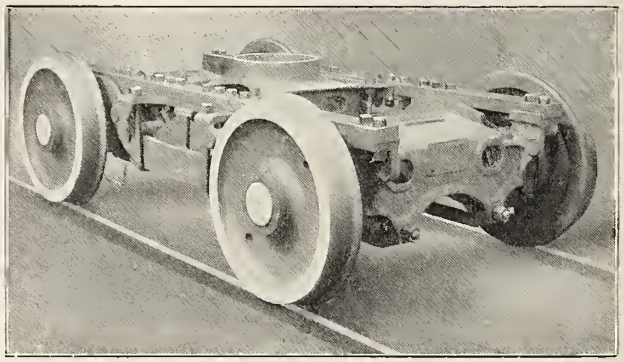

The Four-Wheel Truck.

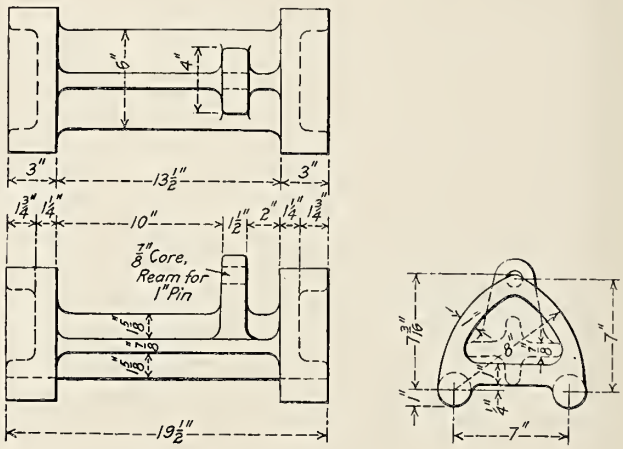

The Rocker.

A comparison of the three-point hanger suspension and the constant resistance arrangement shows that with the latter, upon the displacement of the center pin, the contact point moves on the curved surface of the rockers and the inclined plane of the bolster thus maintaining a practically constant ratio between *X* and *Y*, and therefore a constant lateral resistance. With the three-point hangers this ratio increases very rapidly.

Economy Engine Trucks *(Continued)*

Two-Wheel Truck

The frame and pedestals of the two-wheel truck are cast in one piece and are so arranged that semi-elliptic springs of good length can be used while affording ample clearance under the locomotive frame. The springs are supported by hangers directly from the main frame. The pedestal tie bars are so located that they come inside the journal boxes; this provides for the use of journal box cellars of ample depth and facilitates the removal and replacement of the cellars for packing.

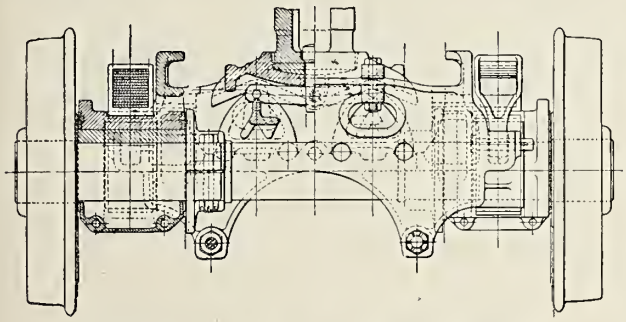

Construction of the Two-Wheel Truck.

Four-Wheel Truck

The frame of the four-wheel truck is of substantial design and eliminates the separate pedestal jaws usually used. The four pedestals at each end of the truck are combined into a single steel transom which is securely attached to the frame rails at either end. The pedestal ties are placed inside of the journal boxes, thus providing for cellars of ample depth and facilitating their removal and replacement for packing.

The pedestal jaws of both trucks are provided with removable wearing shoes.

Advantages

The constant resistance arrangement employed in these trucks provides a maximum guiding effort on tangent tracks and on main line curves resulting in greatly diminishing the wear on driving-wheel flanges.

It provides a diminished resistance at the point of greatest displacement resulting in greater safety in negotiating sharp curves and turnouts on the light tracks usually found at engine terminals.

It provides ample range of movement to meet the most severe conditions while retaining absolute stability of the bolster. With this bolster arrangement it is impossible for the inner wheel to leave the rail, as often happens with ordinary three-point hangers.

The truck frames have been carefully designed to meet the conditions imposed by high initial lateral resistance. The centering arrangement and frame construction eliminates 30 per cent. of the parts ordinarily required in the built-up type of truck.

The design of the two-wheel truck enables a semi-elliptic spring of ample length to be used.

Journal box cellars of ample depth may be used. They may be removed and replaced for packing without disturbing the box in the pedestal jaws.

The pedestals are protected from wear by pressed steel shoes. These can be quickly replaced when worn without dropping the wheels.

The use of cast-iron axle collars secured to the axle inside the journal boxes reduces hub wear and materially decreases the cost of maintenance.

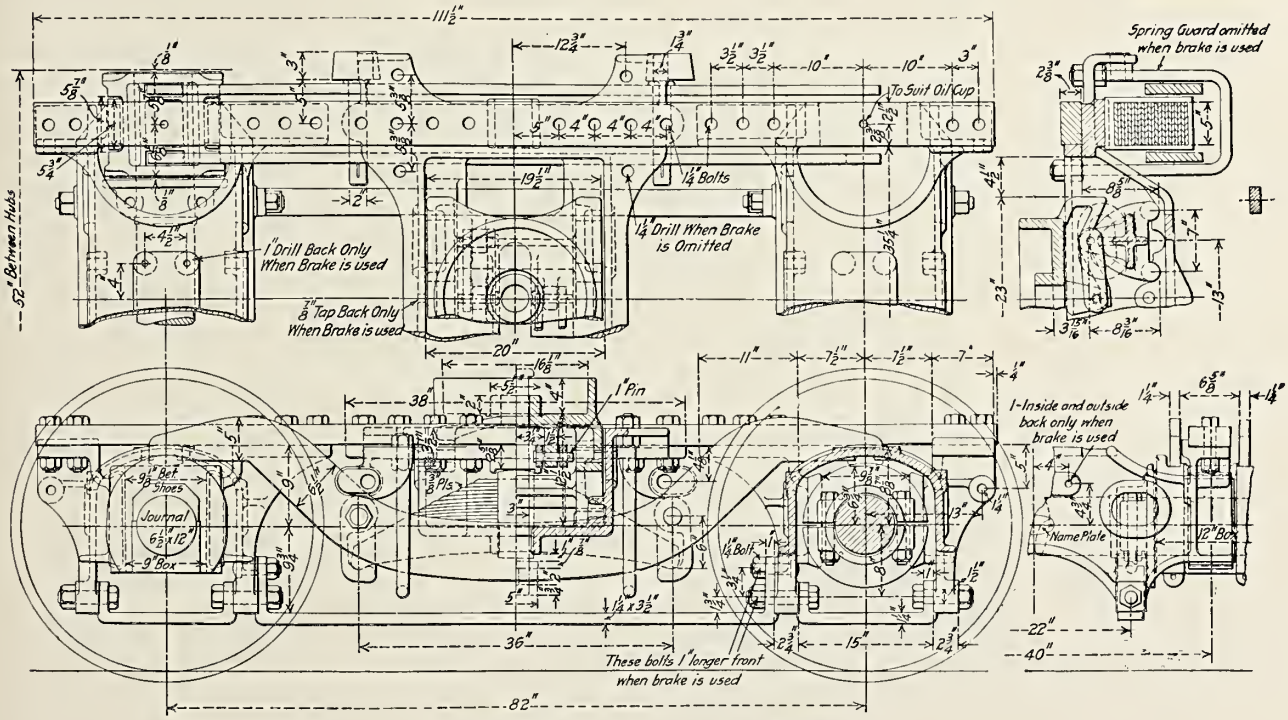

Details of the Four-Wheel Truck.

Service results with these trucks show a marked reduction in the flange wear on leading drivers, a steadying action while running on straight track and an absence of jerky motion on curves. This means a better riding engine under all track conditions.

Power Reverse Gears

Their Field

The Mallet engine from the start has required a power reverse gear because of its heavy and complex valve motion. Passenger, freight and switch engines have now become so heavy as to require a power mechanism to handle the valve gear to the best advantage and to insure that the railroads receive the best use of these engines.

The Ragonnet Gear

The accompanying illustration represents the Ragonnet gear. This device has been extensively used several years and is now in service on hundreds of locomotives. It has passed through the experimental stage and is presented as a thoroughly practical solution of the power reverse gear problem.

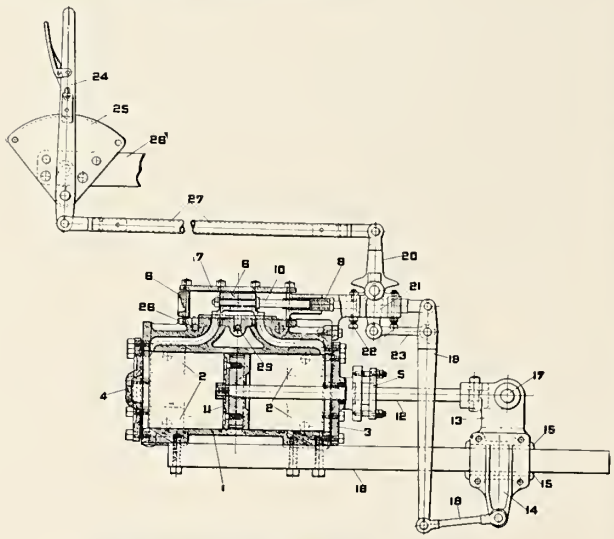

Ragonnet Power Reverse Gear.

1—Cylinder
2—Cylinder Support
3—Cylinder Head, front
4—Cylinder Head, back
5—Cylinder Gland
6—Valve Chest
7—Valve Chest Cap
8—Valve Chest Gland
9—Valve
10—Valve Stem
11—Piston
12—Piston Rod
13—Crosshead
14—Crosshead Plate
15—Crosshead Gibs
16—Crosshead Guide
17—Reach Rod Conn. Pin
18—Floating Lever
19—Floating Lever Link
20—Rocker
21—Valve Stem Guide
22—Safety Stop Set Screw
23—Connecting Link
24—Reverse Lever
25—Rev. Lever Supp. and Quad.
26—Rev. Lever Bracket
27—Rev. Lever Con. Rod
28—Air Inlet
29—Exhaust Port

The gear is preferably operated by air although an auxiliary steam connection is provided. Distribution is controlled by an ordinary D slide valve arranged for outside admission, the exhaust or inside lap being materially greater than the admission or outside lap which is very small. The cross-head gibs are held in place by a cast steel plate having an arm projecting downward. This cross-head arm is connected by a suitable link with the lower end of a floating lever. The upper end of this floating lever is pivotly connected to, and supported by the valve stem, which in turn is carried by a cylindrical guide. Through the agency of a rocker, the upper end of which is connected by a light rod with a small reverse lever, and the lower end through a link with the floating lever a short distance below the valve stem, the movement of the valve is controlled from the cab. The rocker is provided with tappets which strike the end of projecting set screws when the limit of travel of the valve is reached with the cab lever. These screws merely limit the throw of the reverse arm in either direction and require no adjustment after once being set. The reverse lever is locked in any desired position by an ordinary toothed quadrant.

It will be seen that the floating lever causes the valve to be lapped when the piston has reached a position in the cylinder corresponding to the position in which the reverse lever is placed. Assuming the reverse lever in mid position and the valve normally covering both parts, when the lever is moved into full forward motion (to the right, as shown on the drawing), the valve will be moved to the right by the floating lever swinging about its lower end as a fulcrum and air will be admitted to the left end of the cylinder. As soon as the lever is latched the valve will be moved to the left by the floating lever, swinging about its pivot on the connecting link, and will be lapped when the piston has reached its maximum travel to the right. Since the exhaust or inside lap of the valve is materially greater than the outside lap, air pressure is held on both sides of the piston at the same time. The mechanism is thus prevented from creeping or vibrating by an elastic cushion. In no case does the valve open to the exhaust when holding the gear in any desired cut-off position.

Performance

The entire mechanism is so simple in construction and has proved so reliable in service that as a rule no auxiliary hand gear of any description is applied. Owing to the proportions of the valve lap the gear is very economical of air. When the piston and piston-rod packing is properly maintained the loss of air in holding the gear in a fixed position is practically nil.

The holding of the valve gear through the medium of an air cushion instead of by a rigid latch and quadrant materially lessens the wear and tear on the valve gear and its connections.

The Casey-Cavin Gear

This is a comparatively new power reverse gear which is air operated and controlled by a small hand lever in the cab. It differs from the Ragonnet gear in the arrangement and location of the valve which controls the admission and exhaust of air from the cylinder.

The device consists essentially of a cylinder containing a piston and rod suitably connected to the reverse shaft by means of a reach rod, and a valve containing two independently movable discs, one directly operated by the hand lever and the other by a connection from the piston in the cylinder, or the crosshead to which the reach rod is connected. These valve discs are so ported and arranged that by a movement of the hand-controlled disc pressure is admitted to one end of the cylinder and exhausted from the other end, thereby producing a movement of the piston which brings the ports in the other disc to the same relation that they originally bore to the hand-controlled disc. In this position the pressure is held on both sides of the piston thereby locking it at any point.

Power Reverse Gears *(Continued)*

Its Advantages

This device fills a long-felt want for a reliable gear which is at the same time so simple that it adds little or nothing to the cost of maintenance. The cylinder is compact and can be attached to the firebox, the boiler or running board in a substantial manner without interfering with other parts of the locomotive.

The space occupied in the cab is very small, the travel of the handle being about 16 inches. The maximum pull necesary is from 12 lbs. to 15 lbs.

The total weight of the gear for a simple locomotive is about 375 lbs.; for a Mallet locomotive about 500 lbs.

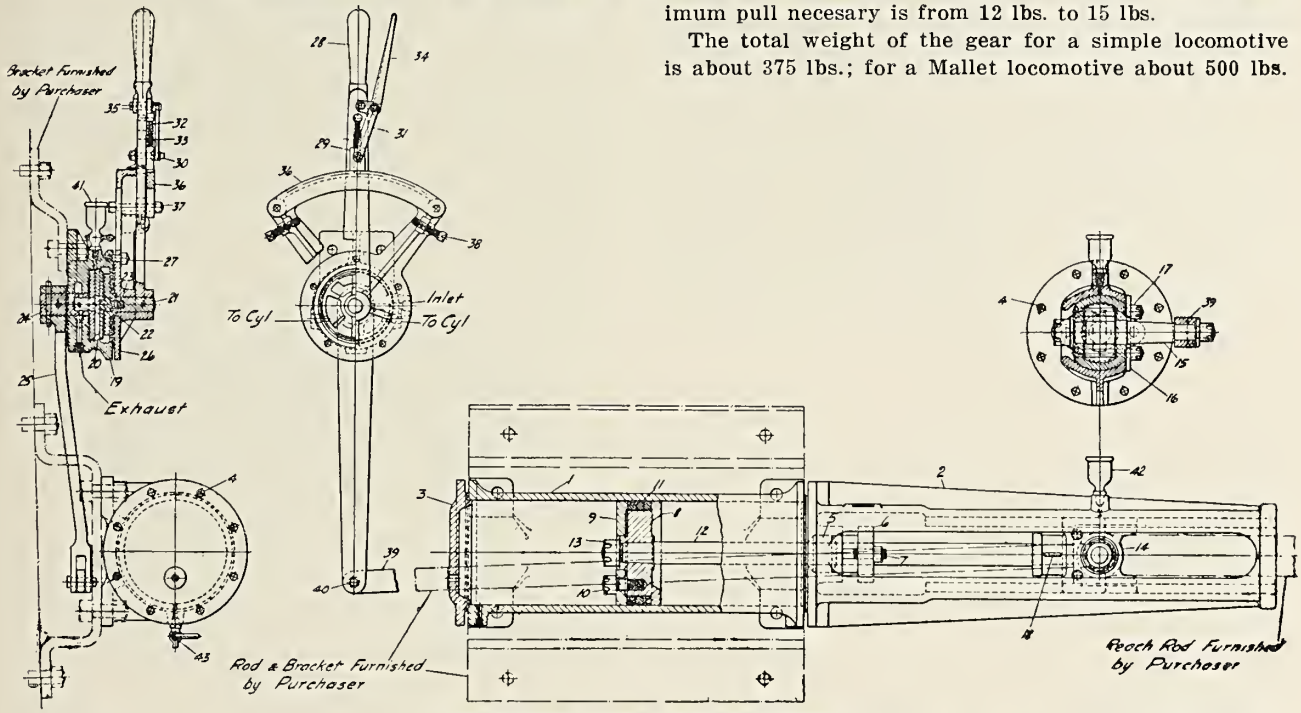

Casey-Cavin Power Reverse Gear.

1 Cylinder
2 Cylinder Head, front (crosshead guide)
3 Cylinder Head, back
4 Cylinder Head, Studs and Nuts
5 Piston Rod Packing
6 Piston Rod Gland
7 Piston Rod Gland, Studs and Nuts
8 Piston Head
9 Piston Follower
10 Piston Follower, Studs and Nuts
11 Piston Packing
12 Piston Rod
13 Piston Rod Nut
14 Crosshead
15 Crosshead Pin with Nuts and Washers
16 Crosshead Guide Plate
17 Crosshead Guide Plate Bolts and Nuts
18 Crosshead Key
19 Valve Body
20 Valve Hand Disc
21 Valve Hand Disc Spindle
22 Valve Hand Disc Spindle Washer
23 Valve Hand Disc Spring
24 Valve Power Disc
25 Valve Power Lever
26 Valve Cover
27 Valve Cover Studs and Nuts
28 Hand Lever
29 Hand Lever Latch
30 Hand Lever Latch Bolt and Washer
31 Hand Lever Latch Link
32 Hand Lever Latch Spring
33 Hand Lever Latch Spring Rod
34 Hand Lever Handle
35 Hand Lever Handle Pins (2)
36 Hand Lever Quadrant
37 Hand Lever Quadrant Bolts and Nuts
38 Hand Lever Set Screws and Nuts
39 Power Lever Rod Ends
40 Power Lever Pin
41 Valve Body Oil Cup
42 Guide Oil Cup
43 Drain Cock Complete (2)

Radial Buffer

Where Used

The radial buffer is designed to provide for a free movement between engine and tender with the chafing castings in close contact. Two types are made. Type A-1 is provided with a wedge *E* for adjusting the slack between the engine and tender. In type C twin springs are substituted for the wedge. The chafing faces are of the same design in both types.

Advantages

Engines with trailing trucks as well as switch engines have an excessive overhang at the rear end. In curving this results in great lateral displacement of the engine chafing iron relative to the tender buffer and with the ordinary chafing arrangement, either solidly or flexibly connected, great strains are induced and rapid wear obtains. To satisfactorily provide for these conditions there must be flexibility in all directions with no slack between the buffing faces. The radial buffer meets these conditions by providing an absolutely universal movement of buffing faces. It maintains the surfaces in contact under all conditions and provides a simple means of taking up slack.

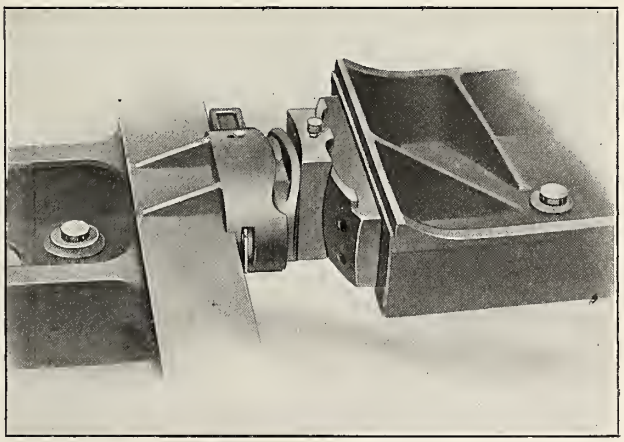

Radial Buffer.

Radial Buffer *(Continued)*

Since universal movement is provided the springs are never subjected to undue strains and buffer is free from spring breakage.

The contact between engines and tenders is at all

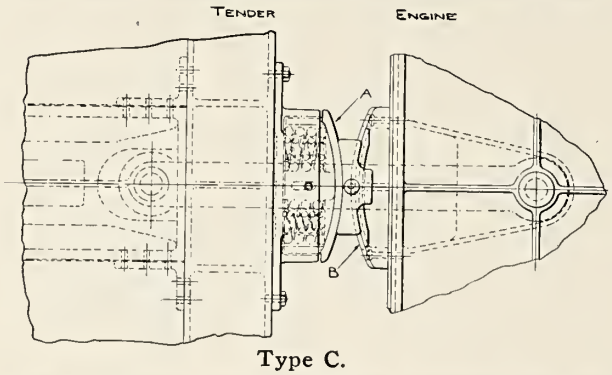

Type C.

times distributed over a large area, thereby relieving the surfaces of undue wear from concentrated chafing action, shock and impact.

The radial buffer also prevents distortion of the drawbar pin holes and bending of pins, as it is impossible to create a toggle action such as frequently occurs with other types of buffers.

How It Operates

In both types vertical movements are taken care of between surfaces *A*, horizontal movements between surfaces *A* and *B* and rolling movements between surfaces *B*, the latter being spherical in shape. Since all movements, whether horizontal, vertical or rolling, are provided for by the radial and spherical surfaces of the chafing plates and the adjacent surfaces of the floating block, the function of the springs in type *C* is only that of keeping the surfaces in contact under a predetermined pressure.

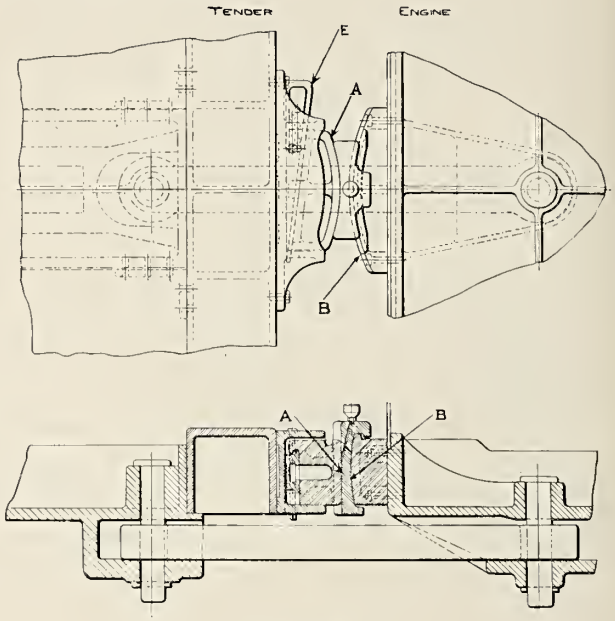

Type A-1.

All parts are made of cast steel and the wearing surfaces are specially treated.

Universal Valve Chest

Where Used

The slide valve is generally considered unsatisfactory for use with superheated steam. The application of superheaters to many locomotives having slide valve cylinders is therefore considered impracticable, largely because of the cost of redesigning and replacing the cylinders, front frame sections and other minor parts, which would be necessary in order to provide piston valves. The Universal valve chest offers a practicable piston valve arrangement for application to existing slide valve cylinders.

Advantages

The Universal valve chest makes available the advantages of the superheater for many engines built within comparatively recent years which are equipped with slide valve cylinders. A marked saving in the cost of conducting transportation may thereby be brought about by a comparatively small expenditure; in many cases the purchase of new power may even be postponed.

Since the application of this device does not require any change in the cylinders, valve gear or frames, the actual saving in the cost of converting engines to superheat, over the application of new piston valve cylinders, may easily reach $1,000, besides enabling the work to be done in the local shops instead of shipping the engines to some distant point where the facilities are better.

Construction

The Universal valve chest consists of two chambers of separate construction. The steam chest is designed to replace the existing slide valve steam chest and is secured to the cylinders by studs, without alteration in their original spacing. An opening in the front wall permits the removal of the valve without disturbing the steam chest. This is closed with a head secured with studs. A joint wire is used between the steam chest and its seat.

Within the steam chest is placed the valve chamber, to which a continuous bushing is applied in the ordinary manner. It rests upon the slide valve seat to which it is secured by four studs and six holding-down screws passed through bosses on the top of the steam chest. The steam chest pressure also acts downward on 70 per cent. of its outside area.

Separate steam and exhaust port joint wires are used. They are so arranged that the placing of double wires on the bridges is unnecessary.

A short, light, built-up piston valve is used, the center of the valve stem being offset to conform to the location of the original valve yoke stem.

The spool of the valve is oval in section to facilitate the passage of exhaust steam downward to the exhaust port.

The valve is of such diameter that its effective circumference is somewhat greater than the port length of the flat valve seat. By actual test this has been

Universal Valve Chest *(Continued)*

proved to be sufficient and gives valve sizes and weights as follows:

Port Length.	Valve Diameter.	Weight of Valve.
Up to and including 19 inches	8 in.	58 lbs.
20 in. to 22 in., inclusive....	9 in.	65 lbs.
23 in. and over.....	10 in.	78 lbs.

The steam chest may be made for direct connection to outside steam pipes. In this case pipe cover plates are bolted over the steam pipe bosses in the smokebox and the steam passages in the saddle are filled with a rich concrete mixture. A short obtuse angle elbow is used immediately above the steam chest to facilitate its removal without disturbing the pipe in the smokebox.

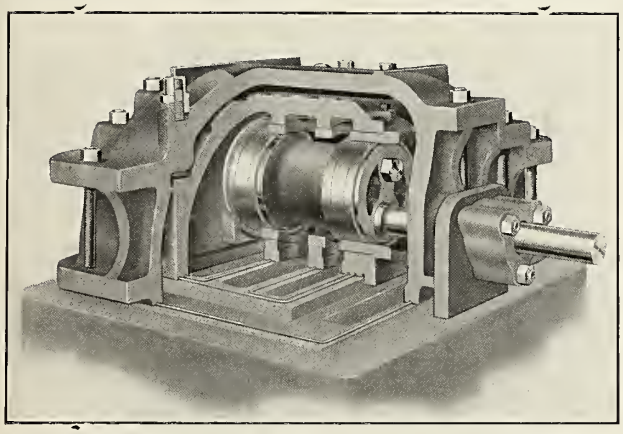

Construction of the Universal Valve Chest.

Service Results

On the Kansas City Southern a saving in fuel amounting to about $10 per round trip was effected by the application of a Schmidt superheater and a Security brick arch to a Consolidation type locomotive originally equipped with slide valve cylinders, as compared with an engine of the same class on which the firebox was altered to increase the grate area and effect better combustion.

On a tonnage test, comparing the same two locomotives, the superheater locomotive showed an increase of 15.4 per cent. in ton-miles with a decrease of 16 per cent. in fuel consumption per 100 ton-miles at 11.6 per cent. greater speed.

The use of the Universal Valve Chest even on saturated steam engines is attended by a considerable saving in fuel, and increased hauling capacity, as has been proven by actual tests, over the slide valve. This is brought about, first by the diminution of the frictional losses incident to moving the heavy poorly balanced slide valve; second, better lubrication of valve, causing engine to stay "square" at all times; third, the easy handling of the engine enables the engineer to adjust the cut-off under any condition, and thus effect a decided economy in the use of steam.

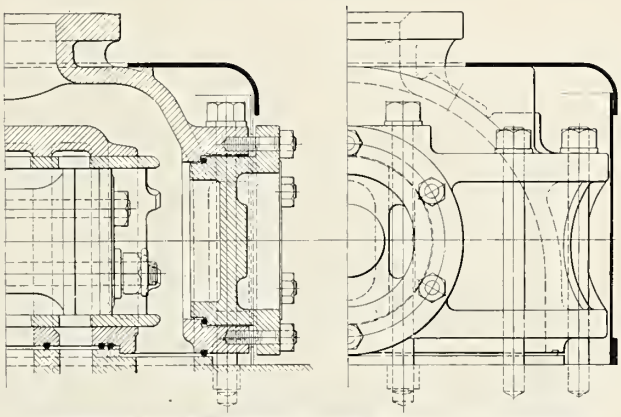

Provision for Removing Valve Without Disturbing Steam Chest.

Economy Exhaust Nozzle

Description

The Economy exhaust nozzle is designed to replace the usual type of nozzle with a circular opening. It has a rectangular opening and is placed on the exhaust pipe with the long dimension coinciding with the longitudinal center line of the boiler.

By using a rectangular opening the gas-entraining surface of the jet is increased 20 per cent. over that produced by a circular nozzle having an equivalent area.

Advantages

The rectangular nozzle produces that form of jet best adapted to fill the stack under all conditions. It thereby insures against one frequently occurring cause of inefficient draft. Under ordinary operating conditions the horsepower required to produce draft often forms a considerable portion of the total output of the engine and any means whereby the necessary draft may be produced with a decreased back pressure may be expected to result in a saving in fuel. By increasing the entrainment surface of the jet without resort to bridges or other impediments to the flow of steam the rectangular nozzle will produce like draft conditions with greater nozzle area and consequently less back pressure.

With the same nozzle area it will increase the steaming capacity of the boiler 10 per cent. over best results obtainable with circular nozzle of equal area.

The net result of these features is a better steaming engine, increased hauling capacity, economy in the use of fuel. These advantages have all been proven by demonstration.

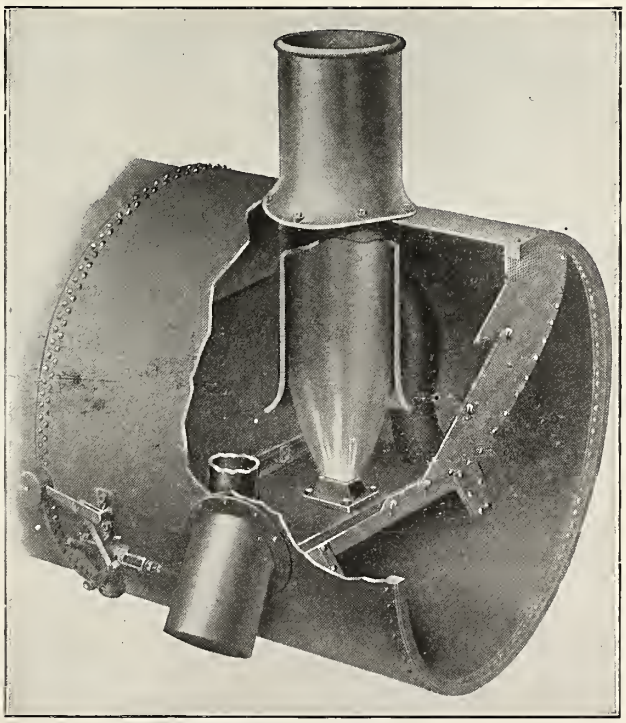

Economy Exhaust Nozzle.

Freight Locomotives

CONSOLIDATION TYPE—WHEELING & LAKE ERIE RAILROAD.

Total Weight of Engine, 266,500 pounds; Weight on Drivers, 236,000 pounds; Diameter of Drivers, 57 inches; Boiler Pressure, 185 pounds; Cylinders, 26 x 30 inches; Maximum Tractive Power, 55,900 pounds.

These locomotives are the leaders of their class because they are the heaviest Consolidations built. They demonstrate the possibility of obtaining a perfectly satisfactory boiler on this type of engine where freight service does not demand a speed greater than can be obtained economically by 57-inch wheels.

Eastbound on the Toledo division they are handling 820 tons, or 35.4 per cent greater train loads than older locomotives of the same type.

Westbound on the same division they are handling 930 tons, or 35.1 per cent greater train loads.

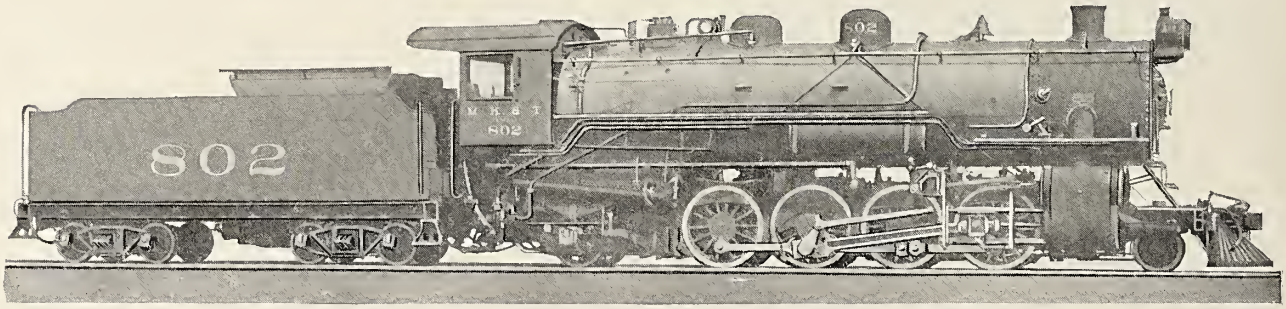

MIKADO TYPE—MISSOURI, KANSAS & TEXAS RAILWAY.

Total Weight of Engine, 314,000 pounds; Weight on Drivers, 233,500 pounds; Diameter of Drivers, 61 inches; Boiler Pressure, 185 pounds; Cylinders, 28 x 30 inches; Maximum Tractive Power, 60,600 pounds.

These locomotives are a development of Mikado engines introduced on the Missouri, Kansas & Texas in 1913.

The new Mikados have a total weight, engine and tender, of 479,100 pounds, and the older engines have a total weight, engine and tender, of 457,100 pounds. The new Mikados have a tractive power of 60,600 pounds and the older Mikados a tractive power of 54,500 pounds.

With an increase in weight of only 4.8 per cent an increase in tractive power of 11.2 per cent is obtained.

In the big locomotives of to-day an increase in power greater in proportion than the increase in weight can be secured by the application of the knowledge and experience gained through years of designing.

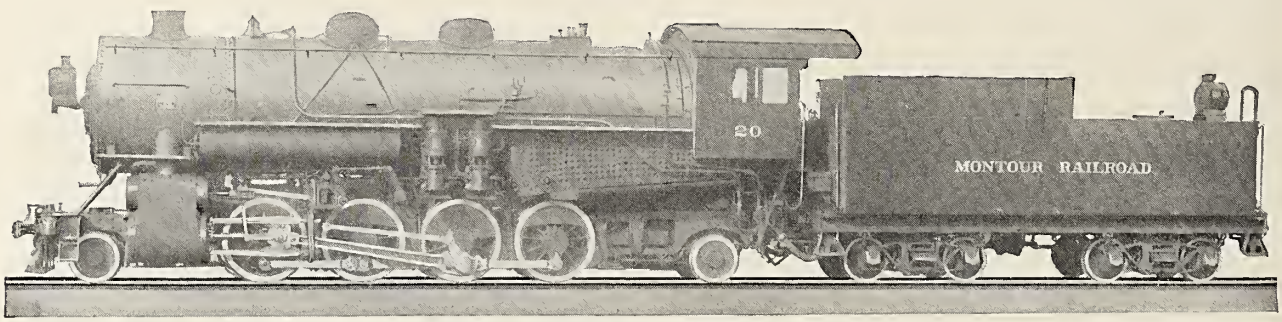

MIKADO TYPE—MONTOUR RAILROAD.

Total Weight of Engine, 296,500 pounds; Weight on Drivers, 249,500 pounds; Diameter of Drivers, 57 inches; Boiler Pressure, 185 pounds; Cylinders, 27 x 32 inches; Maximum Tractive Power, 64,500 pounds.

These locomotives were designed for a special condition requiring a large amount of backing. On some occasions they are required to back up a distance of 32 miles. To meet these conditions an inside bearing constant resistance type truck of the same general design is used front and rear.

These locomotives are exceptional in the comparison between total weight and tractive power. They weigh only 296,500 pounds and have a tractive power of 64,500 pounds. They are also exceptional in the proportion of total weight on drivers. The weight on drivers is 249,000 pounds, or 84.2 per cent of the total weight.

2-10-2 Type Locomotives

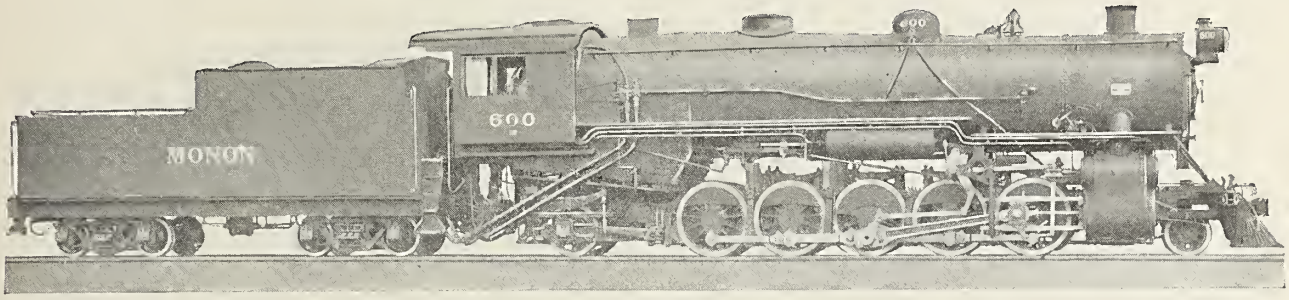

CHICAGO, INDIANAPOLIS & LOUISVILLE RAILROAD.

Total Weight of Engine, 341,000 pounds; Weight on Drivers, 275,500 pounds; Diameter of Drivers, 57 inches; Boiler Pressure, 190 pounds; Cylinders, 28 x 30 inches; Maximum Tractive Power, 66,700 pounds.

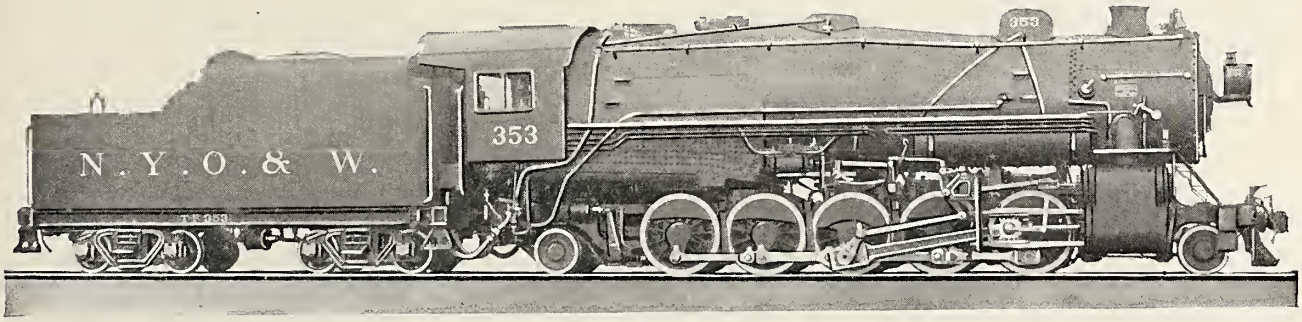

NEW YORK, ONTARIO & WESTERN RAILWAY.

Total Weight of Engine, 352,500 pounds; Weight on Drivers, 293,000 pounds; Diameter of Drivers, 57 inches; Tube Length, 17 feet; Boiler Pressure, 190 pounds; Cylinders, 28 x 32 inches; Maximum Tractive Power, 71,200 pounds.

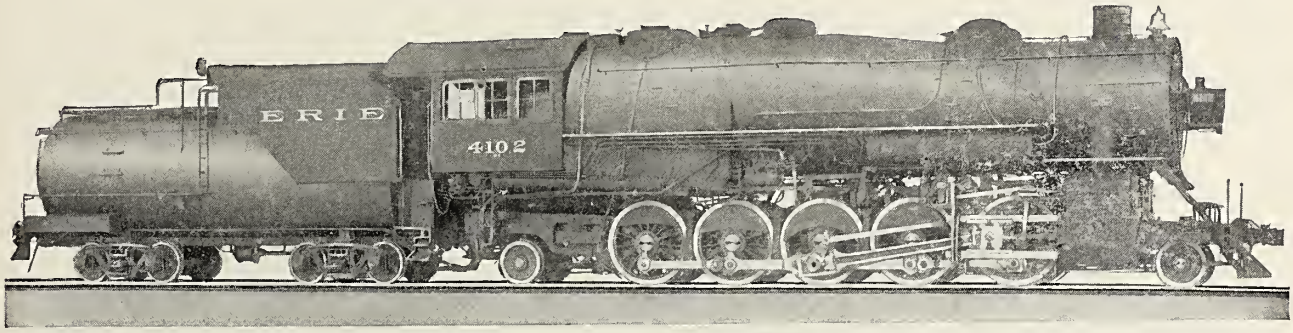

ERIE RAILROAD.

Total Weight of Engine, 401,000 pounds; Weight on Drivers, 335,500 pounds; Diameter of Drivers, 63 inches; Tube Length, 17 feet; Boiler Pressure, 200 pounds; Cylinders, 31 x 32 inches; Maximum Tractive Power, 83,000 pounds.

The large tractive power, combined with sufficient boiler capacity and an ample factor of adhesion, which can be so easily obtained in the 2-10-2 type, is attracting the attention of many railroad officials.

The last two engines have several new and noteworthy features. The front drivers are fitted with a floating axle and the side rods connecting these drivers are fitted with ball joint connections. This allows a lateral motion of one inch each way, and enables the engine to work on sharp curves without excessive flange wear.

A high percentage of the total weight is on drivers. The short tubes reduce back pressure and consequently increase the power of the engine.

Mallet Locomotives

2-6-6-2 TYPE—NORFOLK & WESTERN RAILWAY.

Total Weight of Engine, 405,000 pounds; Weight on Drivers, 337,300 pounds; Diameter of Drivers, 56 inches; Boiler Pressure, 200 pounds; Cylinders, 22 and 35 x 32 inches; Maximum Tractive Power, 72,800 pounds.

Five years' service of road Mallets have proven their economic worth on the Norfolk & Western. One hundred and fifty of these road Mallets were placed in service on this road between 1910 and 1915.

They were designed with careful consideration of all the conditions of service. They are the product of the American Locomotive Company's wide experience in the design and construction of big locomotives, supplemented by the complete knowledge of the special operating factors by the officials of the railway company's Motive Power Department.

Service records of these road Mallets show that on both the Norfolk and Radford divisions train tonnage has been increased 43 per cent.

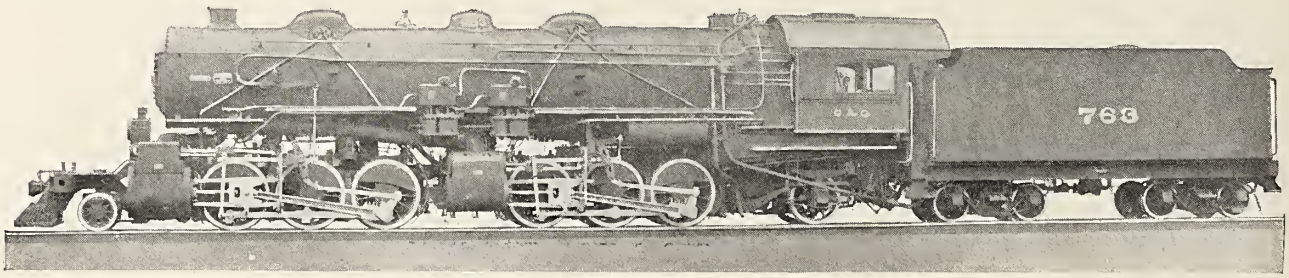

2-6-6-2 TYPE—CHESAPEAKE & OHIO RAILWAY.

Total Weight of Engine, 400,000 pounds; Weight on Drivers, 337,500 pounds; Diameter of Drivers, 56 inches; Boiler Pressure, 200 pounds; Cylinders, 22 and 35 x 32 inches; Maximum Tractive Power, 72,800 pounds.

In 1912, 25 road Mallets replaced 44 Consolidations on the Chesapeake & Ohio. At present 100 of these are in service on this road.

The design was developed from data secured from a trial engine. The trial engine was the result of a careful analysis of the physical and operating conditions of the division made jointly by the officials of the road and the builders.

Reduced cost of operation by running fewer and heavier trains by more powerful and more economical locomotives was the object.

These locomotives are saving 37.5 per cent in the cost of handling freight traffic. They haul 70 per cent greater average train loads at the same average speeds.

Consider the capacity of the track with Mallets hauling the same number of trains as were required with smaller locomotives.

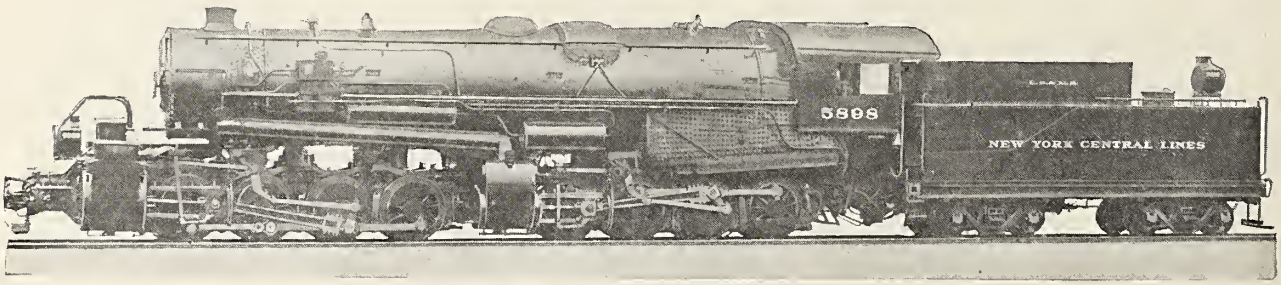

0-8-8-0 TYPE—NEW YORK CENTRAL RAILROAD.

Total Weight of Engine, 466,000 pounds; Diameter of Drivers, 51 inches; Boiler Pressure, 220 pounds; Cylinders, 26 and 40 x 28 inches; Maximum Tractive Power, 100,500 pounds.

Increased size of road locomotives increases the importance of providing means for economically handling the heavy freight trains brought into the yards.

This is particularly true in gravity or hump yards, where it is often necessary to divide trains for switching.

The problem has been solved in the Elkhart and Air Line Junction yards of the New York Central Railroad by the purchase of Mallet switching locomotives. These Mallets handle the heaviest trains with one unit where it was formerly necessary to divide the trains.

Passenger Locomotives

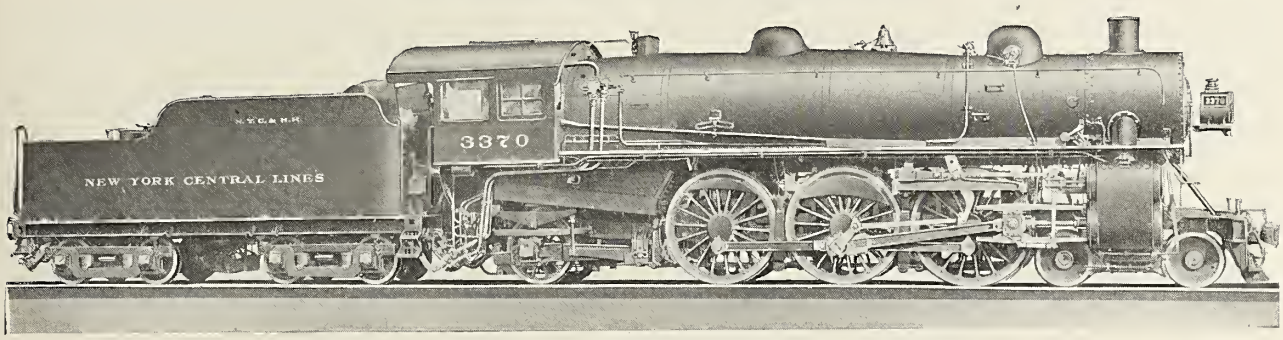

PACIFIC TYPE—NEW YORK CENTRAL RAILROAD.

Total Weight of Engine, 271,000 pounds; Weight on Drivers, 172,000 pounds; Diameter of Drivers, 79 inches; Boiler Pressure, 200 pounds; Cylinders, 23½ x 26 inches; Maximum Tractive Power, 30,900 pounds.

These locomotives handle all the fast passenger service on the New York Central Railroad.

Present day heavy passenger trains require more powerful locomotives to maintain fast schedules. Large starting efforts, high sustained tractive power and reserve capacity are necessary.

The modern Pacific type locomotive combines these features in a satisfactory manner and gives a margin of power for additional cars without any increase in fuel consumption as compared with locomotives of earlier design.

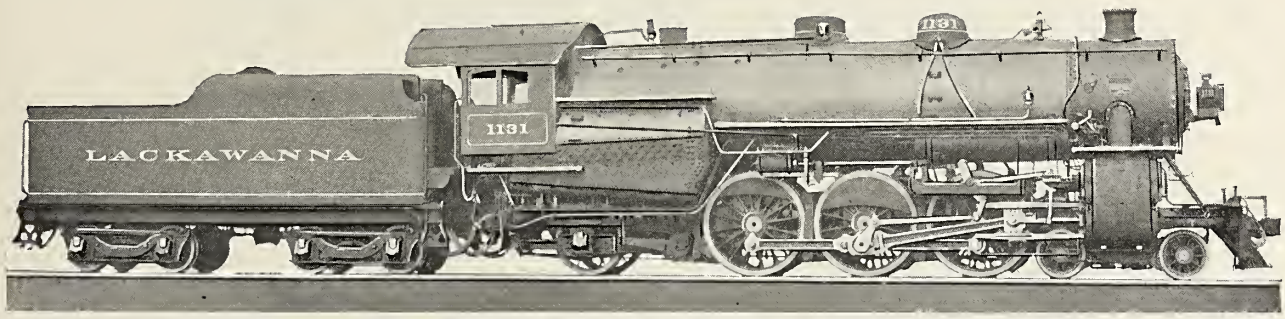

PACIFIC TYPE—DELAWARE, LACKAWANNA & WESTERN RAILROAD.

Total Weight of Engine, 305,500 pounds; Weight on Drivers, 197,300 pounds; Diameter of Drivers, 73 inches; Boiler Pressure, 200 pounds; Cylinders, 27 x 28 inches; Maximum Tractive Power, 47,500 pounds.

These powerful Pacific type locomotives were designed to eliminate expensive double heading. They handle 600 tons at a speed of 30 m.p.h. on a continuous 78-foot grade 16 miles long with curves of 5 and 6 degrees.

A high tractive power, sufficient boiler capacity, and an ample factor of adhesion make these not only the most powerful Pacifics ever built, but also a very well balanced design, proving that size, weight and power may be carried to a great development without sacrifice of any kind, but with distinct advantage in the powerful operating unit.

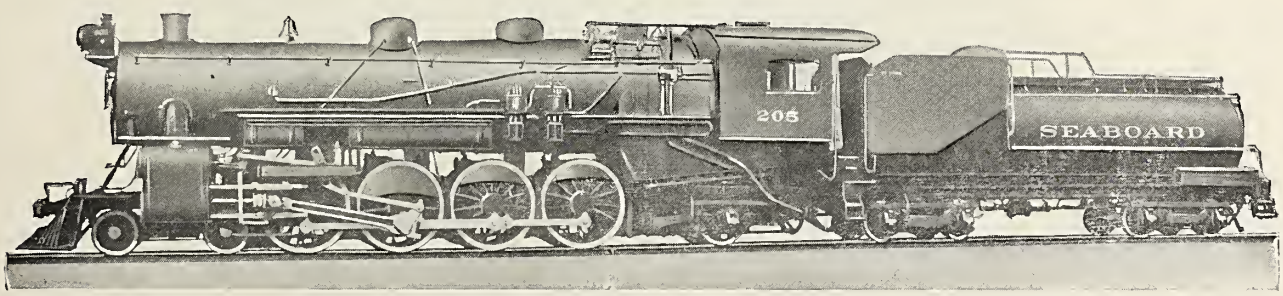

MOUNTAIN TYPE—SEABOARD AIR LINE RAILWAY.

Total Weight of Engine, 316,000 pounds; Weight of Drivers, 210,500 pounds; Diameter of Drivers, 69 inches; Boiler Pressure, 190 pounds; Cylinders, 27 x 28 inches; Maximum Tractive Power 47,800 pounds.

These locomotives maintain a speed of from 35 to 40 m.p.h. on 1.2 and 1.25 per cent grades with 11 cars. On some occasions this type handled 12 heavy steel cars on these grades maintaining a speed of 35 m.p.h.

To avoid double heading and maintain schedules over the most difficult portions of the road was the problem presented in this case. The Mountain type locomotives have more than fulfilled expectations.

With its four pairs of drivers the Mountain type combines high tractive power with the necessary factor of adhesion to enable it to start heavy passenger trains on steep grades.

Locomotives

Organization

The Baldwin Locomotive Works occupies about sixteen acres in the heart of Philadelphia and two hundred and twenty-five acres at Eddystone on the Delaware river, twelve miles below the city. The offices and principal machine shops are in Philadelphia.

The works were founded by Matthias W. Baldwin and date their origin from the inception of steam railroads in this country. The first locomotive was ordered by the Philadelphia, Germantown and Norristown R. R. This locomotive, "Old Ironsides," was finished and tried on the road in 1832. From that time to the present The Baldwin Locomotive Works have kept pace with the progress of American railroad practice and have themselves contributed largely to the development of the locomotive as it exists to-day.

The Baldwin Locomotive Works, with its modern equipment and large engineering staff, is in position to design and build locomotives of all types from the smallest to the largest. Its long experience in the construction of locomotives enables it to turn out the finest class of work promptly and economically.

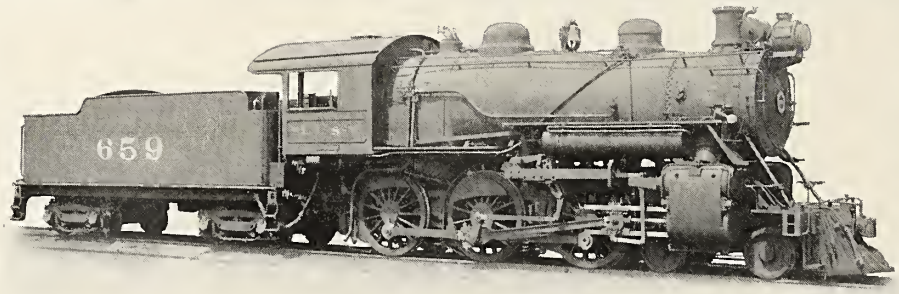

Ten-Wheeled Locomotive. Cylinders, 22" x 28". Weight, Total Engine, 209,200 lbs.

Another feature is the Department of Repairs, which is maintained for the purpose of aiding railways in the maintenance of their power. All locomotives have been built to gages and templates for many years, and as all drawings are preserved, accurate repair parts can be furnished promptly for any locomotive which was built by this company and is still in service.

An important branch of work which is handled by the Department of Repairs is the rebuilding and modernizing of locomotives. The rapid evolution of railway motive power during the past few years has resulted in the early retirement of many large engines from main line service. Frequently these locomotives are relegated to branch lines or local runs, where they are worked considerably below their full capacity. Power of this kind, if rebuilt and modernized, would again be available for main line service, and could be assigned work in proportion to its capacity, with a resulting economy in operation.

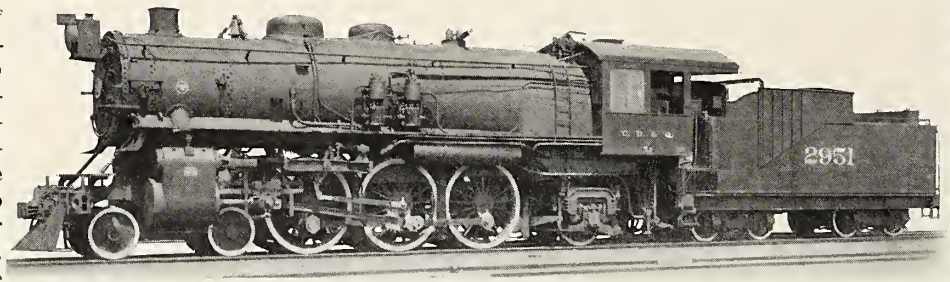

Pacific Type Locomotive. Cylinders, 27" x 28". Weight, Total Engine, 266,400 lbs.

The present tendency in American railway practice is toward the continued development of large single expansion locomotives having all the driving wheels coupled in one group and carrying wheel loads as heavy as track and bridges will permit. The necessity, under present conditions, of specially designing the locomotive for the work to be done is most apparent. With an extensive experience in locomotive design and construction, and a well equipped organization, The Baldwin Locomotive Works is prepared to aid railways in studying operating conditions and selecting suitable motive power.

Passenger Locomotives

There are two fundamental features of design which are essential to the success of any locomotive; first, sufficient tractive force and weight on driving wheels to start the specified train load; and, second, sufficient power developing capacity to maintain the required speed after the train is started. The second qualification depends on the boiler, which is the source of power; and insufficient capacity here means failure for the entire locomotive, no matter how well designed the other parts may be.

Passenger locomotives are required to exert a tractive force up to the limit of their adhesion only when starting heavy trains in difficult places. They must, however, develop large horsepower in fast service, and this requires high steaming capacity in proportion to weight on driving wheels.

For through passenger service four coupled locomotives are seldom built, as trains have become so heavy and schedules so difficult that locomotives with three pairs of driving wheels are usually required.

The ten-wheeled (4-6-0) type, which is shown in the illustrated section of the Dictionary on pages 173 and 174, is successful in work which is within its capacity. A locomotive of this type, built for the St. Louis Southwestern Ry., is illustrated herewith. This locomotive was designed for passenger service, uses superheated steam and has a wide firebox placed above the driving wheels, which are 69 inches in diameter.

If larger driving wheels are desired in combination with a wide firebox, the ten-wheeled type is at a disadvantage, as the depth of the furnace throat is too restricted for the advantageous use of bituminous coal as fuel. Hence for heavy fast passenger service the Pacific (4-6-2) type is generally used. This type, illustrated on pages 175, 176, 177 and 221, combines a large adhesive weight with a high capacity boiler; it has a four-wheeled leading truck, which provides excellent guiding qualities; three pairs of drivers placed under the waist of the boiler; and a two-wheel radial trailing truck under the firebox. The furnace dimensions are in no way cramped by reason of the wheel arrangement, and sufficient grate area and furnace volume can be obtained for burning any kind of fuel that is suitable for locomotive work.

The depth of the firebox, especially the vertical distance between the grate and the bottom row of tubes, has an important bearing on fuel economy when burning bituminous coal. In this type of locomotive there is room for a deep furnace throat, as the grate is placed

Locomotives

over a pair of comparatively small trailing wheels; and a satisfactory design of brick arch can be installed. The arch is an important aid to complete combustion and smoke prevention when using high volatile coal.

Superheated steam is an important feature in improving locomotive efficiency, and the majority of Pacific type locomotives recently built are equipped with superheaters. These locomotives are regularly hauling trains weighing from 600 to 800 tons, or even more, exclusive of engine and tender; and, with restricted weights and clearance limits, every means must be utilized to improve the efficiency of the locomotives engaged in such severe duty.

The lower illustration on the preceding page shows a locomotive of this type, built for the Chicago, Burlington and Quincy R. R. This engine is equipped with a superheater, brick arch and combustion chamber. It was built to develop maximum capacity with a limiting weight of 170,000 lbs. on driving wheels. By careful designing and the use of special materials for the reciprocating parts, the excess pressure on the rails, due to the centrifugal effect of the counterbalance, has been kept within low limits. At a speed of 70 miles per hour the excess pressure amounts to 38 per cent. of the static weight on the front and back driving wheels, and 28 per cent. on the main wheels. This locomotive is, therefore, less severe on the track than many other engines which carry lighter wheel loads.

Consolidation Type Locomotive. Cylinders, 26"x28". Weight, Total Engine, 249,500 lbs.

Freight Locomotives

The hauling capacity of a locomotive is primarily dependent upon the weight carried on the driving wheels, and the locomotive must be so proportioned that the tractive force developed bears a suitable relation to its weight. High tractive force, however, cannot be developed for sustained periods of time unless sufficient steaming capacity is provided. This is especially true if speed is an element of consideration, since other things being equal, the higher the speed the greater the horsepower required; and the maximum horsepower that a locomotive can develop is directly dependent upon the steaming capacity of its boiler.

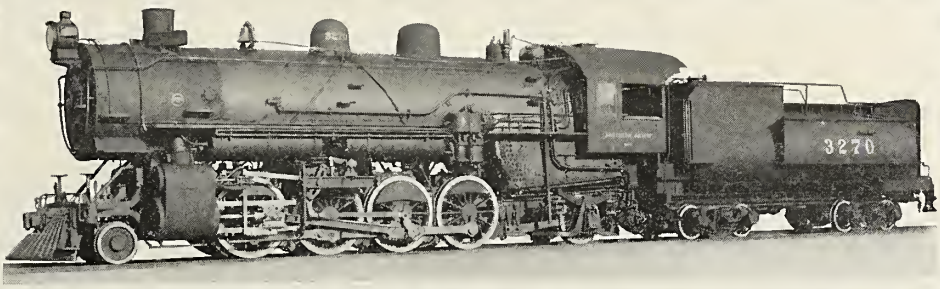

Mikado Type Locomotive. Cylinders, 26"x28". Weight, Total Engine, 280,960 lbs.

Locomotives with four pairs of coupled driving wheels handle the greater share of the freight traffic on American railroads. The Consolidation (2-8-0) type, illustrated on page 165, has been used for many years in this class of work. The Pennsylvania Lines locomotive, illustrated above, is equipped with a superheater and mechanical stoker, and represents the latest development of a highly successful series of locomotives of this type.

The Mikado (2-8-2) type, illustrated on pages 166, 168, 205 and 207, was developed from the Consolidation locomotive and provides greater steaming capacity in proportion to adhesion. The wheel arrangement permits the use of a long boiler barrel in combination with a wide and deep firebox, which is placed back of the driving wheels and over the trailing truck. The additional weight involved by reason of the large boiler is carried on the trailing truck, so that the driving wheels are not overloaded thereby. This form of firebox is specially suitable for burning high volatile coal, as there is sufficient furnace volume for the complete combustion of the gases before they enter the tubes.

With a given weight on driving wheels and equal ratios of adhesion, a Mikado locomotive will show no superiority over a Consolidation as far as starting tractive force is concerned. As the speed increases, however, the tractive force of the Mikado will fall off less rapidly than that of the Consolidation.

Mikado type locomotives, because of their wheel arrangement, are specially suitable for service where it is necessary frequently to run backward. The rear truck under such circumstances protects the driving wheels against flange wear, and guides the locomotive into sharp curves and switches without danger of derailment. It is largely for this reason that Mikado type locomotives have proved so successful on short industrial lines where powerful locomotives are needed for both switching and road service.

In the Mikado type, as in the Pacific, there is ample depth in the furnace throat to apply a satisfactory design of brick arch, which, as has been pointed out, is an important addition to the furnace equipment, especially when burning high volatile coal.

With a weight limitation of 60,000 lbs. per driving axle, which it is seldom advisable to exceed, a Mikado type locomotive can carry 240,000 lbs. on driving wheels and can exert a tractive force of 60,000 lbs. Such engines represent the maximum tractive and steaming capacity thus far attained in eight-coupled locomotives.

The Mikado type locomotive illustrated is an oil burner. It formed part of the Baldwin exhibit at the Panama Pacific International Exposition. A large number of these locomotives are in service on the Southern Pacific System, handling heavy freight traffic and also passenger traffic on mountain grades.

When conditions are such that the required tractive force cannot be exerted by an eight-coupled locomotive, a fifth pair of driving wheels may be added. In this way the 2-10-2 type, illustrated on pages 169, 170 and

Locomotives

209, has been developed. With a given allowable weight per pair of driving wheels, such a locomotive can develop 25 per cent. greater tractive force than a Mikado type locomotive and have equally high steaming capacity in proportion to adhesion. By using plain tires on the middle pair of wheels, and allowing sufficient play between wheel hubs and boxes, and rails and flanges, on the other pairs, such a locomotive can traverse sharp curves without difficulty. An engine of this type is capable of handling heavy trains at economical speeds, and is fitted for road service.

The illustration shows a 2-10-2 type locomotive built for the Baltimore & Ohio Railroad. It is of unusual capacity for a single expansion, non-articulated locomotive, as it exerts a tractive force of 84,500 lbs. with a ratio of adhesion of 3.98, thus fully utilizing the weight on the driving wheels. The wheels of the third pair of drivers have plain tires, and all the driving wheels have a total lateral play in the boxes of one-quarter inch. The play between rails and flanges is one-quarter inch more on the first and fifth pairs of wheels than on the second and fourth pairs. The side-rod knuckle-pins are fitted into spherical bushings, so that the rods have a limited amount of lateral flexibility. With this construction, the locomotive can easily traverse the sharp curves on the mountain divisions of the Baltimore and Ohio Railroad.

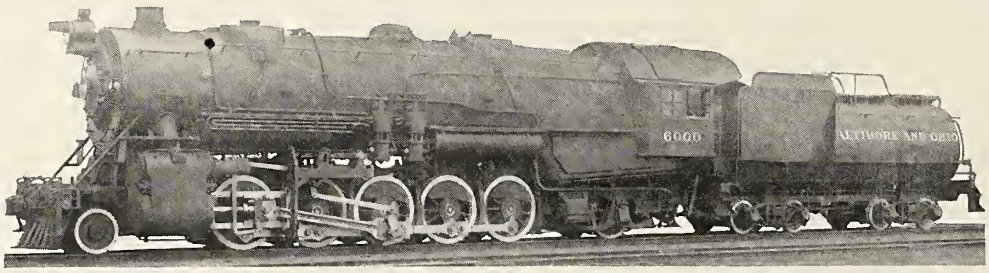

2-10-2 Type Locomotive. Cylinders, 30"x32". Weight, Total Engine, 406,000 lbs.

The boiler has a deep, wide firebox with a cumbustion chamber 28 inches long and tubes 23 feet long. There are three rings in the barrel; the third ring is tapered, with the slope placed on the bottom, thus providing a free entry to the throat under the combustion chamber.

This locomotive is equipped with a Street mechanical stoker, since the coal consumption, when developing full power, is beyond the limit of hand firing for sustained periods. The equipment further includes a Schmidt superheater and a Security arch supported on water tubes. The valve gear is of the Walschaerts type, controlled by the Ragonnet power reverse mechanism.

Because of the urgent need for increased train tonnage and lower operating costs, locomotives of this type are being used on several of the leading railways in the United States; and they are proving unusually successful in heavy service.

Pusher Service

The use of Mallet articulated compound locomotives is now practically confined to pushing service on heavy grades, or to road service where operating conditions are unusually severe and engines of high tractive force are required.

The Mallet articulated type, illustrated on pages 180, 181, 182, 183, 186, 228, 230 and 233, employs two groups of driving wheels and compound cylinders. The rear group is driven by the high pressure cylinders and the forward group by the low pressure. The rear frames are in rigid alignment with the boiler, while the front frames can swing about a hinge pin located on the center line of the locomotive between the high-pressure cylinders. The forward group of wheels thus constitutes a truck, giving sufficient flexibility to the wheelbase to enable the engine to traverse sharp curves with ease.

The receiver pipe between the high and low pressure cylinders, and the exhaust pipe from the low pressure cylinders to the smoke box, are necessarily provided with flexible joints; but as these pipes carry steam of moderate pressures only, practically no difficulty is experienced in keeping the joints tight.

The majority of these locomotives are equipped with leading and trailing trucks, which improve the curving qualities and protect the driving wheels against excessive flange wear.

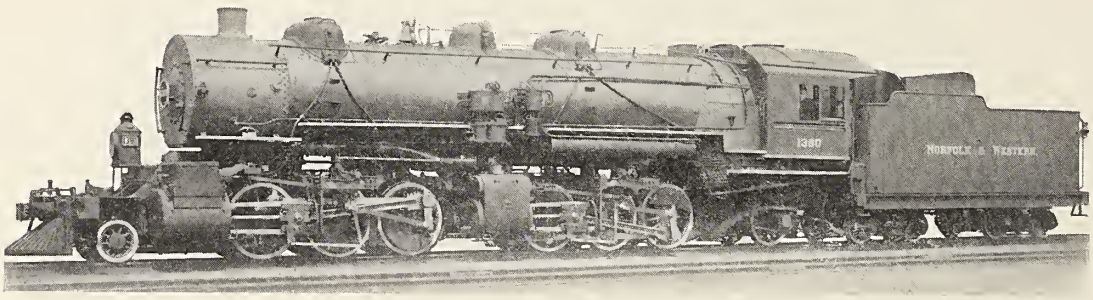

Mallet Articulated Compound Locomotive. Cylinders, 22" and 35"x32". Weight, Total Engine, 411,700 lbs.

The Norfolk & Western Railway has a large number of Mallet locomotives in service. They are equipped with brick arches, superheaters, and mechanical stokers, and are proving most successful in heavy service on mountain grades. One of them is herewith illustrated.

A more advanced type of compound locomotive has recently been developed and built by The Baldwin Locomotive Works for the Erie Railroad. This locomotive is a

Locomotives

Triple Articulated Compound, and is used in pusher service. The unusual feature is a steam driven tender. This locomotive exerts a tractive force of 160,000 lbs. working compound, and in this respect exceeds any other steam locomotive thus far built. The wheel arrangement is 2-8-8-8-2, the rear group of drivers and the trailer truck being placed under the tender section. Flanged tires are used on all the wheels. The total weight of the locomotive is 853,050 lbs. Approximately 90 per cent. of this is available for adhesion. The advantage of this is most apparent in service on heavy grades, where the weight of the tender materially detracts from the net hauling capacity of a locomotive of the ordinary type.

usually large superheating surface of 1584 square feet.

The Baker valve gear is used throughout, and the three sets of gears are controlled simultaneously by the Ragonnet power reverse mechanism.

Two feedwater pumps are used to supply the boiler with hot water from the feedwater heater. Two injectors are also provided for use in case of emergency.

A notable feature of this locomotive is that it embodies comparatively few details that have not been fully tried out in service. The cylinders, cylinder saddles, steam piping and articulated joints closely follow in design the best Mallet locomotive practice.

This locomotive is shown in the accompanying illustration and also on page 187.

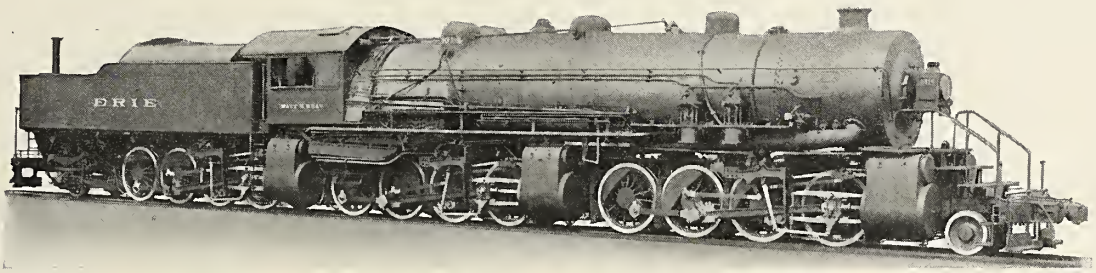

Triple Articulated Compound Locomotive. Cylinders (6), 36″ x 32″. Weight, Total, 853,050 lbs.

This locomotive has six cylinders, two driving each group of coupled wheels. These cylinders are all the same size, two acting as high-pressure and four as low-pressure. The two high-pressure cylinders drive the second group of wheels. The right-hand high-pressure cylinder exhausts into the two front low-pressure cylinders, while the left-hand high-pressure cylinder exhausts into the two rear low-pressure cylinders which are placed under the tender section. The exhaust from the front low-pressure cylinders escapes up the stack, thus creating a draft for the fire: while the exhaust from the rear low-pressure cylinders is discharged through a pipe at the back end of the tank. These cylinders are located at the forward end of the tender section; and the exhaust steam, before escaping to the atmosphere, passes through a feedwater heater.

The weight carried by the rear group of wheels is necessarily variable, and the rear engine is designed to develop less tractive force than either of the other two. This has been accomplished by using different steam laps on the valves, as well as different valve travels. With the water tank and fuel space nearly empty, there will still be enough weight on the rear group of driving wheels to develop full tractive force. Since, however, this locomotive will be employed chiefly for short runs in pusher service, there will usually be an ample supply of fuel and water in the tank when the engine is working at its maximum power.

The boiler is of the conical type. It has a Gaines firebox, in combination with a combustion chamber 54 inches long, which extends forward into the boiler barrel. This construction permits the use of tubes 24 feet long, this length being within the limits of good practice.

This locomotive, when working at full power, consumes more coal than can be fired by hand, and a Street mechanical stoker is applied.

The superheater is of the Schmidt top-header type, composed of fifty-three elements, and presenting the un-

Industrial Service

In no branch of the steam locomotive industry are experience and ingenuity required to a greater extent than in the designing and building of locomotives for industrial and contractors' service. This is chiefly because of the unusual conditions which must be met. Clearance limits are frequently restricted; curves are unusually sharp and grades steep. Tracks are often poorly surfaced and adequate repair facilities are lacking. Local conditions at times compel the use of fuel and water of inferior quality, and the boilers with their accessories must be designed accordingly. The nature of the service often requires special equipment in the way of brakes, couplers, headlights and other fittings, and all these features must be given due consideration in the preparation of the design. Many different types adapted to this service are shown in the illustrated section of the Dictionary on pages 154 to 161, 163, and 196.

Operating conditions around large industrial plants frequently approximate those found in freight yards and terminals, and locomotives of standard switching types are often used in industrial work. The 0-6-0 type locomotive for the Standard Oil Company of New Jersey, Inc., illustrated on the following page, represents a design which is extensively employed for heavy industrial switching where standard gage rolling stock must be handled. This locomotive is equipped for burning oil, but can be changed to burn hard coal if desired. It is operating on curves of 46 degrees and grades of seven per cent. Locomotives of this type are extensively used in heavy railroad contracting work and also in open-pit iron ore mining.

The locomotive for the Lehigh Valley Coal Company, also illustrated on the following page, is of narrow gage, and represents a design which is specially fitted for light industrial and contractors' service. This engine is strongly

Locomotives

built, with heavy frames and spring rigging. The bumpers are of unusual depth, so that in case of derailment the machinery and brake work will be protected, to a great extent, against damage. The tank is extended to the front end of the smokebox, in order to gain capacity. Engines of this general type are designed for the roughest service to which a locomotive can be subjected.

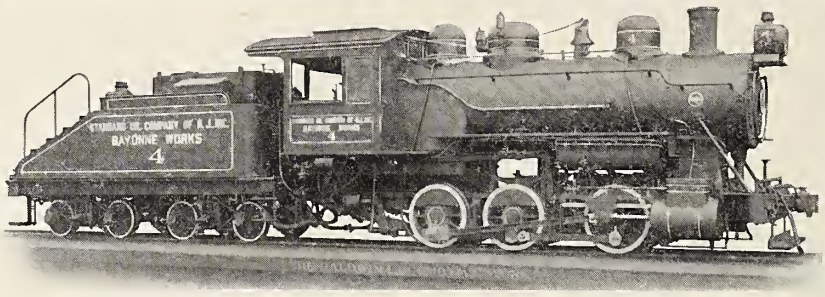

Six-wheeled Switching Locomotive. Cylinders, 19"x24". Weight, Total Engine, 108,000 lbs.

Logging railways are characterized by uneven tracks, sharp curves and steep grades; and locomotives of the double-ender pattern, with from two to four pairs of driving wheels, are best suited for this work. The bottom illustration shows a Baldwin locomotive of the 2-6-2 type, built for the Industrial Lumber Company. The wheel arrangement and equalization used in this design cause the engine to ride steadily on uneven tracks, and to enter sharp curves and switches without danger of derailment when running in either direction. A further advantage of this wheel arrangement is that a large boiler can be used without imposing excessive loads on the driving wheels. The locomotive shown is a wood-burner, and is equipped with the Radley and Hunter stack. The boiler has a deep firebox of such proportions that, with suitable changes in the equipment, either coal or oil could be used.

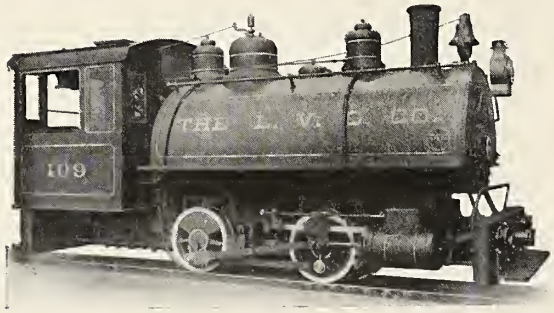

Tank Locomotive for Industrial Service. Cylinders, 10"x16". Weight, Total Engine, 39,150 lbs.

The steam locomotive is the most desirable form of motive power to use in plantation service, because it is independent of any external source of power, and can be designed to meet any specified conditions which come within the range of practical railroad operation. On any large plantation, mechanical haulage is practically indispensable; and, in the majority of cases, steam locomotives are given preference.

Many different types of locomotives have been built by this company for plantation service. They vary in type and capacity from light, four coupled engines, suitable for switching service and short hauls, to large engines of the Consolidation (2-8-0) type, which are qualified for road service. Consolidation locomotives are frequently used where there is a haul of some length from the fields to the mill. Many of them have been built for narrow gage track and are of unusual capacity in consideration of the weight and clearance limits imposed. Locomotives of the Mogul type are also used. Several of these of standard gage, equipped with superheaters, have recently been built for plantation service in Cuba.

The locomotive for the Pioneer Mills Company, Hawaii, shown below, is a narrow gage tank engine with two-wheeled trailing truck. It is an oil burner, and the fuel tank is placed at the rear. This design is suitable for short hauls; when longer trips must be made, locomotives with separate tenders should be used.

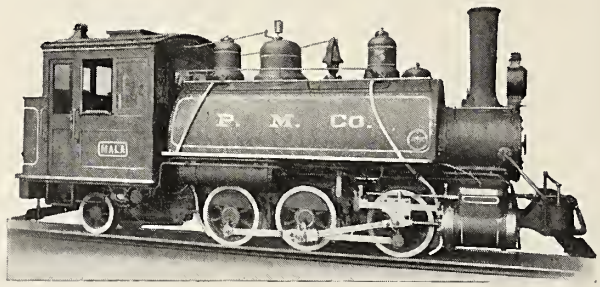

Tank Locomotive for Plantation Service. Cylinders, 11" x 16". Weight, Total Engine, 48,400 lbs.

Gasoline Locomotives

Gasoline locomotives, as illustrated on pages 189 and 190, and also on the following page, have important advantages for light industrial, contractors' and plantation service. These locomotives are independent of any external source of power, and at the same time consume no fuel while standing idle. This feature is of special importance in plantation service. During the grinding season the mills are kept busy, but when the mills are not grinding, the work is intermittent. Here the gasoline locomotive has the advantage of being ready for work at any time, but the fuel charges amount to nothing while it is idle.

Baldwin gasoline locomotives are designed, as far as possible, in accordance with steam locomotive practice. They have a positive drive from engine to wheels, no chains or other delicate mechanism being connected with the transmission. The wheels are driven

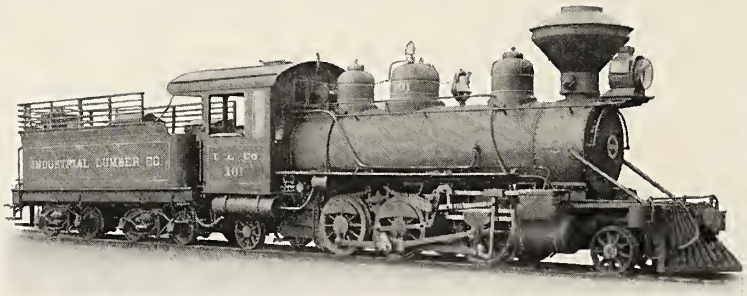

Six-Coupled Locomotive for Logging Service. Cylinders, 16"x24". Weight, Total Engine, 100,700 lbs.

Locomotives

through scotch-yoke side-rods. These are attached to cranks which are placed 90 degrees apart and are keyed to a jack shaft. All the control levers are within easy

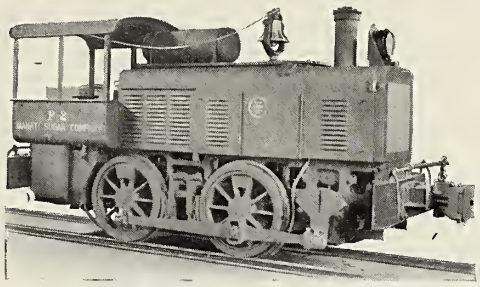

Gasoline Locomotive for Plantation Service. Weight, 9 Tons.

reach of the motorman, who can observe the engine and give it minor adjustments without leaving the cab.

These locomotives are built in four standard sizes, weighing 3½, 5, 7 and 9 tons, respectively. If necessary, other sizes can be furnished to meet special requirements.

Electric Trucks

The electric motor and trailer trucks, designed and built by The Baldwin Locomotive Works, combine the same engineering skill and excellence of workmanship that have given the other products of these works their reputation. These trucks are as light as is consistent with strength, and are so accurately built as to have the lowest possible rolling resistance. They, therefore, consume the minimum of electric current for their propulsion, and furnish high efficiency in service. The heaviest

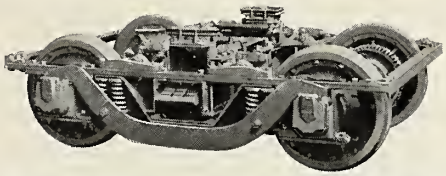

Electric Motor Truck for High-Speed Interurban Service. Carrying Capacity, 35,000 lbs.

trucks used in interurban service are suitable for speeds up to 75 miles per hour. They are of the equalized pedestal type, with forged steel side frames and angle iron end frames. The side frames and channel transoms are united by heavy cast steel gussets which serve as supports for the brake-work. Double coil equalizing beam springs and triple elliptic bolster springs insure easy riding qualities. This design of truck is specially fitted for work under heavy "limited" cars such as have been used extensively on electric railway lines during recent years, and for service on the electrified sections of steam railroads. It is also suitable for use under heavy double truck electric locomotives.

Baldwin electric trucks are built in sufficient variety to meet all the requirements of electric railway service. They are simple in construction and can be easily repaired in a railway shop. Accurate workmanship and the use of the best materials insure reliability in service and economy in maintenance.

Locomotives for Export

The Baldwin Locomotive Works has been exporting locomotives since the year 1838, when two engines were shipped to Cuba. The export business is now an important part of the industry. Locomotives of American design, with their flexible wheel bases, equalized wheel loads, and strong, simple construction, are particularly suitable for colonial and newly developed countries where steep grades, sharp curves and uneven tracks are often encountered.

Quick delivery is often required in the case of locomotives built for export. The facilities of The Baldwin Locomotive Works are such that orders can, if necessary, be filled with unusual dispatch.

Locomotives of all types have been built for export. The 2-10-2 locomotive illustrated below, however, is of unusual capacity for a narrow gage line. It was built for the C. de F. de Lourenço Marques Railway, Portuguese East Africa, and represents a type which is being used in the United States to an increasing extent for heavy freight service.

Sales Organization

Principal Offices and Works, 500 North Broad Street, Philadelphia, Pa. London Office, 34 Victoria Street, S. W. Cable Addresses: "Baldwin, Philadelphia"; "Fribald, London."

OFFICERS:

William L. Austin.....Chairman of the Board
Alba B. Johnson.....President
Samuel M. Vauclain.....Vice-President
William de Krafft.....Secretary and Treasurer
John P. Sykes.....General Superintendent

REPRESENTED BY

F. W. Weston.....50 Church Street, New York, N. Y.
G. F. Jones.....407 Travelers Building, Richmond, Va.
Charles Riddell.....625 Railway Exchange, Chicago, Ill.
C. H. Peterson.....1210 Boatmen's Bank Building, St. Louis, Mo.
A. W. Hinger.....722 Spalding Building, Portland, Ore.
Argentine Republic....Samuel B. Hale Co., Ltd., Buenos Aires
Brazil .....Norton Megaw & Co., Ltd., Rio de Janeiro
Chile .....Wessel, Duval & Co., Valparaiso
China .....Andersen, Meyer & Co., Ltd. Shanghai
Hawaiian Islands.....C. Brewer & Co., Ltd., Honolulu
Japan .....Frazar & Sale, Tokio
New South Wales.....R. Towns & Co., Sydney
South Africa.....A. H. Johnson & Co., Ltd., Cape Town
Republica de Colombia..G. Amsinck & Co., 6 Hanover Street, New York, N. Y.
Russia .....John M. Lassmann, Petrograd
Portugal .....E. Pinto Basto & Co., Lisbon
Victoria .....Newell & Co., Melbourne
New Zealand.....Philips & Pike, Wellington
Western Australia.....Leslie & Co., Perth
West Indies.....Wallace R. Lee, National Bank of Cuba Bldg., Havana, Cuba

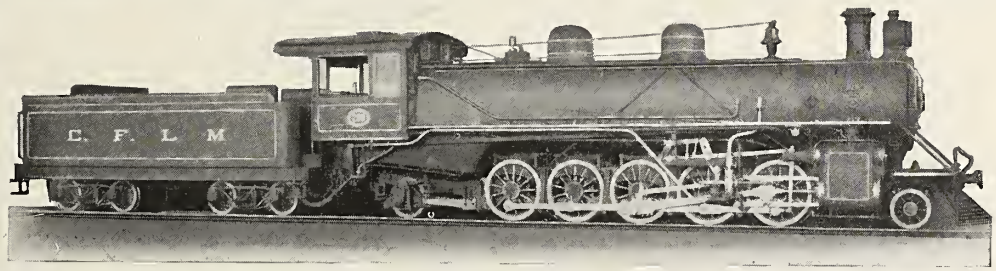

Narrow Gage, 2-10-2 Type Locomotive. Cylinders, 21½" x 24". Weight, Total Engine, 179,100 lbs.

Lima Locomotives

Lima Mallet Locomotive for Western Maryland Railway

Ranging among the heaviest and most powerful of their class are the Mallet type locomotives with 2-8-8-2 wheel arrangement lately designed and built by the Lima Locomotive Corporation for the Western Maryland Railway. The cylinders of these locomotives are 26-in. and 40-in. diameter respectively for the high and low pressure engines. The piston stroke is 30 in. applied to driving wheels 52-in. diameter, giving, with 210 lbs. boiler pressure, a maximum tractive power of 106,000 lbs. while working compound. They are fitted with the "Simplex" intercepting valve, which allows a simpling feature temporarily raising tractive power to 127,000 lbs. The weight on drivers is 445,000 lbs. and the consequent factors of adhesion are 4.19 compound and 3.52 simple.

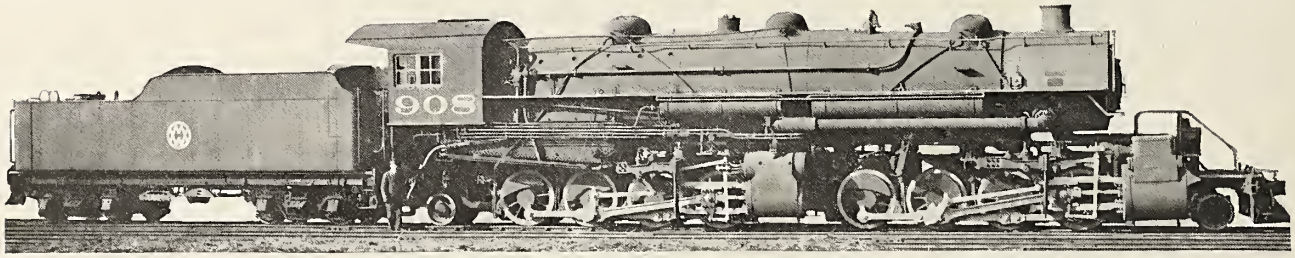

View of Complete Engine, Western Maryland Mallet Locomotive.

Service

They are intended for heavy freight service for hauling trains of 2,000 tons on heavy grades and sharp curves of the Western Maryland Railway Company's Mountain divisions.

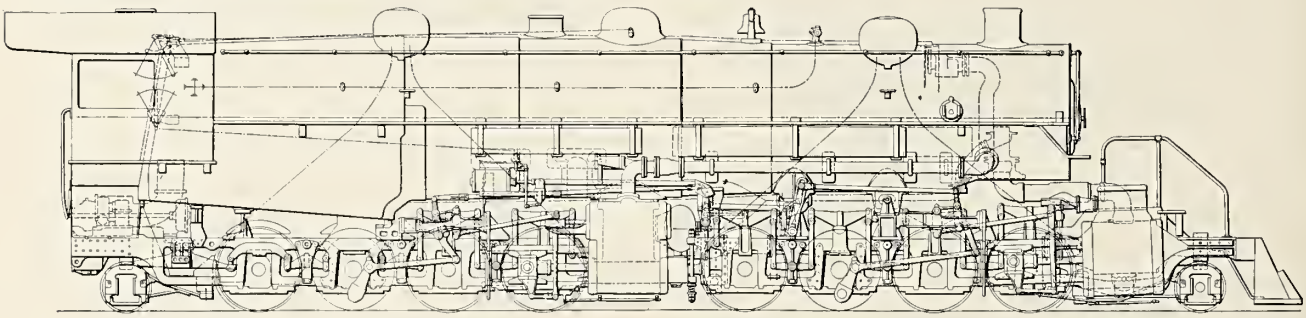

General Plan, Western Maryland Mallet Locomotive.

Interesting Features in Construction

The most interesting features of the design are the details of compounding and steam distribution, which differ considerably from any engines of the same type previously built. The intercepting valve is of the simplest form yet devised and is arranged in a chamber casting independent of the cylinders. This arrangement allows a very simple design of high pressure cylinder, the right and left hand section of which are interchangeable and reversible, a feature never before accomplished in a Mallet locomotive having a separate exhaust for the high pressure cylinders. The location of the intercepting valve chamber is transverse instead of fore and aft and the internal parts of the valve can be readily reached for examination or replacement without going between the frames. This feature is especially valuable from a maintenance standpoint. The details of articulated steam joint have been simplified by making all ball rings and packing interchangeable between all steam and exhaust joints, while the rings themselves are of simplified design in interchangeable pairs for each joint.

The steam distribution is by two sets of Baker valve gear actuated by a Ragonnet reversing engine and the valves are set to give 90 per cent full gear cutoff in the high pressure cylinders with 83 per cent full gear cutoff in the low pressure ones. The high and low pressure valve gears are coupled by a device known as the "Economy Expansion Regulator," the first installation of which occurs on these engines. This device consists of a controlled scotch yoke on the connecting shaft which shows up the cutting off of the low pressure engine by automatically reducing the throw of the connecting shaft arm. When the high pressure engine is "hooked up" the cutoff decreases more rapidly than does the cutoff of the low pressure engine with any given amount of movement of the reverse lever. The advantage of this arrangement is to keep the high and low pressure engines more nearly equal at all running speeds.

These locomotives are the first ones to be equipped with the long main journals on both units, a construction not heretofore considered possible on Mallet engines on account of obstructions by the receiver pipes and firebox suspension. The front truck is the well-known "Economy" type with center bearing equalized with the front drivers. The rear truck is also of the "Economy" type with constant resistance cams, modified to obtain side bearing features in connection with the equalization to the rear driving wheels.

The boiler on ten of these locomotives, see Engine 901, "General Dimensions," is of the conical wagon top type, 92-in. diameter outside of its smallest ring and 102-in. diameter at its largest one. This boiler has ordinary type firebox with a combustion chamber 48 in. deep. Five locomotives are built with boilers equipped with Jacob-Shupert fireboxes, see Engine 911, "General Dimensions," and differ only from the other ten in the style and dimensions of the boiler.

Lima Locomotives

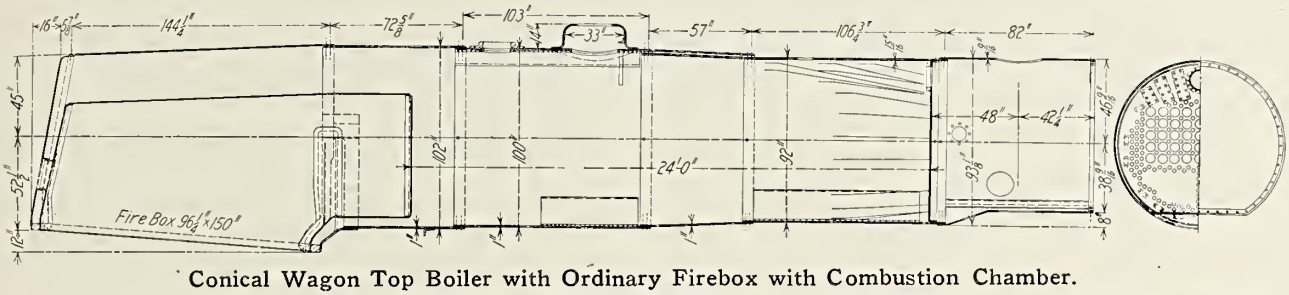

Conical Wagon Top Boiler with Ordinary Firebox with Combustion Chamber.

GENERAL DIMENSIONS

	Engine 901	Engine 911
Gage	4 ft. 8½ in.	4 ft. 8½ in.
Service	Freight	Freight
Fuel	Soft Coal	Soft Coal
Tractive power, compound	106,000 lbs.	106,000 lbs.
Tractive power, simple	127,000 lbs.	127,000 lbs.
Weight in working order	495,000 lbs.	495,000 lbs.
Weight on drivers	445,000 lbs.	445,000 lbs.
Adhesive factor, compound	4.19	4.19
Adhesive factor, simple	3.52	3.52
Wheel base, engine	56 ft. 8 in.	56 ft. 8 in.
Wheel base, driving	40 ft. 8 in.	40 ft. 8 in.
Wheel base, rigid	15 ft. 0 in.	15 ft. 0 in.
Wheel base, engine and tender	91 ft. 1½ in.	91 ft. 1½ in.

CYLINDERS.

High pressure diameter	26 in.	26 in.
Low pressure diameter	40 in.	40 in.
Piston stroke	30 in.	30 in.

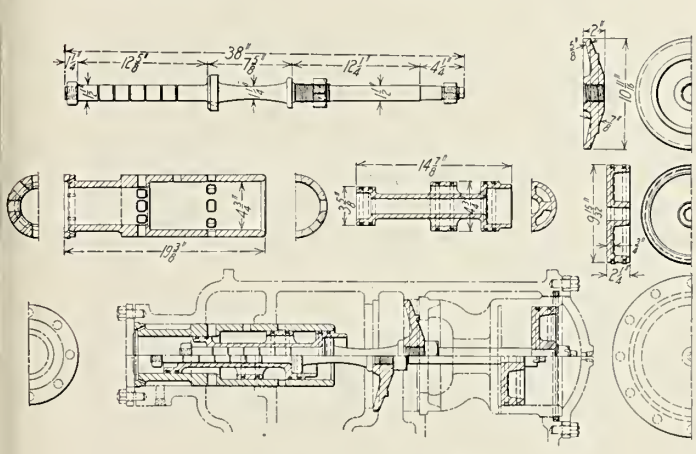

Detail of Intercepting Valve.

VALVES.

Type, high pressure	American Semi-plug	American Semi-plug
Diameter	14 in.	14 in.
Type, low pressure	Jack Wilson Slide	Jack Wilson Slide
Steam port length	29 in.	29 in.

WHEELS.

Driving, diameter over tires	52 in.	52 in.
Driving, thickness of tires	3½ in.	3½ in.
Main journals, size	11 in. x 20 in.	11 in. x 20 in.
Other journals, size	9 in. x 12 in.	9 in. x 12 in.
Engine truck wheel diameter	30 in.	30 in.
Engine truck wheel journals	6 in. x 12 in.	6 in. x 12 in.
Trailing truck wheel diameter	30 in.	30 in.
Trailing truck journals	6 in. x 12 in.	6 in. x 12 in.

BOILER.	Engine 901	Engine 911
Type	Conical Wagon Top.	Straight Top.
Working pressure	210 lbs.	210 lbs.
Outside diameter, first ring	92 in.	92 in.
Outside diameter, largest ring	102 in.	96 in.

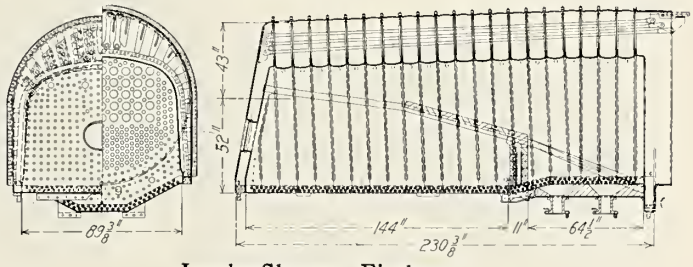

Jacobs-Shupert Firebox.

Firebox length by width	150in.x96¼in.	219½x89⅜ in.
Effective length of firebox	120 in.	144 in.
Mud ring width, front	5 in.	5 in.
Mud ring width, sides and back	4½ in.-4½ in.	4 in.-5 in.
Tubes, number and diameter	266-2¼ in.	266-2¼ in.
Flues, number and diameter	45-5½ in.	45-5½ in.
Tubes and flues, length	24 ft.-0 in.	22 ft.-9⅝ in.
Gaines combustion chamber, length	26½ in.	64½ in.
Barrel combustion chamber, length	48 in.	none
Heating surface, firebox	360 sq. ft.	388 sq. ft.
Heating surface, arch tubes	44 sq. ft.	59 sq. ft.
Heating surface, tubes	3747 sq. ft.	3614 sq. ft.
Heating surface, flues	1550 sq. ft.	1406 sq. ft.
Heating surface, total evaporative	5701 sq. ft.	5477 sq. ft.
Superheating surface	1380 sq. ft.	1310 sq. ft.
Equivalent heating surface	7771 sq. ft.	7442 sq. ft.
Grate area	80 sq. ft.	89.3 sq. ft.
Front end arrangement	Mudge-Slater	Mudge-Slater
Smoke stack, diameter	20 in.	20 in.
Smoke stack, height above rail	16 ft. 0 in.	16 ft. 0 in.
Center of boiler above rail	10 ft. 0 in.	10 ft. 0 in.

TENDER.

Tank type	Water Bottom	Water Bottom
Frame type	Built-up	Built-up
Truck type	Economy	Economy
Tank capacity	105,000 gals.	105,000 gals.
Fuel capacity	15 tons	15 tons
Screw conveyor for	Standard Stoker	Standard Stoker
Wheel diameter	33 in.	33 in.
Journal sizes	6 in. x 11 in.	6 in. x 11 in.
Weight, fully loaded	190,000 lbs.	190,000 lbs.

Austin Improved Trailing Truck

The Austin Trailing Truck

Supplying the Austin Improved Trailing Truck on engines of the Pacific, Mikado or similar types is a feature exclusive with the Lima Locomotive Corporation, Lima, Ohio. See Fig. 1021, Text Page 473, Austin Trailing Truck as applied to Pacific Type Locomotive.

Description

The component frame members are simple and easily assembled. The frames right and left are interchangeable and reversible. The radius bar is made in heavy rectangular section and is well attached to a separate cast steel radial hinge. The rear end of the framing is composed of two side bars adjoining the cast steel frame and a cross bar connecting transversely. On this bar is mounted a centering device, but this centering device is unnecessary and can be omitted if desired. the features of the truck being so arranged that "gravity centering" is accomplished through medium of the heart-shaped links, which are component parts of the suspension cradles, both front and back of the wheels. The suspension cradles consist of cross-equalizer. The rear cradles are attached to the outside spring hangers and in turn suspended from a positive fulcrum by the heart-shaped links which are somewhat in the form of universal couplings. The lower portion of these links has a spherical head which allows twisting movements in all directions and also allows the transverse radial motion for the entire cradle. The first knuckle joint above these spherical ends allows a fore and after movement, so that when the truck radiates the apparent lengthening and shortening of the side members is fully accounted for. The transverse movement of the cradle is governed at the bottom by the spherical head, but at the top by two pins connecting the heart links with the cradle. These pins give a positive bearing while the engine is on a straight track and assure stable equilibrium on account of their three points suspension effect. When transverse movement on the cradle occurs the heart links radiate from one or the other of their pins, according to the direction of movement and always tend to recenter by falling back on the double pins; the condition of the link while raised on one pin being always one of unstable equilibrium. The truck is thus a gravity suspension truck, and is similar in its action to any other positive heart-shaped link, such action being well demonstrated by front trucks having this type of bolster suspension.

Advantages

By use of this truck the rear end of the engine is held in alignment with the drivers by the force of gravity, instead of helical centering springs. The cradle, being essentially the same on the front of this truck as at the rear, is not restrained by any jaw or contrivance on the frame and is not liable to nip off outside the frame. The action of this truck on a curve shows very little angular stress on any one component member of the cradle construction, due to transverse flexibility, which occurs not only at the spherical end of the heart link, but also at the top or centering end as well as at the outside connection of the cradle to the spring hanger. The separate journal box of the Austin Truck fitted in a cast steel frame permits removal from the frame without further dismantling the truck.

The radius bar of the Austin Truck is so arranged as to be approximately on the center line with the thrust against the axle, and thus greatly improves the strength of the structure. The employment of this truck permits the use of the simple slab engine frame construction which has no auxiliary pedestal or pedestal binder below the axle, which must be removed when assembling the truck.

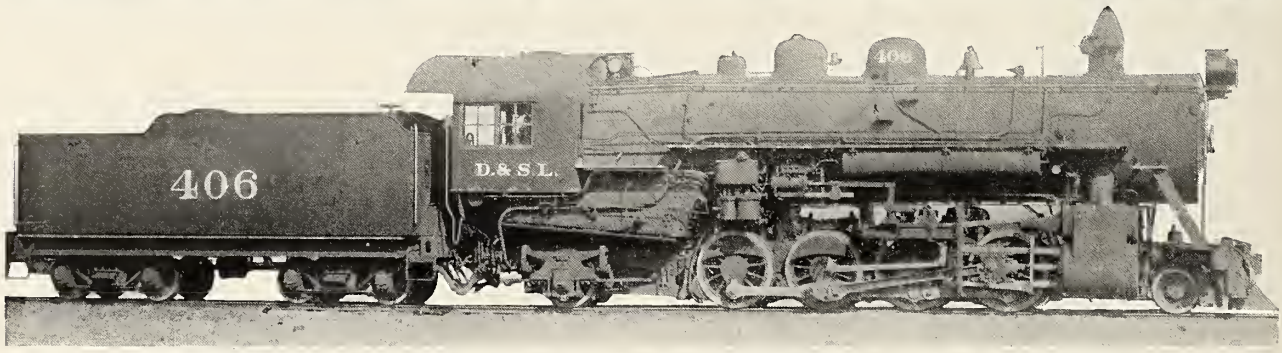

Mikado Locomotive, built by Lima Locomotive Corporation for Denver & Salt Lake R. R., fitted with Austin Trailing Truck.

The Mikado Type Locomotive, built for the Denver & Salt Lake Railroad, is constructed with Austin Type Trailer Truck. This locomotive has 26 in. x 30 in. cylinders; weight on drivers, 231,000 lbs.; weight total in working order, 294,000 lbs.; tractive power, 57,800 lbs.; wheel base, driving, 15 ft. 9 in.; wheel base, total, 34 ft. 11 in.; diameter of driving wheels, 55 in.; boiler straight top, 81½ in. diameter at first ring.

Lima Mountain Type Locomotive—See Fig. 73, Text Page 178.

Lima Pacific Type Locomotive—See Fig. 65, Text Page 175.

Lima Steam Storage Locomotive—See Fig. 94, Text Page 188, Fig. 145, Text Page 236.

Lima Four Wheel Saddle Tank Locomotive—See Fig. 5, Text Page 153, Fig. 101, Text Page 193.

Lima Shay Geared Locomotives—70-Ton and 100-Ton. See Fig. 95 and Fig. 96, Text Page 189, Fig. 143, Text Page 234 and Fig. 583, Text Page 364.

Riegel Firebox for Pacific Type Locomotive—See Fig. 146, Text Page 237, Fig. 163, Text Page 243 and Fig. 197, Fig. 198, Fig. 199, Text Page 257.

Lima Mikado Type Locomotive—See Fig. 40, Text Page 167.

Lima Straight Top Boiler for Six-Wheel Switching Locomotive, Fig. 155, Text Page 240.

Lima Conical Type Boiler for Mountain Type Locomotive—Fig. 178, Text Page 248.

Lima Screw Reverse Gear—Fig. 779, Text Page 415.

Lima Tank Hose Strainer and Clamp for Tank Hose Strainer—Fig. 1827 and Fig. 1829, Text Page 672.

The Jacobs-Shupert Sectional Firebox

Description

In the construction of the Jacobs-Shupert firebox, the side, crown and wrapper sheets have been replaced by a series of semi-elliptic channel-formed sections riveted together with their flanges turned away from the fire. Staysheets are used in place of staybolts, a staysheet being interposed between each adjacent set of channel sections and securely held thereto by the same rivets which hold the sections together. Ample openings through staysheets in the water space provide for circulation of the water about the firebox. The edges of these staysheets serve as calking strips for making tight joints between the channel sections.

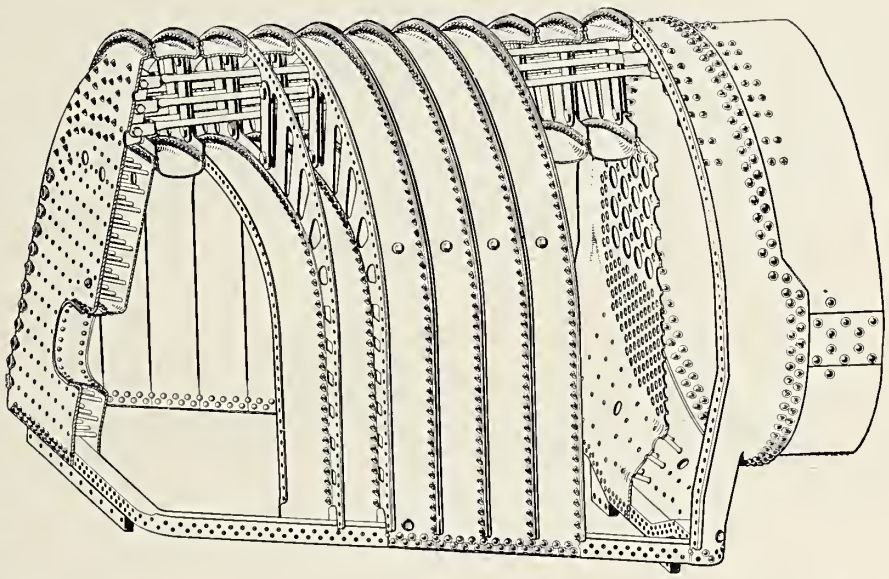

The seams between the inside sections are submerged and the joints of the outer or wrapper sections are entirely accessible from the outside of the firebox. No seams are exposed to the fire.

The inside channel sections are fastened to the mud ring by cutting off the flanges from the point where the staysheet ends to the bottom of the mud ring, the section being flattened against the mud ring and riveted. The butt joint thus formed between sections is welded by means of the oxy-acetylene method.

Inside sections adjacent to the door sheet and flue sheet are similarly butt jointed and welded at the mud ring. The flanges of the outside sections are cut off below the top of the mud ring and the section is flattened so that a plain butt joint between each section is formed along the outside of the mud ring, the sections being held by rivets passing through the mud ring and the inside sections. The mud ring is of the ordinary type and the sections are secured to it by either a double or single row of rivets.

For pressures up to 200 lbs. the staysheets are made of ⅜ in. steel plate. The flanged sections have a uniform standard width of 9⅝ in. over the flanges and are made of 5/16 inch firebox steel. A large section is cut out of each staysheet over the crown of the firebox, the necessary support in this location being secured by means of removable sling stays. Liberal openings are also provided just above the mud ring to facilitate circulation and permit thorough flushing out of scale and mud.

The flue sheet and door sheet are each pressed with an offset about 4 in. deep and with outwardly extending flanges for riveting to adjacent staysheets. The throat sheet, and section which connects the firebox to the barrel of the boiler is formed under hydraulic pressure from one piece of steel and is riveted directly to the outer edge of the front staysheet.

The flat surfaces of the door sheet and back-head are supported by means of staybolts and boiler braces in the usual manner.

Wash-out holes are provided at the crown sheet level on each side of each of the outside sections. There are also wash-out plugs, just above the mud ring, in each corner of the box and in the center outside section on each side.

Advantages

Due to its sectional construction and elimination of staybolts, the Jacobs-Shupert firebox is proof against violent or disastrous explosions. Violent explosions are usually due to overheating of the sheet causing a loss of holding power of the staybolts. The flat sheet bulges under the pressure within and the slightest rupture quickly spreads across the entire sheet. This suddenly liberates the pressure on the highly heated water and it flashes into steam with the destructive force of gunpowder.

If a rupture occurs in the Jacobs-Shupert firebox it cannot spread and no sudden release of pressure can take place. The internal pressure would therefor relieve itself gradually and no explosion would occur.

The flexibility of the arched sections provides freedom of expansion without excessive strains.

Tests have proved that overheating does not seriously injure the firebox. The severest punishment the sheets received in low water tests was the bulging of the sections. These tests resulted in no permanent injury to the boiler.

The elimination of staybolts, except in the back-head and throat sheet, materially decreases the main item of locomotive maintenance, namely staybolt inspection and renewal.

The Jacobs-Shupert firebox eliminates the necessity of removing the brick arch for periodic inspection of the staybolts as there are no staybolts in the sides or crown.

More engine days per year, ability to build large fireboxes without structural weaknesses, safety and low maintenance costs are the principal advantages which have been demonstrated by the more than 300 Jacobs-Shupert fireboxes now in service.

Electric Locomotives

G. E. Locomotives on C., M. & St. P.

The electrification of the Chicago, Milwaukee & St. Paul Railway across the great state of Montana presages the completion of the greatest project ever attempted in the history of heavy railroading. The confidence of the executive heads in electric propulsion is based on the most searching investigations, and their wisdom and foresight in adopting electric train haulage on so large a scale deserve commendation.

Most important savings will be accomplished in hauling the enormous freight trains over the mountains. This task has taxed steam locomotives to their limit, and electrification by removing these restrictions to freight transportation over mountain grades, increases the capacity of the entire railway system.

The first electric zone extends from Harlowton, Montana, westward a distance of 440 miles to Avery, Idaho. Including yards and sidings the electrified trackage totals 650 miles.

While the system adopted is hailed as a new departure in electric railroading, it is in many respects an extension of the old and well-tried trolley system accepted as standard in almost every city in the world. The high voltage direct current system, as advocated by the General Electric Company, embraces the use of the well-known series motor, the characteristics of which are eminently adapted to train haulage. The great engineering resources of the General Electric Company have been called upon to perfect the electrical features of a system having a trolley operating at five times the ordinary 600 volts, or 3000 volts.

In addition to this conspicuous advantage, the General Electric Company has perfected a method of regeneration on down grades which is the first successful attempt at recuperating energy on a direct current system. The method adopted allows the engineer to return energy to the line in varying amounts, depending upon the gradient, thus controlling the train speed and saving wear on the mechanical brakes.

Briefly, the electrification of this part of the road will require forty-two 282-ton electric locomotives, 14 completely equipped electrical substations and trolley construction over the entire 650 miles of track. These locomotives are by far the most powerful ever constructed, either steam or electric.

The electric locomotive has a hauling capacity one-third greater than the steam engine and tender of about the same total weight. It has approximately the same weight per axle and is provided with a four-wheel guiding truck in place of two-wheel, requires no turntable as it operates equally well in either direction, and, finally, eliminates the necessity for stopping to take on coal and water.

Electrical Equipment

Each locomotive carries eight 430-horse-power motors each geared to a driving axle thus giving a total of 3440-horsepower per locomotive. The tractive effort available for starting trains will approximate 135,000 pounds at 30 per cent coefficient of adhesion. These motors are designed to operate at 1500 volts across each commutator, two motors being connected in series across the 3000-volt circuit.

The control equipment is the well-known Sprague-General Electric Type M arranged for multiple unit operation. This allows two locomotives to be operated from a single master controller

The locomotive is equipped with two pantographs, one located at each end for collecting current from the overhead trolley.

The general data applying to the electric locomotives are as follows:

Type of locomotive	3000 volts direct current
Length overall	112 ft.
Total wheel base	102 ft. 8 in.
Rigid wheel base	10 ft. 6 in.
Total weight	564,000 lb.
Weight on drivers	448,000 lb.
Weight per driving axle	56,000 lb.
Weight per guiding axle	29,000 lb.
Diameter of driving wheel	52 in.
Diameter of guiding wheel	36 in.
Number of driving motors	8
Total output (continuous rating)	3000 h.p.
Total output (1 hour rating)	3440 h p.
Tractive effort (continuous rating)	71,000 lb.
Tractive coefficient at continuous rating	15.83
Speed at this tractive effort at 3000 volts	15.75 m.p.h.
Tractive effort (1 hour rating)	85,000 lb.
Tractive coefficient at one hour rating	19
Speed at this tractive effort at 3000 volts	15.25 m.p.h.

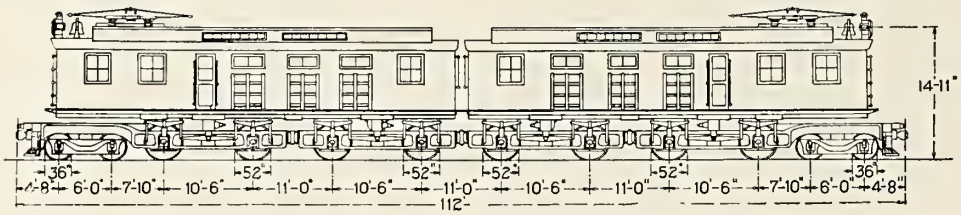

Outlines and Dimensions, Chicago, Milwaukee & St. Paul Railway Electric Locomotive.

The same type of locomotive is used for both passenger and freight service, the only difference being the gear ratio which is 4.56 for freight and 2.45 for passenger service.

Other Types

The foregoing description covers only one of the many types of locomotives manufactured by this company.

For moderate speed heavy passenger and freight service the 90 to 110 ton class of electric locomotive is designed. Bulletin 4870.

For interurban roads requiring heavy service with trains weighing from 300 to 500 tons, the G-E Standard 50-ton electric locomotive is adapted. Bulletin 4852.

The 22 to 35 ton types of General Electric locomotives are suited for switching service in industrial plants and interurban railway terminals. Bulletin 4867.

For industrial, mine and construction service the General Electric Company builds electric locomotives ranging from 2 to 25 tons. The industrial service type is admirably adapted for moving material from one building to another, for switching standard cars, equally well adapted for work in brick yards, stone quarries, cement plants, etc. Bulletin 4936.

In getting ore and coal from mines the mine type of electric locomtive is designed. This class of locomotive ranges from 2 to 25 tons. Bulletin 4990A.

A special type of storage battery locomotive is built which is used in industrial plants, foundries and factories where haulages are short and conditions render the operation of the trolley or third rail type of locomotive inexpedient. Bulletin A-4131.

The Gas Electric Locomotive is used for switching in steam road and industrial service. The Gas Electric Motor is a self propelled equipment used for branch line passenger service. Information on request.

The General Electric Company maintains a separate engineering organization for electric locomotives and parties interested should communicate with our nearest office.

Shop Equipment—Electrical

Power Equipment

The General Electric Company manufactures Curtis Steam Turbines in sizes ranging from 7 to 50,000 kilowatts, which are admirably adapted for installation in electric generating stations, and for supplying light and power to office buildings, shops, mills, industrial plants, etc. Their operation is characterized by a minimum of vibration and noise; they are very compact, requiring minimum floor space, headroom and attention. The exhaust steam is free from oil, and may be used for heating.

These turbines can be furnished for either condensing or non-condensing systems, high or low and mixed pressures or superheated steam. The line of small Curtis Turbines consists of 7, 10, 15, 25, 35, 75, 100 and 300 kilowatt direct current and 100, 200 and 300 kilowatt alternating current sets. Full description of the principle, construction and representative installations will be furnished on request for bulletins numbered 42010, 42201, 4883 and 4705-E.

Steam Engine Generating Sets are made for small plants, and for lighting construction operations in isolated places, requiring 100 kilowatts or less. These sets are designed to meet the severe conditions of marine work, which demand light, compact and durable sets of close regulation and quiet operation. They are used extensively for both power and lighting service.

For isolated places requiring power and lighting service the General Electric Company makes an Internal Combustion Engine Generating Set built in units of 5, 10 and 25 kilowatt capacity. These engines are designed to use commercial motor gasoline as fuel and they can be operated on natural gas, of 1100 B.T.U. These units consist of an efficient electric generator direct-connected to a high-grade gasoline engine; both designed and built by this Company for operation together, thereby giving complete units necessarily superior to the usual type of belted or assembled combinations.

The standard voltage of these sets is 125 volts direct current, but any other standard commercial voltage can be supplied. Alternating current units can be furnished in 10 and 25 kilowatt sizes. Bulletins number 4707, covering this type of generating sets in detail, will be sent upon request.

The General Electric Company manufactures belt driven direct current generators in capacity from a fraction of a horse-power to 300 kilowatt unit, in standard voltages. Alternating generators are designed for various frequencies, voltages and phases from 7½ to 550 kilowatts.

Motors and Control

A few of the motor equipments used in railway shops are listed below. Bulletins indicated will be furnished on request.

Single Phase Motors—Constant speed RI motors are suitable for operating all machines demanding acceleration under full or overload torque, such as air compressors, refrigerating machines, pumps, etc. Varying speed RI motors are designed for machinery whose operation demands certain speed regulation against approximately constant torque. Single Phase Induction Motors are described in Bulletin 41507. Control for same—bulletin on request.

Form K Polyphase Induction Motors—Form K is a polyphase induction motor having a skeleton frame.

High speed form K induction motors ranging from ¾ horse-power, 3600 RPM, to 3000 horse-power, 1800 RPM for direct connection can be furnished. These are especially adapted for pump service.

Form K Multi-Speed Induction Motor is for 60-cycle, 3 phase service only. Standard low voltages can be furnished to 12 horse-power at 4 constant speeds, 1800, 1200, 900, 600 RPM. Constant horse-power motors are suitable for machine tools, etc., and constant torque motors for operating fans, blowers, printing presses, etc.

Polyphase Induction Motors Bulletin 41302. Control for same—leaflets Y-711, 68304 and Bulletins 48302-a, and 48405.

RC Type Motors—RC type of motor with commutating poles may be classed as the universal direct current motor. It is especially designed to meet the majority of conditions required of motors.

Direct Current Motors Bulletin 41013. Control for same Bulletin 48303.

RLC Adjustable Speed Motors—RLC adjustable speeds commutating pole motors have been designed for machine tool and similar service where wide spread variation and adjustment of speed independent of load is required.

Adjustable Speed Motors, Bulletin A-4130. Information on Control on request.

Many special equipments are built to fit special machine operations. The reversing planer drive and the car wheel lathe drive are two examples of special interest to railway men. Complete information will be furnished on request.

Portable Air Compressors

The small G. E. Reciprocating Compressors, such as are used to supply air brakes on electric street cars, are particularly applicable for blowing out machinery in industrial plants. These compressors are built with either induction motors or direct current motors of any commercial frequency or voltage.

They are furnished either as portable sets or as stationary equipments complete with automatic pressure governor, reservoir, line switch and fuses and pressure gauge.

Arc Welding Apparatus

A valuable adjunct to the equipment of foundries, railroad shops and repair shops. Can be used for joining and building up metals, repairing old machines or altering new ones. The G-E arc welding apparatus accomplishes this class of work economically and quickly. Made in two types, the portable in 200, 300 and 400 ampere sizes, and the stationary type, of 200 amperes and up. Bulletin 48905.

Sales Organization

Sales offices of the General Electric Company are located in the following cities: Atlanta, Ga., Baltimore, Md., Birmingham, Ala., Boston, Mass., Buffalo, N. Y., Butte, Mont., Charleston, W. Va., Charlotte, N. C., Chattanooga, Tenn., Chicago, Ill., Cincinnati, Ohio, Cleveland, Ohio, Columbus, Ohio, Dayton, Ohio, Denver, Colo., Detroit, Mich., Elmira, N. Y., Erie, Pa., Fort Wayne, Ind., Fort Wayne Electric Works; Hartford, Conn., Indianapolis, Ind., Jacksonville, Fla., Joplin, Mo., Kansas City, Mo., Knoxville, Tenn., Los Angeles, Cal., Louisville, Ky., Memphis, Tenn., Milwaukee, Wis., Minneapolis, Minn., Nashville, Tenn., New Haven, Conn., New Orleans, La., New York, N. Y., 30 Church Street; Niagara Falls, N. Y., Omaha, Neb., Philadelphia, Pa., Pittsburgh, Pa., Portland, Ore., Providence, R. I., Richmond, Va., Rochester, N. Y., Salt Lake City, Utah, San Francisco, Cal., Schenectady, N. Y., Seattle, Wash., Spokane, Wash., Springfield, Mass., St. Louis, Mo., Syracuse, N. Y., Toledo, Ohio, Washington, D. C., Youngstown, Ohio.

For Texas, Oklahoma and Arizona business refer to Southwest General Electric Company (formerly Hobson Electric Co.): Dallas, Tex., 1701 North Market street; Houston, Tex., Third and Washington streets; El Paso, Tex., 500 San Francisco street; Oklahoma City, Okla., Insurance Building.

For all Canadian business refer to Canadian General Electric Co., Ltd., Toronto, Ont.

Foreign Offices: Argentina: Buenos Aires; Australasia: Adelaide, Auckland, Brisbane, Dunedin, Melbourne, Perth, Sydney; Brazil: Rio de Janeiro, Sao Paulo; Chili: Iquique, Santiago, Valparaiso; China: Canton, Hongkong, Pekin, Shanghai; Colombia: Barranquilla; Costa Rica: San Jose; Cuba: Havana; England: London; India: Calcutta; Japan: Moji, Osaka, Tokyo, Yokohama; Korea: Seoul; Manchuria: Dairen; Mexico: Mexico City, Guadalajara; Peru: Lima; Philippine Islands: Manila; Porto Rico: San Juan; South Africa: Capetown, Johannesburg.

Security Sectional Arches

Types

There are three distinct types of brick arches for locomotive fireboxes. The first and oldest is the stud supported type, which is rapidly giving way to the second or tube supported type, and is now used only in certain narrow and medium width fireboxes, where the use of arch tubes is not considered practicable. In the second type the arch brick is supported by arch tubes running from the throat sheet to the back sheet of the firebox. In the third type the arch tubes are installed in the same manner as in the second type; the arch proper, however, does not go forward to the throat sheet, but is supported a short distance back by a refractory wall, forming a combustion chamber between the refractory wall and the flue sheet.

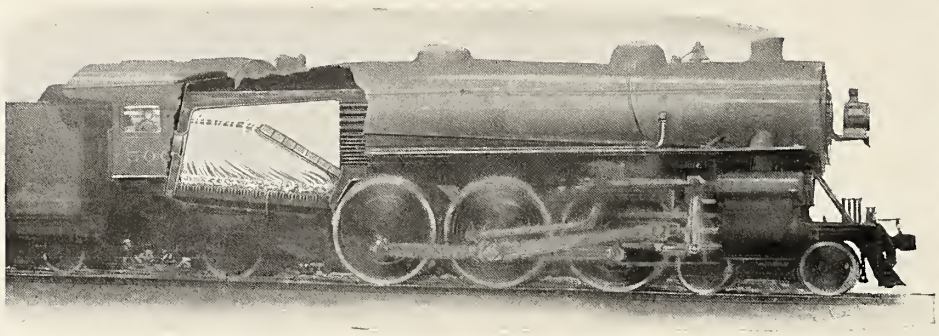

Description

The stud supported type consists of two rows of brick resting on lugs secured to the side sheets, the inner ends resting against each other, and forming an arch practically self-supporting. The disadvantage of this type of arch is that in removing it for inspection of staybolts the whole arch must be removed and practically all of the brick is broken; this is also true if flue work is necessary. For this reason its use is not recommended where it is possible to install arch tubes.

The tube supported type is made in two designs. In one the arch bricks are supported on two or more arch tubes, depending on the width of the firebox, the maximum distance between the tubes being limited to 18 inches. This type is the best for use in the ordinary firebox when conditions will permit. In the other design, the arch bricks between the tubes are applied in two rows arched together at the inner ends. This design is used in cases of restricted depth of throat sheet to obtain practicable firing clearance.

In both designs the side bricks are supported by the tube on one end and the side sheets on the other. The end of the brick resting on the side sheet is of sled-runner shape and the brick forms an angle of about 60 degrees with the side sheet.

The third type of brick arch can seldom be satisfactorily applied to existing locomotive boilers, but in fireboxes specially designed to receive it the results are very satisfactory. It is known as the Gaines Locomotive Furnace and is a combination of the Gaines Combustion Chamber and the Security Arch. The Gaines Combustion Chamber consists essentially of a fire brick bridge wall across the firebox, forming a combustion chamber between the wall and flue sheet, the tubes being shortened and the firebox lengthened sufficiently to admit this application, while the grate area remains normal. The bridge wall is carried on a casting extending across the firebox and secured to the mud-ring at each side. This casting also supports the grate frames and the metal upright stays which prevent the wall from toppling. The floor of the combustion chamber is made of cast or wrought iron plates, protected with fire brick to prevent burning out, and, in order to care for cinder accumulation in the combustion space, a spark hopper is provided in the center, the floor being given a sufficient pitch to cause all accumulation to drop out when the hopper is opened.

The bridge wall is built up of special fire brick of such size as can be easily handled; in these bricks air passages are cored matching the openings in the carrier casting. The size and number of the air ducts vary according to the factors which determine the amount of air needed above the fuel bed.

The Security Arch used with this construction is supported on arch tubes, the number depending on the width of the firebox. These tubes extend between the firebox door sheet and the throat sheet or combustion chamber, and pass through the top brick of the bridge wall at such a height as to support the adjacent arch brick even with the top of the bridge wall; otherwise the construction is identical with the second type previously described.

The steel arch tubes for all types of arches should be not less than 3 inches outside diameter. For lengths

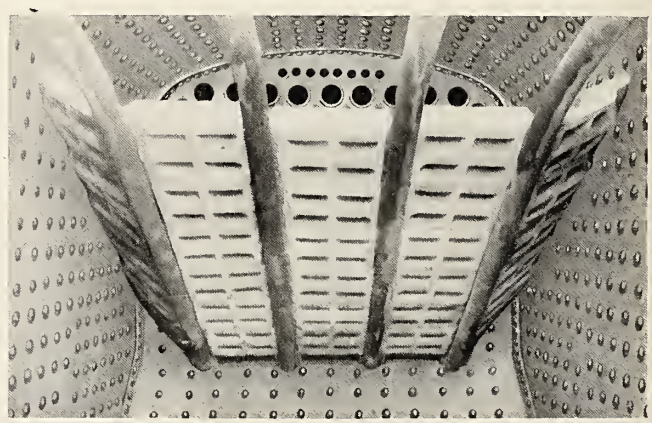

above eleven feet, 3½-inch tubes are recommended. The length of the tube must be such as to allow ⅜-inch to ½-inch to extend into the water space for liberal belling or beading over to hold the tube in place.

The fire brick is of special quality which has been developed by long experience in its manufacture. It is made in sections convenient for one man to handle and is so shaped as to allow for certain inequalities in the arch tube spacing.

Advantages

The flame travel is greatly increased by use of the brick arch, resulting in a better mixing of the combustible gases and air, thereby securing more complete combustion. This results in a saving in fuel for equal rates of work, or an increase in capacity for the same amount of coal, the possible increase in capacity being above 10 per cent.

Security Sectional Arches

The whole firebox heating surface is made effective as the flames are directed to the back head of the boiler and the crown sheet.

Cold blasts of air are prevented from striking the flues, either from a hole in the fire or when the fire door is opened. This eliminates shrinkage strains on the flues, resulting in reduced cost for repairing leaks from this cause.

The brick arch reduces by about 33 per cent. the quantity of black smoke emitted by the locomotive. This is due to more perfect combustion of the fuel, resulting in a decrease of free carbon in the gases leaving the smokestack.

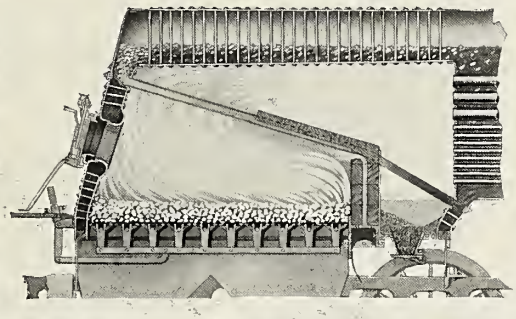

These advantages are obtained by all types of brick arches; the use of arch tubes and sectional arch brick, however, has certain advantages not found in the stud supported type. The arch tubes provide a larger firebox heating surface and produce better circulation of the water.

The brick units are of proper size for safe and easy handling.

Portions cannot break off and fall into the fire.

No skill is required to install, and any portion may be removed without disturbing the whole.

Locomotive Furnace

The Gaines Locomotive Furnace possesses all the advantages of the other two types of arches and in addition has advantageous features not found in any other type of furnace design.

The secondary air supply through the cored openings in the bridge wall furnishes heated air to mix with the combustible gases, materially increasing the completeness of combustion and also increasing its rapidity.

It is often impossible to apply arch tubes to fireboxes with shallow throat sheets on account of the lack of firing clearance and the impossibility of keeping the lower flues free from slag and cinders, which pass over the arch. The bridge wall does away with these objections as it raises the arch and permits easy emptying of any accumulation of cinders which pass over the bridge wall into the hopper.

This construction is especially adapted to overfeed stoker firing, as it provides a flash wall to fire against with an arch to baffle and hold fine particles of coal in the firebox until they are consumed, thereby reducing smoke and cinders and keeping the flues free from all accumulation.

In locomotives having the barrel combustion chamber, the dead water space beneath the barrel can be overcome by applying the arch tubes so as to circulate the water from this point through the arch tubes.

Locomotive builders, in trying to keep the center line of the boiler down are forced to bring the firebox close to the top of the frames and trailer wheels; this results in shallow ash pans, complicated wheel housings and insufficient air openings.

The Gaines Locomotive Furnace, by its method of construction, does away with these bad features. It permits the grates to be raised on a line with the belly of the boiler, the mud-ring being carried forward above the driving wheels and cradled in the center, the throat sheet depth being reduced to a minimum. This permits the boiler to be carried low on the frames without impairing the ash pan.

Maintenance

The cost of application and maintenance of the brick arch, compared with its advantages, shows a substantial saving resulting from its use.

A very comprehensive file of carefully kept monthly records of arch brick consumption on a hundred of the leading railroads shows that the cost of maintaining arches and arch tubes averages less than two dollars per thousand engine miles for hand-fired locomotives.

The average saving in the coal bill is about ten dollars per thousand engine miles. Thus it will be seen that for an expenditure of two dollars there is a net return of eight dollars or 400 per cent.

On stoker-fired locomotives the arch brick consumption is materially higher. This is largely accounted for by the fact that the stoker-fired locomotive consumes coal at a much higher rate; that is, the coal consumption per thousand engine miles is perhaps double what it is in the average hand-fired locomotive. This is because the stoker-fired locomotive is extremely large and is operated under extremely heavy duty conditions.

However, an expenditure of four or even five dollars per thousand stoker locomotive miles for the maintaining of the arch yields as large or even larger a return than does the two dollar expenditure in the case of the hand-fired locomotive.

Organization for Service

The fundamental principle underlying the whole organization of the American Arch Company is *Service First*. Its traveling engineers are men of broad mechanical experience; so located geographically that they are in position to give immediate personal attention and advice on any difficulty which may arise in connection with the application or maintenance of the arch.

Throughout, this organization is composed of men who have had thorough practical experience in the various branches of the Motive Power Department. They come from railroads in the different parts of the country, covering in their experience in operation, practically the whole United States.

Another important feature is the co-operation of this organization not only with the builders of the locomotive, but with the designers and manufacturers of such special appliances as the Stoker and the Superheater and the various devices for the promotion of fuel economy. This makes it possible to secure the harmony of design of all the correlated parts necessary for successful operation of the locomotive as a whole.

The traveling engineers are under the direction of the Manager of the Service Department; engineering and designing under the supervision of the Vice-President in charge of Engineering, manufacturing under the direction of the Vice-President in charge of Production, and the Sales Department under the Vice-President in charge of Sales.

In selecting all the men in these different groups to form the most competent organization it was possible to get together, there was one object constantly in view —to follow up salesmanship with first-class service.

Locomotive Superheater

Saturated Steam

Saturated steam has the same temperature and pressure as the water from which it was evaporated and with which it is in contact. It has a definite volume and temperature for each pressure. When heat is taken from saturated steam, by cooling in the cylinders and steam passages, a considerable part of the steam condenses. The amount of this is almost in proportion to the heat abstracted, and is inert so far as capacity for work is concerned.

If, however, heat is added to the steam after it leaves the boiler, it becomes superheated steam, and its temperature and volume are increased, although the pressure remains the same.

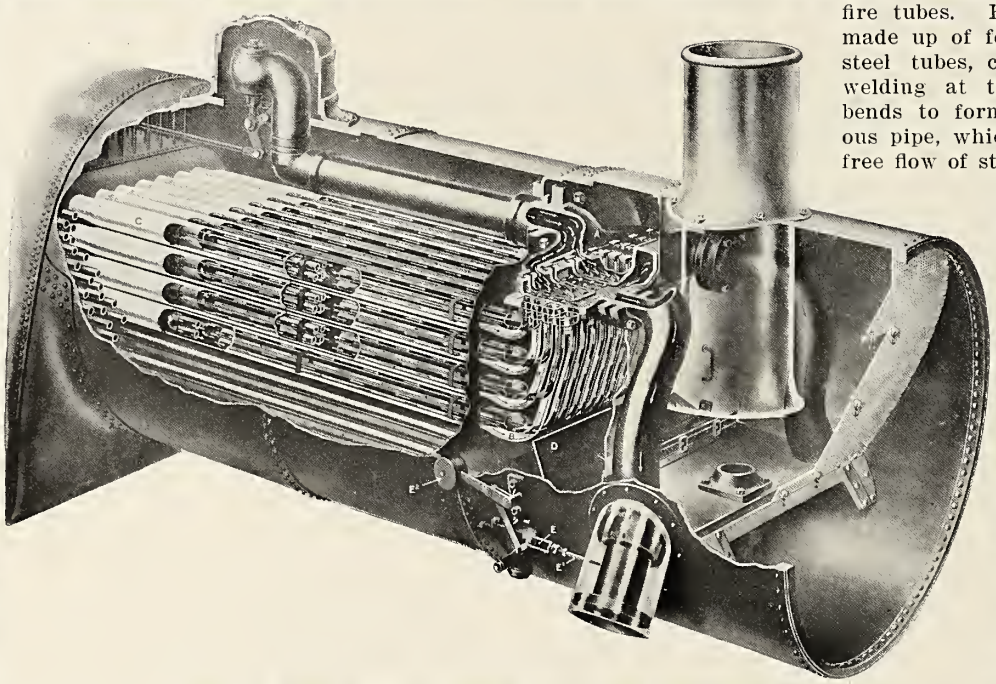

Fig. 1. Type "A" Top Header Fire Tube Superheater.

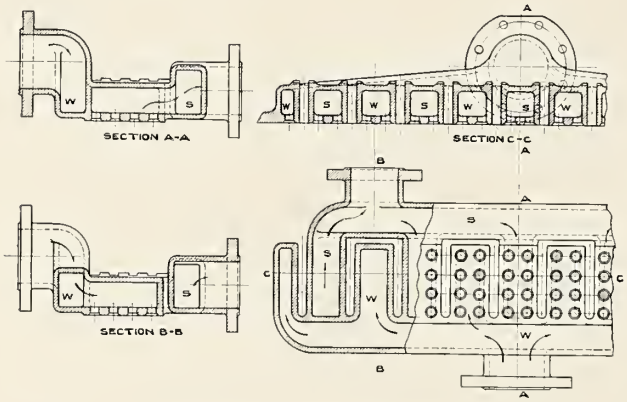

Fig. 2. Type "A" Header.

Superheated Steam

Superheated steam has the properties of a perfect gas. It is a poor conductor of heat and when cooled in the cylinders its superheat is reduced, but condensation does not take place until all the superheat has been absorbed.

The Superheater

Our Type "A" fire tube superheater adds a high degree of superheat to the steam, after it has left the boiler, and before it reaches the cylinders.

The superheater includes a top header, a number of superheater units and a damper.

The header as shown in Fig. 2 takes the place of the ordinary tee head, at the front end of the dry pipe, and is divided by interior walls into two compartments. The saturated compartment takes the steam from the dry pipe and allows it to flow through the superheater units, while the other receives the superheated steam after it returns from the units on its way to the cylinders.

The superheater units connect with the header and extend back almost to the firebox, through large 5½-in. fire tubes. Each unit is made up of four seamless steel tubes, connected by welding at the return bends to form a continuous pipe, which permits a free flow of steam through the unit and offers the least obstruction to the flow of gases through the flue.

The ends of the unit are connected to the saturated and superheated compartments of the header by means of steam tight ball joints, held in place by single bolt clamps. In order to prevent the hot gases from burning the superheater units when they are not using steam, the front ends of the large boiler tubes are separated from the rest of the smokebox by vertical and horizontal partitions. The horizontal plate contains a damper to allow the gases to pass through the large flues only when the engine is working. This damper is automatically operated by a steam cylinder, which is in direct connection with the steam chest or steam pipe.

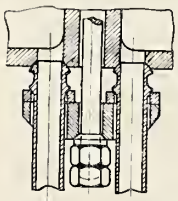

Fig. 3. Detail Superheater Pipe Joint, Through Bolt Connection.

Operation

The methods to be followed in operating superheater locomotives are very similar to the approved practice of running and firing saturated engines.

The superheater locomotive should be worked with full throttle and a long cut-off when conditions will permit. As the demand for power decreases, the cut-off should be shortened until about 25 per cent is reached, further decrease in power to be taken care of by reducing the throttle opening.

The water level should be kept below the third gage cock, to prevent priming, as the superheater is a device for heating steam and not an auxiliary boiler.

The oil for lubrication should be of a high flash point and the supply delivered to the valves, and cylinders must be ample for the purpose. The oil should be fed constantly, as superheated steam is a gas and contains no moisture to help out poor lubrication.

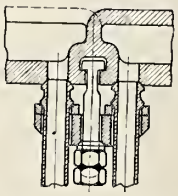

Fig. 4. Detail Superheater Pipe Joint, "T" Bolt Connection.

Locomotive Superheater

It is good practice to keep the throttle cracked when drifting or slowing down for a stop, to prevent air and smokebox gases from being pulled into the steam chest and cylinders, which will cause carbonization.

Maintenance

The operation and maintenance of the superheater are closely connected and each depends upon the other. The maintenance is comparatively simple and can usually be taken care of without additional men or expense.

The large fire tubes must be kept clean and the header and unit connections maintained steam tight. Periodical tests should be made to determine that these conditions exist, and repairs should be made when required.

The superheater and all its parts should be maintained as manufactured and installed in locomotives. If this is done, the greatest economy and efficiency in operation will be obtained.

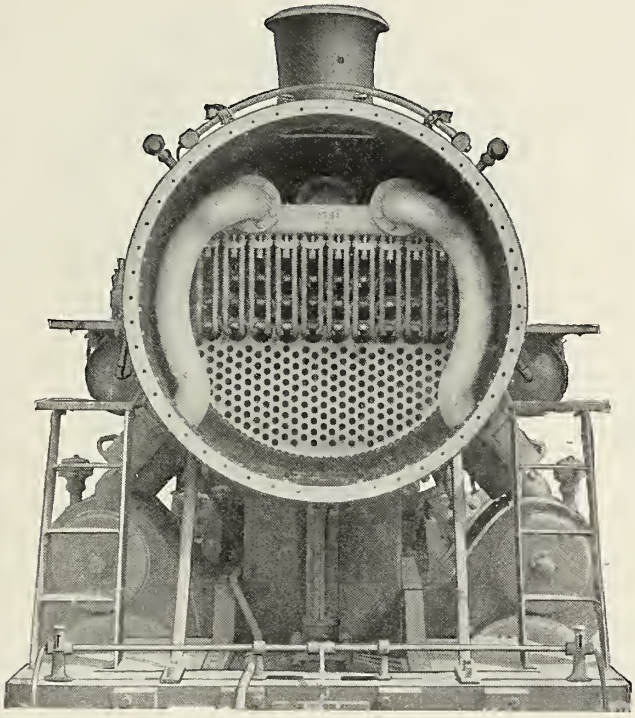

Fig. 5. Type "A" Top Header Fire Tube Superheater Smokebox Arrangement.

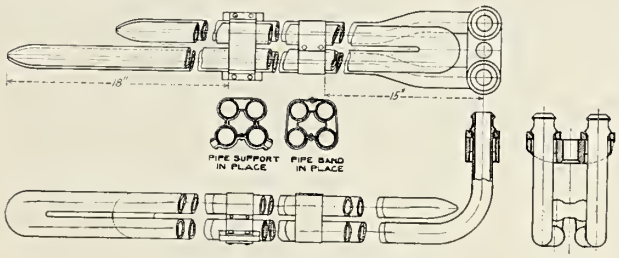

Fig. 6. Superheater Unit.

Economy and Efficiency

Superheated locomotives in the same service are operating on less coal and water than similar saturated engines, or are handling greater tonnage at higher speeds on a given consumption of coal and water. The greater water economy of the engine using superheated steam, which usually amounts to 35 per cent less than that consumed by a similar saturated locomotive, gives the boiler a reserve capacity of almost the same amount, and enables the locomotive to handle much greater tonnage or make greater speed than is possible with engines which are not superheated.

In Passenger Service

In passenger service the superheated locomotive is particularly valuable on account of its greater speed and power, which enable it to make up time with a heavy train almost regardless of weather conditions. Increased boiler capacity allows greater flexibility in increasing train loads, without double-heading.

In Freight Service

In freight service the superheated locomotive will effect an economy of 20 to 25 per cent in coal, and 35 per cent in water, hauling the same tonnage at the same schedule as a similar saturated engine, or, what is probably of greater importance, it will haul a much greater tonnage at the same schedule on less coal and the same amount of water. The ultimate results are increased track capacity, reduced congestion and lower transportation costs, which mean greater profits, with an opportunity for expansion.

In Yard Service

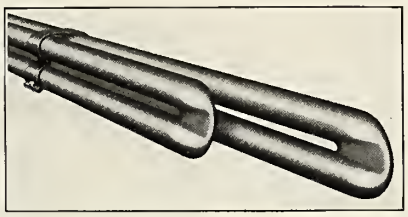

Fig. 7. Superheater Unit, Welded Return Bend.

It has become customary to consider shifting locomotives as necessary evils which must be carried on the non-revenue side of the ledger. Yard engines, on account of the conditions under which they must operate, are by far the most wasteful and inefficient power used by railroads. It is, therefore, only to be expected that the superheater would offer the most effective results in this class of service. The superheated shifting engine not only saves more than 25 per cent of the coal burned and

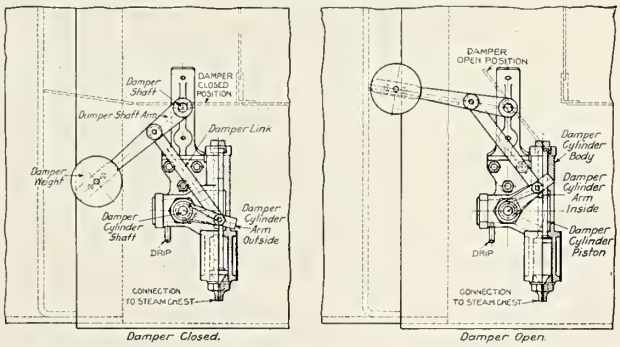

Fig. 8. Superheater Damper and Operating Cylinder.

30 per cent of the water used by a similar saturated locomotive, but is a faster, stronger and much more flexible engine.

This economy in coal and water is a very important saving in itself, but the effects of this economy, which allow these engines to be operated on twenty-four-hour shifts without coming over the ash pit to have the fire cleaned and to work for long periods without stopping

Locomotive Superheater

to take water, are still greater advantages, particularly during periods of congestion.

Adaptability of the Superheater

The Type "A" superheater is efficient, reliable and accessible. It is adaptable to all classes of locomotives, regardless of size, and its application is of particular advantage in modernizing existing locomotives.

We are prepared to submit estimates of the cost of applying superheaters to either new or existing locomotives, as well as the probable economy that will be effected.

Our interest does not stop with the purchase and installation of superheaters, for we maintain a corps of traveling engineers, expert in the use of superheated steam, to assist railroads in getting the maximum economy and efficiency with their superheated locomotives.

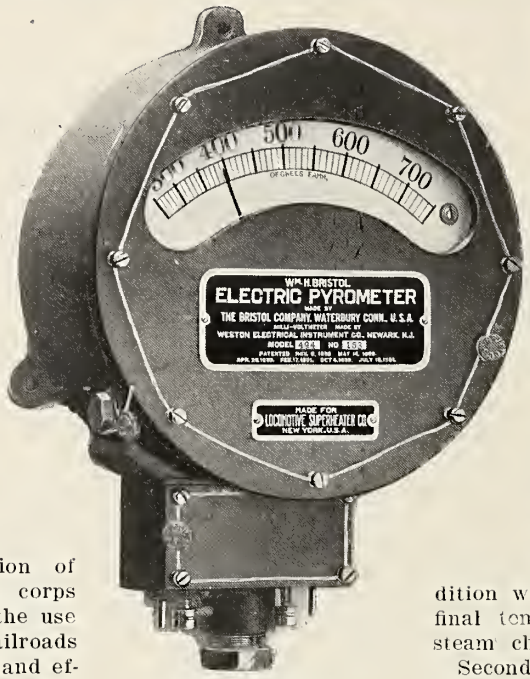

Fig. 9. Electric Pyrometer Indicator.

What It Tells the Engineman

The pyrometer tells the engineman the amount of superheat that is being obtained. When it indicates that the superheat obtained is lower than the working of the engine warrants, the engineman knows that one or more of the following conditions must exist:

First—That the water in the boiler is being carried so high that priming is taking place. The superheater, under this condition, is being used to evaporate the water, and the heat which should be superheating the steam is being used for this purpose, a condition which will result in reducing the final temperature of the steam in the steam chest.

Second—The fire may not be in the proper condition, due to heavy firing, or occurrence of holes in the fire which, in either case results in a reduction of the firebox temperature and consequently the final temperature of the steam.

Third—A portion or all of the superheater flues may be stopped up.

Fourth—There may be leaks in the front end, which interfere with the drafting of the locomotive, preventing the free passage of the gases through the large flues containing the superheater units, thus resulting in a drop in the final temperature of the superheated steam.

Fifth—Failure of the damper to operate properly, which interferes with the circulation of the gases through the flues and results in a reduction of the superheat.

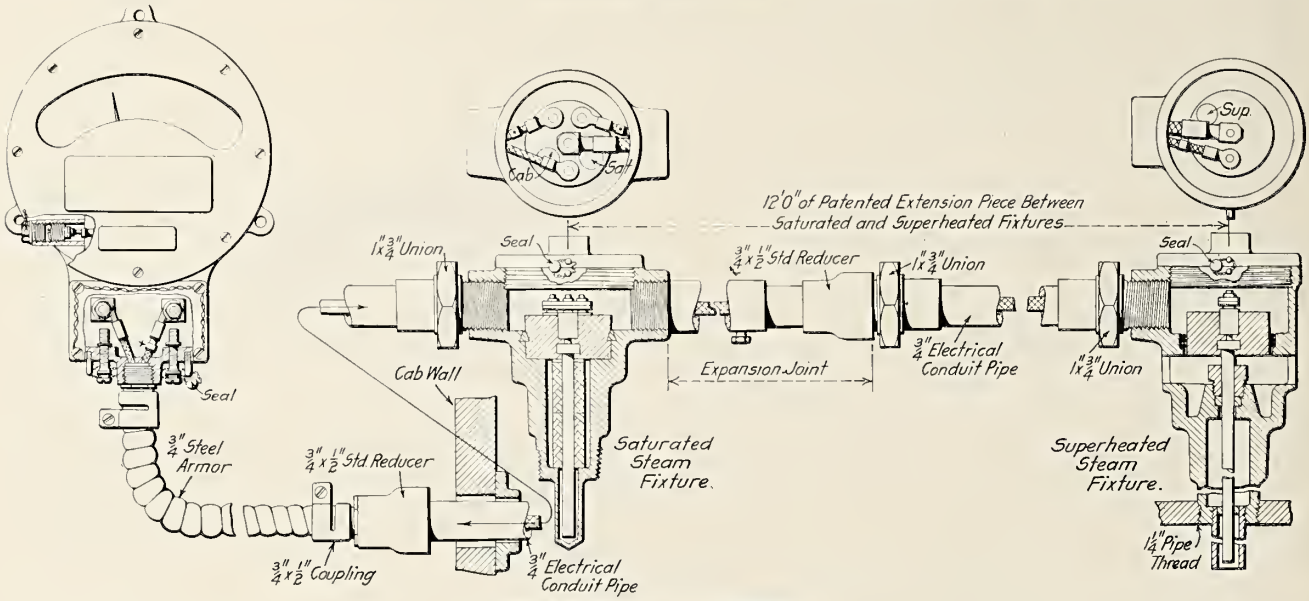

Fig. 10. Electric Pyrometer.

Pyrometer

The permanent installation of our pyrometer on every superheated locomotive is recommended. It enables the engineman to determine the amount of superheat at all times and in this manner know when he is operating his locomotive with the greatest efficiency.

Our pyrometer is of the electrical type, consisting of two thermo couples. The cold end being located in the boiler is in the practically constant temperature of the saturated steam, while the hot end in the steam chest is exposed to superheated steam. The thermo couples are properly protected against damage and are carefully insulated and packed to prevent the leakage of steam around them. The indicator is designed for accuracy and lightness and may be depended upon to register accurately the electro-motive force generated in the thermo couples. It is graduated to read directly from 250 to 750 degrees Fahrenheit.

Application of the Pyrometer

The application of this pyrometer is extremely flexible and it can readily be applied to all new and existing types of superheated locomotives without changes in design.

Universal Sectional Packing Ring

The Universal Packing Ring is made up of a number of sections placed side by side and end to end with the joints staggered so that no steam can leak by. A semi-circular groove is cut in the sections of the ring so that when they are placed together a round hole is formed in which fits a steel spring. This spring holds the sections of the ring together and locks them in place.

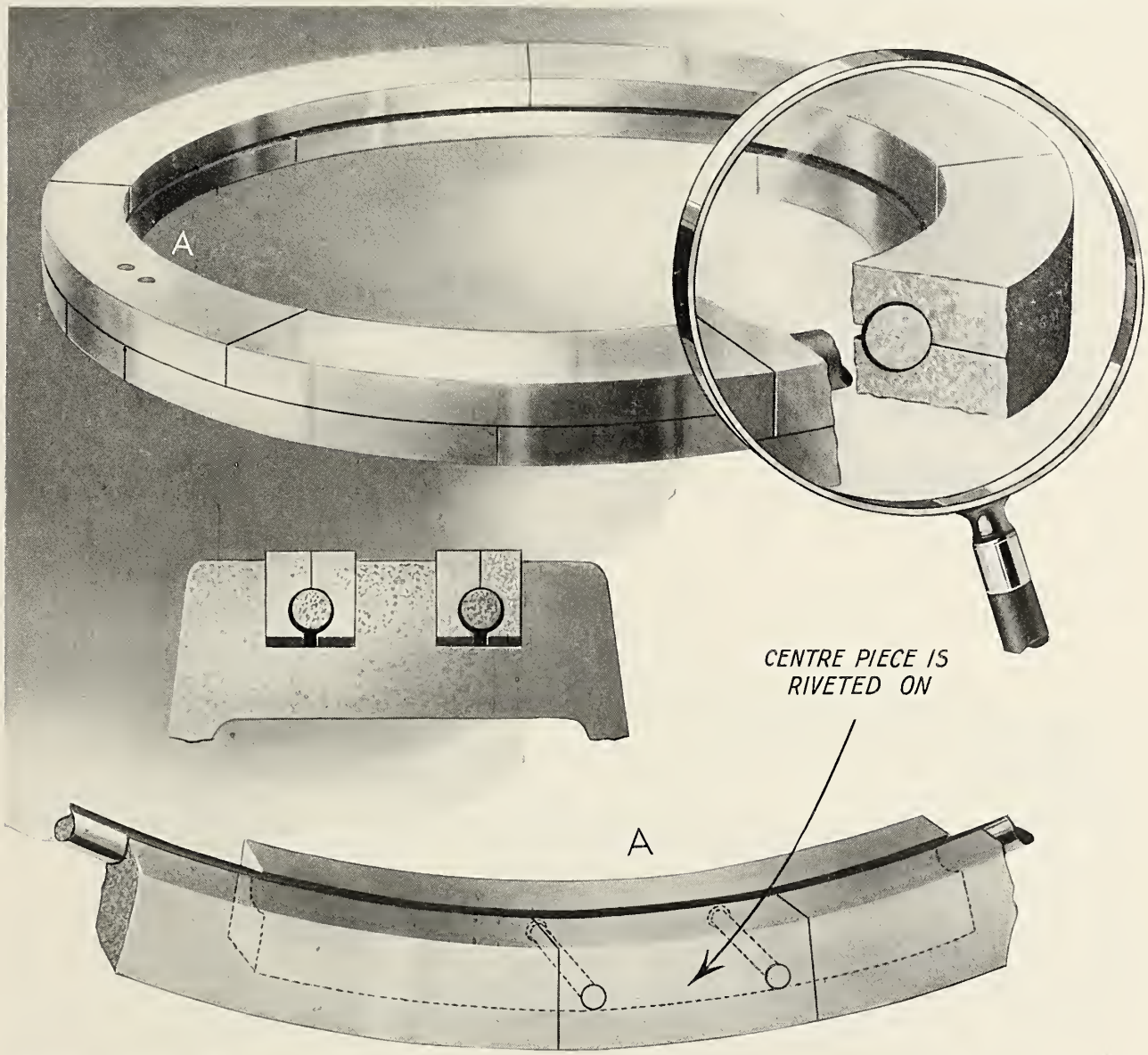

Should a section become broken in service it cannot come out or cause any trouble.

Using an independent steel spring to produce the bearing of the spring against the cylinder, instead of depending upon the spring of the ring itself, makes possible the use of a special gray iron which is very tough and especially adapted to this service. The steel spring is made of an elastic steel which will withstand the high temperature of superheated steam and maintain its resiliency even when the ring becomes considerably worn. The snap ring generally used loses its resiliency from two causes—wear and the effect of high temperature, both of which are obviated in the Universal Sectional Packing Ring.

A snap ring is oval in shape when pressed into the cylinder; the Universal Section Ring adapts itself to the walls of the cylinder even if the cylinder is out of round, thus producing a steam-tight joint under all conditions.

The Universal Sectional Ring wears uniformly from end to end of the cylinder and there is no tendency for the cylinder to wear out of round. The steel spring in the groove exerts just sufficient pressure to give the required bearing. A snap ring 24 in. in diameter by 1 in. square requires approximately 200 lb. spring-tension; the Universal Sectional Ring requires from 25 to 30 lb. An evenly distributed pressure is always exerted on the walls of the cylinder and the lower spring-tension materially reduces friction and wear.

All other sectional rings require to be applied in a certain way; the Universal Ring is applied just the same as any snap ring; the sections are always held in place; the piston head may be removed from the cylinder and the rings will still remain intact in the groove.

The advantages of the sectional ring over the snap ring are to-day generally recognized by engineers. The Universal Sectional Packing Ring is offered as an improvement over any other sectional ring on the market. Full information will be gladly furnished upon request.

The Baker Valve Gear

Description

The Baker Valve Gear is an outside gear having no links or eccentrics. The bearings of all moving parts are pins and bushings, making it easy to repair. The movement of the valve is controlled by the reverse yoke which is pivoted in the gear frame. This reverse yoke carries the radius bar, on the lower end of which is pivoted the gear connection rod. This gear connection rod extends from the radius bar bearing downward to connect with the eccentric rod and upward to connect with the bell crank.

After setting, the valve gear keeps its adjustment permanently. Having no links, eccentrics or sliding blocks, there is no chance for variance as is found in the ordinary link gear.

All parts of the gear are easily accessible, making inspection easy and renewals when necessary after long service, inexpensively and quickly made.

Every moving part is equipped with an integral oil well, thoroughly protected from dust and dirt, insuring positive lubrication.

All bearing points are machined to template in an

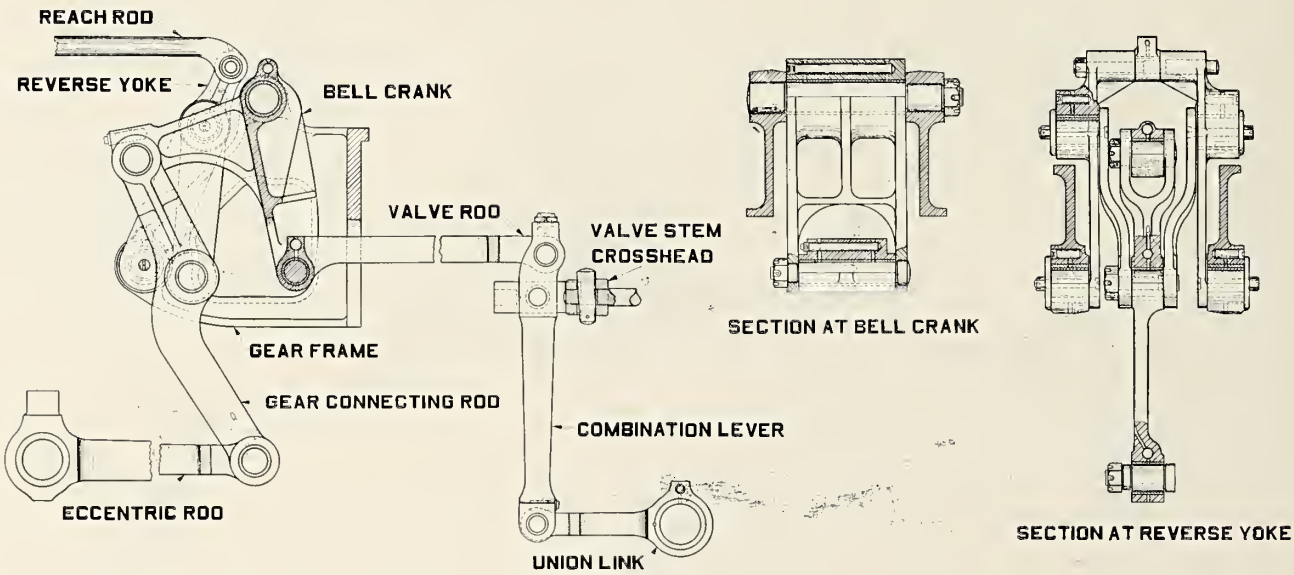

The minimum vertical movement of the gear connecting rod is obtained with the reverse yoke in mid gear, and as the yoke is moved toward either extremity the valve travel is increased through the increased oscillation of the bell crank by means of a greater vertical movement of the three gear connecting rod bearings.

A movement of the lower end of the gear connecting rod to the left with the reverse yoke in forward motion produces a lifting action of the gear connecting rod, which moves the valve back by revolving the bell crank clock-wise. This same movement of the lower end of the gear connecting rod will produce a falling action of the gear connecting rod body with the reverse yoke in the back motion, which reverses the movement of the bell crank and valve. The crosshead connection moves the valve the amount of lap and lead each way. This makes the lead constant and independent of the cut-off.

Application

This valve gear may readily be applied to all modern equipment, either old or new, and to any class of service. There is but one type of gear for piston valve and one for slide valve locomotives. They are applicable and interchangeable for all classes of locomotives.

Advantages

The Baker Gear has numerous advantages. Being located outside it relieves the complexity and congestion underneath the engine and permits practical bracing of the locomotive frame.

original frame casting. The points where wear occurs are all bushings and pins, very quickly and easily replaced, bringing the gear into its original alignment and proper relationship with the valve. This is not obtainable with other gears where bearing points are independently attached to the locomotive or where wear or distortion of link or block will disturb the steam distribution.

A more uniform cut-off and release is obtained and therefore greater effective expansion from the steam.

Repair Parts

The quantity of duplicate repair parts necessary to be carried in stock and the capital tied up in this are reduced to the minimum. This is because there are so few parts to the gear, and even these are thoroughly standardized and interchangeable. Several parts will fit either right or left on both inside and outside admission gears, and most of the other parts are interchangeable right and left.

With other gears a large number of parts must be carried in stock and considerable fitting is necessary on many of these before they can be applied to the locomotive.

In making replacement on the Baker Gear all that is necessary is to remove a couple of nuts and pins, slip the stock part in and the engine is again ready for service.

The maintenance costs are extremely light. Easy inspection and thorough lubrication make wear on the moving parts very slight.

The Baker Valve Gear (*Continued*)

Maintenance

When parts become worn after long service all that is necessary is to replace a few pins and bushings. This brings the gear back to its original centers and is a simple job that can be done without dismantling the gear.

Operation

Absolutely constant lead makes the engine smart and capable, keeping it up to its full capacity at all times. Service tests have proved that with this gear a considerable saving in fuel and water can be made, more tonnage can be handled and a higher speed maintained than with other valve gears.

Sentinel Low Water Alarm

Theory of Operation

The operation of the Sentinel Low Water Alarm is based on the thermostatic principle. The expansion of a metal tube when filled with steam opens a valve by means of a bell crank lever and admits either air or steam to the warning whistle.

Description

The device consists of few parts and these are designed for durability and service. A cross-tee "A" is fastened to the shell of the boiler just over the high point of the crown-sheet. An internal drop pipe "B" connects with the cross-tee and extends to a predetermined level inside the boiler. Expansion member "C" connects at one end with the Cross "B," and at the other end with lever "F," by means of Tube Head "D." An Alarm Valve "E" which is of simple construction and has no stuffing boxes is operated by lever "F." This valve is connected with either the air or steam line. The opening of valve "E" operates the warning whistle "G."

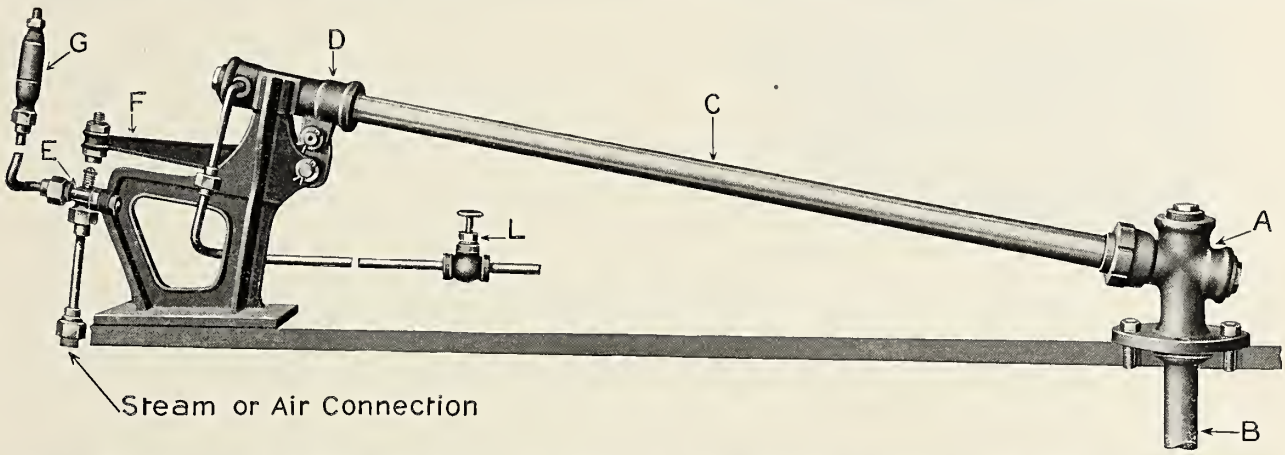

Operation

When the water in the boiler is at its normal level it will seal the bottom of pipe "B" and any steam imprisoned in the tubes will condense and thereby fill these parts with water drawn up from the boiler.

As long as a safe water level is maintained in the boiler, the mechanism will remain inactive. If, however, the water falls below the end of the drop pipe, all the water in the tube above will immediately drop out, due to its weight, thereby admitting live steam to the expansion member "C." The expansion member responding to the change in temperature will open alarm valve "E" by means of lever "F" admitting steam or air to whistle "G," thereby warning the attendant of danger.

As soon as normal water level is restored, the end of drop pipe "B" is again sealed, and any steam imprisoned will condense, drawing water up from the boiler to fill the space. As this water chills, the member "C" will contract, withdrawing lever "F" from valve "E," thereby closing the valve and shutting off the steam or air from the whistle.

If electric current is available it may be used by having the lever "F" make electric contact and sound an alarm bell, dispensing with the valve and whistle.

Testing

In a device of this kind full reliance cannot be placed on it unless it can be tested at frequent intervals. This requirement has been cared for by means of a test pipe. Opening the valve "L," located on the backhead of the boiler, permits the chilled water in the expansion element to be blown out and replaced by hot water from the boiler. This water being the same temperature as the steam, will cause the device to thermostatically operate, thereby demonstrating the condition of the entire mechanism.

Cleaning

The design and size of the parts is such that stoppage of the passageways is almost impossible. Clean-out plugs are provided, however, at each end of the expansion element, and also at the top of the drop pipe so that all passageways may be easily cleaned.

Reliability

Prolonged service tests on locomotives have demonstrated that this device is reliable and dependable. By locating the drop pipe over the high point of the crown sheet and setting it for a predetermined minimum of water, assurance may be had that any stage of water below this will be announced by the warning signal in the cab. The drop pipe is adjusted by warning only when a dangerous low water level occurs.

Chambers Throttle Valve

Features Sought in its Design

The Chambers Throttle Valve is designed to meet the requirements of throttle control in large modern power, especially in *superheated* steam locomotives. It is designed to overcome the difficulties encountered in the increasing unbalanced areas of double-seated throttle valves, and to provide a fully steam-balanced, single-seated valve, which practically eliminates regrinding, thereby insuring a tight throttle; a valve which will take all the steam at the highest point in the dome and in such a manner that it will not syphon water into the dry pipe and superheater units; a valve which need not be removed for internal boiler inspection and which all parts are standardized and interchangeable and readily accessible without removal from the boilers; a valve which has a positive and *flexible drifting feature.*

Description

The Chambers Throttle Valve is composed of six principal parts, which are shown in figure 1—

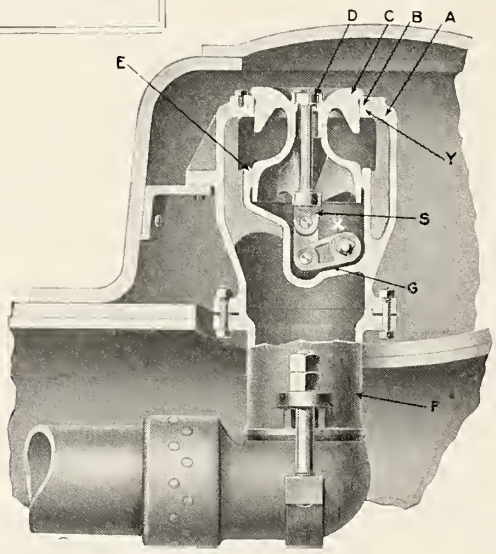

Figure 1

A—Throttle Box
B—Removable Ring Seat
C—Main Valve
D—Balancing-drifting Valve
E—Balancing Piston
F—Distance Piece

In the Throttle Box A, there is a Chamber X, which for convenience is called Balancing Chamber, in which the Balancing Piston operates. The Ring Seat B, when removed, allows the Balancing Piston E, which has the same area as the Main Valve, to be inserted in the Balancing Chamber. The Ring Seat B, is then inserted, making a joint on the face Y. The Main Valve C, is then inserted seating on Ring B. The Balancing-drifting Valve D is then secured to the Valve Stem in such a manner that it is steam tight and at accurate distance and seats on Main Valve C.

The Valve is operated by means of a rod, rotary in motion, connecting with Crank G, in Balancing Chamber X. It will be noted that when the Balancing-drifting Valve and Main Valve are in the closed position there is a space "S" between the lower Shoulder on the Valve Stem and lower face of the Boss on the Balancing Piston; this for the purpose of allowing the Balancing-drifting Valve to lift the height of this space before the Main Valve leaves its seat.

Figure 2 shows a plan of the Dome and Section of the Stuffing Box and Head at a point where the Operating Rod is connected with the Inside Crank G. H is a single piece Operating Rod connecting Inside Crank G with Outside Crank J. K is a heavy Covering Pipe connecting Throttle Box with Stuffing Box. L-1 is a separable Ball Joint with ground face. L-2 is a Nut with ground faces which secures the Covering Pipe. L-3 is the Stuffing Box proper. L-4 is a gland containing a removable one-piece Metallic Packing L-6. L-5 is a Shoulder on the Operating Rod which forms a steam joint with the Packing L-6. L-7 is a Spring for the purpose of keeping the Operating Rod in place when there is no steam pressure exerted. Note that the end of the Operating Rod H is square and is a sliding fit in the Crank G, which allows for adjustment, expansion and removal.

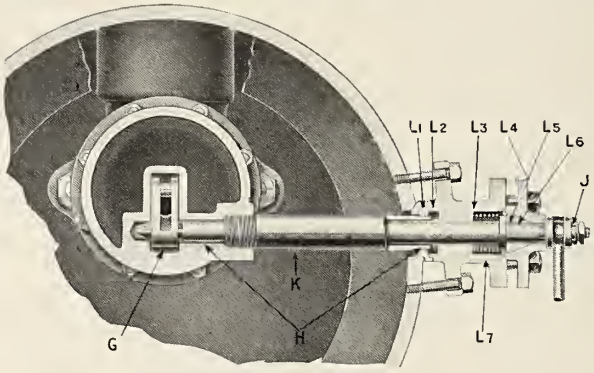

Figure 2

Figure 3 is a Differential Fulcrum Operating Lever so designed as to give the greatest leverage (approximately 16 to 1) and the greatest travel at the inception of the movement, quickly decreasing travel at the finish of the movement. An Indicating or Drifting Notch is so placed on the top of the Quadrant that when the Throttle Connecting Rod is properly adjusted it will engage a Latch

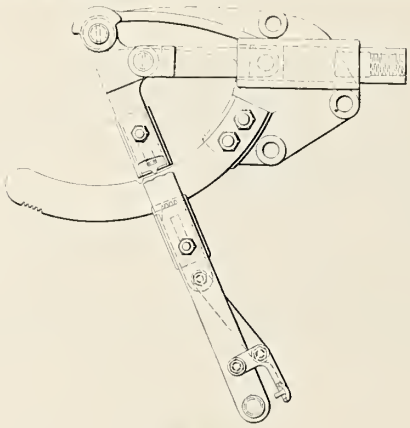

Figure 3

which shows the operator that the Main Valve is closed and the Balancing-drifting Valve is open to its maximum capacity. Graduation of the Drifting Valve is accomplished by further forward movement of the Lever.

Operation

The first movement of the Throttle Lever from the closed position rotates the Operating Shaft with a corresponding upward movement of the Inside Crank, and an upward movement of the Valve Stem which lifts the Balancing-drifting Valve. The steam enters the Balancing Chamber and fully balances the Main Valve. The Balancing-drifting Valve having an unbalanced area of only 2¼ square inches, a very slight pull on the Throttle Lever is required to open it. Continuing the movement the Shoulder on the Valve Stem engages the Boss on the underside of the Balancing Piston, which raises and in turn lifts the Main Valve. In closing the Main Valve seats before the Balancing-drifting Valve. The steam used in drifting is that which leaves the Balancing Chamber and passes between the Balancing Piston and the adjacent wall, thence to the superheater and cylinders.

See page 284; illustrated section, figures 298 to 302.

Schroeder Incandescent Electric Headlights

Sunbeam Headlight

The Schroeder Sunbeam headlight is made for either a 6-volt or a 32-volt system. It has a heavy 12-inch mirror glass reflector slightly colored to make the light more penetrating. This never needs replating and does not tarnish. The lamp socket is adjustable, permitting the use and accurate focusing of any size incandescent round bulb or concentrated filament nitrogen lamp up to 250 watts.

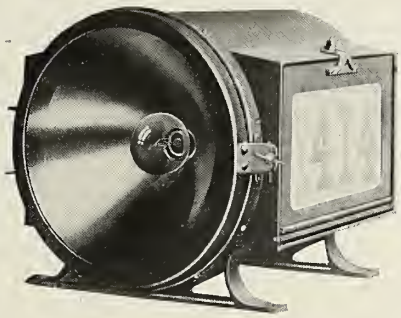

The distance at which objects can be discerned varies from 800 feet to 2,000 feet, depending on the type of lamp used.

The headlight case is substantially constructed of metal; the doors are swung on heavy hinges and secured, when closed, by thumb screws, making it dust proof tight. It is supported by heavy iron brackets riveted to the body of the headlight and bolted to the support on the locomotive.

Headlights with other types of reflector can be furnished in any special size and design having any size or type of number plate. Adjustable stands for incandescent bulbs are made for use in old type headlight cases, having large or small reflectors. These stands are adjustable to permit of properly focussing the bulb.

Advantages

Incandescent electric headlights fully comply with all the requirements of the Interstate Commerce Commission. The use of the special mirror reflector increases the fog penetrating qualities of the light and at the same time eliminates the blinding glare that renders observation of signals difficult.

The equipment is light in weight, easily applied, and low in operating and maintenance cost.

Electric lights are also used in the cab, enabling the enginemen to determine more closely and easily the readings of the various gages. The marker lights can be wired for electric lights if desired.

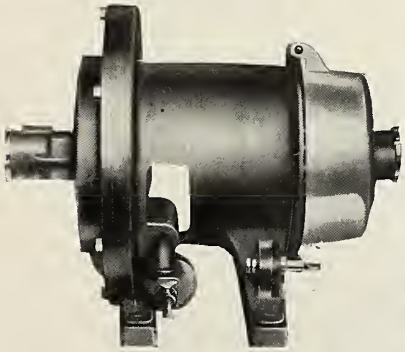

Turbo-Generators

Two types of turbo-generators are manufactured for use with the incandescent locomotive headlights; they operate at 6 volts and 32 volts, respectively.

The motive power in each case is a steam turbine using steam at boiler pressure. They will operate at any pressure from 75 lbs. up. Both types give reliable and efficient headlight service, being economical in steam consumption and providing a steady brilliant light.

Six-Volt System

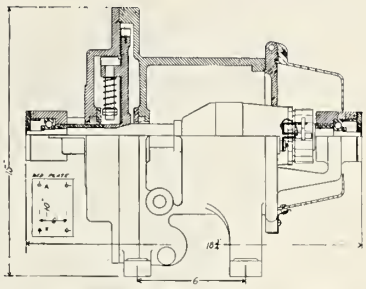

The six-volt turbo-generator system for electric headlights is the latest development. It has a capacity of 150 watts at 2,400 r.p.m. The weight is 120 lbs., and the over-all dimensions, 14 in. by 19 in. by 15 in. high.

The frame for both the turbine and generator is cast integral, and the shaft for the armature and turbine wheel is also made in one piece. Ball bearings are provided at either end of the shaft and Graphalloy packing is used to maintain steam tight joints at the turbine ends. Lubrication is cared for by large grease cavities around the ball bearings.

The machine is built either with or without the throttling governor (see 32-volt system for description). When used without the governor speed is kept practically constant by means of a reducing valve supplemented by a patented friction device which prevents excessive speed.

The turbo-generator is simple in design and operation and easily accessible for inspection and repairs. The revolving parts have ball bearings and are thoroughly lubricated. The commutator is heavy and will permit several turnings before renewal is necessary. Grease is prevented from leaking out of the bearings by bushings having spiral oil grooves cut in them, which tend to return the lubricant to the bearings. This effects economy in lubrication and also prevents grease getting on the generator windings.

32-Volt System

The 32-volt outfit weighs 175 lbs., and is 13 in. high, 24 in. long, and 12 in. wide.

The body of the generator and the turbine is cast in one piece, insuring strength, rigidity and bearing alignment. Both the turbine wheel and the armature are fastened to the same shaft, which rotates on two sets of ball bearings.

The generator has a capacity of 350 watts, and operates at a speed of 2,200 r.p.m. The commutator is made extra heavy, and will permit of several machinings before renewal is necessary. The armature can be removed quickly; the outside bearing housing is readily removed by taking out three cap screws and one retaining nut.

Steam from the boiler is admitted to the turbine through a governor valve that is automatically controlled by a centrifugal governor on the end of the turbine shaft, which, by regulating the valve opening, maintains constant turbine speed.

In designing this turbo-generator care was taken to keep all parts easily accessible for inspection or repairs, and to provide large bearings with exceptional lubrication. A detachable outer shell at either end provides almost instant access to the governor on one end and the armature on the other. Further removal of a cast

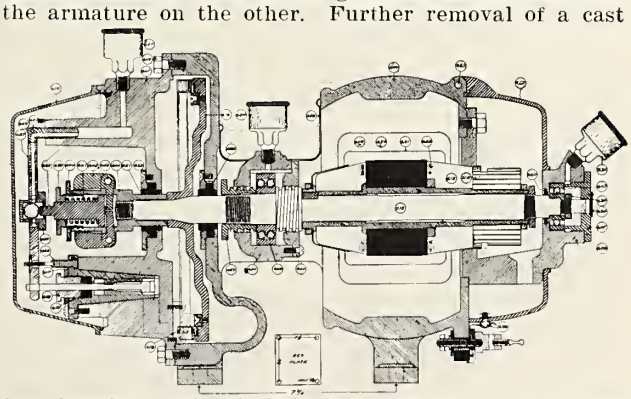

iron housing, which is held by set screws, gives access to the turbine wheel or armature. Lubrication is provided for by grease cups and large grease wells which surround the ball bearings, making daily attention unnecessary.

Locomotive Electric Headlight Equipment

Type "E" Equipment

The main turbine casing is cast in one piece and is extended on the generator end so as to provide a concentric connection for the rear field frame, which is attached and held firmly in place by two cap screws.

The shaft is carried on a ball-bearing in the generator end and a bronze sleeve-bearing on the turbine end, the latter being provided with a ring oiler and an automatic overflow so that the condensation is automatically drained from the oil.

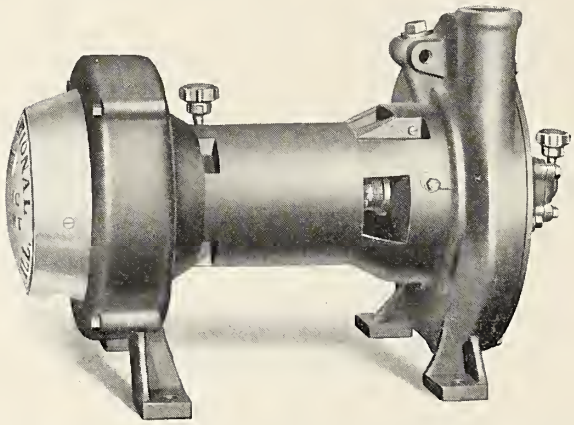

The ball-bearing on the generator end is so arranged that in case of oil working out of the bearing it cannot injure the generator windings.

The buckets in the turbine wheel are securely dovetailed in the periphery of the rotor and securely welded together by the oxy-acetylene process.

Steam is delivered to the turbine by a ½-in. pipe, and is directed through the turbine buckets by a three-stage expanding nozzle.

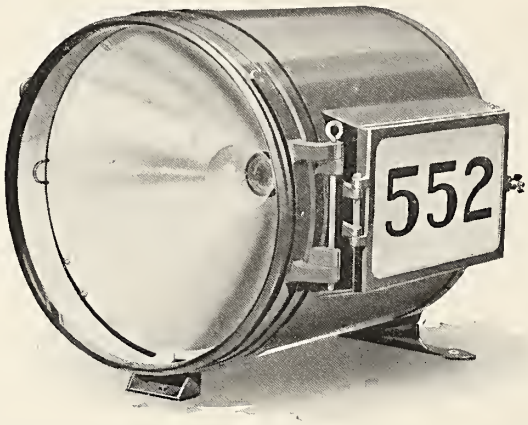

The equipment is regulated to operate at a speed of 2,800 r.p.m. by a centrifugal governor of very simple construction. The governor control permits only 3 per cent variation from normal.

The valve is of the balanced piston type, and is very sensitive in its operation.

The generator field coil is compound wound and consists of a single coil.

The brush holders are arranged in a fixed position, and the brush springs, when adjusted, have sufficient flexibility to insure a good contact on the commutator during the full life of the brush.

The generator will stand momentary overloads of 100 per cent, and the steam consumption under full load is 200 pounds of steam per hour.

Arc Headlight

The arc headlamp is mounted in a metal case approximately 16 in. by 22 in. by 29 in. The case is provided with a side door and numbers, and a patented front goggle, which permits of perfect ventilation, and reduces the breakage of headlight glasses.

The reflector is copper, silver-plated, 18 in. in diameter by 9 in. deep.

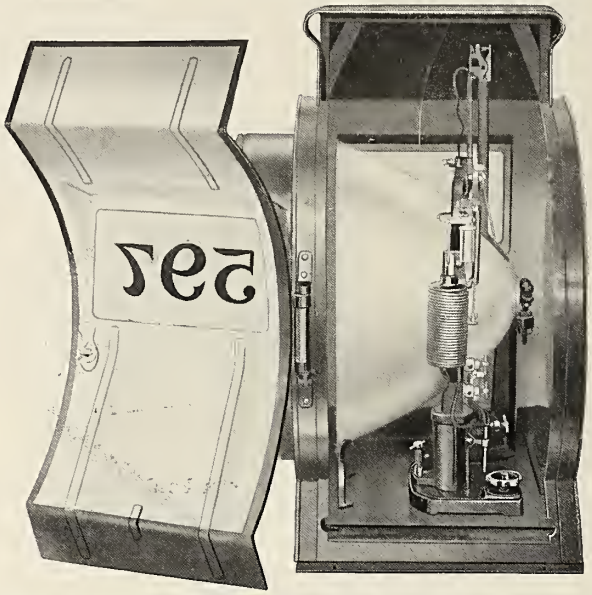

The arc lamp is provided with a positive electrode of carbon and a negative electrode of copper. The copper negative electrode is not consumed, therefore the crater of the arc is held in the focal center of the parabolic reflector. The arc lamp is entirely automatic in its operation. The carbon is fed by its own weight, and the length of arc is regulated through a series solenoid which operates a lever and clutch arrangement holding the carbon the required distance from the negative electrode to give the proper arc.

An incandescent pilot light is provided in front of the arc for use in case of emergency, or when the high candle power carbon light is not desired.

Incandescent Headlight

The lamp is mounted in a horizontal position through a hole in the back of the reflector, and is adjusted by a focusing device, which is capable of fine adjustment in any direction. The adjusting screws are provided with lock nuts so that when adjusted to a perfect focus the screws are firmly locked in position.

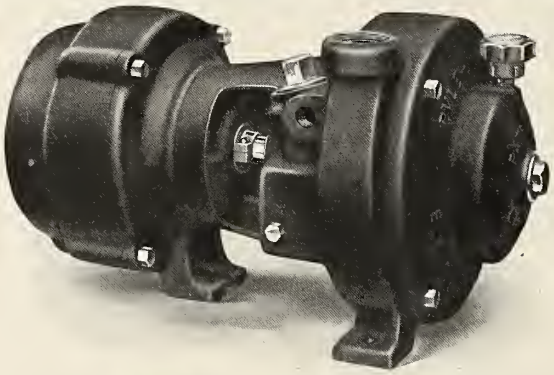

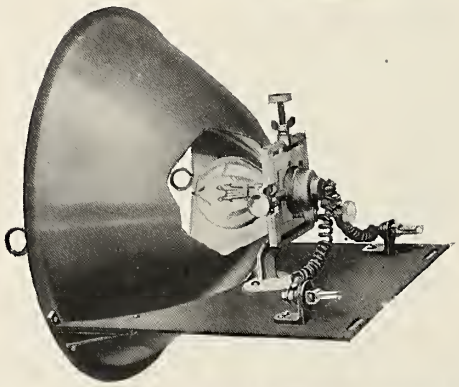

The Young Locomotive Valve and Gear

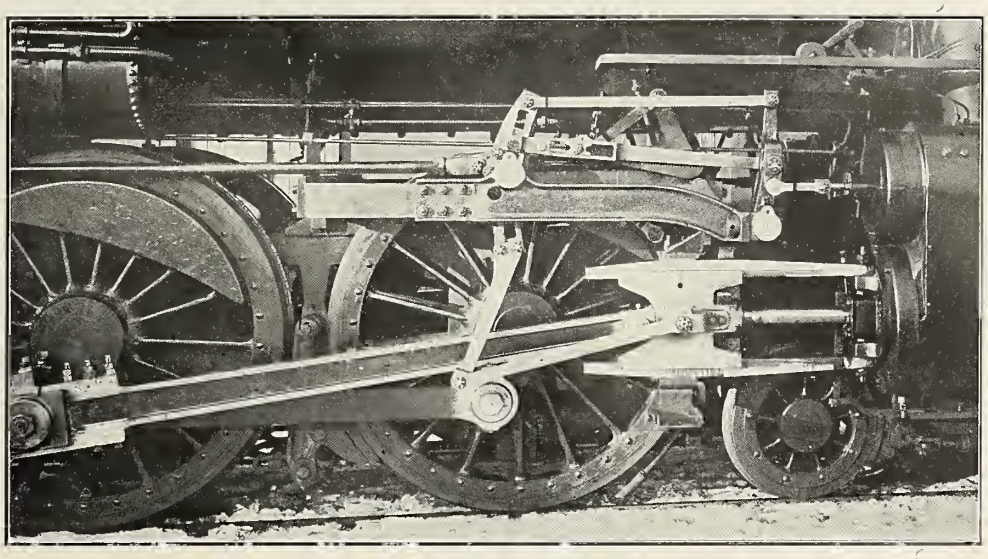

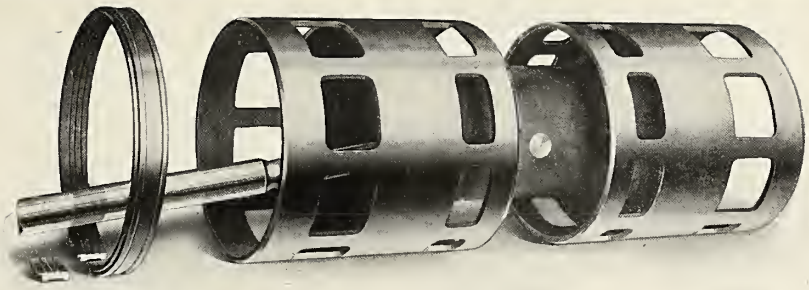

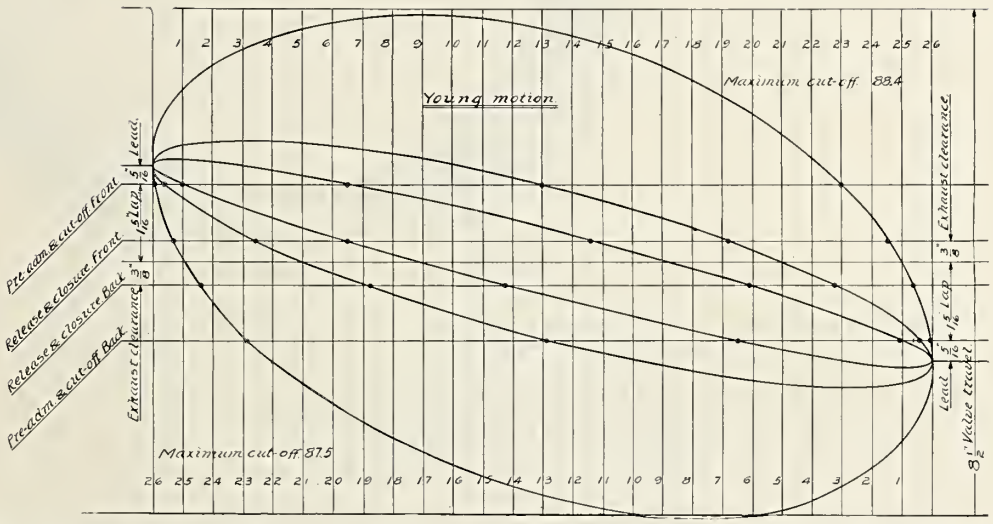

The Young Valve Gear

The Young Valve Gear, illustrated on dictionary pages 409 and 410, is actuated entirely by the crossheads, and is designed to give positive movement to the valve by the most direct method attainable.

In simplicity of construction, easy standardization and extreme lightness of moving members, it has decided advantages over all other gears.

It is designed particularly for application to large modern power, and has capacity in the way of decidedly greater valve travel without objectionable angularities than has heretofore been attained, making it an ideal gear for handling large cylinder volumes.

The valve travel is 8½ in., the sum of the lap and lead 1⅝ in., which produce unusually wide port openings, both for admission and exhaust, without sacrifice in starting power.

The Young Valve

The Young Valve is a single piece casting, cylindrical in shape, and of uniform thickness of metal throughout. It weighs only one-half as much as the ordinary piston valve.

The packing rings, instead of being carried by the valve, are recessed into the walls of the valve bushing and compress against the valve. The packing rings are so arranged that under slight wear their divided ends come in contact with a filling block which converts the valve automatically into a perfect plug, thus insuring unusual length of service and practically eliminates valve friction.

The practical advantages obtained from the above devices are a very decided increase to the locomotive's capacity in hauling unusually heavy trains on a running schedule, absolute reliability in starting and surprisingly decreased maintenance cost.

We can prove every statement made above.

"Standard" Steel Locomotive Specialties

Tires

Tires

"Standard" tires are made from open hearth steel ingots from which the porous portion is wholly eliminated, insuring homogeneity, solidity of the metal and a higher factor of safety. The selection of the material is made with the greatest care, and systematic tests, both chemical and physical, are made of the output from all departments. The "Standard" brand is recognized as a mark of superior quality, establishing for the Company the reputation of supplying material which is not excelled. The capacity of the Works has been increased until it is now sufficient to supply the entire requirements of the United States.

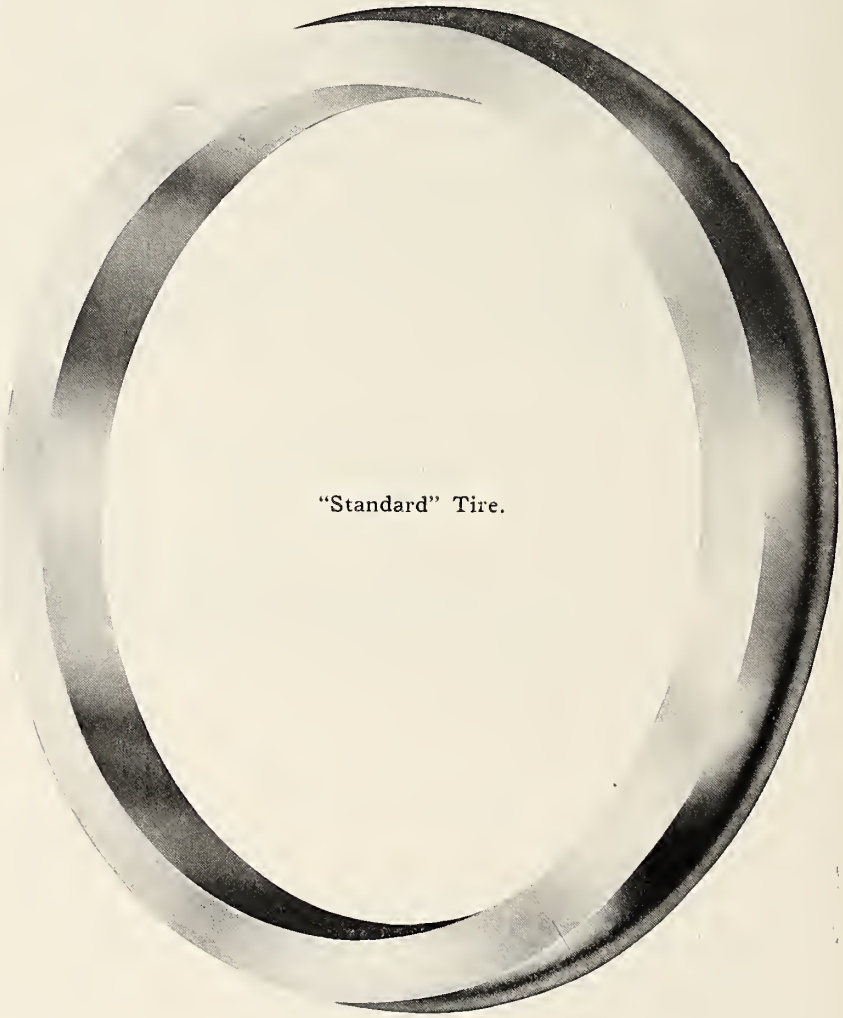

"Standard" Tire.

Steel Tired Wheels

Steel Tired Wheels

All types of steel tired wheels are manufactured by this company, but we recommend the bolted type, as it can be retired in any railway shop without skilled labor or special machinery. The type of construction, as illustrated, was introduced by this company in 1902 and has been adopted by the M. C. B. and M. M. Association as the standard type of wheel tire fastening. Should the tire be worn beyond the safety limit and break, there is no danger of the tire coming away from the center. With the rolled steel center this wheel is the most economical and best wheel made. It has given universal satisfaction in severe, fast service where durability and a high factor of safety are the principal factors to be considered.

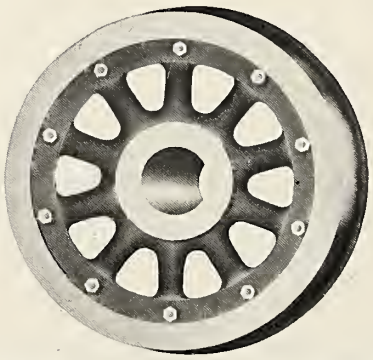

"Standard" Bolted Type Steel-Tired.

Rolled Wheels

Rolled Wheels

Solid forged and rolled wheels were introduced into America in 1904, in which year we began their manufacture. They were offered as a substitute for cast iron chilled wheels, which had proved inadequate for modern service. Their success has been so marked that the demand for steel wheels to replace the cast iron wheels under all types of equipment, from the lightest to the heaviest, is constantly increasing.

The solid wheel is just as important as the steel tired wheel, each type standing for equal merit in the class of service for which it was designed.

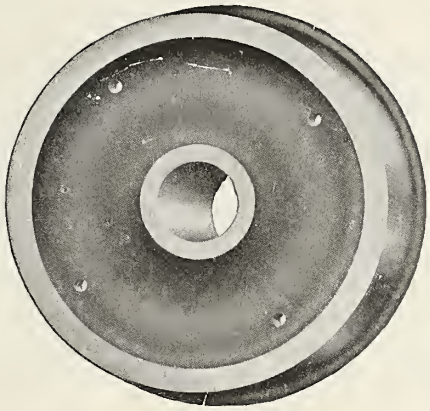

"Standard" Rolled Wheel.

Springs

Springs

Great care is used in the selection of the material and systematic tests are made of the work of each department to insure uniform high quality, thoroughly equipped chemical and physical laboratories being maintained for this purpose. "Standard" springs are specially designed for the service and conditions under which they operate. This feature, together with the quality of the material and workmanship, produces a spring that has long life and will give satisfaction in the most trying service.

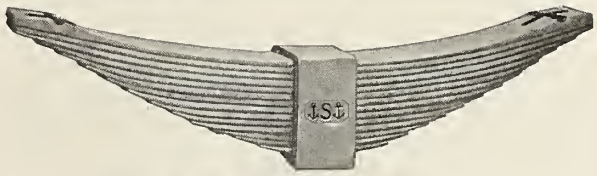

"Standard" Semi-Elliptic Spring.

All "Standard" full elliptic springs are constructed with "block ends" and sectional type unless they are specially ordered with "scroll ends."

The coil spring is used in groups and is made in single, double or triple coils.

"Standard" Coil Spring.

The manufacturing facilities and equipment of this company are unsurpassed. Our mills are equipped with the most modern machinery and automatically regulated furnaces which maintain the proper temperature for the making of spring steel. This, together with long experience, insures the highest grade product obtainable.

Axles

Axles

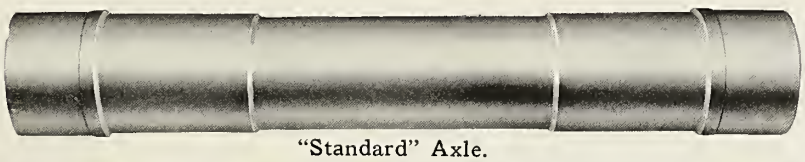

"Standard" Axle.

It is essential that axles shall be of material best adapted to insure both durability and wearing qualities. Experience has shown the constituent composition required to give these results and all blooms used for the manufacture of axles must conform to rigid specification. All axles are hammered throughout from the blooms and are subjected to the most rigid inspection by men trained in this work. Axles of any design or weight, either special or M. C. B. standard, can be furnished to meet the requirements of any practical specification.

Products and Sales Organization

Products and Sales Organization

The "Standard" brand on your material is an assurance of eventual economy. It insures long, safe and efficient service with low inspection and maintenance costs.

In addition to the specialties previously described we also manufacture rolled steel gear blanks; rolled steel rings: steel crusher-rolls and shells; steel pipe flanges; steel and iron forgings and steel and malleable iron castings.

The home office of this company is located at Philadelphia, Pa., and the plant at Burnham, Mifflin County, Pa. Branch offices are also maintained in the following cities: New York, N. Y.; Richmond, Va.; St. Louis, Mo.; Chicago, Ill.; Portland, Ore.; City of Mexico, Mex.; San Francisco, Cal.; Pittsburgh, Pa., and London, Eng.

Couplers

Requirements

The principal requirements in M. C. B. Freight Car, Locomotive and Tender Couplers are as follows: Automatic coupling, the mechanism being so designed as to couple and lock when the knuckle is closed by the impact of coupling; lock-to-the-lock, so that the lock cannot accidentally become uncoupled without operating the uncoupling lever; knuckle-opening, so that the knuckle may be fully opened ready for coupling by means of the uncoupling lever without the necessity of the trainman going between the cars to open the knuckle by hand.

It should be substantially constructed of the best material, simple in design, have as few parts as is consistent with effectively performing the functions above stated, meet with the M. C. B. Standards and recommendations, and all the requirements of the Safety Appliance Laws.

The Pitt Coupler The Penn Coupler for Freight Cars, Engines and Tenders

These couplers are our latest developments in M. C. B. couplers. They have all the up-to-date desirable features together with the simplicity of the early Janney type. They are made of a high quality acid open hearth steel thoroughly annealed, and designed to successfully withstand the severe usage of service.

They have all the functions recommended or required by the M. C. B. Association and Safety Appliance Laws, and are economical to maintain, automatic in operation, have a lock-set, a lock-to-the-lock and a knuckle-opener.

Lock-Set. Lock setting is accomplished by the locking block, when raised to the uncoupling position, resting on a seat, from which it is dislodged on the closing movement of the knuckle in the act of coupling.

Lock-to-the-Lock. The locking pin cannot climb, being held in the locked position by a trigger which engages the under side of the top wall of the coupler head, thus preventing accidental uncoupling.

Knuckle-Opener. The knuckle-opener pushes the knuckle open to its fullest range of movement from a

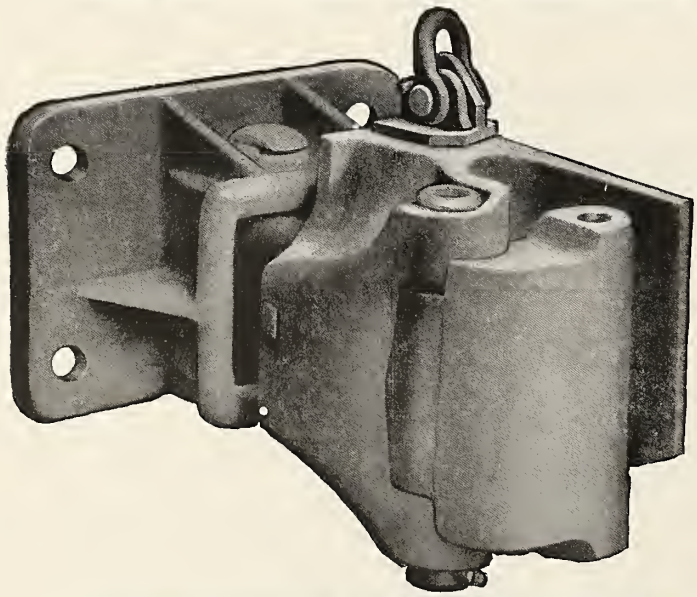

fully closed position or from any partially open position, and its path of movement is such as to insure easy and complete opening of the knuckle.

These couplers are made in both the M. C. B. shank and pivot type. The shank type is suitable for use on freight cars and locomotive tenders in connection with any standard draft gear, while the pivot type is used with a coupler pocket on either locomotive tenders or front of engine. The coupler pockets made by this company are of simple and efficient design for use on either front or rear ends; the flanges are made to suit the individual requirements of the application. They are heavily ribbed and designed to stand the severest service. The material used is the same high quality acid open hearth steel as used in the manufacture of couplers,

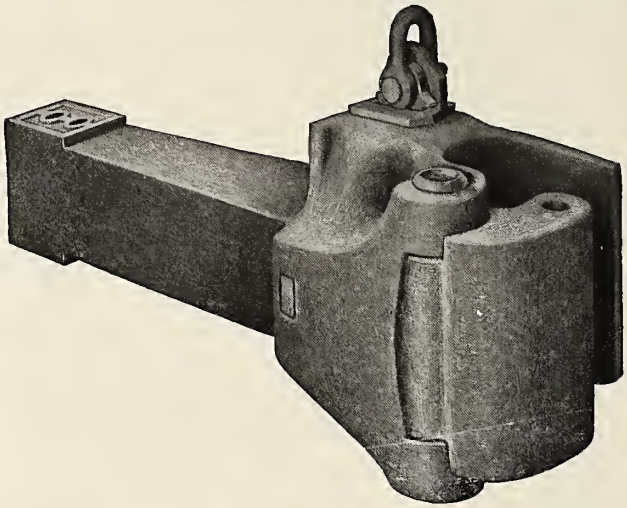

carefully annealed, producing a casting of uniform quality and great strength.

Especial attention is called to the large area of the locking surface (practically five square inches) on the locking block and the knuckle of the Penn coupler, and to the fact that no portion of the locking block extends below the bottom wall of the coupler. The large area of the locking surface on the locking block and the knuckle insures durability.

Among the many desirable features of the Penn coupler is that of easy accessibility of parts, thus facilitating repairs. To remove the lock it is only necessary to take out the clevis pin cotter and lift out the trigger. After the locking block has been removed the knuckle-opener can be lifted out through the opening in the top of the coupler. By this arrangement the necessity of first removing the knuckle pin and knuckle, in order to get at the locking block, is obviated. When the locking block is lifted by means of the chain on the uncoupling lever, it cannot come out, being prevented by the projecting lower end of the trigger.

With the knuckle open the locking block is held in such a position as to make coupling positive when the knuckle is closed.

The design and simplicity of these couplers reduces maintenance charges and keeps the equipment in service.

The quality of the material and the method of manufacture produces uniform metal of great strength.

Manufacturing Facilities

This company is one of the oldest and largest manufacturers of cast steel and malleable iron specialties for railroad work. The factory and equipment are modern in every respect, the latest devices tending to improve quality and increase production are employed, and the organization is composed of men especially skilled in their line. All work is carefully inspected and tested by this company to determine any defects and any product not meeting these tests is rejected. This method insures the durability and proper performance of all products.

Davis Cast Steel Wheel

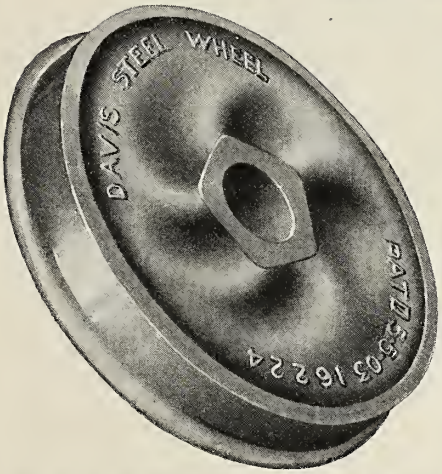

The essential feature of the Davis steel wheel is that it combines in one casting a hard, tough manganese tread and flange, and a medium, soft, open hearth steel plate and hub. It has the strength demanded by present day equipment, but retains the advantages of the time-tried, one-wear principle. Its hard manganese flange and tread resist not only wear, but shock, and it is possible to obtain the full mileage value without the expense incident to turning the wheel down several times. The tread of each wheel is ground to contour, insuring perfect rotundity, and the percentage of "slid flats" is greatly reduced. Tests have shown the strength of that vital part—the flange—to be very high. The Davis wheel also effects a saving in dead, non-revenue weight of from 1,000 to 1,600 pounds per car. This item alone shows a saving, in addition to the decrease in maintenance expense. The cost per thousand miles is the measure of its service.

Brake Beams

Vulcan Tender.

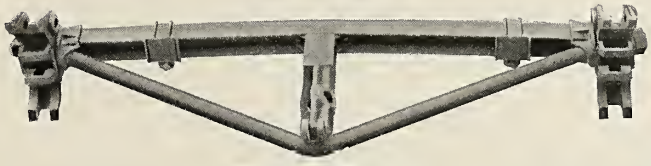

Hercules Tender.

Ajax truss beams for freight service are furnished in any capacity desired. Requirements for tender and passenger service are met by Hercules, Vulcan and Ajax beams. All these beams have channel compression members and round tension members, a type of construction which gives the most satisfactory results. Compression channels and tension rods are made of open hearth steel and to rigid specifications.

Bolsters

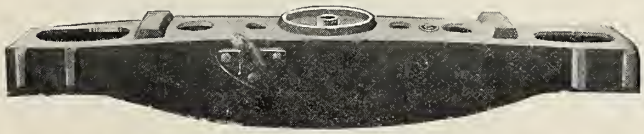

The cast steel box-shaped, truck bolster shown in the illustration, unquestionably provides the simplest and strongest design obtainable for locomotive tenders and freight equipment. Its one-piece simplicity and great strength eliminate maintenance expense. Although we make other shapes and designs of bolsters, including the Simplex, we strongly recommend the cast steel box bolster as the most satisfactory.

Springs

Coil, elliptic and volute springs in any capacity desired are manufactured in our spring plant at Hammond, Indiana.

Simplex Coupler and Pocket

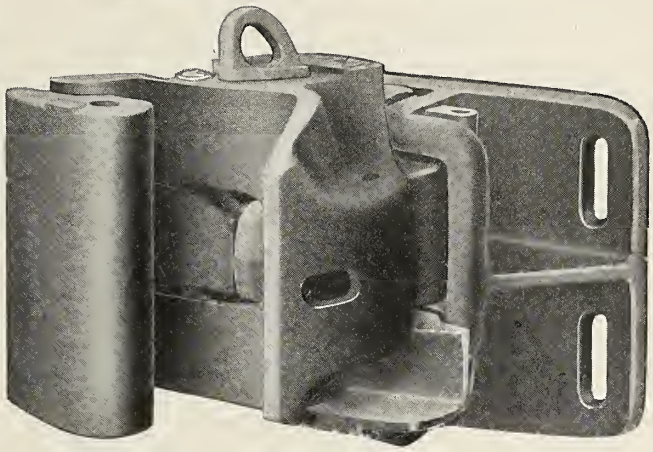

The Simplex coupler pocket for use with pilot couplers and short shank tender couplers has an interlocking detachable shelf which holds the coupler head horizontal. This shelf can be detached immediately and the pocket reversed to obtain a greater vertical adjustment than is possible by the use of the slotted holes by which the pocket is fastened to the sill. The reversibility and simplicity of the Simplex coupler pocket reduces the number of designs required for different classes of engines.

The Simplex coupler for engine, tender, freight and passenger service has a knuckle of unusual strength. Its parts are few and its action is positive.

Vulcan Truck

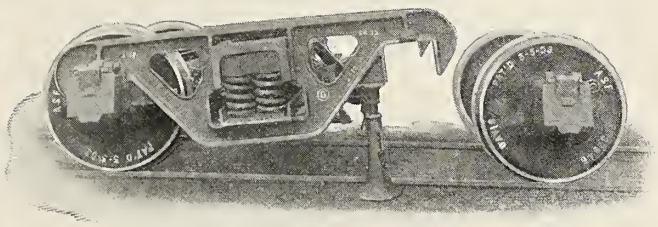

The Vulcan side frame incorporates in a simple one-piece steel casting strength and light weight. Its pedestal ends fit over and around the journal boxes, holding them securely. It eliminates the use of a large number of bolts and nuts. The separable journal boxes, should they be broken, do not involve the loss of the side frame. In changing wheels with the Vulcan truck it is only necessary to remove one small safety tie bolt over each journal box, jack up the ends of the truck and roll out the wheels.

Steel Castings

Driving wheel centers, engine frames, cylinder heads, stuffing boxes, etc., are among the steel castings for car and locomotive use which are constantly passing through our foundries. We also have a fully equipped foundry for the manufacture of electric steel castings. Crossheads, valve links and other reciprocating parts, can be made stronger without an increase in weight by making them of electric steel. We concentrate on your steel castings the expert knowledge of our nine plants.

Economy Draft Arm

A cast steel arm for strengthening the center sills of old wooden underframe cars, thereby extending the revenue-producing life of such cars.

Susemihl Side Bearings

They contain no springs or other small parts to become lost. By means of a lever, the carriage compels the rollers to roll and to return to their proper positions after rolling.

Gould Friction Draft Gear

Description

The purpose of the Gould Friction Draft Gear is to relieve the underframe of the severe buffing and pulling shocks received in service.

The gear shown in the illustration is of the spring loaded friction type and is designated as type FDG-175. It consists of a casing, containing extra heavy, double coil spring, a center follower, two wedges and two leaf spring elements. Only one

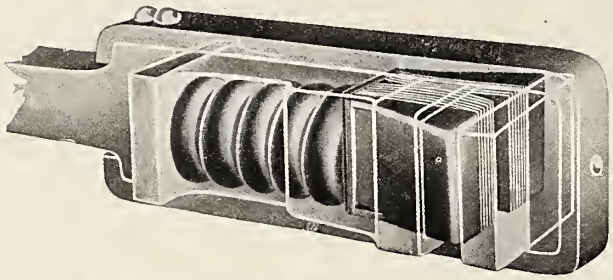

wrought follower block is required, the rear of the casing forming the other. It is designed to fit in the standard M. C. B. pocket space of 9⅛ in. by 12⅞ in. by 24⅝ in.

The gear is of sturdy design and is simple in construction. The casing is made of cast steel. The wedges are of case hardened steel and have large wearing surfaces, thus reducing the pressure per square inch to a reasonable limit, which insures long life to the parts. The heavy release spring insures positive release under all conditions.

In operation, either pulling or buffing tends to crowd the friction blocks into the casing. The crowding of these blocks compresses the leaf springs between them and also compresses the coil spring in the casing, thus absorbing the shocks, preventing the underframe receiving excessive strains, and insuring a smooth and uniform action free from jars or jerks.

The maximum travel of the draft gear is 2½ in. and compression tests show this gear, when equipped with 20-plate leaf springs, to have a capacity of 243,000 lb. These tests also show that the travel of the gear increases uniformly with the load, thus indicating a smooth action throughout the gear travel.

The tests also show a remarkably low release line, which eliminates the possibility of a heavy recoil with its disastrous results.

The capacity of the gear can be reduced, if desired, by merely removing two or more leaves from the leaf spring elements and substituting shims. This change in capacity may be made without changing any of the other parts. Shims may also be used to compensate for wear, thus maintaining the full capacity of the gear.

The cast steel casing is strong in design and is well able to withstand all buffing shocks above the capacity of the gear.

Gould Cast Steel End Sill with Self-Contained Friction Draft Gear and Buffer

Description

This beam has been designed for an efficient draft gear and buffing device for locomotives in heavy service.

The beam is of simple design, comparatively light in weight with the metal distributed to insure maximum strength.

The draft and buffing gear is compact and increases but little the weight of the beam.

It is designed for use with the standard pivoted type locomotive coupler, attached to a wrought yoke by a pivot pin which is inserted through a hole in top of beam and is covered by a cast steel cap removably attached to to top of the beam.

The end of the coupler butts directly against a cast steel wedge with case hardened faces which in turn actuates a pair of cast steel wedge plates against nests of leaf or plate springs pocketed in beam, the resistance of which may be varied to suit operating conditions, these wedge plates being restrained from moving in direction of buff by a rear steel follower passing through yoke and abutting against shoulders in the beam.

In pulling, the operation is reversed; the cast steel wedge being restrained from forward movement by stops in front of beam against which it abuts; while the follower and wedge plates move with the coupler and yoke until wedge plates have made their maximum travel.

The two leaf spring elements are inserted through holes in bottom of beam and are securely held in place by steel caps, secured by bolts, extending entirely through beam.

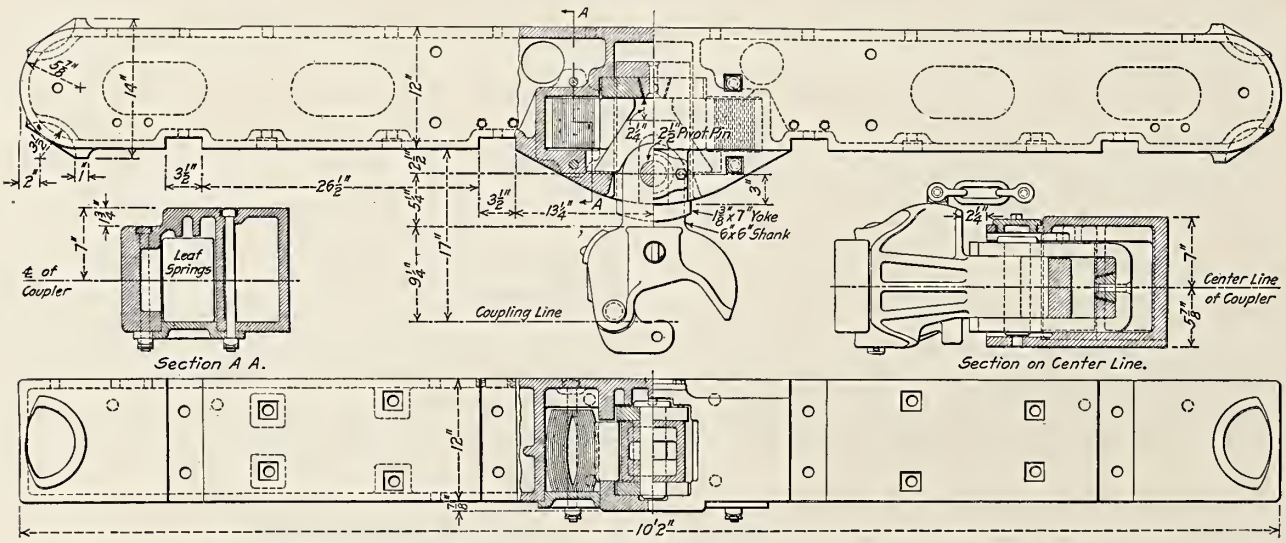

Wedge, wedge plates, follower and yoke are assembled through front opening and cannot be removed while coupler pivot pin is in place.

A capacity of 150,000 lb. with a travel of 2¼ inches is recommended, but these can be varied to suit requirements.

Capacity of device can be reduced at any time by removing a suitable number of leaf springs and substituting shims which also provides an easy method of adjusting for wear of parts.

Barber Lateral Motion Truck Device for Tender Trucks

Description

The lateral motion truck device is the original and the only simple effective substitute for swing hanger trucks. It can be applied to any make of bolster or side frame and is made in sizes for all capacities. The roller caps and seats are made of cast steel and the steel rollers are extra long.

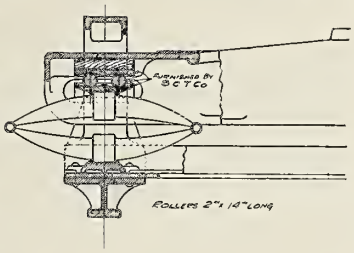

Advantages

By the use of the lateral motion device wear on the flange, coupler knuckles and journal bearings is relieved, the torsional strains on tenders and truck frames are reduced and the cause of derailment is greatly lessened. As shown in the accompanying illustration, this device makes possible a very low height of truck.

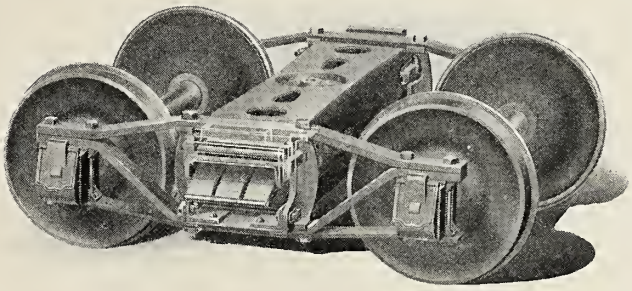

Barber Lateral Motion Trailer Truck

Description

The design of this truck greatly simplifies the parts necessary for a lateral action of trailer wheels under locomotive fireboxes. As shown in the accompanying engraving and line drawing, the bearing on each side of the truck is composed of two large longitudinal rollers resting on concave seats. All castings and rollers are made of steel.

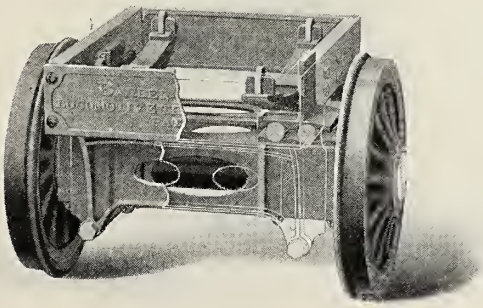

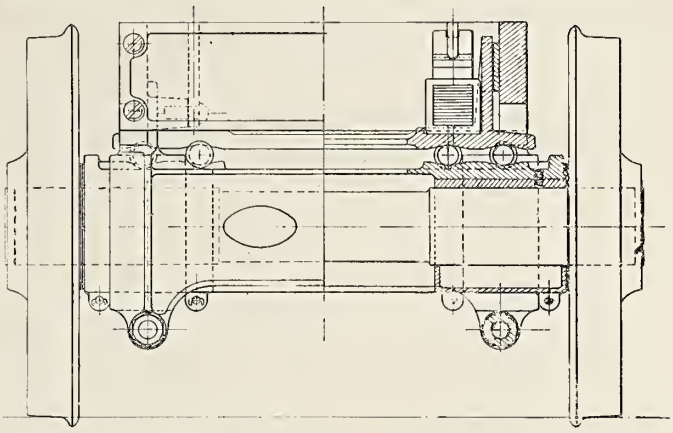

Advantages

This truck greatly reduces the strain on the locomotive frame by providing ample lateral play to the trailer wheels. The first cost is less than that of similar devices now in use, and it is inexpensive to maintain.

Barber Roller Bearing Side Bearings

Description

These bearings are built especially heavy for locomotive tenders. The housings are large size, contain an ample thickness of metal and are made of malleable iron. The rollers are made of a special grade of hard iron and have steel bushed bearings. The pins are of rolled steel and case hardened.

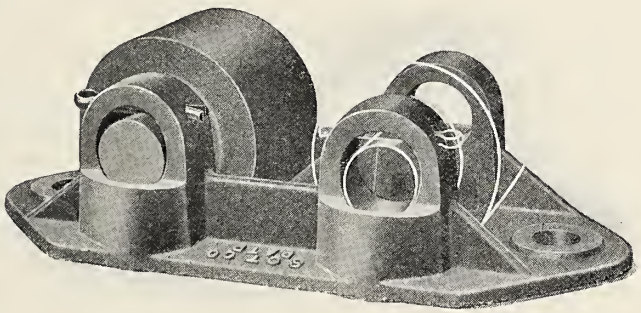

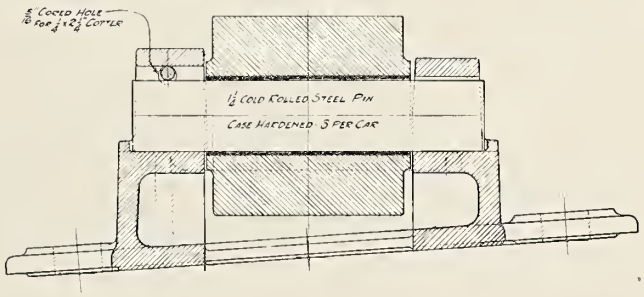

Advantages

The rollers are unlimited in their scope of movement. They do not wear flat or get out of place. There are few parts, all of which are exceptionally strong, making possible minimum first cost and least cost for maintenance.

Steel and Malleable Iron Castings

Product

Malleable iron and steel castings for railroad purposes are manufactured by this company. The highest grade of raw material, years of experience, and the latest and most improved machinery combine to make a high grade finished product.

Buffalo Journal Box

The Buffalo journal box produced by this company is made entirely of malleable iron. The design of both box and lid incorporates an adequate thickness of metal which gives ample strength and assures long life under all service conditions. It is, therefore, particularly well adapted for use under locomotive tenders. Two coiled springs, always under tension, hold the lid firmly in closed position, thus preventing all wear from lateral vibration and taking up automatically any wear in the pin holes. If the lid is accidentally left in any open position, the vibration of the moving truck will cause the lid automatically to close and lock. M. C. B. dimensions are maintained in the hinge lug and lid so that in an emergency M. C. B. lid with flat spring may be applied.

Steel Castings

Locomotive frames, wheel centers, driving boxes and miscellaneous steel castings of every description are produced. Extensive experience and proper shop equipment, together with an organization skilled in this particular line of work, results in the production of locomotive castings that are of uniform quality and as close as practicable to the finished dimensions. Well equipped laboratories, both chemical and physical, insure the product will meet the specifications in every particular. To meet the demands of this class of work, calling for special heat treatment, a well equipped and highly efficient annealing department has been developed. This results in steel castings receiving the proper reheating treatment which is so important in locomotive work.

Malleable Castings

The malleable iron produced by the Pratt & Letchworth Company is of a grade particularly suitable for railroad purposes. Long experience in manufacturing malleable castings for railroad service and the use of only the highest grade of raw materials has given this firm an enviable reputation for the quality of this product which is peculiarly suited to so many railroad purposes.

Chemical and physical tests of every cast of iron insure in all castings a uniform material of the desired grade, and a modern, thoroughly equipped annealing department insures that every casting receives the proper heat treatment.

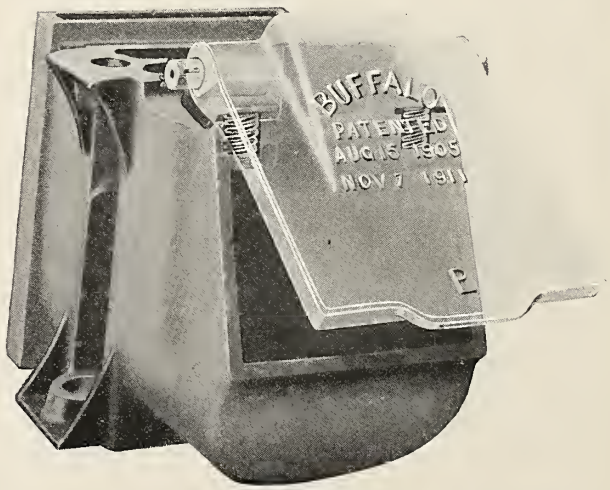

The illustration shows an arch bar type journal box, but the pedestal type is also made for use with the cast steel pedestal type truck.

Tate Flexible Staybolt

For Locomotive Boilers

Requirements

The ordinary or rigid staybolt is too stiff to resist the combined stresses of tension and bending, due to pressure and expansion of firebox sheets, and is responsible for a too rigid connection in the firebox assemblage.

The Tate Flexible Staybolt permits greater freedom in the movement of expanding sheets, and minimizes the stresses in both sheets and staybolts by allowing the firebox to expand under less restriction.

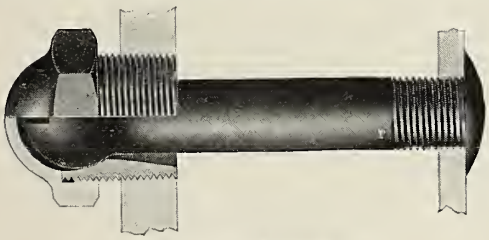

The Standard Type.

Description

The Tate Flexible Stay bolt is simple, strong. and serviceable; easily applied and renewed; and is constructed of materials best suited for the purpose.

The Tate Flexible Staybolt is manufactured in three styles:

The Regular Standard Water Space Staybolt consists of three parts, Cap, Sleeve and Bolt, with several sleeves and bolts to suit the requirements of firebox design.

The Flush Type of staybolt consists of Plug, Sleeve and Bolt; one sleeve is suitable for all size bolts commonly used. This bolt is used behind pads, frames and brackets.

The Radial Adjustable Crown Stay consists of Cap, Sleeve and Round Nut to fit the railroad standards for button head staybolts. Radial bolts with riveted ends are supplied and fit the radial sleeves.

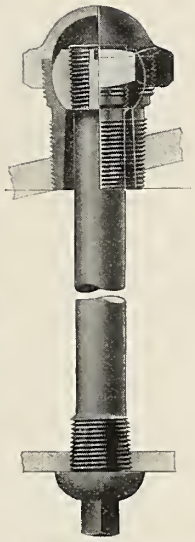

Adjustable Crown Stay.

Advantages

The use of the Tate Flexible Staybolt as a connecting member to hold outer boiler sheet and firebox sheets together has thoroughly demonstrated its practical advantages, in locomotive boiler service, over the solid stay, in not only reducing staybolt breakage, but in great measure overcoming the cracking of fire sheets,

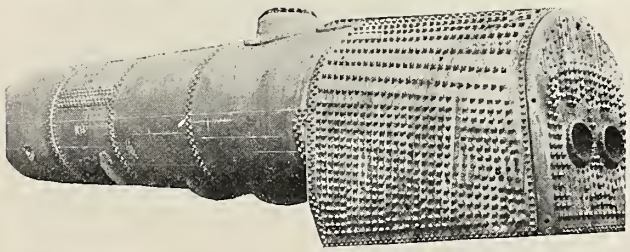

Complete Locomotive Boiler Installation of the Tate Flexible Staybolt.

and leakages at seams and rivet connections, by the relief afforded due to the flexibility of the staying members.

The mechanical functions of the Tate Flexible Staybolt are in no way interfered with by presence of incrustation; and by the removal of the cap at stated intervals, inspection of the staybolt can be readily made.

The sleeve or bushing is independent of all other parts, and is thus easily secured tightly to the outer boiler sheet. The bolt is threaded and inserted through sleeve and screws into the fire sheet until the round head of bolt seats itself in the semi-spherical seat of sleeve, when it is nipped off and riveted over. The cap is then applied to the sleeve, making a steam tight joint.

This type of staybolt allows for certain adjustments in localities of the firebox where expansion is the greatest, thus relieving the staybolt of any excessive stress

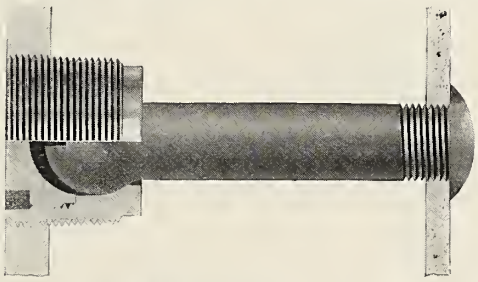

The Flush Type.

due to firebox expansion at the corners and in the throat sheet.

The Adjustable Crown Stay allows the upward movement of the firebox under expansion with little or no resistance, and can be adjusted normally to obtain equal tension on all bolts.

Application and Maintenance

The Tate Flexible Staybolt can be applied to any firebox, by the removal of the ordinary staybolt, and then enlarging the hole in outer sheet, with tools provided, for application of the sleeve in alignment with the hole in fire sheet, when the operation of installing the bolt can be readily made. In the application to new fireboxes, simply follow old methods, only using special reamers and taps provided for the outer sheet connection.

In 1904 installations were quite small and were made to cover the breaking zone of the solid staybolt. By gradual use, and known discoveries in the economy and maintenance of the Tate Bolt, its application was extended to cover greater areas, and in 1915 upwards of 400 locomotive boilers have obtained complete installations.

While the first cost is somewhat higher than the ordinary staybolt, the saving effected by the use of the Tate Flexible Staybolt in reducing the costs of firebox repairs, renewal of staybolts and engine time lost is sufficiently great to justify its use.

Catalogue and literature containing all the information necessary will be furnished to those writing for same. See Figs. 220 to 224, page 263.

Sales Organization

The General Offices of the Flannery Bolt Company are located in the Vanadium Building, Pittsburgh, Pa.

J. Rogers Flannery & Company, Sales Agents, Vanadium Building, Pittsburgh, Pa.

President and General Manager.....J. Rogers Flannery
Vice-President.....B. E. D. Stafford
Eastern Representative.....Geo. E. Howard
Western Representative.....Wm. M. Wilson
Southeastern Representative.....Commonwealth Supply Company (Thos. J. Leahey & Barton H. Grundy)
Boiler Expert..... .....Charles Hyland

Watertown Automatic Cylinder Cock

Description

The Watertown automatic cylinder cock is designed to keep the locomotive cylinders free from water at all times and is extremely simple in construction and operation. The body is made of gray iron; the valve seat is a Tobin bronze bushing, which may be easily reseated or replaced; the ball, the only moving part, is made of bronze accurately ground to size and capable

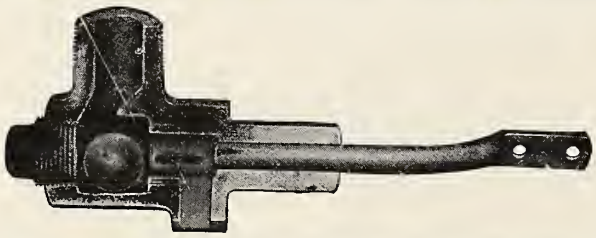

of resisting the corroding action of steam and impure water. A screw plug at the end of the ball chamber can be readily removed facilitating inspection or cleaning of the valve.

The cock is small in size though large in port openings, compact and rigid in construction and capable of withstanding the abuses of everyday service.

Operation

While the engine is running the ball is held tightly against its seat by steam pressure, thus shutting off any communication between the cylinders and atmosphere. As soon as the throttle is closed the pressure against the ball is released and it automatically falls away from its seat to the bottom of the chamber, thus opening the drain ports and leaving a clear passage for any condensation to drain from the cylinder.

The drain cock can also be operated from the cab whenever necessary. In this case the plunger, which is shown in the illustration, holds the ball off its seat thus keeping the cock open while the engine is running. This plunger is operated by the regular cylinder cock rigging.

This cock also acts automatically as a drifting valve since the ball unseats the instant the throttle is closed, thus opening the cylinder to atmosphere. This also serves to prevent oil being drawn from the lubricator pipes.

Advantages

Owing to its size it gives greater road clearance than is usually obtained. This lessens the danger of damage and breakage from obstructions of flying stones.

It prevents damage that would ordinarily result if the engineer neglected to open the train cock in starting, as it automatically drains all condensation from the cylinder. Since it is always open when the engine is standing, it eliminates the possibility of the cylinders filling up with water if the throttle happens to be leaky.

The life of the valve is practically unlimited, the only parts subject to wear being the bronze ball and the seat bushing and these are readily renewed.

Unless purposely held open the cock is instantly and automatically closed when the throttle is opened, thus preventing the spattering of oily water and steam on the persons standing on the station platform.

It reduces the maintenance cost of the locomotive by preventing damage to the cylinders.

The Watertown Blower Pipe Drain Fitting

Description

The Watertown blower pipe drain fitting is a device for automatically draining all water of condensation from the blower pipe. It consists of a body casting made of malleable iron, fitted with Tobin bronze bushings, which act as seats *F* and *G* for the ball check *D*. The ball is of gun metal, 1⅛ in. or 1 3/16 in. in diameter, according to the size of the fitting. It is ground to size and is made of a composition that will resist all corroding action of high pressure steam. The ball is easily removable for cleaning by disconnecting the blower pipe nipple *A*.

These fittings are made for 1-in. and 1¼-in. blower pipes, but modifications of the general design of the body may be made to suit special conditions.

Operation

The operation of the valve is automatic under all conditions. The ball is unseated by gravity when the blower is not in use permitting all condensation to drain into the cinder hopper or any other point to which the drain port *C* may be piped. As soon as the blower valve is opened the steam pressure seats the ball, permitting the entrance of steam to the blower nozzle only.

Another feature of this valve is its adaptability for use when starting fires in cold boilers in the roundhouse. In this case the blower hose may be connected to the end of the drain pipe by a suitable connection and steam admitted to the blower nozzle through this valve. When the steam is turned on the ball in the drain valve moves away from its regular seat *F* and seats against the seat *G* in the blower pipe nipple. This

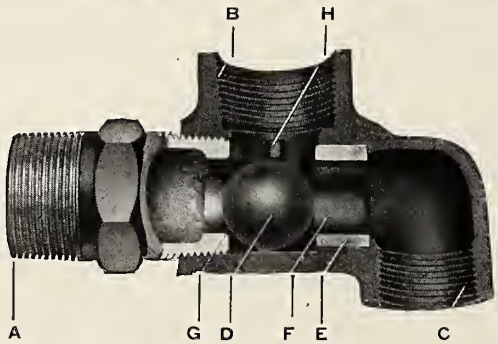

effectively shuts off all connection with the blower pipe and all the steam enters the blower nozzle. This arrangement also prevents the steam from backing up in the boiler in case the blower valve leaks.

Advantages

The Watertown blower pipe drain fitting automatically drains all water from the blower pipe, insuring a dry pipe at all times. This eliminates all possibility of discharging water-soaked soot through the stack and thereby ruining the clothes of persons on or near station platforms, and also prevents the pipe from freezing up in winter.

Railroad Specialties

Q & C Ray Snow Flanger

The Q & C Ray snow flanger, illustrated in Fig. 1, is built for application to the leading truck of the locomotive. It is designed to remove a light fall of snow from the track and also scrape off any snow and ice that may be frozen to the rails.

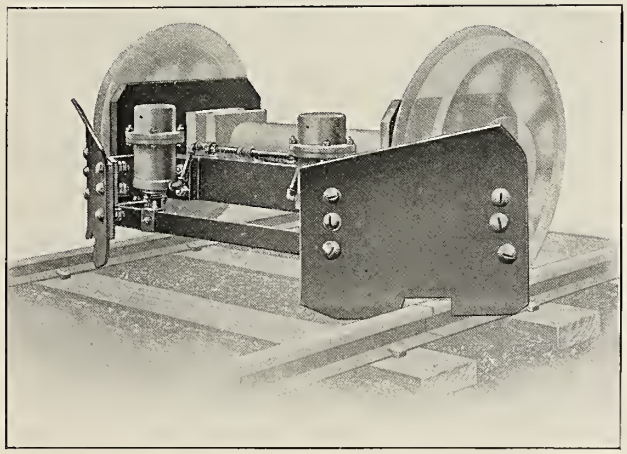

Fig. 1.

The Q & C Ray snow flanger is simple in construction. It consists of two plates of sheet steel supported by brackets, these brackets being secured to the truck frame. The two plates push the snow to the outside of the rails, the top edge of the upper plate being curved downward to keep the snow from climbing over it and packing on the truck. The lower plate is slotted for the rail head which it effectually clears of snow and ice.

The Q & C Ray snow flanger can be made to take a considerable depth of snow, eliminating in many cases the necessity for the use of snow plows and other heavy snow fighting equipment.

Q & C Fewings Car & Locomotive Replacer

The Fewings replacer, illustrated in Fig. 2, is regularly made of annealed open hearth cast steel, but when specified manganese steel can be furnished. It is made for use on any size of rail and weighs from 125 lb. for the 60-lb. type to 234 lb. for the special "High B" type for use on higher rails.

The outside contour forms a perfect arch which is heavily reinforced by ribbing on the under side. This construction gives exceptional strength and by proper

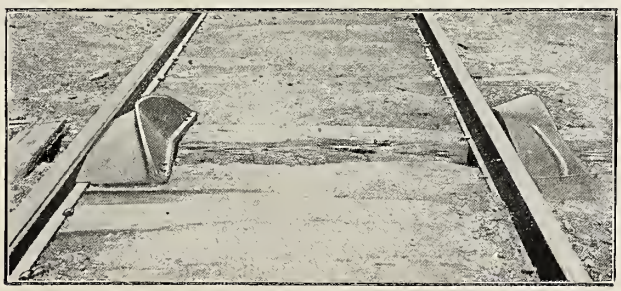

Fig. 2.

metal distribution the weight has been kept low. It is provided with ribs to guide the wheels on to the rail, and with ample caulks to hold the replacer in position. Spike holes are also provided for use in emergencies.

The Fewings replacer is light enough to be easily handled by one man and sufficiently strong to support the heaviest locomotive. It is high enough to properly do the work intended and yet not interfere with the under-rigging of the locomotive. Its compact design permits its use on bridges, trestles, planked crossings and around interlocking plants.

Q & C Skid Shoe

The Q & C skid shoes, illustrated in Fig. 3, are made of open hearth cast steel. They are used as an emergency tool for skidding defective cars, that cannot be rolled on their own wheels, to side tracks and also as a buffer or brake to stop runaway cars at the foot of inclines or on terminal tracks.

The skid shoes are applied by placing them on the rail in front of the crippled wheels. The wheels are

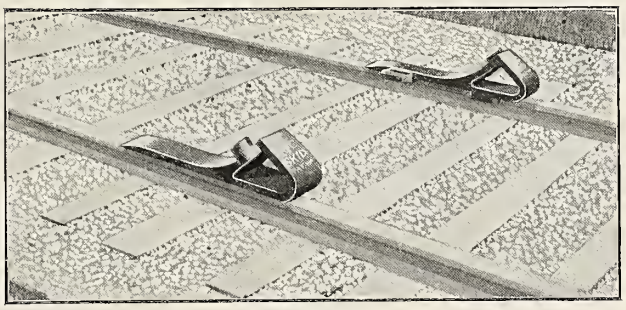

Fig. 3.

locked for forward movement when rolled on to the skid shoes, making chaining unnecessary. These shoes will slide wherever a wheel will roll. They will pass any switch, frog or crossing and around all curves. They are particularly valuable in caboose equipment as they enable train crews to quickly clear the main line of cars that become so disabled as to prevent movement on their own wheels.

The Q & C skid shoes may be also used for plowing down ballast. By placing a pair under the leading wheels of a car, in front of which a tie has been placed, the skids prevent the wheels being slid flat.

Q & C Gilman-Brown Emergency Knuckle

The Gilman-Brown emergency knuckle, illustrated in Fig. 4, is designed to fit every M. C. B. coupler in general use. It is made of a high grade of open hearth cast steel and is sufficiently strong to pull the heaviest train. It is light in weight and convenient to handle. It is used to make emergency repairs to defective couplers and permits coupling the cars without the necessity of chaining up. It makes a normal coupling as

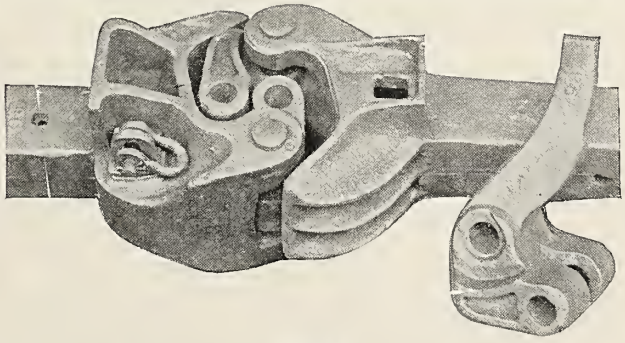

Fig. 4.

close and strong as if made between two uninjured couplers, and permits safely coupling the air line without the use of dummy hose. It saves time in mending break-in-twos and thus avoids traffic delays. With this knuckle it is possible to make a coupling when one pin lug is broken off.

Morse (Silent Chain) Power Transmission

Design and General Description

The Morse Silent Running Power Chain is essentially a steel belt made of flat links so shaped and arranged as to form teeth on one side of the chain which engage with teeth cut in the sprocket wheel on which it runs. It is used in place of belting and gearing to transmit

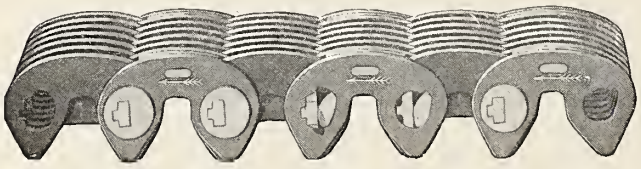

Section of Morse Chain showing the "Rocker-Joint."

power for any purpose, and is made in sizes varying from ⅜-inch to 3-inch, and intermediate pitches and in powers from ¼ h.p. for 3,000 r.p.m. to 5,000 h.p. for 150 r.p.m.

By its use power can be transmitted with a positive speed ratio on short centers, quietly and with an efficiency of almost 99 per cent.

The Morse "Rocker-Joint"

This high efficiency is due to the use of the Morse frictionless "Rocker-Joint," which consists of two pins of hardened tool steel, each forming half of the joint, and so shaped and held that, as the chain bends, the rounded edge of one pin rolls or rocks upon the flat side of the other, thus substituting a *rolling* action for the *rubbing friction* in all other makes of joints.

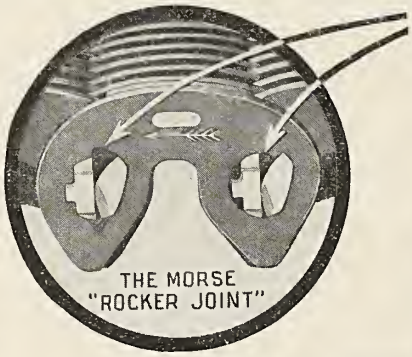

When the chain is pulled out straight (as between sprockets) the flat seat pin bears against one of the flat faces of the rocker pin, so that it is only when the chain bends around the sprockets that the load comes upon the rounded edge of the rocker pin.

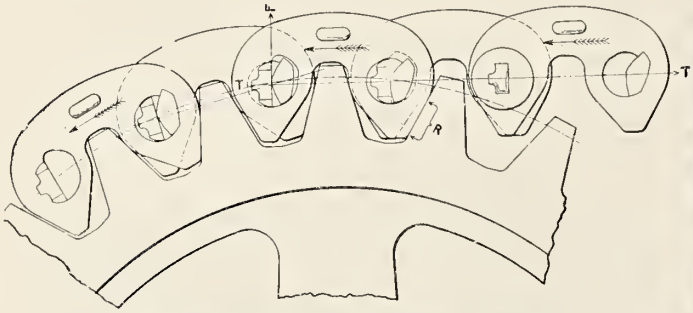

Morse Chain on Sprocket Wheel.

Parts and Materials

A "silent chain drive" consists of driving sprocket, driven sprocket and silent chain, the sprockets bored and keyed to customer's specifications, and the drive ready for installing at once. Driven sprockets are usually of cast iron. Driving sprockets are of cast iron or steel as the service requires. Alloy steels, best suited for the work, are used for all links and joint pins, and these parts are heat treated.

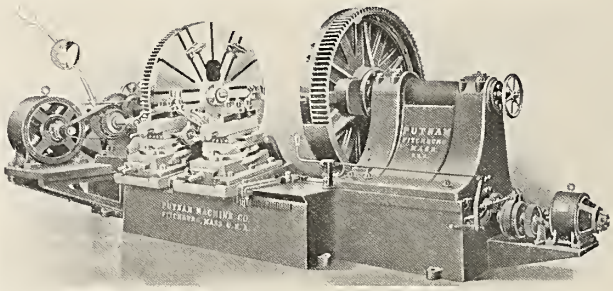

Putnam Mogul Type 90-inch Double Headed Driving Wheel Lathe Driven by Morse Silent Chain.

Notes for Preliminary Designs

(1)—Use odd number of teeth in sprockets whenever possible. (2)—Thickness of sprocket rim, including teeth, should be at least 1.2 times the chain pitch. (3)—The width of the sprocket should be ⅛ to ¼ inch greater than the nominal width of chain. (4)—An even number of links in the chain and an odd number of teeth in the sprockets are desirable. (5)—Avoid vertical drives. Horizontal drives preferred, with slack on top strand, but for short drives without center adjustment slack should be on the bottom strand; tight chain on top desirable for short drives without center adjustment. (6)—Adjustable wheel centers desirable for horizontal drives and necessary for vertical drives. (7)—Allow side clearance for chain equal to the pitch. (8)—Maximum linear velocity for commercial service 1,200 to 1,600 feet per minute. So many features and conditions must be considered in the successful design of a silent chain drive that better service can be had by turning all problems over to our engineers in their embryo state. No charge whatever is made for engineering assistance. Address the office nearest you for literature and detail information.

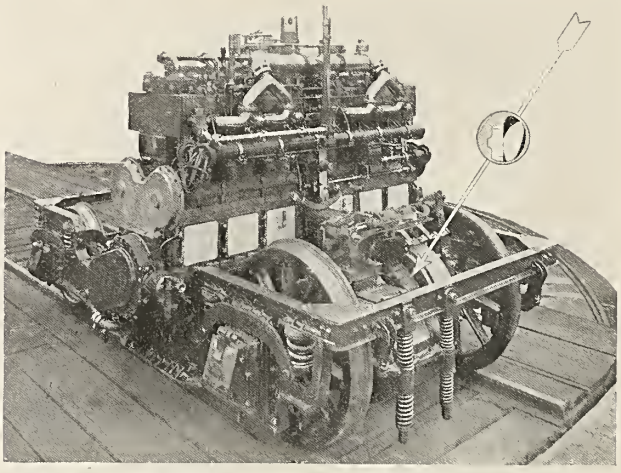

Chassis of McKeen Gasoline Motor Car showing application of Morse Silent Chain.

Sales Organization

BRANCH OFFICES

NEW YORK.....50 Church Street
BOSTON.....141 Milk Street
CHICAGO ...Merchants L. & T. Building
PITTSBURGH.....Westinghouse Building
CLEVELAND.....421 Engineers Building
DETROIT.....1003 Woodward Ave.
SAN FRANCISCO....Monadnock Building

REPRESENTATIVES:

ST. LOUIS.....Morse Engineering Co., Chemical Building
MINNEAPOLIS.....Strong-Scott Mfg. Co., 413 Third Street, S.
ATLANTA.....Earl F. Scott, M. E., 702 Candler Building

Licensees for Europe: THE WESTINGHOUSE BRAKE CO., Ltd., 32 York Road, Kings Cross, London. N

Locomotive Specialties

Injectors

The Simplex type H-W non-lifting injector is designed to meet the severe service requirements of modern locomotive practice. It is made of few parts, simple in design and easily accessible.

Its self-regulating feature enables it to adapt itself to a great reduction in the operating pressure after it is started without any waste at the overflow. It is also re-starting; if there is an interruption in the water supply, the injector will automatically restart as soon as water is again available. This injector may also be

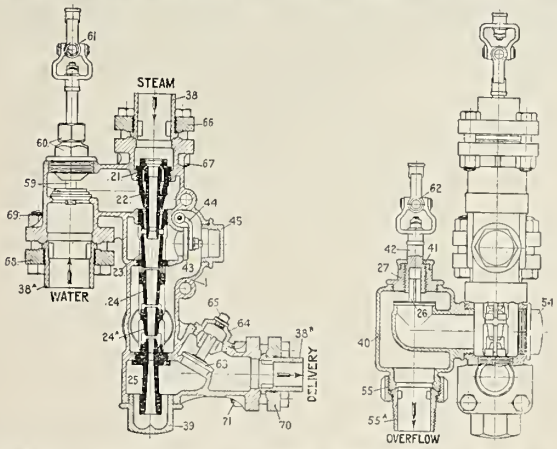

relied upon to start promptly after doing duty as a heater.

The type H-W injector is located below the cab floor thus relieving the congestion in the cab. The operating rods extend through the floor into the cab and are connected to the injector by universal joints.

This injector is made in any capacity required, and it will handle feed water at any temperature up to 125 degrees at 200 lb. pressure.

The Simplex Type R is a lifting injector, rugged in construction and made of the same high grade materials which are used in the type H-W. All parts are accurately machined and fitted and the wearing parts are easily replaced.

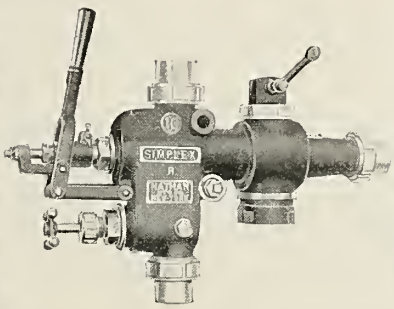

This injector has the same automatic features as the type H-W; it is self-regulating and restarting and will readily start after being used as a heater.

Boiler Check Valves

The Type T double boiler check valve is designed for application to the top of the boiler. It comprises two independent check valves, stop valves and relief plugs. All parts, except the steel flange, are made of a special composition of steam metal. This composition resists wear and gives long service between grindings. A special flange is provided for attaching the valve to the boiler, the surface of which is machined to the radius of the boiler. A ball joint is used between this flange and the valve body, thus eliminating the necessity of perfect alignment. A V-shaped lug is cast on the flange and extends into the boiler. This lug divides the incoming stream of water into two parts, one on either side of the center and eliminates the bad effect of the delivery of a heavy stream in relatively cold water at one point in the boiler.

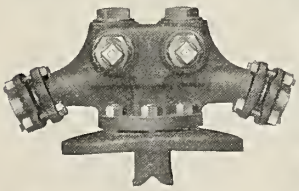

Either or both sides of the check valve may be shut off by merely closing the stop valve. This feature eliminates engine failures due to leaky check valves as, by closing the stop valve, the engineer can either remedy the trouble or cut out one side of the valve.

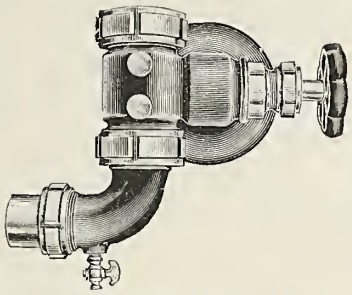

The reversible stop boiler check valve is of the single type for use on the side of the boiler. It is designed so that it may be used on either side of the boiler by merely interchanging the cap on the valve body with the elbow connection to the injector pipe.

A stop valve is provided to shut off the boiler pressure from the check valve, and the valve and seat are removable. These features permit accomplishing any necessary repairs without removing the valve body or even relieving the pressure in the boiler.

Five-feed Bulls-eye Lubricator

This company manufactures several different sizes of force feed or hydrostatic lubricators for oiling the valves and cylinders of locomotive engines and appurtenances. They are made in capacities of three to eight pints and with two to eight feeds.

The body of the five-feed lubricator which is shown in the illustration is a single cylindrical casting with the sight feeds and regulating valves cast integral with and located at the bottom of the lubricator body. An oil pipe extends from an oil channel connecting with the regulating valves, nearly to the top of the reservoir and supplies oil to all of the regulating valves. A water pipe extends from the water valve to the bottom of the oil chamber, transmitting to the oil the pressure due to the head of water in the condenser.

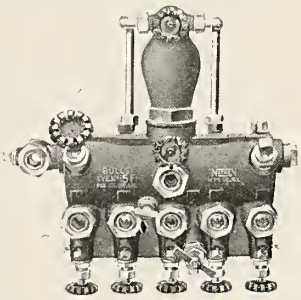

The use of superheated steam sometimes causes the feed of the lubricator to be retarded by the back pressure from the steam chests and under these conditions the valves do not receive sufficient lubrication. To overcome this condition, auxiliary steam pipes known as "Booster Attachments" are connected to the top of the condenser, which provide a current of live steam to the oil pipes ahead of the choke plugs, thus insuring the constant feed of oil to the valves and cylinders of the locomotive.

This lubricator is provided with a cutout valve by the closing of which all the lubricator feeds, except the one going to the air pump, are shut off. This feature enables the lubricator to be shut off when the engine is standing, without the necessity of readjusting the feeds when the engine is again started.

Water Gages

The Reflex water gage is of the Klinger patent type. It consists of a brass body, a frame to support the gage glass, a flat gage glass and two stems which connect the body casting to the gage cocks.

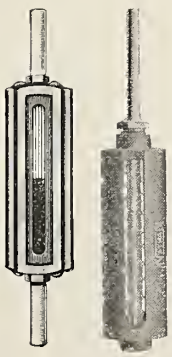

This gage is made in various sizes. The body has threaded connections to the stems. The front of this body casting is open and has a flat finished surface. Against this surface the gage glass forms a joint, which is made steam tight by means of an asbestos gasket. A cap, fitting over the glass, is fastened to the body casting by means of cap screws.

The Delco water gage is of the tubular type. It differs, however, from the ordinary tubular glass in that the glass is under absolutely no strain due to the tightening of the gland nuts.

Locomotive Injectors and Valves

Injectors

This company manufactures many styles of injectors, both lifting and non-lifting. The one illustrated, known as the class K, N-L, is non-lifting, and is designed for locomotives of any capacity. Being located below the cab floor it relieves the congestion in the cab. The operating rods extend through the floor into the cab; they are connected to the injector by universal joints.

All parts of the injector are made of bronze, and are carefully machined and accurately fitted. The steam and water nozzles are of special composition of high wear resisting qualities. All parts subject to wear are easily accessible for replacement, and are made interchangeable.

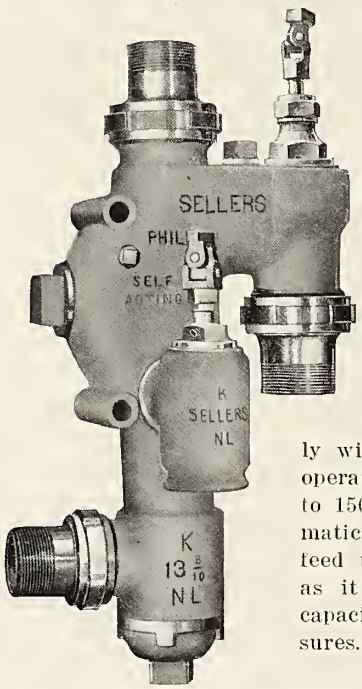

This injector operates from 15 to 250 pounds steam pressure with the same set of tubes, automatically regulating itself to the varying steam pressure without waste at the overflow. It starts quickly and positively with little or no waste, operates with feed water up to 150 degrees, restarts automatically, and can be used to feed the boiler continuously, as it has a wide range of capacities at all steam pressures.

Advantages

The high feed-water temperature which may be handled by this injector results in large economies in coal consumption. The wide range of steam pressure under which it will operate insures against the possibility of low water due to injector failure. The design, workmanship and material entering into its construction, together with the standardization possible in its application, reduce injector maintenance costs to a low figure.

Check Valves

The style G-H check valve is designed for use on locomotive boilers having injector delivery on the top of the boiler. It has two independent stop valves, checks and relief plugs, and the valve seats and other wearing parts are made of a special wear resisting metal that is not susceptible to pitting and gives long service between grindings.

The construction of the valve permits regrinding without relieving the boiler pressure by merely closing the stop valves and removing the check valve cap. This feature also eliminates engine failures due to leaky check-valves or to some foreign matter becoming lodged on the valve seat, as the engineer, by closing the stop valve, can either remedy the trouble or cut out one side of the valve.

This valve is also fitted with a relief plug directly over each check, thus providing means of relieving any pressure existing in the valve after being shut off from the boiler. This feature eliminates the danger of escaping steam or water when removing the valve cap.

The connection of the valve to the boiler is made by an improved ball seat ring provided with an extension

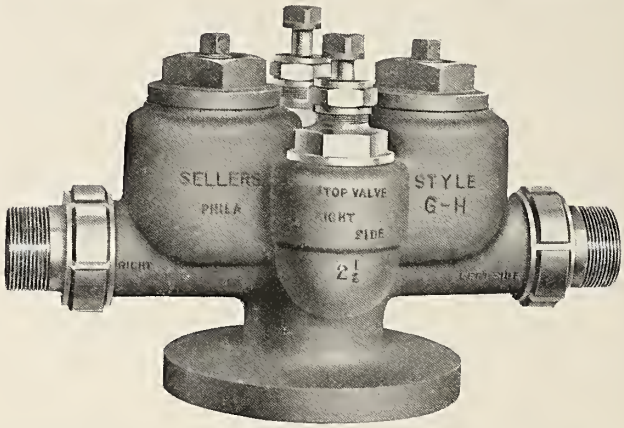

which directs the flow of water laterally as it enters the boiler, preventing contact with the dry pipe. To apply the valve a circular opening of a diameter large enough to admit the ball seat ring extension is made in the top sheet with the edges rounded to form a seat; the valve is placed on the seat ring and held in position with studs through the flange into the boiler which also clamp the ball seat ring tightly to its seat on the boiler.

This improved method of attachment not only eliminates the expense of a boiler flange or saddle, but is much simpler to attach, and remains perfectly tight in service.

Coupling nuts and unions for either iron or copper pipe are supplied on the inlet connections from the injectors.

Coupling Nut

The Sellers Steel-Bronze Coupling Nut consists of a threaded ring of hard bronze provided with the usual internal collar to hold the brazing ring or threaded union. Around this ring, and dove-tailed and keyed to it, is a heavy steel band with eight slots for a spanner wrench; this permits the wrench being applied in any position of the nut, even in close quarters. Inside the steel band are narrow slots which act as lateral keys, and also tie the front and back of the nut together, strengthening the thread.

This nut eliminates many of the weak points and retains all the advantages of the present form of brass nut. It is made in sizes to fit any type of locomotive injector or valve, and may be substituted for screw flanges. It cannot split, crack or strip threads, is not liable to damage by spanner wrench, and is 20 per cent stronger than an all-brass nut.

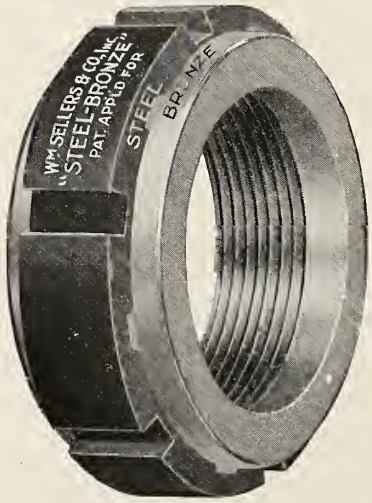

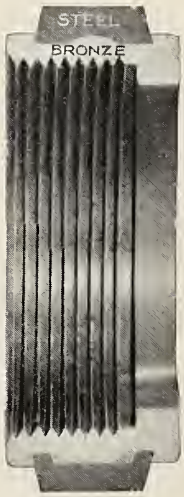

Machine Tools

Boring and Turning Mills

With spur-geared table. Extended back cross-head. Rapid power traverse for heads and slides. No counterweight for heads necessary. Sizes from 60 in. swing up to largest required.

Car Wheel Boring Mills

With automatic mechanical chuck for wheels up to 48 in. diameter. Starting table closes chuck. Stopping table opens chuck. Eliminates all hard labor of chucking and unchucking.

Drilling and Boring Machines

Vertical — Horizontal — Radial, for cylinders, driving-boxes, rods, etc.

Planing Machines

Driven by our well-known spiral gear. Extended back crosshead. Patent feed motion. Power pump insures thorough lubrication of ways. Shifting belt or reversing motor. Sizes from 36 in. x 36 in. up to largest required.

Axle Lathes

Single head with end drive. Double head with centre drive. Axle held securely on heaviest cuts. Positive feeds. Steel rack. Pump and water circulating system.

Slotting Machines

With relief tool aprons—12 in., 16 in., 20 in. stroke. Variable stroke with quick return. Adjustable bearing for slotting bar affords firm backing for tool. *Locomotive Frame Slotters* with two or more heads.

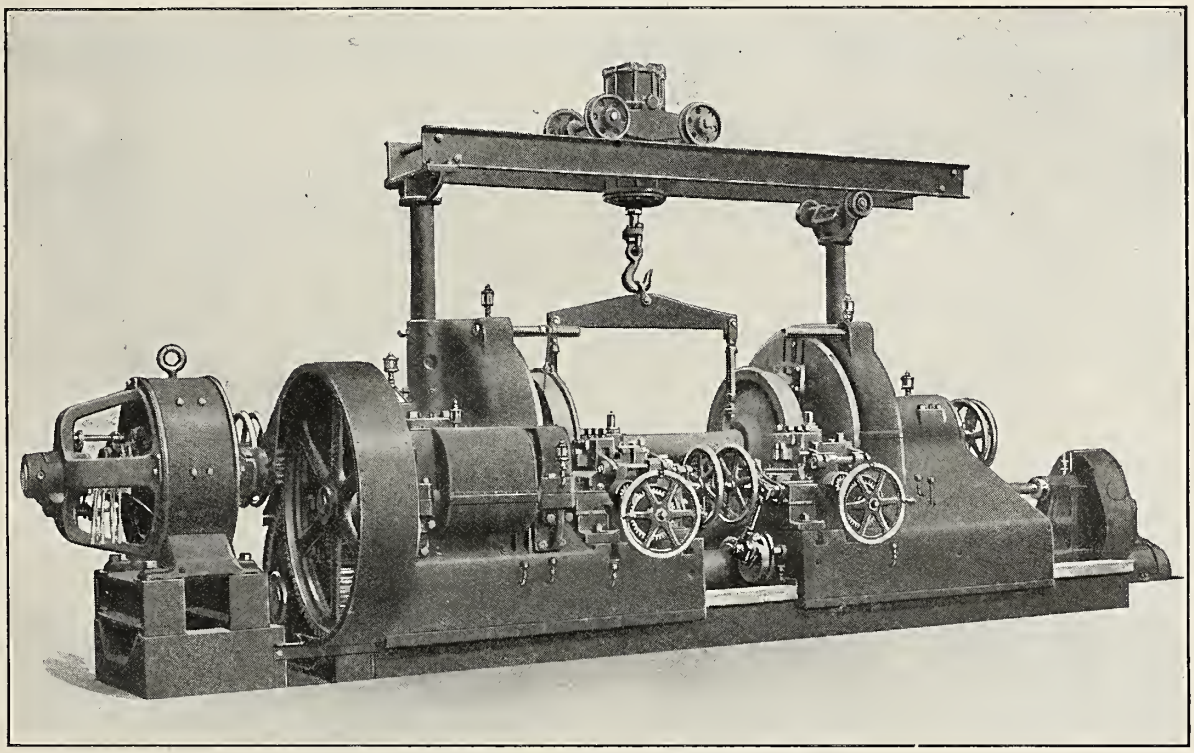

The Sellers Car Wheel Lathe.

Car Wheel Lathes

Extra high power. For steel or steel-tired truck wheels from 26 in. to 42 in. diameter. Do not require openings in wheels for bolts or drivers. Accommodate axles with inside or outside journals, and with gears or armatures between wheels. Turret rests with four tool holders.

Driving Wheel Lathes

Extra high power. Wheels held securely by patent drivers clamped by single set screw with ordinary short wrench. Grip of drivers increases with pressure of cut. Turret rests with four tool holders.

Both the driving wheel and car wheel lathes are unequalled for average daily product under regular shop conditions. Take heaviest cuts tools will stand. All movements quickly and easily made, and time "floor to floor" reduced to minimum.

Tool Grinding and Shaping Machines

That produce and accurately duplicate any desired shapes and angles of cutting tools. Maximum size of tool shank 3 in. x 3 in.

Drill Grinding and Pointing Machines

For all sizes of twist and flat drills from ⅛ in. to 3 in. diameter, inclusive.

Other Products

Power Transmission Machinery: Shafts, Pulleys, Hangers, Couplings, &c., &c., for the economical transmission of power by belts, ropes or gears.

In addition to the machines above this Company manufactures a great variety of machines for use in locomotive or car repair shops.

Bullard Vertical Turret Lathe

Adaptability

The Bullard Vertical Turret Lathe is adapted to a great variety of work in locomotive repair shops. The two tool-carrying turret heads, one main and one side, are universal in their movement and adjustment, without interference, throughout the entire rated range and capacity of the machine. The same tools, excepting reamers and similar cutters, are equally adaptable to the smallest and largest piece of the same class of work, thus keeping the supplementary expense low and minimizing the time required for changing from one class of work to another.

For rod brasses, piston valve parts, etc., the 24-in. Vertical Turret Lathe is particularly applicable. For eccentrics, eccentric straps, pistons, piston packing and cylinder heads, either the 36-in. or 42-in. Vertical Turret Lathe is indicated, according to the range of the work.

Methods of Use

The disposition of the two tool-carrying heads permits the simultaneous machining of contiguous surfaces without interference — boring and facing or facing and turning operations being carried on jointly, thus materially reducing the time required for machining a given piece.

In machining small pieces such as rod brasses or valve bushings, or in machining heavy work such as pistons or packing rings, the joint use of both heads is a distinct advantage which tends largely toward a reduction of machining time as well as the cost thereof.

In machining piston rings both the main head and the side head are continuously employed. In the parting operation the cutting-off tool is fed into a given depth (indicated by observation stops) at which point the ring is separated from the pot by a boring tool held in the main head. No fin is left when this method is employed.

The facing of conical surfaces may be readily accomplished by holding the cutting tool in the side head and, in the upper face of the side head turret, mounting a roll tool which will follow a guide block or bar which is held in one of the main head tool holders—the angular feed being obtained by the action of the roll against the form, as the side head slide is fed inward or outward by the power feed. Proper tension is applied to the side head by the slide binder.

Plain, single pointed, forged tools are economical in upkeep and, in combination with the universal movements of the tool-carrying slides, present great possibilities in the rapid machining of either plain or complicated surfaces. In addition they are at all times readily obtainable.

Combinations of facing and turning tools, secured in the same holder and set to dimensions by size blocks, are frequently possible. Such set-ups require but little time and greatly increase production.

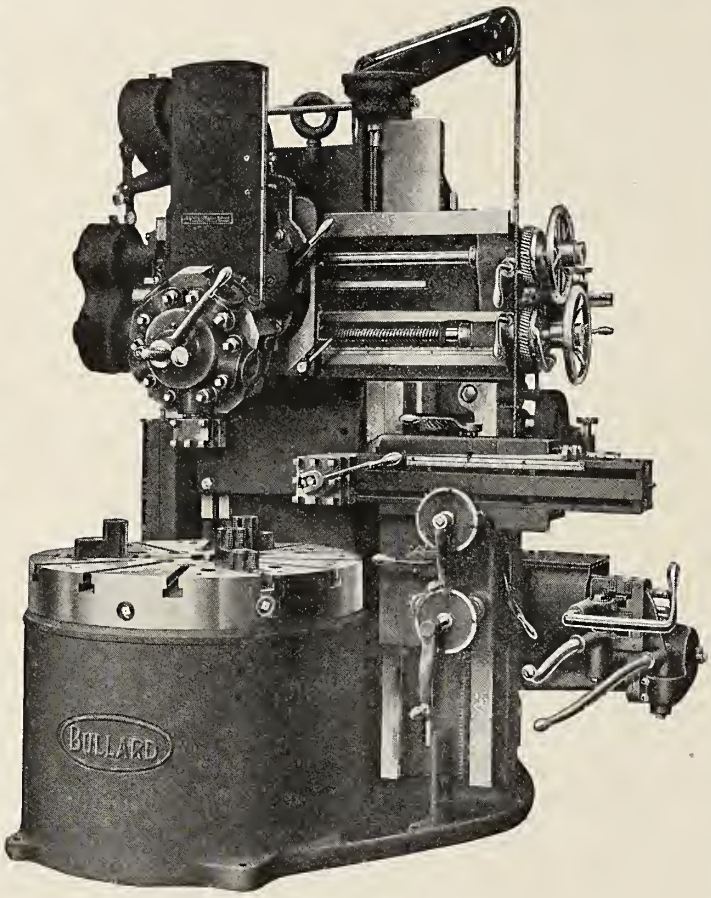

The Vertical Turret Lathe.

Description

The Bullard Vertical Turret Lathe, New Era Type, is built for railway work, in three sizes having rated capacities, respectively, of 24-in., 36-in. and 42-in. In all sizes both main and side heads are usable, either jointly or independently, throughout the actual rated capacity.

The 42-in. Vertical Turret Lathe has a capacity of 44-in. in diameter, 33-in. in height under rail, 25-in. in height under side head slide and 43½-in. clearance between main turret face and table. The table is 42⅜-in. diameter and is supplied with either a 3-Jaw Combination Chuck or a 4-Jaw Independent Chuck built therein. From a constant speed driving pulley 12 selective table speeds, ranging from 3.3 to 56 revolutions per minute are mechanically obtained by a means of two series of sliding gears and positive clutches—a highly efficient multiple disc clutch is interposed between driving pulley and speed change mechanism—which, in combination with a quick-acting brake gives a positive as well as a sensitive control of table motion. Eight positive and independent feed changes are provided for each head, ranging from .0113-in. to .500-in. per revolution of the table. The main head has a vertical movement of 27 in., will face 44 in. in diameter, and has a movement of 3 in. beyond the center—a center stop is provided. The main turret is 16¾ in. diameter and has 5 faces having 2¾-in. holes therein. The side head has a vertical movement of 28 in., a horizontal movement of 21 in., and is equipped with a 4-faced turret tool holder. Tools for both main and side head may be made of 1½-in. by 1¼-in. stock.

Main head may be equipped with Thread Cutting or Compound Feeding attachment. A taper turning attachment may also be applied to the side head. An efficient cutting lubricant system which practically protects the floor and the operator has been developed for these machines and is recommended in connection with all steel work.

The main driving pulley runs at 360 r.p.m. and may be driven either through countershaft from main line or by motor which is mounted upon the machine. A 15 h.p. motor is recommended for average work. The 42-in. Vertical Turret Lathe weighs 18,500 pounds net and occupies a floor space 93 in. wide by 85 in. deep and requires 122 in. maximum height from floor.

Bullard Vertical Turret Lathe

Structural Details

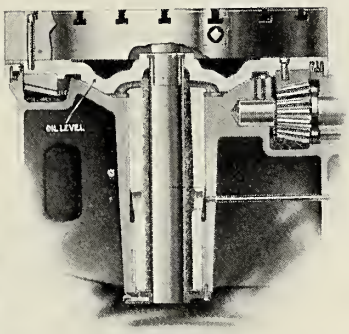

Table Spindle.

The table, or face plate, spindle is of large diameter, has a large self-centering conical thrust bearing and thus provides a rigid support for the work. Under ordinary working conditions the pressure on spindle thrust bearing does not exceed 15 pounds per square inch, and, as all spindle-bearing surfaces are immersed in a bath of oil, the wear therein is negligible.

The table is driven through bevel gearing having a special tooth form which has a rotative effect only. Table gear is generated from a rolled alloy steel forging heat treated to obtain maximum strength and wearing qualities. The driving pinion is of hardened steel and is at all times immersed in oil.

Secondary Speed Change.

The speed change mechanism consists of two units, primary and secondary, rigidly mounted in the column of the machine. Shafts are alloy steel, heat treated for the service required, and the gearing is of the highest obtainable quality of chrome nickel steel which is subjected to a series of heat treatments which develop wear and shock-resistive qualities to the maximum.

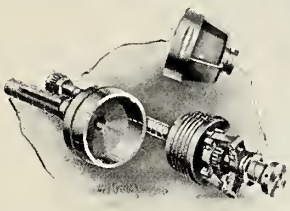

Clutch and Brake Drum.

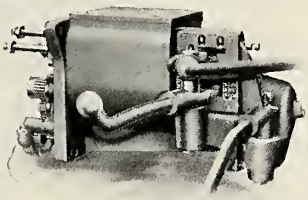

Primary Speed Case.

The multiple disc clutch is interposed between the first-motion driving shaft and the speed change mechanism, and, therefore, has a constant power efficiency as does also the quick-acting brake which forms an integral part of the clutch mechanism.

All bearings and gears are continuously immersed in oil supplied by a central continuous-flow lubricating system, the oil being in continuous circulation while the driving pulley is in motion. This system of lubrication ensures long life of parts and, at the same time, enables the operator to apply his entire attention to production in the sure knowledge that the machine is efficiently and continuously lubricated.

Main and side heads are mounted upon individual rails which are in turn securely fastened to the bed or column. The rails provide a maximum bearing and supporting area to absorb the strains set up in cutting operations. Both heads have a movement, either by hand or power, throughout the full rated capacity of the machine. The main head, mounted in a swivelling saddle, may be adjusted for taper boring or turning to any angle within 45° either side of the vertical center.

Feed works gears are of steel and run continuously in oil. A safety device incorporated in the feed works obviates delays through breakage resulting from carelessness in manipulation.

Advantages

The advantage of vertical chucking is obvious. The horizontal table of the vertical type presents a surface upon which the work may be set up, leveled and trued without preliminary strapping—gravity serving as an aid rather than a hindrance. Work which is irregular in form or relatively heavy may be properly chucked and secured to the horizontal table of the vertical machine, and cuts finished in less time than is often required in chucking alone on the horizontal type.

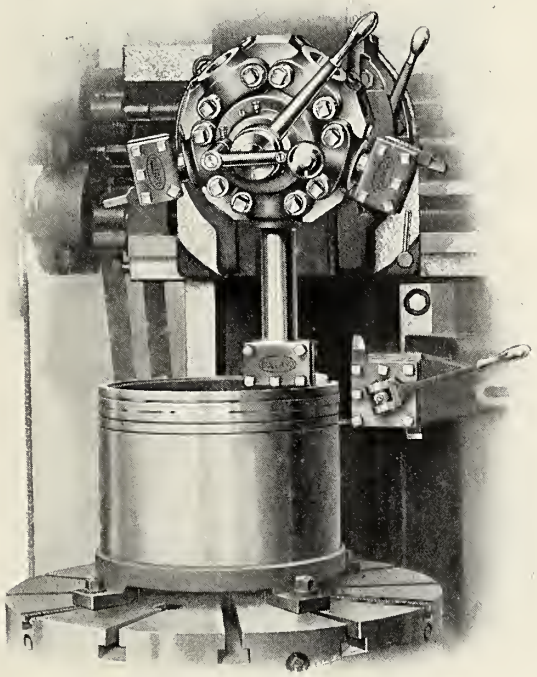

Machining Piston Packing.

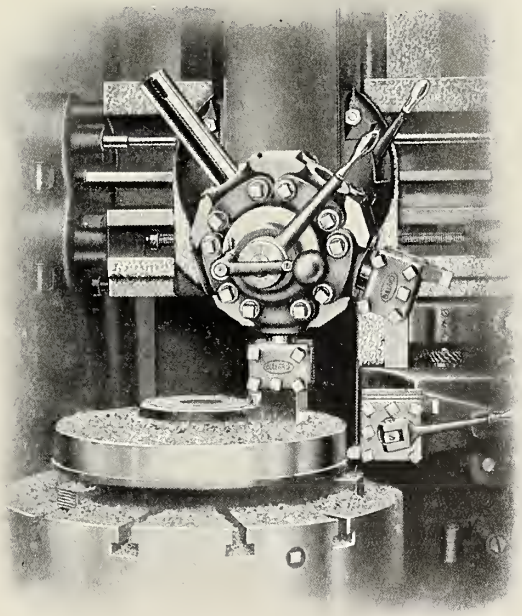

"Multi-Cutting" Saves Time.

The bearing surfaces are immeasurably greater than in the horizontal type, insuring a more permanent alignment and in addition the overhanging feature of both chuck and work is eliminated.

The floor space occupied by the vertical machine is about one-half of that required for the horizontal type of equal capacity.

Tools for Locomotive Repair Shops

Portable Cylinder Boring Bars

The portable cylinder boring bar is designed to rebore all sizes of locomotive cylinders and valve ports. It is so constructed that the cylinder being bored serves as a support for the bar; all that is necessary is to take off the cylinder head and remove the piston. This saves

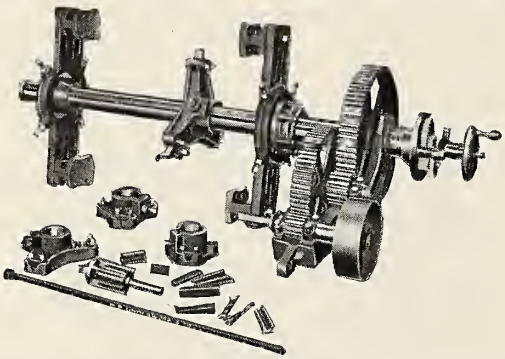

breaking the steam joints and bolts, and setting up in a boring machine, and the cylinder can be rebored in less time than it would take to remove it from the locomotive.

The cutter heads are fed by a steel screw, which is inserted in a slot on one side of the bar. It has square threads and is fitted with an improved bronze thrust bearing and steel feed nut. The bar is made with an open feed casing and has two changes of feed. The feed is constant and can be thrown in or out at the will of the operator. The bar is driven through a train of cut gears, by either hand or belt power, or may be arranged for an air or electric motor if desired. A heavy centering chuck fits into the stuffing box and supports the bar in a central position. The chuck is furnished with several sets of taper gibs to fit different diameter stuffing boxes. If both heads are off, two cross-heads and bearings are used to support the bar. This boring bar is suitable for boring all types of cylinders either vertical or horizontal.

Valve Seat Rotary Planer

This valve seat rotary planer is built in seven sizes and is designed to face off the valve seat of slide valve locomotives and has a capacity of 20 in. to 42 in. across corners. It is heavily and rigidly built and will easily plane as heavy a cut as is required in this work

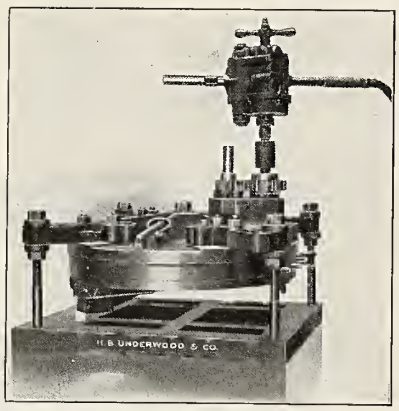

It is driven by an air motor and has two changes of speed. These speeds are easily obtained by shifting the motor to either shaft. The tool post is strong and carries an inch-square tool.

Portable Crank Pin Turning Machine

The portable crank pin turning machine is designed for truing up crank pins. It is set up so as to give the original alignment to the pin. The work is always in full view of the operator and the finish is true, smooth and accurate.

Four set screws passing through the cutterhead center the machine in the same manner as a lathe chuck. The machine has a center which fits into the original center of the pin. Any desired feed of the cutterhead along the bed can be obtained, as the feed mechanism is variable and reversible. The driving mechanism runs

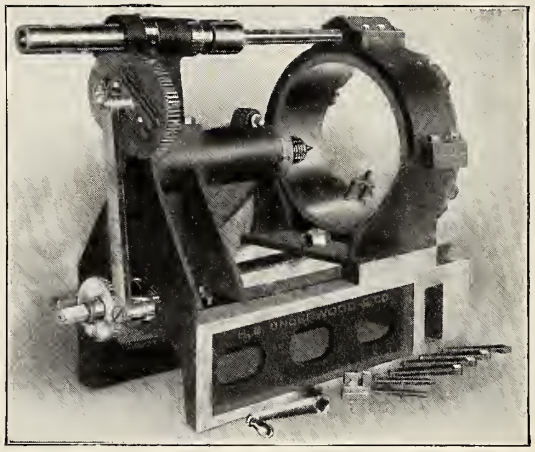

in oil in a dust-proof housing. The cutting tools, small pieces of square stock, are firmly held in the holder and cut slightly back of the center.

Rotary Flue Cleaning Machine

The rotary flue cleaning machine is designed for removing the hard scale from boiler tubes. Very little power is required and the machine may be operated by a laborer who feeds the flues to it one at a time; they drop out cleaned at the other end. It will clean eight to ten feet a minute without injuring them in any way.

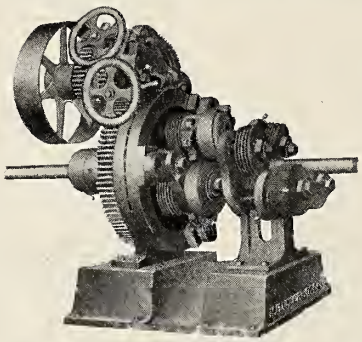

Three revolving shafts, set obliquely in adjustable boxes and provided with circular blunt edge steel cutters, are connected with a movable ring, governed by a worm screw, which is operated by the lower hand wheel. Each of these cutters is provided with a small adjustable circular cutter with cross teeth, which cuts the scale lengthwise after it has been cut crosswise by the circular cutting plates on the revolving shafts. The same process is repeated by the finishing cutters which are revolved by the flue, two of them having the teeth cut lengthwise and two crosswise. By having the circular cutters on the revolving shafts on the same incline plane, the first and second cutters on each shaft will not come in contact with the flue, but will afford easy entrance, acting as a mill and preventing the machine from choking.

Other Products

In addition to the devices described above this company also manufactures the following special tools: Circular planer tool, locomotive cylinder and dome facing machine, radius planer attachment, portable milling machine, truck side frame facing machine, universal boring, turning and facing machine, portable and stationary air and motor-driven pipe bending machines, armature and axle bearing boring machine, reflex water glass grinders.

ALPHABETICAL INDEX OF ADVERTISERS

A

American Arch Co.....934-935
American Brake Co..... 981
American Brake Shoe & Foundry Co.... 978
American Locomotive Co.....918 to 921
American Steel Foundries..... 949

B

Baldwin Loco. Works, The...922 to 927, 974, 976
Buffalo Brake Beam Co..... 978
Bullard Machine Tool Co.....960-961

C

Chambers Valve Co..... 942
Chambersburg Engineering Co..... 986
Chicago Railway Equipment Co..... 985
Columbia Nut & Bolt Co., Inc..... 980
Commonwealth Steel Co..... 983

E

Economy Devices Corporation.....911 to 917

F

Flannery & Co., J. Rogers..... 953
Flannery Bolt Co..... 953

G

General Electric Co.....932-933
Gould Coupler Co..... 950

H

Hunt & Co., Robert W..... 982
Hunt-Spiller Manfg. Corp..... 984

J

Jacobs-Shupert U. S. Firebox Co..... 931
Jerome-Edwards Metallic Packing Co... 980

L

Landis Machine Co., Inc..... 988
Lima Locomotive Corporation.....928 to 930
Locomotive Finished Material Co..... 939
Locomotive Superheater Co.....936 to 938

M

Manning, Maxwell & Moore, Inc..... 991
Mason Regulator Co..... 983
McConway & Torley Co..... 948
McCord & Company..... 980
Miner, W. H..... 973
Morse Chain Co..... 956

N

Nathan Mfg. Co..... 957
National Malleable Castings Co..... 986
Niles-Bement-Pond Co..... 989

O

Ohio Injector Co..... 978

P

Parkesburg Iron Co..... 984
Pilliod Company, The.....940-941
Pittsburgh Loco. Power Reverse Gear Co.. 984
Pratt & Letchworth Co..... 952
Pratt & Whitney Co..... 988
Pressed Steel Car Co..... 982
Pyle-National Electric Headlight Co....944-945

Q

Q & C Co..... 955

R

Railway Steel-Spring Co..... 987
Ryerson & Son, Jos. T..... 988

S

Schroeder Headlight Co..... 943
Scully Steel & Iron Co..... 986
Sellers & Co., Inc., Wm.....958-959
Simplex Railway Appliance Co.
See American Steel Foundries
Standard Car Truck Co..... 951
Standard Steel Works Co.....946-947

U

Underwood & Co., H. B..... 962
Union Steel Casting Co..... 982
U. S. Metallic Packing Co..... 983

W

Watertown Specialty Co..... 954
Watson-Stillman Co., The..... 990
Westinghouse Air Brake Co..... 979
Westinghouse Electric & Mfg. Co.....974 to 977

BUYERS' CLASSIFIED DIRECTORY

FOR the immediate convenience of the users of this Dictionary a very complete classification of supplies used in locomotive building and maintenance appears on this and the following pages. It includes not only the names of the manufacturers represented in the Catalogue and Advertising Sections but also their page numbers and the figure numbers in all sections of the Dictionary.

AIR BRAKES.

American Brake Co.
Page 981; also Figs. 1554; 1556 to 1589.

Westinghouse Air Brake Co.
Page 979; also Figs. 1399 to 1484.

AIR PUMP GOVERNORS.

Mason Regulator Co.
Page 983; also Figs. 1610, 1611.

Westinghouse Air Brake Co.
Page 979; also Figs. 1422 to 1424.

AIR SIGNAL APPARATUS.

Westinghouse Air Brake Co.
Page 979; also Figs. 1408; 1478 to 1484.

ANVILS.

Scully Steel & Iron Co.
Page 986.

ARCHES, BRICK.

American Arch Co.
Catalogue Section pp. 934-35; also Figs. 275 to 280.

ARCH PIPE, LOCOMOTIVE.

Parkesburg Iron Co.
Page 984.

AXLES.

American Locomotive Co.
Catalogue Section pp. 918 to 921.

Baldwin Locomotive Works, The
Catalogue Section pp. 922 to 927; also Figs. 908, 911.

Gould Coupler Co.
Catalogue Section p. 950.

Standard Steel Works Co.
Catalogue Section pp. 946-47; also Fig. 912.

BATTERY CHARGING SETS.

Westinghouse Electric & Mfg. Co.
Pages 974 to 977.

BEARINGS, CENTER.

National Malleable Castings Co.
Page 986.

Standard Car Truck Co.
Catalogue Section p. 951; also Fig. 1959.

BEARINGS, SIDE.

American Steel Foundries.
Catalogue Section p. 949; also Figs. 1947, 1948.

Chicago Railway Equipment Co.
Page 985; also Figs. 1955, 1956.

Miner, W. H.
Page 973; also Fig. 1952.

National Malleable Castings Co.
Page 986.

Standard Car Truck Co.
Catalogue Section p. 951; also Fig. 1950.

BELL RINGERS, PNEUMATIC.

U. S. Metallic Packing Co.
Page 983; also Figs. 1665, 1666.

BLOWERS.

Scully Steel & Iron Co.
Page 986.

BOILERS.

American Locomotive Co.
Catalogue Section pp. 918 to 921; also Figs. 150, 153, 154, 157, 171, 172; 182 to 184; 186, 188.

Baldwin Locomotive Works, The.
Catalogue Section pp. 922 to 927, and pp. 974, 976; also Figs. 151, 156, 158; 168 to 170; 176, 177, 185, 187.

Lima Locomotive Corp.
Catalogue Section pp. 928 to 930; also Figs. 146, 155, 163, 178.

BOILER PLATES.

Ryerson & Son, Jos. T.
Page 988.

Scully Steel & Iron Co.,
Page 986.

BOILER TUBES.

(See Tubes, Boiler.)

BOILER WASHERS, FILLERS AND TESTERS.

Manning, Maxwell & Moore, Inc.,
Page 991.

Nathan Mfg. Co.
Catalogue Section p. 957; also Fig. 1393.

Ohio Injector Co.
Page 978; also Fig. 1391.

Sellers & Co., Inc., Wm.
Catalogue Section pp. 958-59; also Figs. 1397, 1398.

BOLSTERS.

American Steel Foundries.
Catalogue Section p. 949; also Figs. 1933 to 1948.

Chicago Railway Equipment Co.
Page 985; also Figs. 1943, 1944.

Commonwealth Steel Co.,
Page 983.

Gould Coupler Co.
Catalogue Section p. 950; also Fig. 1942.

Pressed Steel Car Co.
Page 982.

BOLTS AND NUTS.

Columbia Nut & Bolt Co., Inc.
Page 980.

Ryerson & Son, Jos. T.
Page 988.

Scully Steel & Iron Co.
Page 986.

BOLT CUTTING AND THREADING MACHINERY.

Landis Machine Co.
Page 988; also Figs. 2354 to 2356; 2359.

Scully Steel & Iron Co.
Page 986.

Sellers & Co., Inc., Wm.
Catalogue Section pp. 958-59.

BORING BARS.

Ryerson & Son, Jos. T.
Page 988; also Fig. 2521.

Sellers & Co., Inc., Wm.
Catalogue Section pp. 958-59.

Underwood & Co., H. B.
Catalogue Section p. 962; also Fig. 2520.

BORING MACHINES.

Manning, Maxwell & Moore, Inc.
Page 991.

Niles-Bement-Pond Co.
Page 989; also Figs. 2374, 2377, 2511.

Sellers & Co., Inc., Wm.
Catalogue Section pp. 958-59; also Figs. 2376, 2378.

Underwood & Co., H. B.
Catalogue Section p. 962.

BORING AND TURNING MILLS.

Bullard Machine Tool Co.
Catalogue Section pp. 960-61; also Figs. 2363, 2364.

Manning, Maxwell & Moore, Inc.
Page 991; also Fig. 2372.

Niles-Bement-Pond Co.
Page 989; also Figs. 2365, 2366.

Sellers & Co., Inc., Wm.
Catalogue Section pp. 958-59; also Figs. 2367, 2370.

BRAKES, AIR.

(See Air Brakes.)

BRAKES, DRIVER.

American Brake Co.
Page 981; also Figs. 1554, 1558, 1559.

BRAKE BEAMS.

American Steel Foundries.
Catalogue Section p. 949; also Figs. 1977, 1978.

Buffalo Brake Beam Co.
Page 978; also Figs. 1989 to 1991.

Chicago Railway Equipment Co.
Page 985; also Figs. 1960 to 1975.

National Malleable Castings Co.
Page 986.

Pressed Steel Car Co.
Page 982.

BRAKE BEAM SAFETY GUARDS.
American Steel Foundries.
Catalogue Section p. 949.

BRAKE GEAR.
American Brake Co.
Page 981.

National Malleable Castings Co.
Page 986; also Figs. 1583 to 1604; 1987, 1988.

BRAKE GEAR, CLASP.
American Brake Co.
Page 981.

BRAKE HEADS.
American Brake Shoe & Foundry Co.
Page 978.

Buffalo Brake Beam Co.
Page 978; also Figs. 1990, 1991.

Chicago Railway Equipment Co.
Page 985; also Figs. 1968; 1970 to 1975.

National Malleable Castings Co.
Page 986.

BRAKE HEADS, DRIVER.
American Brake Shoe & Foundry Co.
Page 978; also Figs. 1630 to 1632.

BRAKE SHOES.
American Brake Shoe & Foundry Co.
Page 978; also Figs. 1620 to 1623.

BRAKE SHOES, DRIVER.
American Brake Shoe & Foundry Co.
Page 978; also Figs. 1624 to 1629.

BRAKE SHOE KEYS.
American Brake Shoe & Foundry Co.
Page 978.

National Malleable Castings Co.
Page 986; also Fig. 1594.

BRAKE SHOE KEYS, DRIVER.
American Brake Shoe & Foundry Co.
Page 978.

BRAKE SLACK ADJUSTERS.
American Brake Co.
Page 981; also Fig. 1561.

Chicago Railway Equipment Co.
Page 985.

Gould Coupler Co.
Catalogue Section p. 950.

National Malleable Castings Co.
Page 986.

BRICK ARCHES.
(See Arches, Brick)

BUFFERS.
Commonwealth Steel Co.
Page 983; also Fig. 1069.

Economy Devices Corporation.
Catalogue Section pp. 911 to 917; also Fig. 1896.

Gould Coupler Co.
Catalogue Section p. 950; also Fig. 1059.

McConway & Torley Co.
Catalogue Section p. 948.

National Malleable Castings Co.
Page 986; also Fig. 1093.

Westinghouse Air Brake Co.
Page 979.

BULLDOZERS.
Chambersburg Engineering Co.
Page 986.

Ryerson & Son, Jos. T.
Page 988.

Scully Steel & Iron Co.
Page 986.

Watson-Stillman Co.
Page 990.

BUSHINGS, CYLINDER AND VALVE CHAMBER.
Locomotive Finished Material Co.
Catalogue Section p. 939.

CARS, GAS-ELECTRIC.
General Electric Co.
Catalogue Section pp. 932-33; also Figs. 2232, 2235, 2236.

CASTINGS, IRON AND STEEL.
(See Forgings and Castings.)

CENTER PLATES.
Pressed Steel Car Co.
Page 982.

Standard Car Truck Co.
Catalogue Section p. 951.

CENTER SILLS.
Miner, W. H.
Page 973.

CENTERING DEVICES, COUPLER.
Miner, W. H.
Page 973.

National Malleable Castings Co.
Page 986.

CHAINS.
Scully Steel & Iron Co.
Page 986.

CHAINS, TRANSMISSION.
Morse Chain Co.
Catalogue Section p. 956.

CIRCULATION SYSTEMS, WATER.
(See Water Circulation Systems.)

CLAMPS, FLANGING.
Niles-Bement-Pond Co.
Page 989; also Fig. 2380.

Ryerson & Son, Jos. T.
Page 988; also Fig. 2379.

Scully Steel & Iron Co.
Page 986.

COAL PICKS.
National Malleable Castings Co.
Page 986; also Fig. 2334.

COAL SPRINKLERS.
Manning, Maxwell & Moore, Inc.
Page 991; also Fig. 1209.

Nathan Mfg. Co.
Catalogue Section p. 957; also Fig. 1208.

Ohio Injector Co.
Page 978; also Fig. 1211.

Sellers & Co., Inc., Wm.
Catalogue Section pp. 958-59; also Fig. 1207.

COMBUSTION CHAMBER, FIREBOX.
American Arch Co.
Catalogue Section pp. 934-35; also Figs. 278 to 280.

COMPRESSORS, AIR (SHOP).
Scully Steel & Iron Co.
Page 986.

COMPRESSORS, AIR BRAKE.
General Electric Co.
Catalogue Section pp. 932-33; also Fig. 2229.

Westinghouse Air Brake Co.
Page 979; also Figs. 1412 to 1416; 1456 to 1458.

CONNECTORS, AUTOMATIC.
Westinghouse Air Brake Co.
Page 979; also Figs. 2094 to 2096.

CONTROLLERS.
General Electric Co.
Catalogue Section pp. 932-33; also Fig. 2224.

Westinghouse Electric & Mfg. Co.
Pages 974 to 977; also Figs. 2207, 2208.

COTTER PINS.
Columbia Nut & Bolt Co., Inc.
Page 980.

COUPLERS AND COUPLER POCKETS.
American Steel Foundries.
Catalogue Section p. 949; also Figs. 1080; 1897 to 1900.

Gould Coupler Co.
Catalogue Section p. 950; also Figs. 1082, 1083.

McConway & Torley Co.
Catalogue Section p. 948; also Figs. 1074 to 1077; 1903.

National Malleable Castings Co.
Page 986; also Figs. 1084 to 1096.

COUPLER SHEARS AND RIVETERS.
Watson-Stillman Co.
Page 990; also Fig. 2513.

COUPLING NUTS.
Sellers & Co., Inc., Wm.
Catalogue Section pp. 958-59.

CRANES.
Chambersburg Engineering Co.
Page 986.

Manning, Maxwell & Moore, Inc.
Page 991.

Niles-Bement-Pond Co.
Page 989.

Sellers & Co., Inc., Wm.
Catalogue Section pp. 958-59.

CRANES, BATTERY TRUCK.
General Electric Co.
Catalogue Section pp. 932-33.

CRANK PIN TURNING AND TRUING MACHINES.
Ryerson & Son, Jos. T.
Page 988; also Fig. 2518.

Underwood & Co., H. B.
Catalogue Section p. 962; also Fig. 2516.

CRUSHER ROLLS AND SHELLS.
Standard Steel Works Co.
Catalogue Section pp. 946-47.

CYLINDERS.
American Locomotive Co.
Catalogue Section pp. 918 to 921; also Figs. 575, 576, 578, 579; 584 to 586; 590, 591, 593.

Baldwin Locomotive Works, The.
Catalogue Section pp. 922 to 927; and pp. 974, 976; also Figs. 574, 577; 587 to 589; 592.

Locomotive Finished Material Co.
Catalogue Section p. 939.

CYLINDER COCKS.
Manning, Maxwell & Moore, Inc.
Page 991; also Figs. 636 to 638.

Nathan Mfg. Co.
Catalogue Section p. 957; also Fig. 635.

Watertown Specialty Co.
Catalogue Section p. 954; also Fig. 641.

CYLINDER FACING MACHINES.
Underwood & Co., H. B.
Catalogue Section p. 962; also Fig. 2519.

DIES.

Chambersburg Engineering Co.
Page 986.

Landis Machine Co.
Page 988.

Scully Steel & Iron Co.
Page 986.

DIE HEADS.

Landis Machine Co.
Page 988.

DRAFT GEARS AND ATTACHMENTS.

American Steel Foundries.
Catalogue Section p. 949.

Commonwealth Steel Co.
Page 983; also Fig. 1066.

Gould Coupler Co.
Catalogue Section p. 950; also Figs. 1059, 1083; 1866 to 1870.

McCord & Co.
Page 980; also Figs. 1880 to 1883.

Miner, W. H.
Page 973; also Figs. 1864, 1865.

National Malleable Castings Co.
Page 986; also Figs. 1890 to 1894.

Westinghouse Air Brake Co.
Page 979; also Figs. 1857, 1858.

DRAIN FITTINGS, BLOWER PIPE.

Watertown Specialty Co.
Catalogue Section p. 954; also Fig. 383.

DRILLING MACHINERY.

Niles-Bement-Pond Co.
Page 989; also Figs. 2385, 2386, 2393, 2511.

Pratt & Whitney Co.
Page 988.

Ryerson & Son., Jos. T.
Page 988; also Fig. 2391.

Scully Steel & Iron Co.
Page 986.

Sellers & Co., Inc., Wm.
Catalogue Section pp. 958-59; also Fig. 2389.

DRILLS.

Pratt & Whitney Co.
Page 988.

Scully Steel & Iron Co.
Page 986.

DRIVING BOXES.

Economy Devices Corporation.
Catalogue Section pp. 911 to 917; also Fig. 923.

EJECTORS.

Manning, Maxwell & Moore, Inc.
Page 991; also Fig. 1209.

Nathan Mfg. Co.
Catalogue Section p. 957; also Fig. 1208.

Ohio Injector Co.
Page 978; also Figs. 1211, 1212.

ELECTRIC EQUIPMENT.

General Electric Co.
Catalogue Section pp. 932-33; also Figs. 2223 to 2229.

Westinghouse Electric & Mfg. Co.
Pages 974 to 977; also Figs. 2203 to 2222; 2237, 2238.

END SILLS.

Commonwealth Steel Co.
Page 983; also Figs. 1779, 1780.

Gould Coupler Co.
Catalogue Section p. 950.

ENGINEERS, INSPECTING AND TESTING.

Hunt & Co., Robert W.
Page 982.

EXHAUST NOZZLES.

Economy Devices Corporation.
Catalogue Section pp. 911 to 917; also Fig. 399.

EXPANDERS, TUBE.

Ryerson & Son, Jos. T.
Page 988; also Figs. 2398, 2400.

Scully Steel & Iron Co.
Page 986.

Watson-Stillman Co.
Page 990.

FIRE EXTINGUISHERS.

Nathan Mfg. Co.
Catalogue Section p. 957; also Fig. 1396.

Ohio Injector Co.
Page 978; also Fig. 1394.

Sellers & Co., Inc., Wm.
Catalogue Section pp. 958-59; also Fig. 1397.

FIREBOXES, LOCOMOTIVE.

Jacobs-Shupert U. S. Firebox Co.
Catalogue Section p. 931; also Figs. 193 to 196.

FLANGERS, SNOW.

Q & C Company.
Catalogue Section p. 955; also Figs. 1097 to 1099; 1101.

FLANGES, PIPE.

Chambersburg Engineering Co.
Page 986.

Scully Steel & Iron Co.
Page 986.

Standard Steel Works Co.
Catalogue Section pp. 946-47.

FLANGING MACHINES.

(See Clamps, Flanging.)

FLEXIBLE STAYBOLTS.

(See Staybolts, Flexible.)

FLUE MACHINERY.

Ryerson & Son, Jos. T.
Page 988; also Figs. 2395, 2396; 2398 to 2400.

Scully Steel & Iron Co.
Page 986.

Underwood & Co., H. B.
Catalogue Section p. 962; also Fig. 2391.

FORGINGS AND CASTINGS.

American Brake Co.
Page 981.

American Brake Shoe & Foundry Co.
Page 978.

American Locomotive Co.
Catalogue Section p. 918 to 921.

American Steel Foundries.
Catalogue Section p. 949.

Baldwin Locomotive Works, The.
Catalogue Section pp. 992 to 927; also pp. 974, 976.

Buffalo Brake Beam Co.
Page 978.

Commonwealth Steel Co.
Page 983.

Gould Coupler Co.
Catalogue Section p. 950.

Hunt-Spiller Mfg. Corp.
Page 984.

Lima Locomotive Corp.
Catalogue Section pp. 928 to 930.

McConway & Torley Co.
Catalogue Section p. 948.

National Malleable Castings Co.
Page 986.

FORGINGS AND CASTINGS—Continued.

Pratt & Letchworth Co.
Catalogue Section p. 952.

Pressed Steel Car Co.
Page 982.

Scully Steel & Iron Co.
Page 986.

Standard Steel Works Co.
Catalogue Section pp. 946-47.

Union Steel Casting Co.
Page 982.

FORGING MACHINES.

Ryerson & Son, Jos. T.
Page 988.

Scully Steel & Iron Co.
Page 986.

Watson-Stillman Co.
Page 990.

FRAMES, LOCOMOTIVE.

Pratt & Letchworth Co.
Catalogue Section p. 952.

Union Steel Casting Co.
Page 982.

FURNACES, ELECTRIC.

General Electric Co.
Catalogue Section pp. 932-33.

FURNACES, LOCOMOTIVE.

American Arch Co.
Catalogue Section pp. 934-35; also Figs. 275 to 280.

FURNACES, SHOP.

Chambersburg Engineering Co.
Page 986.

Ryerson & Son, Jos. T.
Page 988.

Scully Steel & Iron Co.
Page 986.

GAGES, AIR AND STEAM.

Manning, Maxwell & Moore, Inc.
Page 991; also Fig. 1186.

Westinghouse Air Brake Co.
Page 979; also Figs. 1437 to 1440.

GAGES, HYDRAULIC.

Watson-Stillman Co.
Page 990.

GAGES, STANDARD MEASURING.

Pratt & Whitney Co.
Page 988.

GAGES, STEAM HEAT.

Manning, Maxwell & Moore, Inc.
Page 991.

GAGES, WATER.

Manning, Maxwell & Moore, Inc.
Page 991.

Nathan Mfg. Co.
Catalogue Section p. 957; also Fig. 1174.

GAGE COCKS.

Manning, Maxwell & Moore, Inc.
Page 991; also Fig. 1190.

Nathan Mfg. Co.
Catalogue Section p. 957; also Fig. 1185.

GASKETS.

Scully Steel & Iron Co.
Page 986.

GEAR BLANKS.

Standard Steel Works Co.
Catalogue Section pp. 946-47.

GENERATORS.

General Electric Co.
Catalogue Section pp. 932-33.

Westinghouse Electric & Mfg. Co.
Pages 974 to 977.

GOVERNORS, AIR PUMP.

(See Air Pump Governors.)

GRINDING MACHINES.

Pratt & Whitney Co.
Page 988.

Ryerson & Son, Jos. T.
Page 988.

Sellers & Co., Inc., Wm.
Catalogue Section pp. 958-59.

Underwood & Co., H. B.
Catalogue Section p. 962.

HAMMERS, POWER.

Chambersburg Engineering Co.
Page 986; also Figs. 2420, 2422, 2425.

Niles-Bement-Pond Co.
Page 989; also Figs. 2418, 2419.

Ryerson & Son, Jos. T.
Page 988; also Fig. 2421.

Scully Steel & Iron Co.
Page 986.

Sellers & Co., Inc., Wm.
Catalogue Section pp. 958-59.

HEADLIGHTS, ELECTRIC.

General Electric Co.
Catalogue Section pp. 932-33.

Pyle-National Electric Headlight Co.
Catalogue Section pp. 944-45; also Figs. 1689 to 1695.

Schroeder Headlight Co.
Catalogue Section p. 943; also Figs. 1701, 1702, 1704.

HOISTS AND HOISTING MACHINERY.

Chambersburg Engineering Co.
Page 986.

Manning, Maxwell & Moore, Inc.
Page 991.

Niles-Bement-Pond Co.
Page 989.

Scully Steel & Iron Co.
Page 986.

Sellers & Co., Inc., Wm.
Catalogue Section pp. 958-59.

HOSE, SQUIRT.

Watertown Specialty Co.
Catalogue Section p. 954.

HOSE COUPLINGS, AIR AND STEAM.

Scully Steel & Iron Co.
Page 986.

Westinghouse Air Brake Co.
Page 979; also Figs. 1472, 1474.

HOSE PROTECTORS.

McCord & Co.
Page 980.

Q & C Company.
Catalogue Section p. 955.

INDICATORS, CYLINDER.

Manning, Maxwell & Moore, Inc.
Page 991; also Figs. 662, 663.

INJECTORS.

Manning, Maxwell & Moore, Inc.
Page 991; also Figs. 1340 to 1345.

Nathan Mfg. Co.
Catalogue Section p. 957; also Figs. 1346 to 1351.

Ohio Injector Co.
Page 978; also Figs. 1360 to 1363.

INJECTORS—Continued.

Sellers & Co., Inc., Wm.
Catalogue Section pp. 958-59; also Figs. 1352 to 1359.

INSTRUMENTS, ELECTRIC MEASURING.

General Electric Co.
Catalogue Section pp. 932-33.

INTENSIFIERS, HYDRAULIC, PNEUMATIC, STEAM.

Chambersburg Engineering Co.
Page 986.

IRON AND STEEL.

Parkesburg Iron Co.
Page 984.

Ryerson & Son, Jos. T.
Page 988.

Scully Steel & Iron Co.
Page 986.

Standard Steel Works Co.
Catalogue Section pp. 946-47.

JACKS.

Ryerson & Son, Jos. T.
Page 988.

Watson-Stillman Co.
Page 990; also Figs. 2330, 2331; 2530 to 2532; 2541.

Scully Steel & Iron Co.
Page 986.

JOURNAL BEARINGS.

National Malleable Castings Co.
Page 986.

Ryerson & Son, Jos. T.
Page 988.

JOURNAL BOXES AND DETAILS.

Chicago Railway Equipment Co.
Page 985; also Fig. 1992.

Gould Coupler Co.
Catalogue Section p. 950.

McCord & Co.
Page 980; also Figs. 1997 to 2002.

National Malleable Castings Co.
Page 986; also Figs. 2003 to 2010.

Pratt & Letchworth Co.
Catalogue Section p. 952.

Standard Car Truck Co.
Catalogue Section p. 951; also Fig. 2012.

KEYSEATING MACHINES.

Ryerson & Son, Jos. T.
Page 988; also Fig. 2526.

KNUCKLES, EMERGENCY.

Q & C Company.
Catalogue Section p. 955.

LABORATORIES, CHEMICAL AND TESTING.

Hunt & Co., Robert W.
Page 982.

LAGGING, LOCOMOTIVE BOILER.

Ryerson & Son, Jos. T.
Page 988.

LAMPS, ARC AND INCANDESCENT.

General Electric Co.
Catalogue Section pp. 932-33.

Westinghouse Electric & Mfg. Co.
Pages 974 to 977.

LATHES.

Bullard Machine Tool Co.
Catalogue Section pp. 960-61.

Manning, Maxwell & Moore, Inc.
Page 991; also Figs. 2428, 2446, 2447, 2450, 2527.

LATHES—Continued.

Niles-Bement-Pond Co.
Page 989; also Figs. 2430, 2438, 2442, 2445, 2449.

Pratt & Whitney Co.
Page 988; also Fig. 2430.

Ryerson & Son, Jos. T.
Page 988.

Sellers & Co., Inc., Wm.
Catalogue Section pp. 958-59; also Figs. 2431, 2448.

LOCK NUTS.

Columbia Nut & Bolt Co., Inc.
Page 980; also Figs. 856, 857, 2066, 2071.

LOCOMOTIVES, COMPRESSED AIR.

Baldwin Locomotive Works, The.
Catalogue Section pp. 922 to 927; also pp. 974, 976.

LOCOMOTIVES, ELECTRIC.

American Locomotive Co.
Catalogue Section pp. 918 to 921; also Figs. 2105, 2109, 2123; 2145 to 2171; 2199.

Baldwin Locomotive Works, The.
Catalogue Section pp. 922 to 927; and pp. 974, 976; also Figs. 2101, 2103, 2104, 2106; 2111 to 2118; 2175 to 2198; 2202.

General Electric Co.
Catalogue Section pp. 932-33; also Figs. 2102, 2105; 2107 to 2110; 2119, 2120, 2123; 2145 to 2174; 2199.

Westinghouse Electric & Mfg. Co.
Pages 974 to 977; also Figs. 2101, 2103, 2104, 2106; 2111 to 2118; 2121, 2122; 2124 to 2143; 2175 to 2198; 2202.

LOCOMOTIVES, GASOLENE.

Baldwin Locomotive Works, The.
Catalogue Section pp. 922 to 927; and pp. 974, 976; also Figs. 97, 99, 100.

LOCOMOTIVES, GEARED.

Lima Locomotive Corp.
Catalogue Section p. 928 to 930; also Figs. 95, 96, 143.

LOCOMOTIVES, INDUSTRIAL.

American Locomotive Co.
Catalogue Section pp. 918 to 921; also Figs. 4, 8, 11, 21.

Baldwin Locomotive Works, The.
Catalogue Section pp. 922 to 927; and pp. 974, 976; also Figs. 9, 12, 22, 30, 97, 99, 100.

Lima Locomotive Corp.
Catalogue Section pp. 928 to 930; also Figs. 5, 94, 95, 96, 101, 143.

LOCOMOTIVES, MINE.

American Locomotive Co.
Catalogue Section pp. 918 to 921.

Baldwin Locomotive Works, The.
Catalogue Section pp. 922 to 927; also pp. 974, 976.

General Electric Co.
Catalogue Section pp. 932-33.

Lima Locomotive Corp.
Catalogue Section pp. 928 to 930.

Westinghouse Electric & Mfg. Co.
Pages 974 to 977.

LOCOMOTIVES, STEAM.

American Locomotive Co.
Catalogue Section pp. 918 to 921; also Figs. 4, 8, 11, 14, 16, 20, 21, 25, 26, 29, 31, 32, 34, 35, 38, 41, 46, 49, 53, 58, 60, 62, 63, 68, 72, 75, 77, 78, 80, 82, 83, 88, 89, 90, 102, 103, 105; 108 to 110; 114, 122, 124; 126 to 128; 131, 132, 134, 135, 138, 140, 141.

LOCOMOTIVES, STEAM—Continued.

Baldwin Locomotive Works, The.
Catalogue Section pp. 922 to 927; and pp. 974, 976; also Figs. 7, 9, 10, 12, 13, 15, 17, 22, 24, 27, 28, 30, 33, 37, 44, 45, 47, 48, 50, 54, 59, 61, 64, 67, 69, 71, 79, 81; 84 to 87; 91, 92, 93, 104, 113; 115 to 119; 129, 136, 137, 139, 142, 144, 145.

Lima Locomotive Corp.
Catalogue Section pp. 928 to 930; also Figs. 5, 40, 65, 73, 94, 95, 96, 101, 143.

LOW WATER ALARMS.

Pilliod Co., The.
Catalogue Section pp. 940-41; also Fig. 1204.

LUBRICATORS.

McCord & Co.
Page 980; also Fig. 1317.

Nathan Mfg. Co.
Catalogue Section p. 957; also Figs. 1308, 1309.

Ohio Injector Co.
Page 978; also Figs. 1305 to 1307.

LUBRICATORS, FLANGE.

Ohio Injector Co.
Page 978; also Figs. 1332, 1333.

MACHINE TOOLS.

Bullard Machine Tool Co.
Catalogue Section pp. 960-61; also Figs. 2363, 2364.

Chambersburg Engineering Co.
Page 986; also Figs. 2420, 2422, 2425, 2478, 2482, 2489, 2522.

Landis Machine Co.
Page 988; also Figs. 2354 to 2356; 2359, 2460, 2462.

Manning, Maxwell & Moore, Inc.
Page 991; also Figs. 2372, 2428, 2446, 2447, 2450, 2464, 2527.

Niles-Bement-Pond Co.
Page 989; also Figs. 2365, 2366, 2374, 2377, 2380, 2385, 2386, 2393, 2418, 2419, 2430, 2438, 2442, 2445, 2449, 2452, 2466, 2471, 2480, 2481, 2488, 2492, 2505, 2506, 2508, 2511.

Pratt & Whitney Co.
Page 988; also Fig. 2430.

Ryerson & Son, Jos. T.
Page 988; also Figs. 2379, 2391, 2395, 2396; 2398 to 2400; 2421, 2476, 2483, 2486, 2491, 2498, 2512, 2518, 2521, 2526.

Scully Steel & Iron Co.
Page 986.

Sellers & Co., Inc., Wm.
Catalogue Section pp. 958-59; also Figs. 2367, 2370, 2376, 2378, 2389, 2431, 2448, 2507.

Underwood & Co., H. B.
Catalogue Section p. 962; also Figs. 2397, 2461, 2516, 2517, 2519, 2520, 2529.

Watson-Stillman Co.
Page 990; also Figs. 2472, 2473, 2475, 2477, 2513, 2524, 2528; 2530 to 2532; 2541.

METALLIC PACKING.

(See Packing, Metallic.)

MILLING MACHINES.

Niles-Bement-Pond Co.
Page 989; also Figs. 2452, 2511.

Pratt & Whitney Co.
Page 988.

Sellers & Co., Inc., Wm.
Catalogue Section pp. 958-59.

MOTORS.

General Electric Co.
Catalogue Section pp. 932-33; also Figs. 2164, 2165.

Westinghouse Electric & Mfg. Co.
Pages 974 to 977; also Figs. 2117, 2142, 2143, 2186, 2238.

NOZZLES, EXHAUST.

(See Exhaust Nozzles.)

NUT LOCKS.

Columbia Nut & Bolt Co., Inc.
Page 980; also Figs. 2066, 2071.

Flannery Bolt Co.
Catalogue Section p. 953.

NUTS AND BOLTS

(See Bolts and Nuts.)

OIL CUPS.

Manning, Maxwell & Moore, Inc.
Page 991; also Fig. 1329.

Nathan Mfg. Co.
Catalogue Section p. 957; also Figs. 1321 to 1326.

U. S. Metallic Packing Co.
Page 983; also Fig. 1328.

PACKING, METALLIC.

Jerome-Edwards Metallic Packing Co.
Page 980; also Figs. 831 to 833.

U. S. Metallic Packing Co.
Page 983; also Figs. 834 to 836.

PACKING RINGS, PISTON AND VALVE.

Locomotive Finished Material Co.
Catalogue Section p. 939.

PEDESTAL FACING MACHINES.

Underwood & Co., H. B.
Catalogue Section p. 962; also Fig. 2517.

PILOTS.

Commonwealth Steel Co.
Page 983; also Fig. 1061.

PILOT BEAMS.

Commonwealth Steel Co.
Page 983; also Figs. 1057; 1066 to 1070.

Gould Coupler Co.
Catalogue Section p. 950; also Fig. 1059.

PILOT STEPS.

Commonwealth Steel Co.
Page 983; also Fig. 1060.

PIPE MACHINERY.

Landis Machine Co.
Page 988; also Figs. 2460, 2462.

Niles-Bement-Pond Co.
Page 989.

Ryerson & Son, Jos. T.
Page 988.

Underwood & Co., H. B.
Catalogue Section p. 962; also Fig. 2461.

PIPES, HYDRAULIC.

Chambersburg Engineering Co.
Page 986.

PISTONS, ROLLED STEEL.

Standard Steel Works Co.
Catalogue Section pp. 946-47; also Fig. 814.

PLANERS.

Manning, Maxwell & Moore, Inc.
Page 991; also Fig. 2464.

Niles-Bement-Pond Co.
Page 989; also Figs. 2466, 2471.

Ryerson & Son, Jos. T.
Page 988.

Sellers & Co., Inc., Wm.
Catalogue Section pp. 958-59.

Underwood & Co., H. B.
Catalogue Section p. 962.

PLATES, BOILER AND FIREBOX.

Ryerson & Son, Jos. T.
Page 988.

Scully Steel & Iron Co.
Page 986.

PLATES, FLOOR.

Scully Steel & Iron Co.
Page 986; also Figs. 1102, 1103.

PRESSED STEEL SHAPES.

Pressed Steel Car Co.
Page 982.

PRESSES, HYDRAULIC.

Chambersburg Engineering Co.
Page 986; also Figs. 2478, 2482.

Manning, Maxwell & Moore, Inc.
Page 991.

Niles-Bement-Pond Co.
Page 989; also Figs. 2480, 2481.

Ryerson & Son, Jos. T.
Page 988; also Fig. 2476.

Scully Steel & Iron Co.
Page 986.

Sellers & Co., Inc., Wm.
Catalogue Section pp. 958-59.

Watson-Stillman Co.
Page 990; also Figs. 2472, 2473, 2475, 2477, 2524.

PROTECTORS, WATER GLASS.

(See Water Glass Protectors.)

PUMPS AND PUMPING MACHINERY.

Chambersburg Engineering Co.
Page 986.

Scully Steel & Iron Co.
Page 986.

Watson-Stillman Co.
Page 990.

PUNCHING AND SHEARING MACHINES.

Chambersburg Engineering Co.
Page 986.

Pratt & Whitney Co.
Page 988.

Ryerson & Son, Jos. T.
Page 988; also Figs. 2483, 2486.

Scully Steel & Iron Co.
Page 986.

Sellers & Co., Inc., Wm.
Catalogue Section pp. 958-59.

Watson-Stillman Co.
Page 990.

PYROMETERS.

Locomotive Superheater Co.
Catalogue Section pp. 936 to 938; also Figs. 428, 429.

QUARTERING MACHINES.

Niles-Bement-Pond Co.
Page 989; also Fig. 2488.

REAMERS.

Pratt & Whitney Co.
Page 988.

Scully Steel & Iron Co.
Page 986.

REGULATORS, STEAM HEAT.

Mason Regulator Co.
Page 983; also Figs. 1265, 1266.

REPLACERS, CAR AND LOCOMOTIVE.

Q & C Company.
Catalogue Section p. 955.

RESERVOIRS, AIR.

Westinghouse Air Brake Co.
Page 979.

REVERSE GEARS, POWER.

Economy Devices Corporation.
Catalogue Section pp. 911 to 917; also Figs. 752, 754.

REVERSE GEARS, POWER—Continued.

Pittsburgh Locomotive Power Reverse Gear Co.
Page 984.

REVERSE GEARS, SCREW.

Lima Locomotive Corp.
Catalogue Section pp. 928 to 930; also Fig. 779.

Pyle-National Electric Headlight Co.
Catalogue Section pp. 944-45; also Figs. 751, 753.

RHEOSTATS.

General Electric Co.
Catalogue Section pp. 932-33; also Fig. 2223.

RIVETS.

Ryerson & Son, Jos. T.
Page 988.

Scully Steel & Iron Co.
Page 986.

RIVETING MACHINERY.

Chambersburg Engineering Co.
Page 986; also Figs. 2489, 2522.

Niles-Bement-Pond Co.
Page 989.

Scully Steel & Iron Co.
Page 986.

Sellers & Co., Inc., Wm.
Catalogue Section pp. 958-59.

Watson-Stillman Co.
Page 990.

ROLLED STEEL RINGS.

Standard Steel Works Co.
Catalogue Section pp. 946-47.

ROLLS, BENDING AND STRAIGHTENING.

Chambersburg Engineering Co.
Page 986.

Niles-Bement-Pond Co.
Page 989; also Fig. 2492.

Scully Steel & Iron Co.
Page 986.

Sellers & Co., Inc., Wm.
Catalogue Section pp. 958-59.

SAFE ENDS.

Parkesburg Iron Co.
Page 984.

SANDERS.

Nathan Mfg. Co.
Catalogue Section p. 957.

U. S. Metallic Packing Co.
Page 983; also Figs. 1634 to 1636.

SAWS.

Ryerson & Son, Jos. T.
Page 988; also Fig. 2491.

Scully Steel & Iron Co.
Page 986.

Underwood & Co., H. B.
Catalogue Section p. 962.

SECTIONAL ARCHES.

(See Arches, Brick.)

SHAFTING.

Scully Steel & Iron Co.
Page 986.

Sellers & Co., Inc., Wm.
Catalogue Section pp. 958-59.

SHAPERS.

Niles-Bement-Pond Co.
Page 989; also Fig. 2505.

Pratt & Whitney Co.
Page 988.

SHAPERS—Continued.

Ryerson & Son, Jos. T.
Page 988; also Fig. 2498.

Sellers & Co., Inc., Wm.
Catalogue Section pp. 958-59.

SHOES, SKID.

Q & C Company.
Catalogue Section p. 955.

SIDE BEARINGS.

(See Bearings, Side.)

SIDE FRAMES.

American Steel Foundries,
Catalogue Section p. 949.

Gould Coupler Co.
Catalogue Section p. 950; also Figs. 1931, 1932.

SLACK ADJUSTERS.

(See Brake Slack Adjusters.)

SLOTTERS.

Niles-Bement-Pond Co.
Page 989; also Figs. 2506, 2508.

Sellers & Co., Inc., Wm.
Catalogue Section pp. 958-59; also Fig. 2507.

SNOW FLANGERS.

(See Flangers, Snow.)

SNOW PLOWS.

Q & C Company.
Catalogue Section p. 955; also Figs. 1097 to 1099; 1101.

SPRINGS.

American Steel Foundries.
Catalogue Section p. 949; also Figs. 969, 2058, 2059.

Railway Steel-Spring Co.
Page 987.

Standard Steel Works Co.
Catalogue Section pp. 946-47; also Figs. 970 to 975; 2062 to 2064.

SPRING DAMPENER.

McCord & Co.
Page 980; also Fig. 2061.

SPRING STRIPPING MACHINES.

Ryerson & Son, Jos. T.
Page 988; also Fig. 2512.

SPRINKLERS, COAL.

(See Coal Sprinklers.)

STAYBOLTS.

Flannery Bolt Co.
Catalogue Section p. 953; also Figs. 220 to 224.

Ryerson & Son, Jos. T.
Page 988.

Scully Steel & Iron Co.
Page 986.

STAYBOLTS, FLEXIBLE.

Flannery Bolt Co.
Catalogue Section p. 953; also Figs. 220 to 224.

STAYBOLT MACHINES.

Landis Machine Co.
Page 988.

Ryerson & Son, Jos. T.
Page 988.

STEAM CHESTS.

Economy Devices Corporation.
Catalogue Section pp. 911 to 917; also Fig. 689.

STEEL AND IRON.

(See Iron and Steel.)

STRAINERS, TANK HOSE.

Lima Locomotive Corp.
Catalogue Section pp. 928 to 930; also Figs. 1827, 1829.

Manning, Maxwell & Moore, Inc.
Page 991; also Fig. 1824.

Nathan Mfg. Co.
Catalogue Section p. 957; also Fig. 1822.

Ohio Injector Co.
Page 978; also Fig. 1830.

Sellers & Co., Inc., Wm.
Catalogue Section pp. 958-59.

SUPERHEATERS, LOCOMOTIVE.

Locomotive Superheater Co.
Catalogue Section pp. 936 to 938; also Figs. 421 to 429.

SWITCHES.

General Electric Co.
Catalogue Section pp. 932-33.

Westinghouse Electric & Mfg. Co.
Pages 974 to 977; also Figs. 2207 to 2222.

TANKS, TENDER.

American Locomotive Co.
Catalogue Section pp. 918 to 921; also Fig. 1752.

Baldwin Locomotive Works, The.
Catalogue Section pp. 922 to 927; and pp. 974, 976; also Figs. 1747 to 1749; 1755, 1757, 1759.

TAPS.

Pratt & Whitney Co.
Page 988.

Scully Steel & Iron Co.
Page 986.

TENDERS, LOCOMOTIVES.

(See Locomotives, Steam.)

TESTERS, BOILER.

(See Boiler Washers, Fillers and Testers.)

TESTERS, GAGE.

Manning, Maxwell & Moore, Inc.
Page 991.

TESTING MACHINES.

Sellers & Co., Inc., Wm.
Catalogue Section pp. 958-59.

TESTING MATERIAL.

Hunt & Co., Robert W.
Page 982.

THROTTLE VALVES.

Chambers Valve Co.
Catalogue Section p. 942; also Figs. 298 to 302.

TIRES.

Railway Steel-Spring Co.
Page 987.

Standard Steel Works Co.
Catalogue Section pp. 946-47.

TOOL STEEL.

Ryerson & Son, Jos. T.
Page 988.

TRANSFER TABLES.

Sellers & Co., Inc., Wm.
Catalogue Section pp. 958-59.

TRANSMISSION, CHAIN.

Morse Chain Co.
Catalogue Section p. 956.

TRANSMISSION MACHINERY.

Sellers & Co., Inc., Wm.
Catalogue Section pp. 958-59.

TRUCKS, ELECTRIC LOCOMOTIVE.

American Locomotive Co.
Catalogue Section pp. 918 to 921; also Figs. 2110, 2149, 2168, 2169.

Baldwin Locomotive Works, The.
Catalogue Section pp. 922 to 927; and pp. 974, 976; also Figs. 2182, 2201.

TRUCKS, ENGINE AND TENDER.

American Locomotive Co.
Catalogue Section pp. 918 to 921; also Figs. 976 to 978; 980, 999, 1014, 1020, 1023, 1024, 1913, 1919.

American Steel Foundries.
Catalogue Section p. 949; also Fig. 1906.

Baldwin Locomotive Works, The.
Catalogue Section pp. 922 to 927; and pp. 974, 976; also Figs. 985, 998, 1015, 1016; 1026 to 1033; 1912, 1917, 1918, 1924, 1929.

Commonwealth Steel Co.
Page 983; also Figs. 981, 1009, 1010, 1025, 1904, 1905, 1908, 1910.

Economy Devices Corporation.
Catalogue Section pp. 911 to 917; also Figs. 992, 994, 1007, 1008, 1927.

Lima Locomotive Corporation.
Catalogue Section pp. 928 to 930; also Fig. 1021.

Pressed Steel Car Co.
Page 982.

Standard Car Truck Co.
Catalogue Section p. 951; also Figs. 1034, 1907, 1920, 1928.

TUBES, BOILER.

Parkesburg Iron Co.
Page 984.

Ryerson & Son, Jos. T.
Page 988.

Scully Steel & Iron Co.
Page 986.

TUBES, STAY.

Parkesburg Iron Co.
Page 984.

TUBES, SUPERHEATER.

Parkesburg Iron Co.
Page 984.

TUBE CUTTERS.

Ryerson & Son, Jos. T.
Page 988; also Fig. 2395.

Scully Steel & Iron Co.
Page 986.

TUBE EXPANDERS.

(See Expanders, Tube.)

TURBINES, STEAM.

General Electric Co.
Catalogue Section pp. 932-33.

TURNTABLES.

Sellers & Co., Inc., Wm.
Catalogue Section pp. 958-59.

UNDERFRAMES, TENDER.

Commonwealth Steel Co.
Page 983; also Figs. 1781, 1782.

VALVE GEAR.

Pilliod Co., The.
Catalogue Section pp. 940-41; also Figs. 738 to 745.

Pyle-National Electric Headlight Co.
Catalogue Section pp. 944-45; also Figs. 751, 753.

VALVE SEAT ROTARY PLANING MACHINES.

Underwood & Co., H. B.
Catalogue Section p. 962; also Fig. 2529.

VALVES, BALANCED PISTON.

Economy Devices Corporation.
Catalogue Section pp. 911 to 917; also Fig. 689.

Mason Regulator Co.
Page 983.

Pyle-National Electric Headlight Co.
Catalogue Section pp. 944-45; also Fig. 695.

VALVES, BLOWER.

Nathan Mfg. Co.
Catalogue Section p. 957.

VALVES, BLOW-OFF.

Manning, Maxwell & Moore, Inc.
Page 991.

Nathan Mfg. Co.
Catalogue Section p. 957; also Fig. 340.

Ryerson & Son, Jos. T.
Page 988.

Scully Steel & Iron Co.
Page 986.

VALVES, BOILER CHECK AND STOP.

Manning, Maxwell & Moore, Inc.
Page 991; also Figs. 1374, 1376, 1377, 1379, 1384.

Nathan Mfg. Co.
Catalogue Section p. 957; also Figs. 1375; 1380 to 1383.

Ohio Injector Co.
Page 978; also Fig. 1390.

Sellers & Co., Inc., Wm.
Catalogue Section pp. 958-59; also Figs. 1385, 1386, 1389.

VALVES, DRIFTING.

Nathan Mfg. Co.
Catalogue Section p. 957; also Fig. 643.

Ohio Injector Co.
Page 978.

VALVES, GLOBE.

Nathan Mfg. Co.
Catalogue Section p. 957.

VALVES, HYDRAULIC.

Chambersburg Engineering Co.
Page 986.

Watson-Stillman Co.
Page 990.

VALVES, MAIN STEAM.

Manning, Maxwell & Moore, Inc.
Page 991; also Fig. 1220.

Mason Regulator Co.
Page 983.

Nathan Mfg. Co.
Catalogue Section p. 957; also Fig. 1235.

Ohio Injector Co.
Page 978.

Sellers & Co., Inc., Wm.
Catalogue Section pp. 958-59.

VALVES, PRESSURE REDUCING.

Mason Regulator Co.
Page 983; also Figs. 1265, 1266.

VALVES, RELIEF.

Nathan Mfg. Co.
Catalogue Section p. 957; also Figs. 615, 616.

VALVES, SAFETY.

Manning, Maxwell & Moore, Inc.
Page 991; also Figs. 349 to 351.

Nathan Mfg. Co.
Catalogue Section p. 957.

VALVES, STARTING.

Nathan Mfg. Co.
Catalogue Section p. 957; also Fig. 614.

VALVES, THROTTLE.

(See Throttle Valves.)

VESTIBULES.

Gould Coupler Co.
Catalogue Section p. 950.

McConway & Torley Co.
Catalogue Section p. 948.

VISES.

Scully Steel & Iron Co.
Page 986.

WATER CIRCULATION SYSTEMS.

Q & C Company.
Catalogue Section p. 955; also Figs. 326 to 328.

WATER GAGES.

(See Gages, Water.)

WATER GLASS PROTECTORS.

Ohio Injector Co.
Page 978.

WELDING, ELECTRIC ARC.

General Electric Co.
Catalogue Section pp. 932-33.

Westinghouse Electric & Mfg. Co.
Pages 974 to 977.

WELDING, OXY-ACETYLENE.

Scully Steel & Iron Co.
Page 986.

WHEELS.

American Steel Foundries.
Catalogue Section p. 949; also Figs. 2022, 2025.

Pressed Steel Car Co.
Page 982.

Railway Steel-Spring Co.
Page 987; also Figs. 2046 to 2049.

Standard Steel Works Co.
Catalogue Section pp. 946-47; also Figs. 2027 to 2042.

WHEEL CENTERS.

American Locomotive Co.
Catalogue Section pp. 918 to 921; also Figs. 2019, 2020, 2023.

Commonwealth Steel Co.
Page 983; also Fig. 905.

Pratt & Letchworth Co.
Catalogue Section p. 952.

Railway Steel-Spring Co.
Page 987.

Standard Steel Works Co.
Catalogue Section pp. 946-47.

Union Steel Casting Co.
Page 982.

WHISTLES.

Nathan Mfg. Co.
Catalogue Section p. 957; also Fig. 1667

WRECKING HOOKS.

National Malleable Castings Co.
Page 986.

WRENCHES.

National Malleable Castings Co.
Page 986.

TRADE NAME INDEX

A

ACME Brake Beams. American Steel Foundries, page 949.

AJAX Brake Beams; Third Point Support. American Steel Foundries, page 949.

ALLIANCE Couplers. American Steel Foundries, page 949.

ANDREWS Side Frames. American Steel Foundries, page 949.

ASHCROFT Air Brake, Steam, Steam Heat and Water Gages; Gage Testers. Manning, Maxwell & Moore, Inc., page 991.

ATLAS Brake Beam Safety Guards. American Steel Foundries, page 949.

AUSTIN Trailing Trucks. Lima Locomotive Corporation, pages 928 to 930.

B

BAKER Valve Gear. The Pilliod Co., pages 940-41.

BALDWIN-WESTINGHOUSE Electric Locomotives. The Baldwin Locomotive Works, pages 922 to 927; 974, 976. Westinghouse Electric & Mfg. Co., pages 974 to 977.

BARBER Drop Down Brake Mast; Lateral Motion Truck Device; Radial and Lateral Motion Trucks; Roller Bearing Center Plates; Roller Bearing Journal Boxes; Roller Side Bearings. Standard Car Truck Co., page 951.

BARBER-DEVOY Trailer Trucks. Standard Car Truck Co., page 951.

BUFFALO Brake Beams. Buffalo Brake Beam Co., page 978.

BUFFALO Journal Boxes. Pratt & Letchworth Co., page 952.

BULLARD Vertical Boring and Turning Mills; Vertical Turret Lathes. Bullard Machine Tool Co., pages 960-61.

C

CASEY-CAVIN Power Reverse Gears. Economy Devices Corporation, pages 911 to 917.

CASTELATED Nuts. Columbia Nut & Bolt Co., Inc., page 980.

CHAMBERS Throttle Valves. Chambers Valve Co., page 942.

CHAMBERSBURG Accumulators; Cranes; Hydraulic Presses; Hydraulic Valves; Intensifiers; Pumps and Pumping Machinery; Riveters; Steam Hammers; Valve Packings. Chambersburg Engineering Co., page 986.

CHICAGO Automatic Drifting Valves; Flange Oilers; Injectors; Lubricators. Ohio Injector Co., page 978.

CLIMAX Couplers. National Malleable Castings Co., page 986.

COLEMAN Bolster Locking Center Pins. W. H. Miner, page 973.

COLUMBIA Lock Nuts; Nut Locks. Columbia Nut & Bolt Co., Inc., page 980.

COMMONWEALTH Engine Trucks; Tender Trucks, and other Locomotive Devices. Commonwealth Steel Co., page 983.

CONSOLIDATED Safety Valves. Manning, Maxwell & Moore, Inc., page 991.

CRECO Brake Beams; Journal Boxes and Lids; Roller Side Bearings; Slack Adjusters; Sliding Third Point Brake Beam Support. Chicago Railway Equipment Co., page 985.

D

DAVIS Cast Steel Wheels. American Steel Foundries, page 949.

DAVIS Driving Wheel Centers. Commonwealth Steel Co., page 983.

DELCO Water Gages. Nathan Mfg. Co., page 957.

DIAMOND Brake Beams. Chicago Railway Equipment Co., page 985.

DIAMOND "S" Engine and Tender Truck Brake Shoes. American Brake Shoe & Fdy. Co., page 978.

DIAMOND "S" PERFECTO Driver Brake Shoes. American Brake Shoe & Fdy. Co., page 978.

DIAMOND SPECIAL Brake Beams. Chicago Railway Equipment Co., page 985.

DREXEL Brake Beams. Chicago Railway Equipment Co., page 985.

DUPLEX Brake Beam Struts. Chicago Railway Equipment Co., page 985.

E

ECONOMY Draft Arms. American Steel Foundries, page 949.

ECONOMY Engine Trucks; Exhaust Nozzles; Radial Buffers; Tender Trucks. Economy Devices Corporation, pages 911 to 917.

EDWARDS Metallic Packing. Jerome-Edwards Metallic Packing Co., page 980.

EVERLASTING Blow-Off Valves. Scully Steel & Iron Co., page 986.

F

F. B. C. Arch Bar Nut Locks. Flannery Bolt Co., page 953.

FEWINGS Car Replacers. Q & C Co., page 955.

FLORY Carry Iron and Striking Plate. Commonwealth Steel Co., page 983.

FOX Tender Trucks. Pressed Steel Car Co., page 982.

G

GAINES Combustion Chamber; Furnace. American Arch Co., pages 934-35.

G-E Air Compressors; Battery Truck Cranes; Electric Apparatus and Supplies; Electric Locomotives; Gas-Electric Motor Cars; Generators; Headlights; Lamps; Motors; Steam Turbines. General Electric Co., pages 932-33.

GIB Nut Locks. Columbia Nut & Bolt Co., Inc., page 980.

GILMAN-BROWN Emergency Knuckles. Q & C Co., page 955.

GOLLMAR Bell Ringers. U. S. Metallic Packing Co., page 983.

GOULD Axles; Bolsters; Couplers; Draft Arms; End Sills with Friction Buffer and Draft Gear; Friction Draft Gears; Journal Boxes and Lids; Tender and Pilot Spring Buffers. Gould Coupler Co., page 950.

GOULD UNIVERSAL Slack Adjusters. Gould Coupler Co., page 950.

H

HANCOCK Boiler Fillers; Boiler Testers; Boiler Washers; Ejectors; Hose Strainers; Inspirators; Pneumatic Cylinder Cocks; Valves. Manning, Maxwell & Moore, Inc., page 991.

H-D Ejectors. Manning, Maxwell & Moore, Inc., page 991.

HERCULES Brake Beams. American Steel Foundries, page 949.

HUNT-SPILLER Gun Iron Castings. Hunt-Spiller Manfg. Corporation, page 984.

I

IMPROVED PERFECTO Driver Brake Shoes. American Brake Shoe & Fdy. Co., page 978.

IMPROVED SULLIVAN Metallic Packing. Jerome-Edwards Metallic Packing Co., page 980.

INDESTRUCTIBLE Oil Cups. U. S. Metallic Packing Co., page 983.

J

JACOBS-SHUPERT Firebox. Jacobs-Shupert U. S. Firebox Co., page 931.

JANNEY Couplers. McConway & Torley Co., page 948.

JEROME Metallic Packing. Jerome-Edwards Metallic Packing Co., page 980.

K

KEWANEE Brake Beams. Chicago Railway Equipment Co., page 985.

KING Metallic Packing. U. S. Metallic Packing Co., page 983.

KLING Bolts. Columbia Nut & Bolt Co., Inc., page 980.

KLINGER Water Gages. Nathan Mfg. Co., page 957.

KROMAX Leather Packings. Watson-Stillman Co., page 990.

K. W. Trailer Trucks. Commonwealth Steel Co., page 983.

L

LANDIS Bolt and Nut Machinery; Bolt Threading Machines; Dies; Die Heads; Pipe Threading and Cutting Machines. Landis Machine Co., Inc., page 988.

LATROBE Couplers. National Malleable Castings Co., page 986.

LEACH Track Sanders. U. S. Metallic Packing Co., page 983.

LIMA Clamps for Tank Hose Strainers; Locomotives; Screw Reverse Gears; Tank Hose Strainers. Lima Locomotive Corporation, pages 928 to 930.

M

MASON Air Pump Governors; Balanced Piston, Float, Pressure Reducing and Steam Valves; Steam Heat Regulators. Mason Regulator Co., page 983.

McCORD Draft Gears; Journal Boxes; Lubricators; Spring Dampener. McCord & Co., page 980.

METROPOLITAN Injectors. Manning, Maxwell & Moore, Inc., page 991.

MINER Center Plate Shims; Center Sills; Coupler Centering Device; Coupler Yokes; Draft Arms; Draft Rigging; Friction Draft Gears; Running Board Saddles; Side Bearings. W. H. Miner, page 973.

MONARCH Brake Beams. Chicago Railway Equipment Co., page 985.

MONITOR Inectors. Nathan Mfg. Co., page ment Co., page 985.

MONITOR Injectors. Nathan Mfg. Co., page 957.

MORSE Silent Chains; Silent Chain Drives; Silent Chain Sprockets; Silent Chain Transmission. Morse Chain Co., page 956.

MUNTON Couplers. National Malleable Castings Co., page 986.

N

NATHAN Boiler Fillers; Boiler Washers and Testers; Blow-off, Cylinder, Gage, Lazy and Tank Cocks; Coal Sprinklers; Ejectors; Fire Extinguishers; Injectors; Lubricators; Oilers and Oil Pumps; Sanding Apparatus; Strainers; Vacuum Breakers; Valves; Whistles. Nathan Mfg. Co., page 957.

NATIONAL Adjustable Brake Beam Fulcrums; Brake Jaws; Coiled Spring Journal Boxes; Dead Lever Guides; Extended Floor Engine Pockets; Quadruple Shear Yokes; Safety Brake Levers; Safety Clevis and Pin. National Malleable Castings Co., page 986.

NATIONAL HOLLOW Brake Beams. Chicago Railway Equipment Co., page 985.

NIKROME Axle Steel. Joseph T. Ryerson & Son, page 988.

NILES Accumulators; Bending Rolls; Boring Machines; Boring and Drilling Machines; Boring and Turning Mills; Centering Machines; Cotter Drilling and Keyseating Machines; Cranes; Drilling Machines; Flanging Clamps; Hydraulic Presses; Lathes; Milling Machines; Planers; Shapers; Slotters; Steam Hammers; Straightening Rolls; Wheel Quartering Machines. Niles-Bement-Pond Co., page 989.

NINETY-SIX Brake Beam. Chicago Railway Equipment Co., page 985.

O

OHIO Boiler Check Valves; Cab Squirts; Fire Jets; Hose Strainers; Injectors; Water Gage Glass Protectors. Ohio Injector Co., page 978.

ONE-PIECE Tender Frames. Commonwealth Steel Co., page 983.

P

PAKRING METAL Cylinders; Cylinder Bushings; Cylinder Packing Rings; Valve Chamber Bushings; Valve Packing Rings. The Locomotive Finished Material Co., page 939.

PARKESBURG Charcoal Iron Arch Pipe; Boiler Tubes; Safe Ends; Stay Tubes; Superheater Tubes. Parkesburg Iron Co., page 984.

PEFFERS Hose Protectors. Q & C Co., page 955.

PENN Couplers. McConway & Torley Co., page 948.

PERFECTO Driver Brake Shoes. American Brake Shoe & Fdy. Co., page 978.

PITT Couplers. McConway & Torley Co., page 948.

PRATT & WHITNEY Dies; Die Stock Sets; Drilling Machines; Drills; Grinding Machines; Lathes; Milling Cutters; Milling Machines; Punches; Reamers; Shapers; Standard Measuring Gages; Taps. Pratt & Whitney Co., page 988.

PUTNAM Car Wheel Borers; Lathes; Planers; Wheel Presses. Manning, Maxwell & Moore, Inc., page 991.

PYLE-NATIONAL Electric Headlights; Electric Headlight Equipment. Pyle-National Electric Headlight Co., pages 944-45.

Q

Q & C Derails; Skid Shoes. Q & C. Co., page 955.

Q & C FEWINGS Car Replacers. Q & C Co., page 955.

Q & C GILMAN-BROWN Emergency Knuckles. Q & C Co., page 955.

Q & C PEFFERS Hose Protectors. Q & C Co., page 955.

Q & C RAY Snow Flangers; Snow Plows. Q & C Co., page 955.

R

RAGONNET Power Reverse Gears. Economy Devices Corporation, pages 911 to 917.

RAY Snow Flangers; Snow Plows. Q & C Co., page 955.

RELIANCE Brake Beams. Chicago Railway Equipment Co., page 985.

RENSHAW Ratchet Drills. Pratt & Whitney Co., page 988.

RIEGEL Firebox. Lima Locomotive Corporation, pages 928 to 930.

ROCKER-JOINT Silent Driving Chains. Morse Chain Co., page 956.

ROSS-SCHOFIELD Boiler Water Circulation System. Q & C Co., page 955.

RYERSON Iron and Steel Products; Machinery. Joseph T. Ryerson & Son, page 988.

S

SCHROEDER Electric Headlights; Electric Headlight Equipment. Schroeder Headlight Co., page 943.

SCULLY Hose Couplings; Iron and Steel Products; Shop Equipment. Scully Steel & Iron Co., page 986.

SECURITY Sectional Arch. American Arch Co., pages 934-35.

SELLERS Accumulators; Bending Rolls; Bolt Cutters; Boring Machines; Check Valves; Coupling Nuts; Cranes; Drilling Machines; Forcing Machines; Grinding Machines; Hoisting Machinery; Injectors; Lathes; Milling Machines; Planers; Power Transmission; Punching Machines; Riveting Machines; Sand Mixing Machines; Shafting; Shapers; Shearing Machines; Slotters; Steam Hammers; Straightening Machines; Testing Machines Transfer Tables; Turntables; Wheel Presses. Wm. Sellers & Co., Incorporated, pages 958-59.

SENTINEL Low Water Alarms. The Pilliod Co., pages 940-41.

SHARON Couplers. National Malleable Castings Co., page 986.

SHAW Cranes; Hoists. Manning, Maxwell & Moore, Inc., page 991.

SHAY Geared Locomotives. Lima Locomotive Corporation, pages 928 to 930.

SIMPLEX Bolsters; Couplers. American Steel Foundries, page 949.

SIMPLEX Injectors. Nathan Mfg. Co., page 957.

SIMPLICITY Cotter Keys. Columbia Nut & Bolt Co., Inc., page 980.

STANDARD Rolled Steel Gear Blanks; Rolled Steel Rings; Solid Forged and Rolled Steel Wheels; Steel and Iron Forgings; Steel and Malleable Iron Castings; Steel Axles; Steel Crusher Rolls and Shells; Steel Pipe Flanges; Steel Springs; Steel Tired Wheels; Steel Tires. Standard Steel Works Co., pages 946-47.

STERLINGWORTH Brake Beams. Chicago Railway Equipment Co., page 985.

SULLIVAN Metallic Packing. (See **IMPROVED SULLIVAN** Metallic Packing.)

SUNBEAM Electric Headlights; Electric Headlight Equipment. Schroeder Headlight Co., page 943.

SUSEMIHL Side Bearings. American Steel Foundries, page 949.

T

TATE Flexible Staybolts. Flannery Bolt Co., page 953.

THREE STEM Couplers. McConway & Torley Co., page 948.

TOWER Couplers. National Malleable Castings Co., page 986.

U

ULSTER Iron; Special Staybolt Iron. Joseph T. Ryerson & Son, page 988.

UNDERWOOD Boring Bars; Boring Machines; Crank Pin Turning Machines; Facing Machines; Grinding Machines; Milling Machines; Pipe Bending Machines; Planer Tools; Rail Saws; Rotary Flue Cleaners; Valve Seat Rotary Planers. H. B. Underwood & Co., page 962.

UNITED STATES Metallic Packing. U. S. Metallic Packing Co., page 983.

UNIVERSAL Sectional Packing Rings. The Locomotive Finished Material Co., page 939.

UNIVERSAL Valve Chest. Economy Devices Corporation, pages 911 to 917.

V

VANDERBILT Brake Beams. Buffalo Brake Beam Co., page 978.

VERTICAL Turret Lathes. Bullard Machine Tool Co., pages 960-61.

VULCAN Brake Beams; Side Frames. American Steel Foundries, page 949.

VULCAN Couplers. National Malleable Castings Co., page 986.

W

WATERTOWN Automatic Cylinder Cocks; Blower Pipe Drain Fittings; Safety Squirt Hose. Watertown Specialty Co., page 954.

WATSON-STILLMAN Hydraulic Presses and Tools. Watson-Stillman Co., page 990.

WESTINGHOUSE Air Brakes; Air Brake Compressors; Air Signalling Devices; Friction Draft Gears. Westinghouse Air Brake Co., page 979.

WESTINGHOUSE Arc and Incandescent Lamps; Electric Apparatus and Supplies; Electric Arc Welding Outfits; Electric Locomotives; Generators; Motors; Power Plant Apparatus; Rotary Converters; Storage Battery Charging Sets; Transformers. Westinghouse Electric & Mfg. Co., pages 974 to 977.

Y

YOUNG Reverse Gears; Valve Gears; Valves. Pyle-National Electric Headlight Co., pages 944-45.

MINER

FRICTION DRAFT GEAR

CLASS
A-18

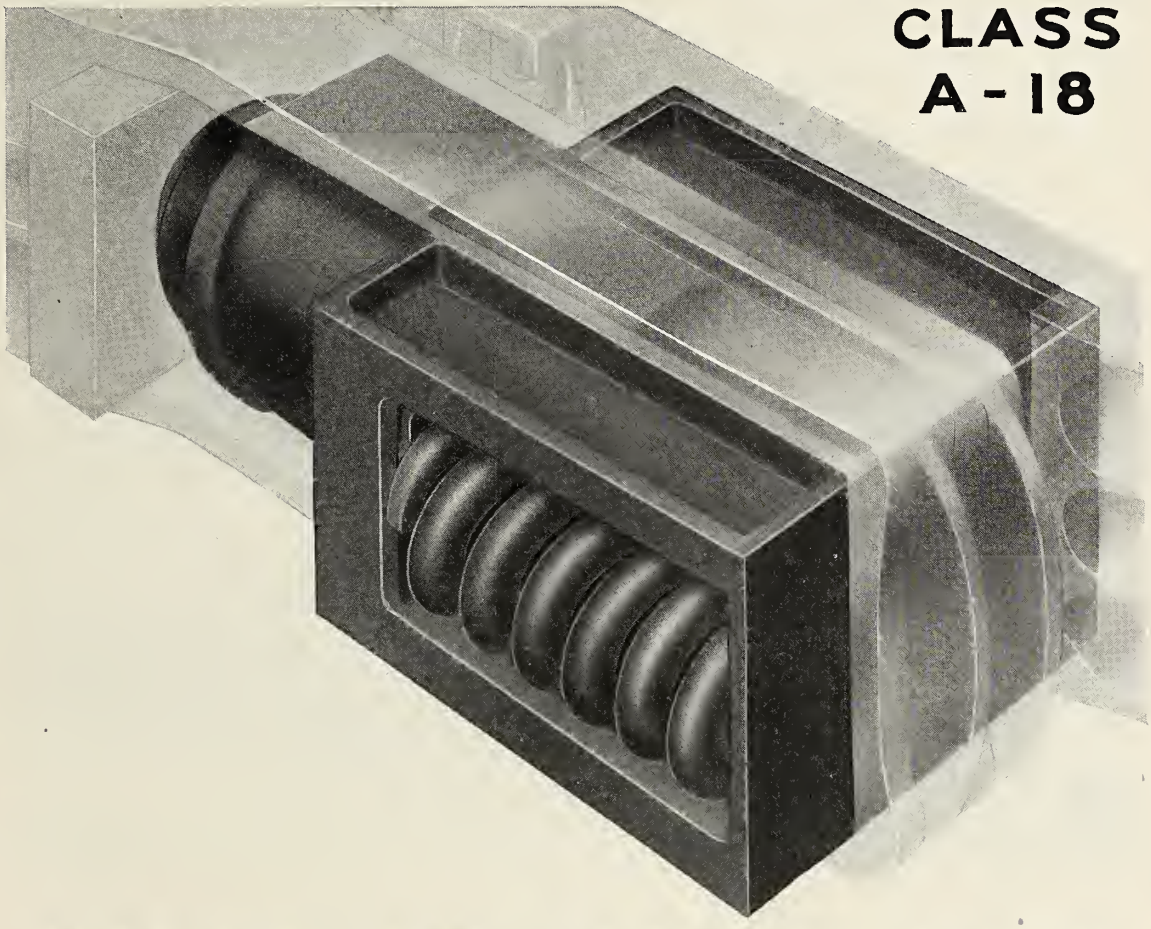

MINER FRICTION DRAFT GEAR EMBODIES PROPER DESIGN AND HIGHEST QUALITY MATERIAL; IS IDEAL IN ACTION; HAS WONDERFUL CAPACITY AND IS SUCCESSFULLY MEETING EVERY REQUIREMENT OF SERVICE.

W. H. MINER - CHICAGO

Operating Efficiency

Norfolk & Western Railway

Electric operation on the famous Elkhorn Grade—"Indicates that the capacity of the line has been doubled, and that the operating cost per ton mile will be materially reduced."

(—Annual Report, Norfolk & Western Railway, 1915.)

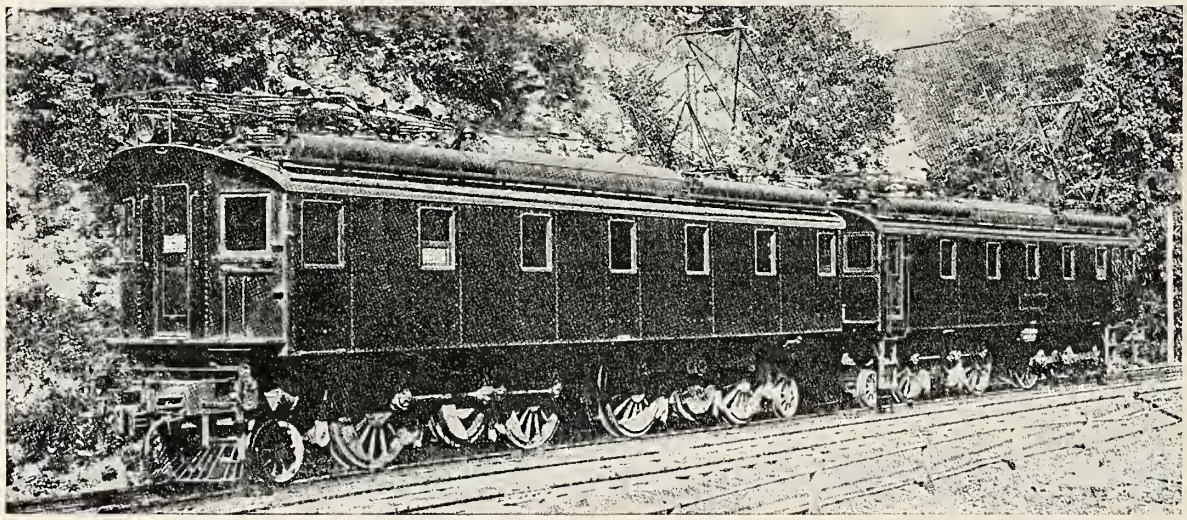

270-Ton Baldwin-Westinghouse Electric Locomotive

Most Powerful Locomotives In the World

Each train of 3250 tons is handled by two of these engines on the 2 percent Elkhorn Grade, at double the speed of former steam operation with three Mallet locomotives.

This increase in operating results is secured over noteworthy steam operation with intensified traffic.

4,500,000 Revenue Ton Miles Per Mile of Road Per Annum

The Baldwin Locomotive Works
Philadelphia, Pa.

Westinghouse Electric & Mfg. Co.
East Pittsburgh, Pa.

REPAIRING LOCOMOTIVE FRAME

"We Have Saved $1200 Per Month

in actual cost of repairs by using an electric arc welding equipment in one of the shops on our system." So writes a prominent motive power man.

This was a Westinghouse equipment, of course. There are many other shops where our welding equipments are making showings as good or better. You can make similar economies with an installation costing from $1500.00 to $2500.00. The above saving does not include that due to the shorter time the rolling stock is out of service, which amounts to over $40.00 per locomotive per day.

The following systems use Westinghouse Electric Arc Welding Equipments:

Cleveland, Cincinnati, Chicago & St. Louis
Cincinnati, Hamilton & Dayton
Baltimore & Ohio
Carolina, Clinchfield & Ohio
Chicago Great Western
Coal & Coke Railway
Cumberland Valley
Kansas City, Mexico & Orient
Lehigh Valley
Norfolk & Western
Pennsylvania
Philadelphia & Reading
Pittsburgh & Lake Erie
Seaboard Air Line
Union Pacific
Western Maryland

Send for Booklet, "Electric Arc Welding Processes"

Westinghouse Electric and Manufacturing Co.

Sales Offices in all Large American Cities

East Pittsburgh, Pennsylvania

Say Welding---Think Westinghouse

Mountain Grade Service—Norfolk & Western

Switching Service

Branch Line—Freight Service

High-Speed Passenger Service

Interchange and Car Spotting Service

Baldwin-Westinghouse Electric Locomotives

have established a world-wide reputation for great reliability and low operating cost in every class of railway service throughout the country. The dominant factor back of this splendid performance is—

Experience

Mechanical parts, the result of experience acquired by The Baldwin Locomotive Works in building over 40,000 steam locomotives, over a period of 80 years.

Electrical parts supplied by a company that has furnished the electrical equipment for more steam-road electrification than any other manufacturer in the world—Westinghouse Electric.

Baldwin-Westinghouse Electric Locomotives are built by men who know. That is why the design, construction and performance always consistently embodies—

Quality Founded on Experience

Address either company

The Baldwin Locomotive Works

Philadelphia, Pa.

Westinghouse Electric & Mfg. Co.

East Pittsburgh, Pa.

Tunnel Service

Suburban Terminal Service

Trunk Line Terminal Service

Suburban Freight Service

Trunk Line Service—N. Y., N. H. & H. R. R.

Type CS, Alternating Current Motor

Westinghouse Electric

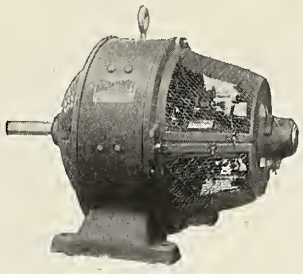

Type SK, Direct Current Motor

Motors and Control

AC Automatic Motor Starter

furnish the most satisfactory and economical drive for your machine tools. Used in all the modern railroad shops.

Send for Booklet "Motor-Driven Machine Tools."

Westinghouse Electric & Mfg. Co.

EAST PITTSBURGH, PA.

Sales Offices in All Large American Cities

DC Automatic Motor Starter

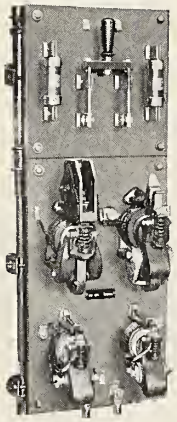

Buffalo Brake Beam Company

OFFICES:
NEW YORK
30 Pine Street
ST. LOUIS
Syndicate Trust Building
MONTREAL QUE.
195 Commissioner Street

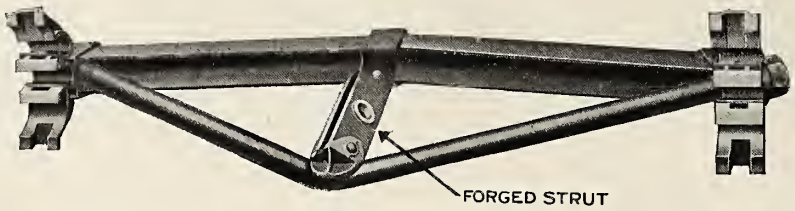

WORKS:
Buffalo, N. Y.
Hamilton, Ont.

BRAKE BEAMS FOR ALL CLASSES OF CARS, LOCOMOTIVES and ELECTRIC EQUIPMENT

The Ohio Injector Company

1437 Monadnock Block, Chicago

Manufacturers of

Ohio Locomotive Injectors
Chicago Non-Lifting Injectors
Chicago Locomotive Lubricators
Chicago Flange Oilers

FOR STEAM AND ELECTRIC SERVICE
SPECIAL REINFORCED BRAKESHOES

Engine Trucks and Tenders

SAFE EFFICIENT ECONOMICAL

AMERICAN BRAKESHOE AND FOUNDRY COMPANY

New York Mahwah, N. J. Chicago

The Improved Combination Brakehead and Shoe
For Locomotive Driving Wheels

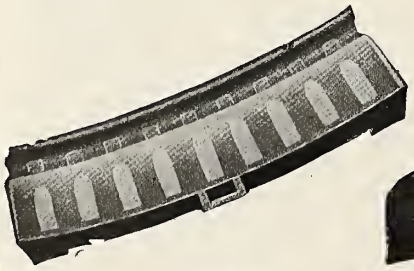

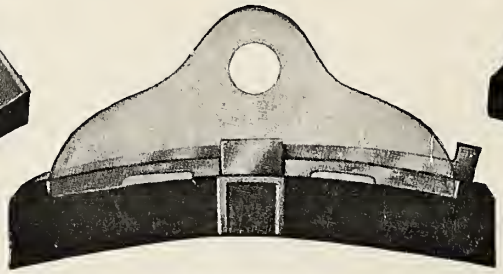

SAFE EFFICIENT ECONOMICAL

Ample Compressor Capacity Reduces Engine Failures

Modern heavy train service requires maximum air compressor capacity. The 8½-inch Cross Compound Compressor, with a displacement capacity of 150 cubic feet of free air per minute, meets the most trying service conditions. This capacity is so ample that overwork, excessive heating, etc., is unnecessary and the compressor remains in service with the locomotive between general shoppings and is taken off for repairs only when the locomotive goes in for general overhauling.

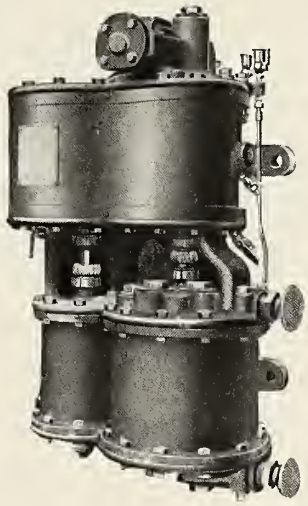

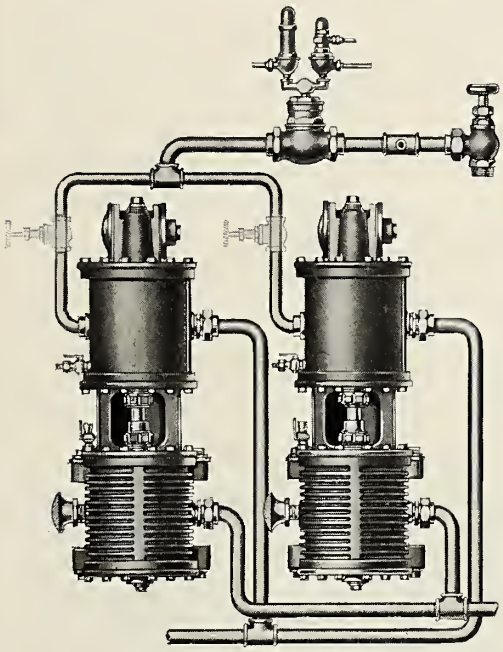

In providing greater air compressor capacity, the older 9½-inch and 11-inch simple types, now installed, one pump per locomotive may be used to advantage in "twin" installations. Vacancies so created may be filled and air pressure supply insured at a more economical cost of production by the substitution of the 8½-inch Cross Compound Compressor. The heavy demands of mountain locomotives, or of any type in very long train service, not infrequently call for "twin" installations of the 8½-inch Cross Compound Compressor.

Ample compressor capacity also assists trains out of yards on time.

TRADE MARK

Westinghouse Air Brake Co.

Wilmerding, Pa.

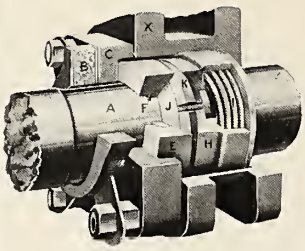

Improved Sullivan Packing

For Piston Rods, Valve Stems and Air Pumps.

The Improved Sullivan Packing is a step in advance over our Edwards Packing, which has given excellent results on heavy superheater locomotives. The advantage of the Sullivan Packing is that the closing effect of the spring and the steam pressure is uniformly distributed throughout the bearing of the packing on the rod, instead of being concentrated at any one point. The packing is kept central and requires less pressure to keep it closed on the rod. This means less friction, less wear and a longer life to the packing.

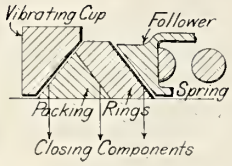

Let us demonstrate this to you.

Government inspection of steam leaks is becoming more rigid. Shift this responsibility onto us—and forget your packing problems?

Jerome-Edwards Metallic Packing Co.

CHICAGO, ILLINOIS

COLUMBIA NUT & BOLT CO., Inc.

Bridgeport, Conn.

Manufacturers of

Columbia Lock Nuts

An absolute tight fastening in itself.

Columbia "Gib" Nut Locks

A "three-thread" fastening for ordinary nuts — as *efficient* and *cheaper* than any of this type on the market.

Simplicity Cotter Keys

Better and cheaper than the "split" riveted keys.

For Economy and Efficiency

use our products.

We are glad to furnish samples for trials.

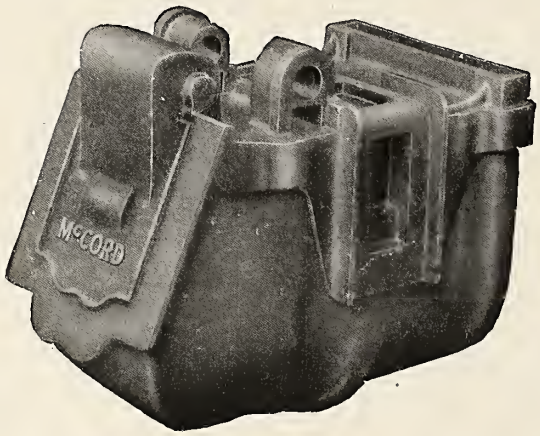

The McCord Steel Journal Box

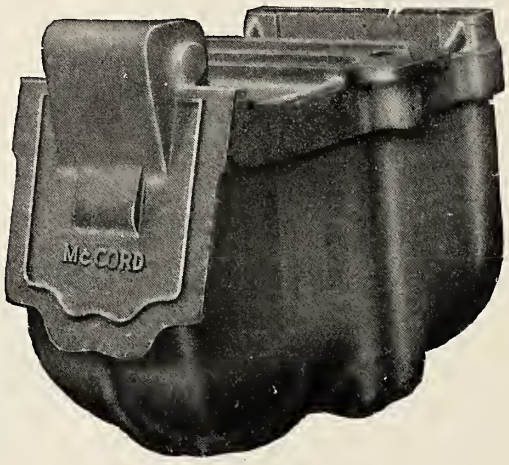

Combines the strength and wear-resisting qualities of cast steel with over 30 per cent. less weight than malleable iron.

McCORD and COMPANY

122 So. Michigan Ave.
Chicago

WORKS
WEST PULLMAN

50 Church Street
New York

The Clasp Brake Delivers Maximum Braking Force, also Reduces Train Delays

Clasp Brake for Six-Wheel Tender Truck (Santa Fe type).

The Superiority of the Clasp Brake over the Single Shoe type makes possible:

Shorter stops, smoother stops and reduced brake shoe wear.

Reduced brake shoe maintenance.

Ample brake shoe clearance, and consequently less train resistance.

More accurate stops, uniform piston travel being insured for all cylinder pressures.

Reduction in wheel sliding, either from shocks or brake shoes failing to release promptly.

Reduction in stuck brakes and reduction in hot boxes.

Handling longer trains with present motive power.

Fewer delays and thus greater dispatch.

Write us for further particulars.

American Brake Company

St. Louis, Mo.

UNION STEEL CASTING CO., Pittsburgh, Pa.

Vanadium Locomotive Frame, Santa-Fe Type, 41'-7" Long

ENGINE FRAMES, WHEEL CENTERS AND MISCELLANEOUS STEEL CASTINGS FOR LOCOMOTIVES

VANADIUM STEEL CASTINGS A SPECIALTY

ROBERT W. HUNT JNO. J. CONE JAS. C. HALLSTED D. W. McNAUGHER

ROBERT W. HUNT & CO., Engineers

BUREAU OF

Inspection Tests and Consultation

INSPECTION OF LOCOMOTIVES AND CARS

INSPECTION OF ALL MATERIALS OF CONSTRUCTION

Resident Inspectors at Manufacturing Centers

Established Offices in { CHICAGO, NEW YORK, PITTSBURGH, ST. LOUIS, LONDON, MONTREAL, SAN FRANCISCO, TORONTO, SEATTLE, VANCOUVER, MEXICO CITY

Saving in Repairs

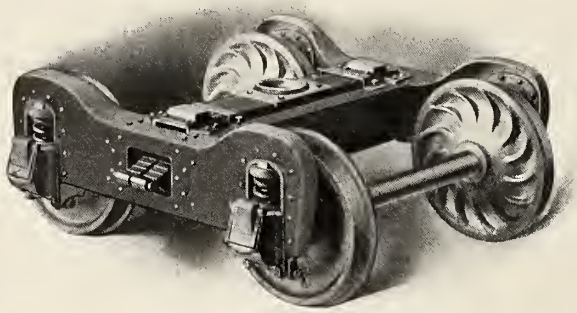

Less Flange Wear of Wheels

PRESSED STEEL TRUCKS

For Freight Cars and Engine Tenders

All Steel **CARS** Composite

FREIGHT AND PASSENGER

PRESSED STEEL CAR COMPANY

New York Pittsburgh Chicago Washington, D. C.

KING TYPE Metallic Packings

For Locomotive Piston Rods, Valve Stems and Air Pumps

LEACH Track Sander
GOLLMAR Bell Ringer
INDESTRUCTIBLE Oil Cup, etc.

THE U. S. METALLIC PACKING COMPANY

Philadelphia

The MASON

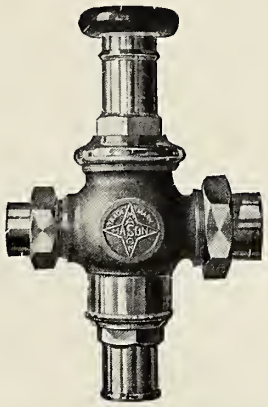

Locomotive Reducing Valve

for car heating service

STANDARD OF THE WORLD

Mason Regulator Co.

Boston, Mass., U. S. A.

Commonwealth Devices

(Patented)

Steel Underframe for Passenger-Train Cars.

Platform Integral with Double Body Bolster

Upright End-Frame for Passenger-Train Cars

Double Body Bolster for Passenger-Train Cars

Four-Wheel Passenger Truck

Six-Wheel Passenger Truck

Double Truck Center Bolster

Adjustable Chafing Plate for Passenger Trucks

End Sill for Passenger Cars

Needle Beams for Passenger and Freight Cars

Commonwealth Transom Draft Gear for Freight Cars

Separable Body Bolster for Freight Cars

Flory Carry Iron and Striking Plate

Tender Trucks

Engine Trucks

Pilot Beams and Tender Bumpers

K. W. Trailer Trucks

One-Piece Tender Frame

Cast Steel Pilots

And Other Excellent Devices

COMMONWEALTH STEEL COMPANY

St Louis, Mo.

Why Charcoal Iron Boiler Tubes

A cold blast of air directed on a hearth charged with charcoal and iron ore produced the first iron. This iron was practically pure. The same process, although the charge has varied, is followed today by the

PARKESBURG IRON COMPANY

The result is the same high grade iron as of old. For boiler tubes this iron is ideal. It is fibrous, will not crystallize under shock or vibration, is ductile, can be easily and securely beaded, requires little calking and is pre-eminently weldable. Charcoal Iron is non-corrosive, and resists pitting.

Boiler Tubes of charcoal iron are more dependable and durable than steel, while the ultimate cost is much less.

Let us send you specifications and service records.

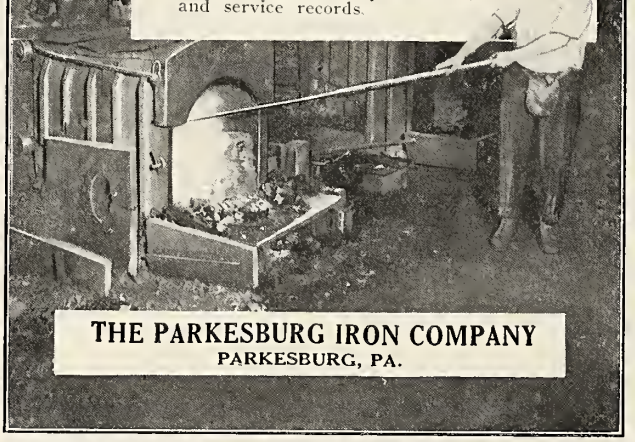

THE PARKESBURG IRON COMPANY
PARKESBURG, PA.

Simple in construction. **Efficient** in operation. **Prompt** in movement.

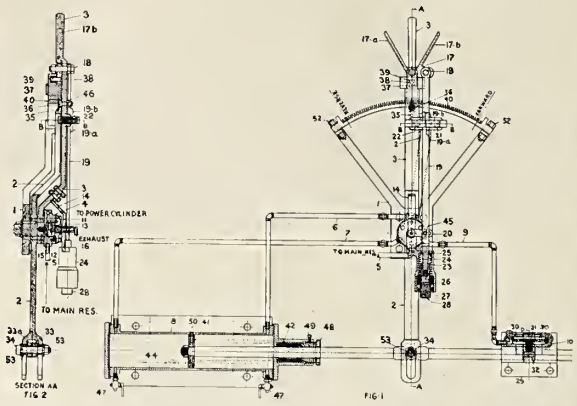

ECONOMICAL in maintenance. **POSITIVE** in automatic lock.

Uses air and steam interchangeably. Does not waste fluid pressure. Easily moved from notch to notch, or from corner to corner at any speed.

Can instantly be converted into manually operative gear.

Cannot change position
Cannot kick

Detailed information and price upon request

Pittsburgh Locomotive Power Reverse Gear Company
309 Carson Street S. S. Pittsburgh, Pa.

HUNT-SPILLER GUN IRON

USED BY LEADING RAILROADS

FOR

PISTON VALVE PACKING RINGS
CYLINDER PACKING RINGS
PISTON VALVE BUSHINGS
CYLINDER BUSHINGS

AND OTHER

LOCOMOTIVE CASTINGS

MADE ONLY BY

HUNT-SPILLER MANFG. CORPORATION

W. B. LEACH, Pres. and Gen'l Mangr.

Office and Works:
383 Dorchester Avenue,
So. Boston, Mass.

J. G. PLATT,
Sales Manager

Creco Brake Beam

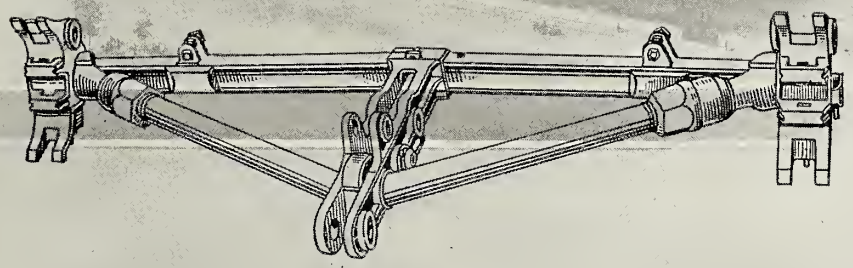

Back of and behind the Creco, a brake beam of the highest type of construction, stand the plants — the organization of the Chicago Railway Equipment Company, building the brake beam complete from the raw material to the finished product — with a record of over six million brake beams sold to the most discriminating and careful buyers; a record unequalled in the annals of brake beam construction. Today, as always, the pioneers and originators in all that is best in brake beam building, stands the

CHICAGO RAILWAY EQUIPMENT COMPANY

The World's Brake Beam Builders

The Everlasting Valve

The Ideal valve for locomotive blow-off service.

Exclusively used on 39 of the leading railroads and over 200 of the smaller ones.

Guaranteed drop tight for two years or money refunded. No stuffing-box. No packing. 250-lb. steam pressure. Self-cleaning and self-grinding seat.

Made with screwed ends, flanged ends or angled ends.

Also specially arranged for boiler washout system and round-house installation.

Will send on free trial. Write for full information and booklet.

Scully Steel & Iron Co.
Chicago, Ill.

CHAMBERSBURG

STEAM HAMMERS—HYDRAULIC MACHINERY

All sizes and types for every service

Send for Hammer Catalog No. 66

CHAMBERSBURG ENGINEERING COMPANY

Chambersburg, Penna., U. S. A.

MALLEABLE IRON AND STEEL CASTINGS

FOR RAILWAY EQUIPMENT

SHARON TOP, BOTTOM AND SIDE OPERATING ENGINE, TENDER, FREIGHT AND PASSENGER COUPLERS HAVE THEIR LOCKS, KNUCKLES AND KNUCKLE PINS INTERCHANGEABLE

SHARON ENGINE

ENGINE COUPLER POCKETS
KEY BOLT PINS
NATIONAL SAFETY UNCOUPLING ROD CLEVIS AND PIN
NATIONAL EQUALIZING WEDGES
NATIONAL DEAD LEVER GUIDES
NATIONAL BRAKE JAWS
NATIONAL CAR DOOR FASTENERS
GOODMAN WRECKING HOOKS
UNCOUPLING ROD CLEVISES AND CHAINS
STAKE AND PUSH POLE POCKETS

TENDER COUPLER POCKETS
BRAKE SHOE KEYS
NATIONAL SAFETY BRAKE LEVERS
NATIONAL BRAKE BEAM FULCRUMS
NATIONAL QUADRUPLE SHEAR YOKES
NATIONAL RIBBED WASHERS
NATIONAL BURGLAR-PROOF CAR DOOR BRACKET
MALLEABLE IRON WASHERS
UNCOUPLING ROD BRACKETS
CYLINDER PUSH RODS

COUPLER AND

TRUCK CORNER PLATES
BRAKE LEVER PINS
FLOATING LEVER BRACKETS
AIR AND STEAM HOSE NIPPLES AND CLAMPS
TRUSS ROD WASHERS
PLAIN AND SPOOL WASHERS
CAR DOOR HINGES, HANGERS AND GUIDES
SQUARE AND ROUND SHAFT HAND BRAKE MECHANISMS

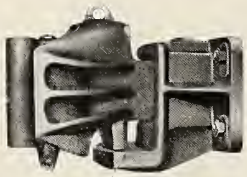

EXTENDED FLOOR

EXTENDED FLOOR

TRUCK LEVER CONNECTIONS
FINGER GUARDS
BRAKE LEVER FULCRUMS
TRAIN PIPE CLAMPS AND HANGERS
ANGLE WASHERS
FLOOR SOCKET AND NUT WASHERS
CAR DOOR HANDLES, STOPS AND FITTINGS
FORSYTH HAND AND RUBBLE CAR WHEELS

POCKET

LOCOMOTIVE COAL PICKS
RAIL ANCHORS, BRACES AND CLIPS

FIRE SHOVELS
TIE PLATES, TRACK GAGES

CLIMAX, LATROBE AND TOWER COUPLERS
NATIONAL COILED SPRING JOURNAL BOXES

THE NATIONAL MALLEABLE CASTINGS CO

Cleveland — Chicago — Sharon, Pa. — Indianapolis — Melrose Park, Ill. — Toledo

Additional Sales Offices in New York, Philadelphia, Washington, St. Louis, St. Paul, San Francisco

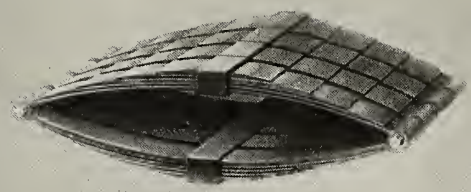

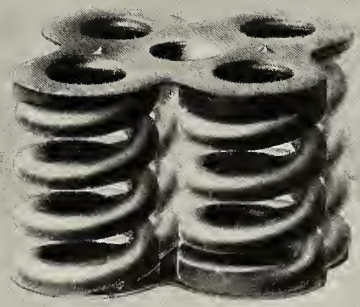

RAILWAY STEEL-SPRING COMPANY

GENERAL OFFICES
30 Church St., New York.

BRANCHES

Chicago
Denver
Detroit
Louisville
Mexico City
St. Louis
St. Paul
Norfolk
New Orleans

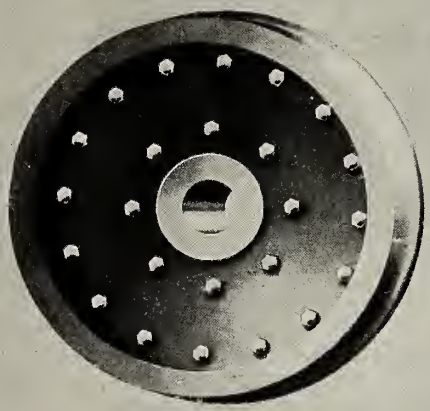

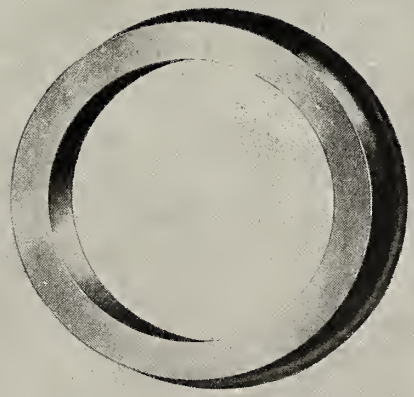

THE LANDIS DIE

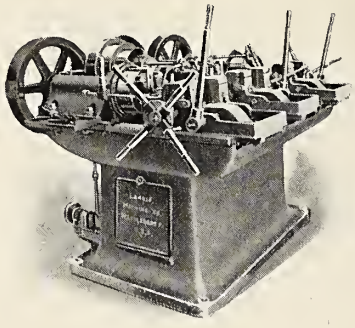

is the acknowledged standard for bolt and pipe threading. Its success in these fields is due to the great life of the chasers, the interchangeability of the chasers, the variable rake angle and the permanent throat.

The chasers are made of a self-hardening steel and require no annealing, hobbing or retempering. They may be used for both right and left hand threading by grinding cutting edges at the two ends and using right or left hand chaser holders as desired.

Write for catalogue.

LANDIS MACHINE CO., Inc.

WAYNESBORO, PENNA.

Everything in—

Iron — Steel — Machinery

Lathes	Expanders	Bars	Bolts
Planers	Tube Cutters	Shapes	Tubes
Shapers	Power Hammers	Plates	Nuts
Punches	Flue Shop Machinery	Sheets	Boiler Specialties
Shears	Spring Shop Machinery	Rivets	Ulster Iron
Grinders	High Speed Friction Saws	Spikes	Nikrome Axle Steel
Keyseaters	Cylinder Boring Bars		Ulster Special Staybolt Iron

JOSEPH T. RYERSON & SON

NEW YORK CHICAGO ST. LOUIS

P. & W. SMALL TOOLS

Stand Up Under the Hard Service of Locomotive Shops

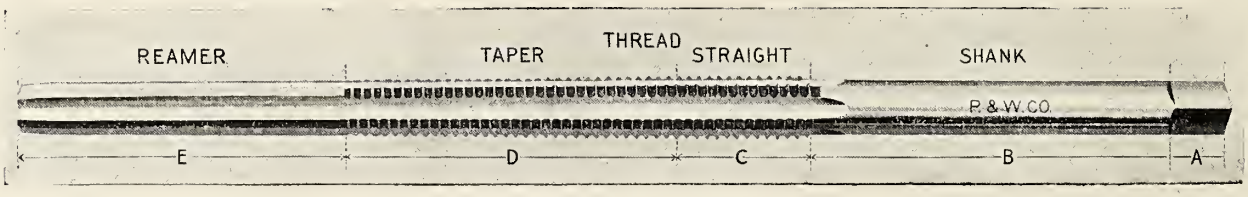

Staybolt Taps

Our line includes a large number of tools especially adapted for locomotive and railway repair shop work—Staybolt taps (standard, spindle and flexible), straight and taper boiler taps, patch bolt taps, mud and washout taps, locomotive taper reamers, flexible staybolt reamers, Renshaw ratchet drills, punches and couplings, heavy duty milling cutters; also a complete line of standard taps, dies, reamers, milling cutters, drills, etc.

M. C. B. & M. M. Gauges

Our line of M. C. B. & M. M. Standard Gauges are made strictly up-to-date; any authorized changes are at once incorporated in their design.

Write for catalogs "Small Tools" and "Gauges and Standards."

PRATT & WHITNEY CO. **HARTFORD, CONN.**

OFFICES AND AGENCIES CARRYING P. & W. SMALL TOOLS IN STOCK:

NEW YORK.....326 Hudson St.
BOSTON..... 93-95 Oliver St.
PHILADELPHIA.... 405 N. 21st St.
CLEVELAND.....Rockefeller Bldg.
DETROIT.....Kerr Mchy. Co.

CHICAGO
Washington and Jefferson Sts.
ST. LOUIS.....516 North 3rd St.
CINCINNATI.....336 W. Fourth St.
BIRMINGHAM, ALA..2015 First Ave.
ST. PAUL, MINN.,
Robinson, Cary & Sands Co.

DENVER, COLO.,
Hendrie & Bolthoff Mfg. & Supply Co.
SAN FRANCISCO..16-18 Fremont St.
SEATTLE, WASH.,
Hallidie Machinery Co.

Maximum Output

MACHINE TOOLS

For Locomotive Manufacturing and Repair Shops

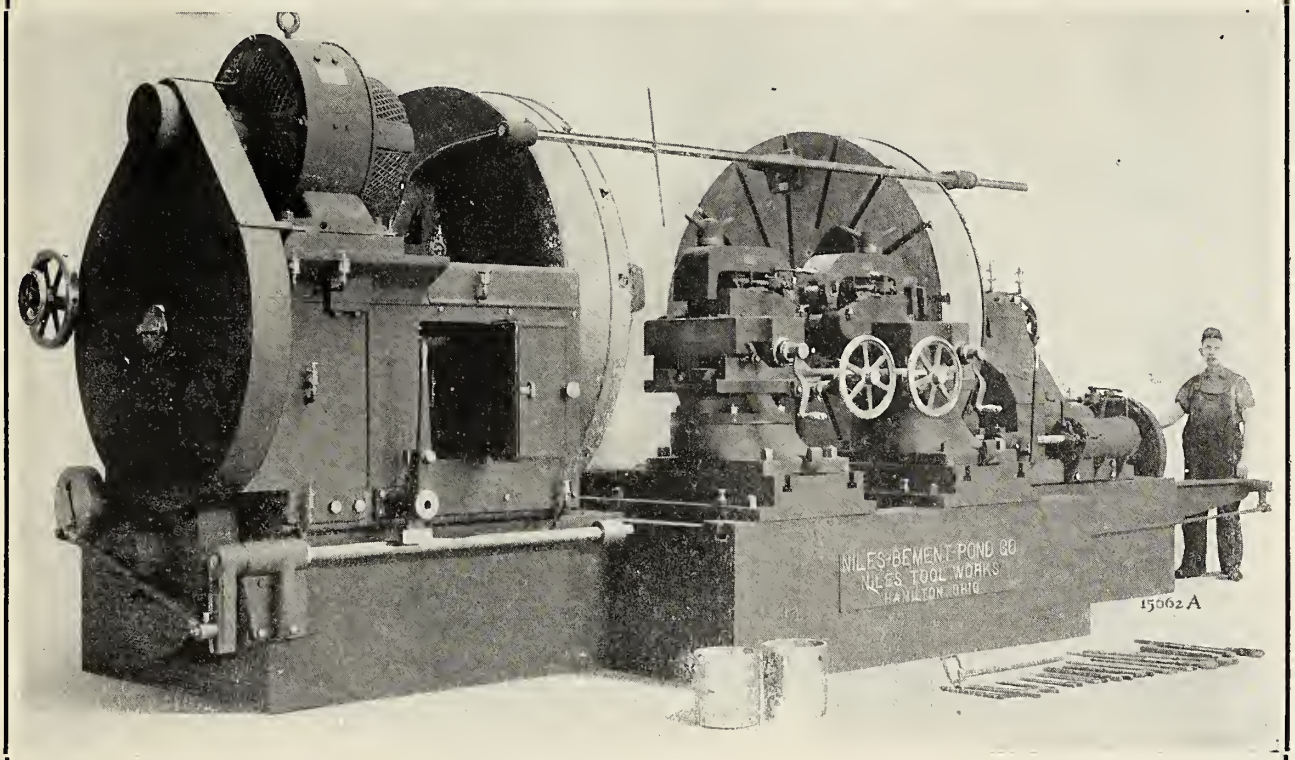

90 Inch Driving Wheel Lathe

Heavy Patttern

Designed for turning driving wheels in the shortest time. This is made possible by our many time and labor-saving devices, among which are pneumatic tool clamps, power traverse and pneumatic clamp for right hand headstock, calipering attachment, push button control, "Sure Grip" drivers, etc.

We Also Build

- Driving Wheel Lathes (51" to 90")
- Axle Lathes
- Axle Centering Machines
- Axle Cutting-off and Centering Machines
- Hydraulic Wheel Presses
- Wheel Quartering Machines.
- Standard Planers
- Frame Planers
- Plate Planers
- Rod Milling Machines
- Vertical Milling Machines
- Tire Boring Mills
- Standard Boring and Turning Mills
- Steam Hammers
- Crank Slotters
- Frame Slotters
- Frame Drilling Machines
- Multiple Spindle Drilling Machines
- Mud Ring and Flue Sheet Drilling Machines
- Arch Bar Drilling Machines
- Rod Boring and Drilling Machines
- Horizontal Boring and Drilling Machines
- Cylinder Boring Machines
- Bending and Straightening Rolls, etc.
- Electric Traveling Cranes

We shall be pleased to send catalogs or circulars and furnish any desired information on machines in which you are interested.

Niles-Bement-Pond Co., 111 Broadway, New York City, 25 Victoria St., London, S.W.

SALES OFFICES AND AGENCIES—Boston: 93-95 Oliver St. **Philadelphia:** 405 N. 21st St. **Pittsburgh:** Frick Bldg. **Cleveland, O.:** The Niles Tool Works Co., Rockefeller Bldg. **Hamilton, O.:** The Niles Tool Works Co. **Cincinnati:** 336 West 4th St. **Detroit:** Kerr Machinery Bldg. **Chicago:** Washington & Jefferson Sts. **St. Louis:** 516 North Third St. **Birmingham, Ala.:** 2015 First Ave. **San Francisco:** 16 and 18 Fremont St. **For Colorado, Utah, Wyoming and New Mexico:** Hendrie & Bolthoff Manufacturing & Supply Co., Denver. **Seattle, Wash.:** Hallidie Machinery Co. **For Canada:** The John Bertram & Sons Co., Ltd., Dundas, Montreal, Winnipeg, Vancouver. **Japan:** The F. W. Horne Co., 6 Takiyama-cho Kyobashi-ku, Tokio. **Italy:** Ing. Ercole Vaghi, Milan. **France:** Glaenzer & Perreaud, 18 Faubourg du Temple, Paris. **Germany:** F. G. Kretschmer & Co., Frankfurt, a.M. **Austria-Hungary:** E. Krause & Co., Vienna, Prague and Budapest. **Holland:** R. S. Stokvis & Zonen, Ltd., Rotterdam. **For Mexico:** The Railway Supply Co., S. A. Cinco de Mayo, 6, Mexico City. **Russia:** S. G. Martin & Co., Ltd., Petrograd and Moscow. **Brazil:** Comptoir Technique Breselien, P. O. Box 802, Rio de Janeiro.

HYDRAULIC MACHINERY

All Kinds—Dependable—Best Quality

Engineers of 60 years' experience building hydraulic machinery. It will pay you to consult us before buying elsewhere.

Write for Catalogs

The Watson-Stillman Co.

188 Fulton Street New York

Chicago, McCormick Building

262

Hydraulic Wrecking Jack

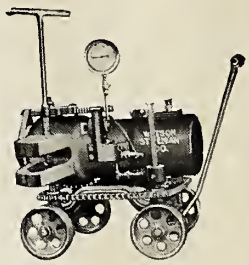

Hydraulic Crank Pin Press

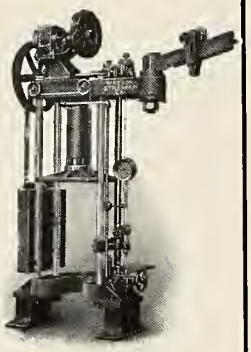

Locomotive Box Forcing Press

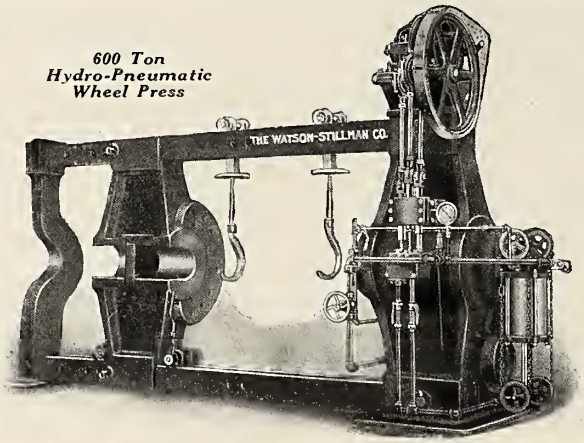

600 Ton Hydro-Pneumatic Wheel Press

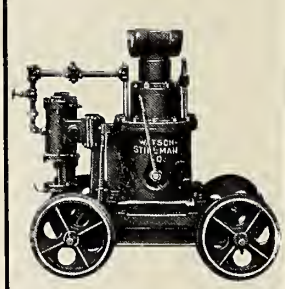

Hydro-Pneumatic Pit Jack

The publishers of the Locomotive Dictionary publish also four of the best edited, best printed and most intensively circulated technical papers in the world. They are

Railway Age Gazette

Weekly: Read by Chairmen, Presidents, Vice-Presidents and other executive and general officers, Purchasing Officers and Storekeepers, Traffic Officers, General Managers, General Superintendents, Superintendents and other operating officers, Engineering and Maintenance of Way Department Officers, and higher Mechanical Department officers. Subscription price, North America, $5.00 a year; foreign countries, $8.00 a year.

Railway Mechanical Engineer

Monthly: Read by Superintendents of Motive Power, Mechanical Engineers, Engineers of Tests, Master Car Builders, Master Mechanics, Shop Superintendents, Road Foremen of Engines, Engine House Foremen, and Foremen of all departments of locomotive and car repair shops and yards. Subscription price, North America, $2.00 a year; foreign countries, $3.00 a year.

Railway Electrical Engineer

Monthly: Read by Railway Electrical Engineers, Chief Electricians, Electrical Foremen of Shops, Coach Yards, Terminals, Electrified Zones, etc.; Inspectors of Electrical Equipment, Car Lighting Batterymen, Electricians, Repairmen, Draftsmen, Telegraph Superintendents. Subscription price, North America, $1.00 a year; foreign countries, $1.50 a year.

Railway Signal Engineer

Monthly: Read by Signal Engineers, Signal Supervisors, Inspectors, Maintainers, Foremen, Repairmen, Batterymen, Electricians, Wiremen, Machinists, Helpers, Fitters, Apprentices, Signal Draftsmen, Towermen, Lampmen. Subscription price, North America, $1.00 a year; foreign countries, $1.50 a year.

Simmons-Boardman Publishing Company

NEW YORK
Woolworth Building

CHICAGO
Transportation Building

CLEVELAND
Citizens Building

MANNING MAXWELL & MOORE, INC.

LARGEST MANUFACTURERS AND DISTRIBUTORS OF LABOR-SAVING DEVICES IN THE WORLD

EVERYTHING FOR THE LOCOMOTIVE AND RAILROAD MACHINE SHOPS

LOCOMOTIVE AND RAILWAY SUPPLIES OF EVERY DESCRIPTION

SEE FIGURES 2428 and 2527.

OWNING AND OPERATING

PUTNAM MACHINE COMPANY

Coach Wheel Lathes
Driving Wheel Lathes
Hydraulic Wheel Presses
Car Wheel Borers
Single and Double Axle Lathes
Engine Lathes
Frog and Switch Planers

SEE FIGURES 2372, 2446, 2447, 2450, 2464.

THE SHAW ELECTRIC CRANE CO.

Electric Traveling Cranes
Hand Power Traveling Cranes
Electric Traveling Monorail Hoists

THE CONSOLIDATED SAFETY VALVE CO.

Locomotive Pop Safety Valves—Muffled and Encased

SEE FIGURES 349, 350 and 351: ALSO TABLE OF CAPACITIES, PAGE 295

THE HANCOCK INSPIRATOR CO.

Non-Lifting Locomotive Inspirators
Composite Type Locomotive Inspirators
Check Valves
Locomotive Hose Strainers
Operating Cylinder for Cylinder Cocks
Boiler Tester, Filler and Washer
Lifting Types Locomotive Inspirators
Main Steam Valves
Combined Stop and Check Valves
Blow-Off Valves
Pneumatic Cylinder Cocks
Locomotive Specialties of Every Description

SEE FIGURES 636, 637, 638, 1190, 1209, 1220, 1340, 1341, 1342, 1343, 1344, 1345, 1374, 1375, 1376, 1377, 1379, 1384.

THE ASHCROFT MANUFACTURING CO.

Locomotive Steam Gauges
Duplex Air Brake Gauges
Gauge Glass Protectors
Locomotive Steam Heat Gauges
Prismatic Water Gauges
Portable Locomotive Gauge Testers

SEE FIGURE 1186.

THE HAYDEN & DERBY MANUFACTURING CO.

Metropolitan Locomotive Injectors. H-D Ejectors

119 West 40th Street, New York

BRANCHES

BOSTON.....Oliver Building
BUFFALO.....White Building
CHICAGO...111-115 North Canal St.
CLEVELAND.....Leader News Bldg.
CINCINNATI,
First National Bank Building
DETROIT.....Majestic Building
MILWAUKEE.....P. O. Box 678
NEW HAVEN.....P. O. Box 1252
PHILADELPHIA....Lincoln Building
PITTSBURGH.....Park Building
ST. LOUIS,
Railway Exchange Building
SAN FRANCISCO..Monadnock Bldg.
SEATTLE.....Mutual Life Building
YOKOHAMA, JAPAN

SMITHSONIAN INSTITUTION LIBRARIES
3 9088 01247 3153